CADILLAC MOTOR CAR COMPANY
1923
c.1

THE NEW CADILLAC

Details of Construction

Library
General Motors Corporation
Research
Laboratories

LIBRARY REFERENCE COPY
NOT TO CIRCULATE

CA
28
EF

THE NEW
CADILLAC



Details of Construction

CADILLAC MOTOR CAR COMPANY
DETROIT

THE NEW CADILLAC

Details of Construction

The New Cadillac marks the greatest advance in design, distinction, luxury and performance of any car produced by the Cadillac Motor Car Company in its twenty-five years of fine motor car manufacture.

The motoring public has always looked to Cadillac for a standard by which fine cars can be judged, and this season it finds in the New Cadillac an automobile surpassing to such a degree other cars in the most exclusive class, that it stands entirely in a sphere by itself.

Judged from the standpoint of automobile values—on the points of distinction, luxury, individuality, riding qualities, dependability and all-around performance—the claim of the New Cadillac to undisputed preëminence is readily apparent.

For this New Cadillac brings to a brilliant climax the company's quarter century of leadership in the fine car field, is the logical and to-be-expected result of that leadership and is a car that only Cadillac could create and produce.

It reflects the careful, painstaking study and analysis of what buyers of fine cars want. And it incorporates in all major and minor details those features which careful research and long experience have revealed not only as desirable but also as necessary for the increasingly exacting demands of purchasers of fine cars.

Comparison of the New Cadillac, with other cars in the fine car class will enable a just conception to be formed of the fundamental reasons for Cadillac's leadership, and why, as each successive model is introduced, Cadillac becomes more soundly established as Standard of the World.

When Cadillac engineers and body designers first concentrated on the

n of the New Cadillac they began with the decision not to compromise
ıe past. The lines of previous Cadillacs were not to be worked over
view to designing a new model. What was sought was a New Cadillac.
e it is that they had for a background Cadillac's enviable history of
-five years' experience of fine automobile building, and the inspira-
ideals that have always maintained craftsmanship as a creed. But
ıjective was a car not to be compared with any previous Cadillac save
fundamental engineering principles which outstanding performance
ırs of constant use had proved to be basically and inherently correct.
t, the objectives to be attained were determined—then a New Cadillac
ated in accordance with these findings.

markedly modernistic trend of body design, which now is distinctly
ue, was taken into consideration. Every detail conducive to added
ıleasure, luxury and comfort such as springing, roominess, exclusive
re, trim and appointments was given earnest thought with the object
ıcing a car possessing features of especial appeal to men and women
iminating taste.

result is the New Cadillac—the largest, most luxurious and most
ıl car that Cadillac has ever produced; a car that definitely estab-
ew and still higher standards of comfort, performance, luxury and
ion.

; has been accomplished by a series of factors for which Cadillac is
ımed—correct design; finest quality materials; skilled craftsmanship;
ıurces of the Research Laboratories and Proving Ground of the
Motors Corporation and, most important factor of all, the rich
ıce Cadillac has gained through twenty-five years building fine auto-
, and fourteen years of strict concentration on one type of engine
Thus does the New Cadillac profit by the heritage of all the quarter
lion ninety-degree, V-type, eight-cylinder Cadillacs that have pre-
.

ible to a remarkable degree, with surging power at the touch of the
; vibrationless at all speeds; with a spring suspension and long wheel-
ıt result in easy riding qualities beyond belief, and possessing the

dependability which is practically synonymous with the word Cadillac. the new creation is truly a masterpiece of automobile engineering construction.

Combined with this perfected mechanism is a line of body designs equally outstanding and entirely individual in the realm of coachbuilding art.

Extremely graceful, long, low-slung lines are achieved by a body $2^{3}/_{4}$ inches lower to the ground than the previous year's design, and by a 140-inch wheelbase which permits of genuine balance, harmony, and proportion.

Cadillac body designers have realized the public demand for a really low-slung car—a demand arising not alone through the dictates of fashion but also because a low center of gravity gives excellent stability and an added sense of security—and have achieved a series of models of distinction and luxury unapproached before.

In the following pages are illustrated and described some of the outstanding mechanical features, refinements and details of body construction of the New Cadillac.

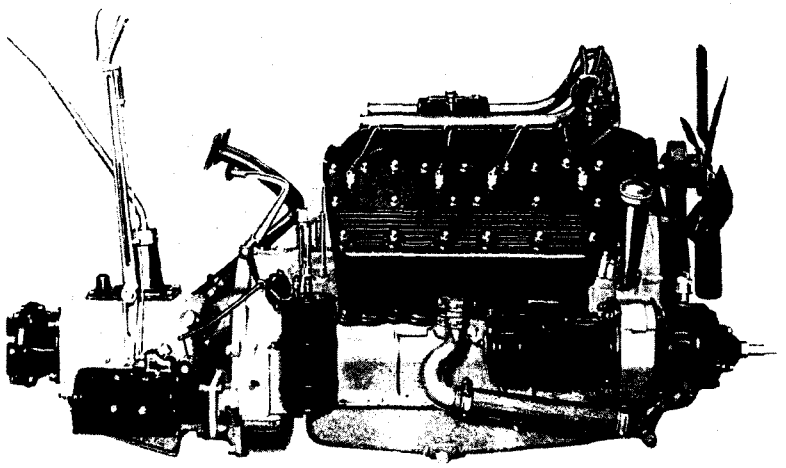

A Surpassing Power Plant

cest interpretation of the famous 90-degree, V-type, eight-cylinder engine powers the new Cadillac. l, refined, simplified, more than master of its job. it is a consummate example of advanced engineering and modern craftsmanship

PART I

DETAILS OF CONSTRUCTION

The Engine

The famous ninety-degree, V-type, eight-cylinder Cadillac engine is the ·stone on which has been built Cadillac's edifice of success in the eight-er field.

is Cadillac engine has a unique record in automobile engineering for it › fundamentally right in theory and in practice that Cadillac engineers ıever been compelled to depart from the original basic design in order fect performance.

As a result, ever since its introduction, Cadillac has been able to concentrate on one type of engine, although during this time the history of the automobile industry has been one of constant experiments with various types of engines.

Cadillac engineers, therefore, have been enabled to devote their full energy to constant refinements and improvements with the result that today the Cadillac ninety-degree, V-type Eight is now more emphatically than ever, the finest power plant ever designed for fine car performance.

Chief among the improvements that have added yet more to the remarkable performance and dependability of this great engine was the compensated crankshaft, introduced in 1923.

This feature, by eliminating vibration at its source, was as epochal in its way as was the first eight-cylinder Cadillac engine designed. Like the original Cadillac eight-cylinder engine itself, this development was one of the most important contributions ever made to automotive engineering, for it solved a problem which engineers had been wrestling with for years.

The most convincing evidence of the way in which the Cadillac engine has met the steadily increasing demands for better performance, more dependability and greater freedom from trouble, is the emphatic stamp of endorsement motordom has given it. During the years since its introduction the sale of Cadillac eight-cylinder cars has exceeded the combined sales of all other cars at its price or above. And this is in spite of the fact that in the last few years the production of eight-cylinder cars has very greatly increased.

This engine—with its enviable record of success; endorsed by a discriminating market in a way no other fine car has ever been endorsed; refined and improved through nearly a decade and a half of constant development—finds its fullest and ripest expression of efficiency, power, performance and dependability in the New Cadillac.

Among the many advantages which result from this famous Cadillac principle of engine design are the following:

1. *Frequent, even and overlapping impulses.*

Frequent power strokes and overlapping power impulses equally spaced.

, smooth velvety flow of power. For approximately fifty per cent of me, two or more cylinders are delivering power to the crankshaft aneously.

ıe resultant flow of power is satisfactory for slow speed requirements of affic obviating constant gear shifting, and is transformed into a surge er by a mere touch of the accelerator. This great flexibility and even is a striking feature of Cadillac performance.

mpactness.

cause there are two cylinder blocks, of four cylinders each, placed op- to one another rather than end to end, the engine is very short and ıely rigid.

e chief advantages of this construction are a short and sturdy crank- ınd the reduction of vibration to an absolute minimum. Furthermore, se of the short crankshaft, three main bearings are amply sufficient to le an abundance of support. In addition, this results, also, in simplicity gh the reduction of parts. A still further benefit of this compactness is weight per horsepower.

mplicity.

ıcing the two cylinder blocks within a narrow compass makes possible ly efficient and simplified system of cooling, carburetion, fuel distribu- ınd lubrication. The short crankshaft, camshaft and crankcase are r benefits of the fundamental simplicity of this engine.

ng life.

edom from trouble and dependability are dominant characteristics gine wear is reduced to a minimum.

w rate of wear and tear is assured because all the power impulses are and each one less severe than in other engine types, and because re- ıting parts are lighter and therefore set up slighter inertia forces.

ENGINE SIZE AND POWER

e New Cadillac engine has a piston displacement of 341 cubic inches. ore is $3\frac{5}{16}$ inches and the stroke $4\frac{15}{16}$ inches.

The S.A.E. horsepower is 35.1 but the actual power output is 90 horsepower.

THE CADILLAC BALANCED COMPENSATED CRANKSHAFT

When in 1923, after years of research, there was discovered the principle upon which is based the design of the Cadillac compensated crankshaft, there was aroused a new conception of fine motor car performance and there dawned a new era in Cadillac's already brilliant history of engine achievement.

The compensated crankshaft is one of the greatest factors contributing to the Cadillac perfect engine performance. By the system of balancing and compensating, any period of vibration which might tend to start at any speed of the crankshaft is immediately smoothed out. The result is an even flow of perfectly smooth power throughout the whole range of speed.

The crankshaft has four throws, or cranks, in two planes at right angles to each other, rather than all in one plane, as in other types of V-eights.

Four compensators, of forged steel, are secured to the crankshaft. In manufacturing the Cadillac crankshaft, each crankshaft, with its compensating weights, is balanced on a special machine so that the entire reciprocating and centrifugal mass is perfectly balanced at all engine speeds.

The weights of the compensators are so calculated that their centrifugal effect causes the whole assembly—crankshaft, connecting rods and pistons—to operate with the smoothness of a balanced flywheel.

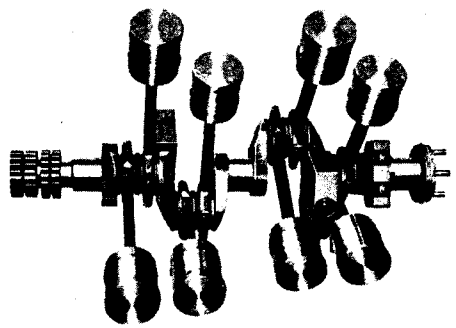

The ultimate secret of Cadillac's surpassing smoothness lies in this compensated and balanced crankshaft. At high speed or low, this entire reciprocating and centrifugal mass is as perfectly balanced as the finest flywheel

RIGIDITY OF CRANKSHAFT

Among the forces acting on the crankshaft of an automobile engine are ional forces, tending to twist the shaft. This tendency is obviously more ked in a long shaft than in a short one. Because of this inherent defect, illac engineers have never approved of a long crankshaft. Even with its eme shortness, the Cadillac crankshaft has the large diameter of 2⅜ es. This gives the crankshaft a great degree of rigidity.

BEARINGS

Three main bearings support the crankshaft. A smaller number of long ings is preferable to a larger number of short ones for two reasons. First, tive lubrication over the entire bearing surface is assured. Second, the ings are more easily aligned and the load equally distributed among ı. Also, much less time is required for adjusting bearings.

Although the compensated crankshaft of the Cadillac engine relieves the ings of all duty except loads due to weight of parts and the power im- es, other forces being completely neutralized, the bearings are of large neter and of ample length.

CONNECTING RODS

A feature new to the Cadillac engine and responsible for a higher degree gine efficiency is the mounting of the connecting rods to the crankshaft. Rods from the opposite cylinders are placed side by side, on the same k throw. The connecting rods which are of I-beam section, are of drop- d alloy steel.

PISTONS

Cast-iron has proved itself to be the best material for the manufacture of ns, since the cylinder blocks are also made of cast-iron.

For cylinder blocks and pistons have the same ratio of expansion and con- ion and it is therefore possible to fit the pistons sufficiently close to give moothest operation and maximum efficiency at all times.

The pistons employed in the Cadillac engine are of nickel-iron of special ula, of close grain and great durability.

Three piston rings are used, two above the wrist pin and one below. The

lowest ring is of the slotted type enabling excess oil to drain back through the piston into the crankcase.

CRANKCASE

Strength, rigidity and stability combined with light weight are outstanding features of the crankcase. The material employed is a special copper alloy aluminum, with a strength-to-weight ratio more than twice that of an iron casting. A great deal of effort has been expended in developing a case which is not resonant. This, coupled with extreme rigidity in both the horizontal and vertical planes, gives freedom from rumbles and vibration.

The walls of the crankcase are adequately reinforced by ribbing, and support the crankshaft and camshaft bearings.

CYLINDER BLOCKS

The Cadillac cylinders are cast en bloc, in fours, with detachable heads. Cylinders are set slightly staggered to permit use of side-by-side connecting rods. Both inlet and exhaust valves are on the same side of the combustion chamber.

A gray cast-iron alloy, of Cadillac special formula, used in the cylinder blocks, gives them exceptional wearing qualities and facilitates the formation of a glass-like surface on the walls of the bore which is produced by honing.

DETACHABLE HEADS

The cylinder blocks have detachable heads to facilitate servicing. Casting of the cylinder heads separately renders it possible in manufacturing to have access to both ends of the cylinder bore, permitting more accurate machining and inspection.

VALVE MECHANISM

The Cadillac eight-cylinder, V-type Eight design permits a simple and unusually quiet valve mechanism. The single camshaft, supported on four bearings, has sixteen cams, each operating one of the sixteen valves. It is positioned directly above the crankshaft, and driven from it by a silent chain of unusual width and strength.

The camshaft is a drop forging with integral cams, and has four bearings. To convey a supply of lubricant to its bearings the shaft is hollowed through

ntire length. Each valve is actuated by a cam slide carrying a hardened roller, which rides upon the cam.

The cam slides operate in bushings assembled to the crankcase in groups ur. These bushings are very accurately machined and aligned, and have nsions whose limits vary by no more than .0005 of an inch. The cam s, which operate the valves, have easily manipulated adjustment screws.

The Cadillac poppet valves are forged from high quality special steel. valves are tungsten steel and exhaust valves are silico-chrome steel. The clear diameter of the valve is approximately $1\frac{1}{2}$ inch. The valve s have their bearings in guides $3\frac{1}{16}$ inches long pressed into the cylinder cs. This length prohibits the possibility of wear. The valve lift is $\frac{23}{64}$ inch. The exhaust valve seats are at an angle of 45 degrees. The inlet valve are at an angle of 30 degrees in order to give freer passage to the s when the valves are opened.

CHAIN MECHANISM

ilent timing chains are used. They have the advantage of being quieter gears, and of retaining this quietness throughout their life.

A large sprocket is keyed directly to the camshaft and is driven from the crankshaft sprocket by a silent chain, while another silent chain, from a second crankshaft sprocket, drives the water pump and generator.

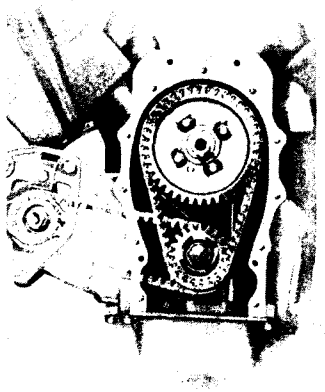

lent chains assure quiet, positive drive of mshaft, generator, and water pump

EXHAUST MANIFOLDS

The two cylinder blocks have separate exhaust manifolds, the front ends of which join a common manifold connected to a pipe passing down between the engine and the frame. The exhaust pipe is thus kept as far as possible from the floor boards, to insure a cool driving compartment in summer. A tail

pipe from the muffler carries the exhaust gases to the extreme rear of the chassis, making for unusually quiet operation.

SUSPENSION

Cadillac employs three-point engine suspension. Rubber lined mountings are used to support the engine at the two points at the rear of crankcase and a ball-and-socket joint at the front cover plate.

These rubber mountings act as a complete insulation of engine from frame and any engine noises that might possibly develop cannot be transmitted to the interior of the car, thus preventing body rumbles.

The rubber is of great durability and holds the power plant rigidly. By this development the engine is relieved of acting as a cross member for the frame, a special strong steel tubular cross member being incorporated in the frame at this point.

FUEL SYSTEM

A 20-gallon tank at the rear of the frame is provided. Feed is by vacuum to a smaller tank on the dash. A large sized tank filler projects outside the frame member giving great accessibility, a vent pipe incorporated in the filler permitting the escape of air and thus preventing splashing when the tank is filled.

VACUUM PUMP

Unlike most vacuum systems, which depend solely upon the intake manifold vacuum, the flow of fuel to the carburetor is positive under all conditions and even when climbing the longest hills, and running at top speed for long distances. This is assured by a special vacuum pump, placed at the rear of the crankcase and driven by an eccentric on the camshaft. The pump, together with the intake manifold vacuum, provides the vacuum necessary to lift the gasoline to the vacuum tank, under all conditions, from which it flows to the carburetor. This arrangement is entirely unique and is protected by Cadillac patents.

FUEL STRAINER

The engine fuel is cleaned of dirt and water twice between the gasoline tank and the carburetor by two straining devices; once before reaching the

ım tank and again after leaving it. The second strainer is of the vis- ·pe.

CARBURETOR

ıe Cadillac carburetor was designed to meet every requirement of the lac eight-cylinder engine, and is manufactured in the Cadillac factory. f the air valve, single-jet type, but with a number of exclusive features. ɔcated between the cylinder blocks, the Cadillac carburetor is but a and equal distance from each of the eight intake passages; as a result ıssages are short and direct.

ıe auxiliary air supply, by which the correct mixture is automatically ained at all speeds and throttle openings, is controlled by a leather l swing valve, governed by an adjustable spring.

ıree thermostatic elements are embodied. One thermostatic device ɔls the action of the auxiliary air valve. The second thermostatic element regulates the action of the throttle pump to compensate for changes in temperature. A third thermostat, acting only at unusually high temperatures, opens a vent to permit the escape of gas pressure which might be generated in very hot weather by "high-test" gasoline.

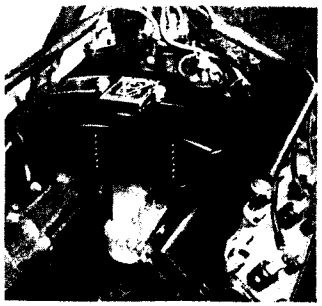

·ncasing the carburetor, this heat deflec- dds considerably to the appearance of the engine

These thermostatic elements render unnecessary seasonal adjustment of the carburetor.

Encasing the carburetor is a specially constructed carburetor heat de- · which adds considerably to the appearance.

THROTTLE PLUNGER PUMP

ıe requirement for a mixture of additional richness at the moment of ration is met by a plunger pump, operated from the throttle shaft, ɜ the necessary extra fuel through the spray nozzle.

EXHAUST HEATED INTAKE

Complete vaporization of gasoline is provided for by an exhaust heated intake manifold fitted with a new manual control regulating the amount of heat. This is operated by a lever on the instrument board.

The intake manifold is of the high turbulence type, insuring perfect distribution under all conditions.

The intake manifold is heated direct from the exhaust manifolds. By application of heat above and beyond the carburetor, that part of the mixture, which normally would condense and lodge on the walls of the intake manifold, remains a part of the explosive mixture which enters the cylinders.

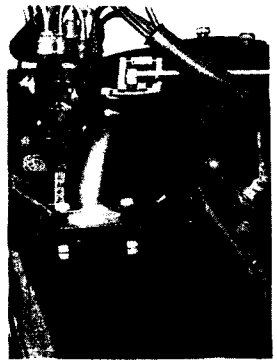

This valve, manually controlled from the instrument board, deflects exhaust gases from one cylinder block through the intake header jacket for warming up a cold engine

The amount of heat supplied to the intake header is controlled by a butterfly valve placed in the front of the left-hand exhaust manifold.

When this valve is closed the exhaust gases from the left-hand cylinders must pass through the intake header jacket to the right-hand exhaust manifold, thus giving maximum amount of heat necessary for carburetion.

When the butterfly valve is opened after the motor has been running for a period of time, there is no continuous flow of exhaust gas through the intake header jacket. The amount of heat is then just enough to maintain good carburetion without power loss from overheating.

Thus the use of this valve control gives immediate application of heat, at the vital point in the fuel system, resulting in remarkably good carburetion in a cold motor almost instantly the engine is started, the device being of great value in cold weather.

Ignition System

he Cadillac engine has a single Delco-Remy ignition system of the high
on type, a simple, high grade and reliable design embodying the follow-
ements:

he source of current is the battery charged by a generator with auto-
regulation of charging rate.

n ignition timer, which interrupts the low tension current at the proper
nt to produce a spark high tension circuit. An induction coil, transform-
ne primary current of six volts into one of sufficient voltage to jump be-
the points of the spark plugs. The coil is of the ironclad type and is
letely enclosed, making it waterproof.

condenser, which assists the induction coil to raise the voltage, and
protects the contact points of the ignition timer against burning.

high tension distributor of the jump-gap type which directs the distri-
n of the high tension current to the spark plugs.

ructurally, the ignition timer, the high tension distributor and the con-
r constitute a single assembly which is bracketed to the front of the
case.

DOUBLE SET OF CONTACT POINTS

he ignition timer, which is driven by a vertical shaft through spiral gears
the camshaft, has two sets of contact points. These break alternately,
ng the work which would otherwise be done by one.

he firing order of the cylinders is as follows:

	8	7	5	2
Front				
	1	4	6	3

AUTOMATIC SPARK CONTROL

ne of the many features embodied in the Cadillac is the further develop-
of the automatic spark control which relieves the operator of practically
ark lever manipulation.

The Cadillac automatic spark control is so effective that it has been possible to remove the spark control lever from the steering column and place it on the instrument board.

Cooling System

The temperature of the Cadillac engine is maintained at the point of maximum efficiency and smooth running by forced water circulation, with thermostatically controlled radiator shutters.

WATER PUMP

Circulation of water through the radiator and water jackets is maintained by a centrifugal pump mounted on the right side of the engine and driven by a silent chain from the crankshaft. The pump is coupled to the driven sprocket by a flexible coupling of laminated spring steel. This permits the pump shaft to align itself and run perfectly true in the packing.

THERMOSTATIC CONTROL

Thermostatic control of engine temperature was developed and first employed by Cadillac.

Vertical, balanced radiator shutters, controlled by a thermostat in the upper radiator tank, control the cooling water temperature.

When the engine is cold, the shutters are closed, cutting off the passage of air through the radiator. As soon as the temperature of the water reaches a predetermined point, the thermostat opens the shutters to the exact degree necessary to maintain the correct temperature.

The shutters not only control the temperature of the water, but also the temperature of the air under the hood, which assists carburetion and, with the use of the thermostatically controlled carburetor, greatly reduces the "warming up" period.

RADIATOR

The Cadillac radiator is of an entirely new design being outstandingly individual and possessing a distinction and impressiveness quite its own. It is

e cellular type core and the front is fitted with vertical shutters which natically control the engine heat.

eautifully proportioned along deep narrow lines it has a sweeping curved instead of the more usual straight line. The radiator shell in which the s cased is heavily nickeled, and a new type radiator cap of extremely diameter is built close to the shell.

ounted low in the frame, this radiator accentuates the low-slung lines e car as a whole. A six-blade fan is driven at engine speed from the cam- by a V-belt. The fan hub carries a gear oil pump and oil reservoir for its ubrication. *It is necessary to add oil to the reservoir only every 1000*

Lubrication System

he engine is lubricated by the pressure circulation system, employing a ump which is driven by an extension of the distributor shaft. The pump ached to the cap on the front main bearing which it supplies through a t passage. The oil supply is carried in the pressed steel reservoir, of 8 s capacity, which closes the under side of the crankcase. A screen covers ntire area of the reservoir above the oil.

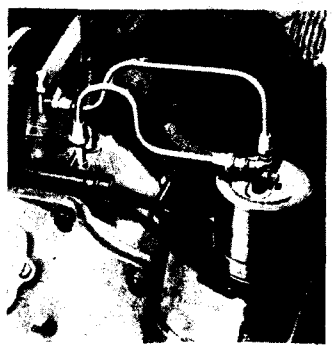

unction with Cadillac's system of crank- ntilation, this oil filter renders it unnec- o change engine oil for at least 3000 miles

LEADS TO ALL BEARINGS

The oil is forced by the pump to a manifold fitting which runs the length of the crankcase above the oil pan, at the left. Leads connect this manifold to the center and rear main bearings, the rear camshaft bearing, the pressure gauge and filter.

OIL PASSAGES THROUGH CRANKSHAFT

Oil passages in the crankshaft conduct the oil from the main bearings to the connecting rod bearings. Oil forced from the connecting rod bearings is thrown by centrifugal force into the cylinder walls and pistons, lubricating the cylinders and wrist pins. Oil is also led under pressure through the hollow camshaft, positively lubricating all cams and bearings.

PRESSURE REGULATED

The pressure under which the oil is forced through the circulating system is controlled by an adjustable piston valve pressure regulator. Overflow from the regulating valve lubricates the chains and chain mechanism.

VALVE LUBRICATION

The valve stems are lubricated automatically by means of ports in the cylinder walls. All oil drains back into the reservoir.

An oil level gauge is provided on the top of the crankcase at the rear of the right cylinder block.

Crankcase Ventilation

The Cadillac system of crankcase ventilation is unique and effective, preventing contamination of the crankcase oil with water and unburned fuel vapors. It is so effective that oil changes are necessary only after every 2000 miles.

An air port is provided in the left side of the crankcase. Due to the rotation of the crankshaft with its compensators, preheated air is drawn through this port and builds up in the crankcase a pressure slightly above atmospheric pressure.

In each cylinder wall a port is provided, which is uncovered as the piston passes upward. Seepage vapors, which pass the piston rings, are met by the pressure from below and forced through the port into the valve compartment. Conduits conduct the gases to the outside.

Starting and Lighting System

The Cadillac-Delco starting and lighting system was developed as a t of many years of effective coöperation between the Dayton Engineer- aboratories Company and Cadillac engineers.

The units of the starting system include a source of current supply—a rator; a means of storing the current generated—a storage battery; a method of applying the current to crank the engine—a motor.

SINGLE WIRE SYSTEM

A single wire system connects the different units, the circuit being com- ed through the frame. Connections from the chassis circuits to the body nits are all made through accessible terminal blocks on the dash.

GENERATOR

The generator is driven at 1½ engine speed by the crankshaft through same silent chain as the water pump and is located on the right side of motor, directly back of the water pump. Current regulation is by an ad- able third brush, and an automatic thermostatic switch. The switch ices the charging rate when the engine and generator warm up.

STARTING MOTOR

The starting motor, a Cadillac-Delco six-pole unit, is mounted horizon- at the right side of the transmission case. The starter pinion, which hes with teeth on the outside of the flywheel, is controlled by the starter al. The starter has an exceptionally high stalling torque, capable of nking the engine at any temperature.

STORAGE BATTERY

The specially built Cadillac-Exide storage battery gives uninterrupted vice and long life. It is a 130 ampere hour, 3 cell, and 6 volt. The battery arried in a dust shield compartment on the right side, and is accessible emoving a cover in the shield.

IGNITION SWITCH

A locking cylinder on the instrument board which acts as an ignition switch, is connected to the distributor by a hardened armored cable, impossible to cut. The switch "grounds" the connection leading to the distributor when the ignition is shut off. This device renders the car theft proof.

LIGHTING UNITS

Two large headlamps, twelve inches diameter, of the bullet type are used. These have a windsplit tapering from the front top of the lamp to the apex at the rear and this windsplit is carried out also in the two side lamps on cowl brackets.

The headlamps are mounted on brackets attached to the fenders, and a horizontal monogram rod between the headlamps, and vertical nickeled lamp standards add a striking note to the appearance of the car.

The headlamps have double filament bulbs, and highly efficient fluted diffusing lenses which deflect and spread out the rays. They are controlled by a switch at the center of the steering wheel. A single wire system supplies current to the lamps, one side of each lamp socket being grounded.

The headlamps, side lamps and tail lamp are controlled by a single lever at the center of the steering wheel. This operates a switch located at the bottom of the steering column. The instrument board lamps are controlled by a separate switch on the instrument board.

The tail lamp is mounted on the left rear fender. The stop signal switch is operated from the foot brakes, the lamp being placed on the right rear fender.

Protection is afforded to the various circuits by circuit breakers.

Instrument Board

The instrument board is finished in black Duco and is edged with nickeled moulding.

Upon this board the instruments are set in symmetrical order and are

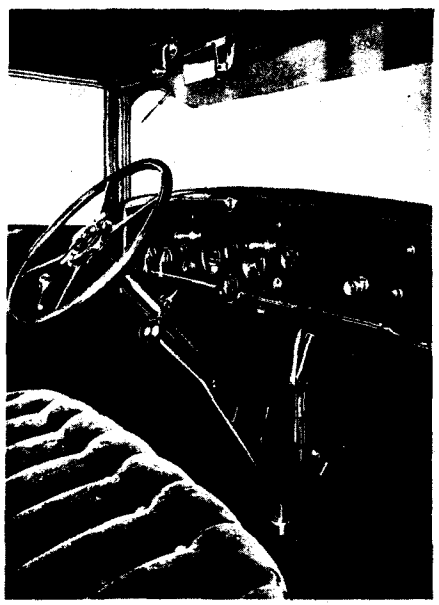

d to spare in this driving compartment. For easy read-'ruments are separately positioned in businesslike array across the board

arranged in an individual assembly. They are not grouped together, a distinctive note being attained by this departure from present day practice.

Arranged on the board from left to right are windshield wiper control; switch for instrument board lighting independent of switch on steering wheel; carburetor heat control; spark control; oil pressure gauge; button controlling carburetor enriching device; speedometer; ammeter; electrically operated gasoline gauge; eight-day clock; ignition lock; motor temperature indicator; and combination inspection lamp igar lighter. In the center top of the board is a Cadillac medallion; nall lamps illuminate the instrument board.

Horn

high grade, high frequency vibrator type horn is located on the left f radiator attached to the headlamp support.

Power Transmission System

CLUTCH

The clutch is of new design. It is the disc dry plate type with two driven discs, each 9½ inches in diameter, faced on both sides with compressed asbestos fabric and driven by the flywheel. All springs, levers and other parts of the clutch, with the exception of the clutch thrust bearing, are attached to the flywheel. The clutch thrust bearing is carried on a sleeve attached to the transmission case. As a result of this construction there is a reduction in inertia of the spinning member of the clutch and thus unusual ease of gear shifting is attained.

This design of clutch is built so that it will withstand, without need of adjustment, all manner of stresses and strains to which this part of the transmission system is liable to be subjected.

GEAR SET

The Cadillac selective gear set provides for three speeds forward and one reverse. The gears and shafts are alloy steel, oil-hardened. The faces of the gear teeth are accurately ground and the ends of the teeth are chamfered, facilitating easy and quiet gear shifting. The gear faces distribute tooth pressure over an ample area to minimize wear.

The rear of the clutch shaft and the main transmission shaft revolve on ball bearings. The front end

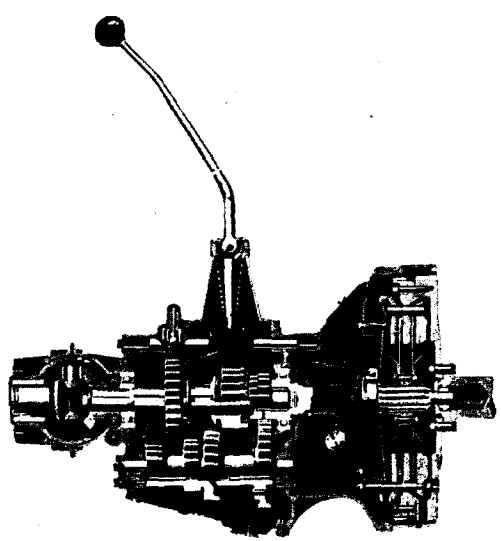

The faces of the transmission gear teeth are accurately ground, giving quiet operation. The clutch is of entirely new design

clutch shaft is carried in a bearing housed in the rear end of the crank-
The countershaft gear cluster revolves on two roller bearings on a
iary tubular shaft.
ast-iron case is used to house the transmission mechanism which gives
r gear operation than would one of aluminum alloy.

PROPELLER SHAFT

ıe propeller shaft, between the transmission and the rear axle, is a
steel shaft, 2½ inches in diameter in the center, tapering to 2 1/16
at each end, turning in a torque tube which completely seals the en-
sembly.

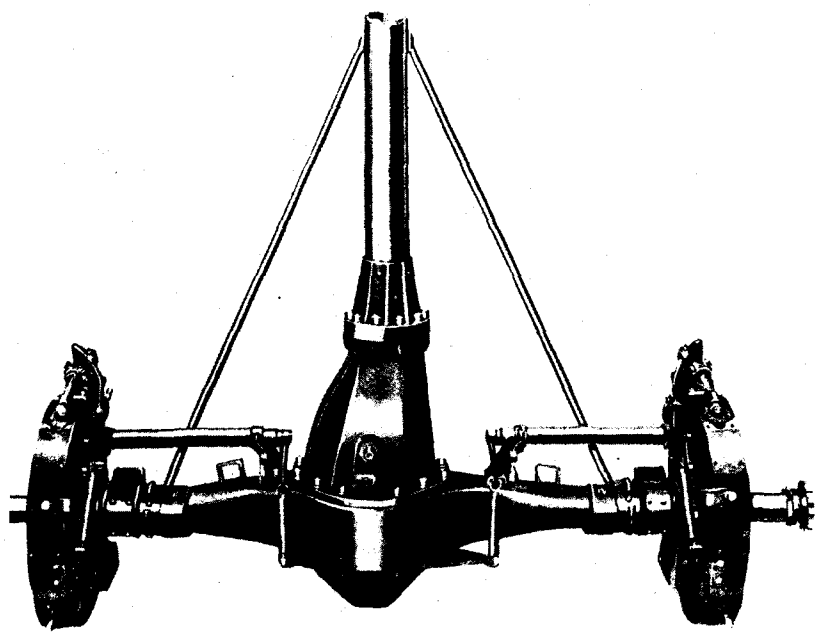

The propeller shaft assembly is wholly sealed within a torque tube which transmits the driving impulse and absorbs torque reactions

The rear end of the propeller shaft is rigidly connected to the pinion shaft of the rear axle by a splined sleeve. The front end of the propeller shaft is connected to the transmission shaft through a universal joint which is immediately behind the transmission case and is lubricated by the transmission lubricant.

TORQUE TUBE DRIVE

A torque tube surrounds the propeller shaft. The rear end of this tube is bolted to the differential carrier and the front end is pivoted in a ball-and-socket joint at the rear of the transmission. This tube absorbs the torque reactions that accompany acceleration and application of the brakes.

Chassis

FRAME

Strength and rigidity, with a resultant extremely wide margin of safety and very long life, are the bases upon which Cadillac engineers have designed the sturdier frame of the New Cadillac.

The side bars have a long, deep channel section through the center, where the stress is most severe, and wide top flange. The front sections of the side frame members are reinforced by steel plates. There is a gradual reduction in the section toward each end with "kick-ups" over both front and rear axles.

SEVEN CROSS MEMBERS

The side bars are rigidly tied together by seven cross members; a control cross member of channel section; a cross member below the radiator which supports the radiator and the front end of the engine; a channel cross member opposite the front ends of the rear springs; a channel cross member at the rear of the body, supporting the gasoline tank; three tubular cross members, one at the front and one at the rear outriggers and one just to the rear of the engine.

REAR AXLE

The rear axle is of the full floating type with special alloy steel axle shafts, gears and housing tubes. The ring gear is mounted on large

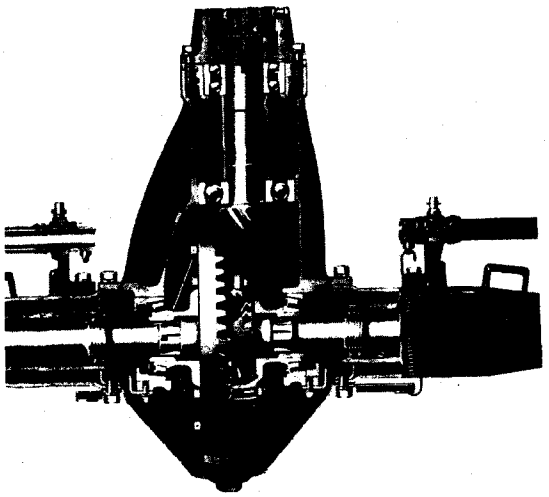

'ull floating rear axle is newly designed throughout and built of d alloy steels. Ring gear and differential are stiffer and heavier than in earlier Cadillacs, in keeping with the substantial increase in engine power

taper adjustable roller bearings. The pinion is mounted on large ball bearings, the thrust being taken by a double row ball bearing. Hub clutches are forged integrally to the ends of the axle drive shafts.

Fourteen driving teeth engage with similar teeth cut internally in the wheel hub. The drive shafts do nothing but transmit power from the differential to drive the rear wheels, all of the load due to weight being carried by the axle sing. Each set of gears is lapped together at the factory. A large remov- cover plate is located at the rear of the axle housing so that the gears differential are easily accessible.

FRONT AXLE

The front axle is the reversed Elliott type. In it the angular relationship the various parts has been so adjusted that greatly increased ease and urity of control have been made possible.

The front wheels run on adjustable taper roller bearings, while the spin- s pivot on the axle ends on adjustable roller thrust bearings. The parallel is straight and has self-adjusting ball-and-socket joints at the ends.

SPRINGS

All springs are semi-elliptic, and are unusually long and flexible. The rear springs are underslung thus giving a lower body level and a lower center of gravity. Large width of the springs gives great lateral support. Different springs are used for various body models, so that maximum ease of riding may be secured in all cases.

The rear springs transmit no driving forces and are shackled at both ends. The shackles are of the tension type and those at the rear ends of the rear springs are provided with a ball-and-socket joint which relieves the frame and body, as well as the springs, of twisting strains when traveling over uneven roads. Spring leaves are silico-manganese steel, heat-treated to give maximum life. New type hydraulic shock absorbers are fitted front and rear giving greatly improved riding.

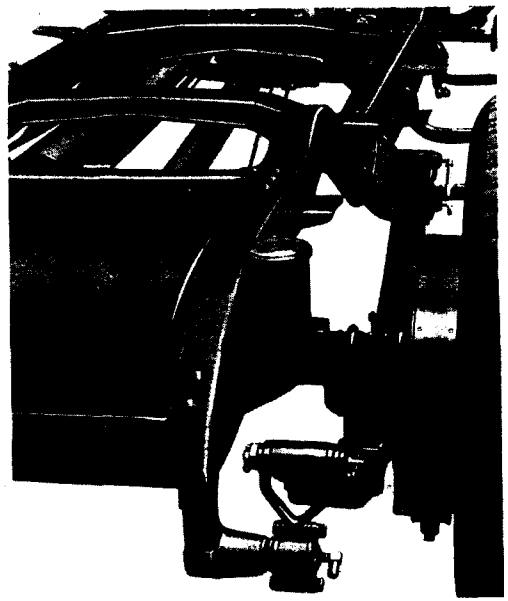

An underslung rear spring with "kicked-up" frame brings the body 2¾ inches nearer to the ground than in former Cadillacs. Note the flexible spring suspension with link shackle in front and the ball-and-socket shackle at the rear

WHEELS

Three types of wheels are available—artillery, wire or disc. Artillery wheels have demountable rims of split type while the rims are integral with wire and disc wheels. The artillery type has twelve spokes of best selected hickory in each wheel. The felloe is of steel, with spokes anchored into place under hydraulic pressure.

The wire wheels are designed to offer unusual lateral strength. Disc wheels have a double curve of such propor-



entric bushing of the steer-shaft by which the sector stable. A neat leather boot he joint from grit and moisture

tions as to insure resiliency and freedom from rumble. Disc wheels are optional, wire wheels at extra charge.

STEERING GEAR

The steering gear is of the worm and sector type, providing a reduction of 14 to 1. The worm is supported in the gear housing by plain bearings taking the radial load, and adjustable ball bearings which take the thrust. The sector is machined from a single drop forging of nickel-steel.

The steering wheel rim is of a special design of rubber composition with steel reinforcement. It is 19 inches in diameter and has four sections with a d grip. The hub is of aluminum alloy with throttle control lever and ing switch lever at the hub. The tubular steering connecting rod has a and-socket joint at each end. The spindle arms, of generous dimensions, orged of chrome-nickel steel.

FOUR-WHEEL BRAKES

he complete braking system of the Cadillac ists of three pairs of brakes—external brakes ig on the rear wheels; internal brakes acting ie rear wheels; and internal brakes acting on ront wheels. All of the brake drums have the e diameter—16 inches.

The rear wheel external brakes and the front el internal brakes are operated simultaneously he brake pedal. The rear wheel internal brakes operated by a hand lever which has the cus-ary provision for locking the rear wheels when car is standing. The hand brakes are independ-of the foot brakes in every detail of their

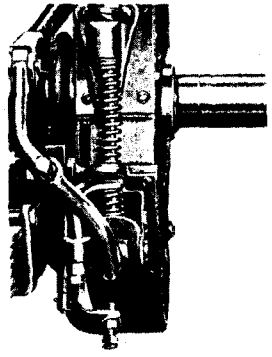

A double spring keeps the adjustment of the rear brake at the correct tension, and prevents hand ends from riding when brakes are released

mechanism, thus providing a complete reserve braking system. Rear brakes are operated by bell cranks, while those of the front wheels are operated by toggles. The hand brake operates internal expanding bands in the rear drums. The hand brake has full wrapping action in both directions and will not require adjustment during the life of the lining. All controls are so arranged that brake action remains entirely unaffected over the roughest roads. Cadillac brakes are designed with the greatest consideration of safety. Provision for safety includes four factors which give a combination only attained with Cadillac type mechanical four-wheel brakes.

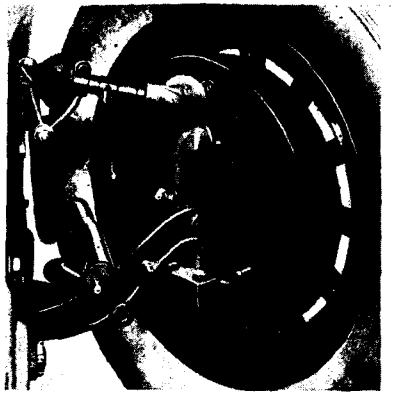

Cadillac's distinctive internal expanding front wheel brakes. Mechanically controlled, these brakes automatically release on the outer wheel when turning a corner with brakes applied

The first factor is a construction that provides for the partial or complete release of braking effort on the outer front wheel, during a turn, so that it is impossible to lock both front wheels when turning, one wheel always continuing to rotate to steer the car.

Another factor is the proper proportioning of the braking effect between front and rear wheels. In order that the front wheels will not lock until more than enough pressure has been applied to lock the rear wheels, the braking effect of the front wheel brakes is purposely made less than that of the rear wheel brakes. Provision for safety is further made to counterbalance the effect of heat in expanding the brake drums. Internal brakes on the front wheels are combined with external brakes on the rear wheels. Through the division bar, to which the brake pedal is connected, the effect of expansion of the front wheel brake drum is neutralized by the opposite effect of expansion of the drums on the rear wheels. The applied position of the brake pedal, therefore, hardly changes as the drums expand, minimizing the possibility, on long steep grades, either of the brakes seizing, or of being unable to apply the brakes because of heated drums. Finally, safety is enhanced by the provision of a hand brake, operating an entirely separate and independent system.

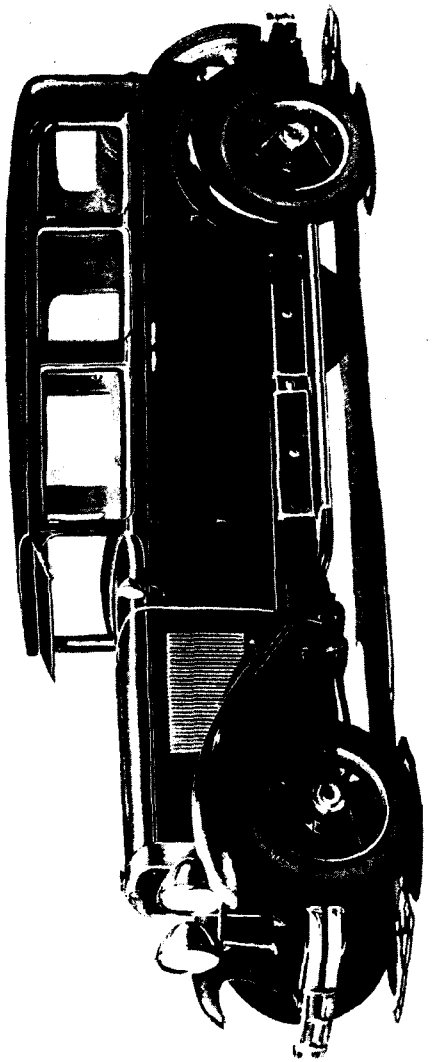

Long and low, with sweeping fenders, mobish moulding, wide doors, the New Cadillac aptly symbolizes luxury and aristocratic distinction

PART II

CADILLAC BODIES

For the superb mechanism of the New Cadillac there has been created a line of bodies so distinctive in beauty, luxury, comfort and richness that the Cadillac very definitely establishes a new vogue in fine motor cars.

Modernistic, in accordance with the trend of today, yet possessing restraint and dignity that accentuate their well-bred air, these body styles make a strong appeal to lovers of beauty of line, balance and harmony.

The unusually long wheelbase of 140 inches and the underslung rear springs permit bodies that are marked by extremely long, low and impressive lines.

Exquisite finish; artistic trim; hardware and appointments chosen by master designers; harmonies of color never before introduced—these are details which contribute much to luxury and richness.

The bodies for the New Cadillac are the reflection of the Cadillac Motor Car Company's recognition of the fact that for the discriminating, exacting demands of the fine car market, today's car must be unmistakably of today, for today.

The Cadillac line consists of fourteen Fisher Custom Body models and twelve Custom Bodies by Fleetwood.

The Fisher Custom Body types are:

- Two-passenger Roadster
- Four-passenger Phaeton
- Four-passenger Sport Phaeton
- Seven-passenger Touring
- Two-passenger Coupe
- Two-passenger Convertible Coupe
- Five-passenger Coupe
- Five-passenger Sedan
- Five-passenger Town Sedan
- Seven-passenger Sedan
- Five-passenger Imperial
- Seven-passenger Imperial
- Five-passenger Imperial Cabriolet
- Seven-passenger Imperial Cabriolet

The Fleetwood Custom Body types are:

- Five-passenger Sedan
- Five-passenger Sedan Cabriolet
- Seven-passenger Sedan
- Seven-passenger Sedan Cabriolet
- Five-passenger Imperial
- Five-passenger Imperial Cabriolet
- Seven-passenger Imperial
- Seven-passenger Imperial Cabriolet
- Transformable Town Cabriolet, Style 3512
- Transformable Town Cabriolet, Style 3520
- Transformable Town Cabriolet, Style 3525
- Transformable Limousine Brougham

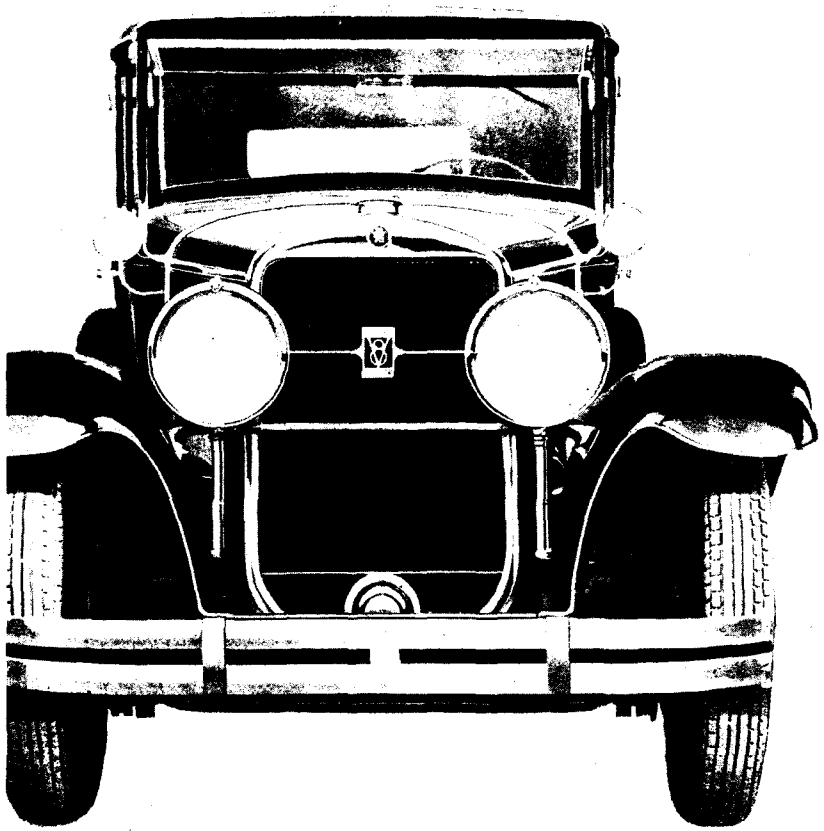

Majestic with its imposing radiator, great headlamps, and distinctive monogram rod, the New Cadillac dominates the highway

The Fisher Custom Body Line

From the handsome, distinctive radiator, deep slung in the chassis, creating a low, fleet and powerful appearance, to the distinctive, slat-covered gasoline tank in the rear, these bodies reflect a departure from all commonplace body designs.

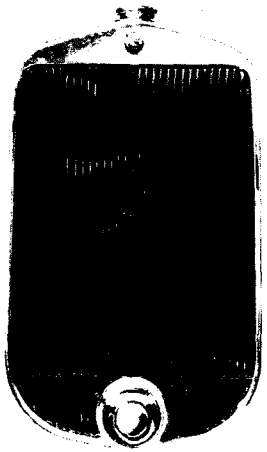

Deep, narrow, with a flowing curve across the bottom, the new radiator is imposing and graceful

The radiator itself is of an entirely original design, deep, narrow, with its depth accentuated by vertical shutters which are operated thermostatically.

The base of the radiator is a beautiful curve instead of the more usual straight line base and a large crank cap is let into the lower portion of the radiator lending a striking note.

Encased in a nickeled shell, at the top front of which is carried a Cadillac medallion with a black background, the radiator is surmounted by a new type radiator filler cap built close to the shell, giving the effect of an extremely large filler opening.

The head-on appearance of the car is deeply impressive and dignified, with its two large headlamps of the bullet type, each 12 inches in diameter, with a windsplit tapering to the apex. This windsplit is duplicated in the two bullet type side lamps which are mounted on the nickeled cowl band.

The headlamps are carried on horizontal brackets, mounted on each fender, and headlamp wiring is concealed in two vertical nickeled lamp standards, connected by a horizontal monogram rod, which greatly enhance the car's appearance.

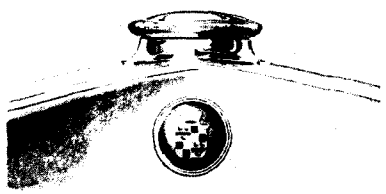

The modish filler cap is unusually large—unusually close to the radiator shell

ıe long wheelbase and the low, ing lines of the hood with its thirty ınd narrow louvers are indicative e great power and well propor- l balance of body and hood that ıtstanding characteristics of the ar.

ide sweeping fenders of one-piece give fleet lines to the car as a and by their contour emphasize ow-slung appearance of the car.

unning boards of rigid metal con- tion, covered with rubber mat- and a specially designed nickeled ding of a rounded section, give the boards a smart finish. A new type mper is fitted front and rear consisting of two bars of oval section ly nickeled. The bars are 2¼ inches deep.



Massive bullet type headlamps are fitted with two-filament bulbs for maximum safety in night driving

he battery box is let into the front of the right-hand dust shield, the of which also forms a kick pad. Another kick pad is located in the dust l beneath the rear door, a step light being placed in between the two kick pads. In the left side dust shield is a tool box with combination cover and kick pad and a second kick pad beneath the rear door.

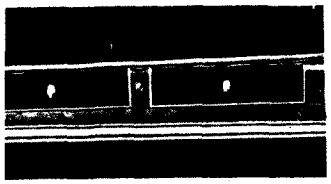

rt kick pad under each door protects the lustrous finish

The interiors of the bodies are finished in a wide choice of mohair velvets of the finest quality and in broadcloth. Seat cushions in closed bodies are tufted and plaited over special form fitting ry type springs that are the last word in comfort. Open models are olstered in soft pliable leather.

Iardware of exquisite design in Butler silver finish is in keeping with exacting taste shown in the whole of the interior fitting. Vanity case.

foot rest, robe rails and assist cords are included where required. Special inlaid walnut paneling of new design adds further charm to the interiors.

The instrument board, with instruments arranged in individualized assembly, is finished in black Duco with a narrow nickeled moulding. This arrangement of instruments, departing from the more commonplace grouped assembly, lends a distinctive air to the driving compartment.

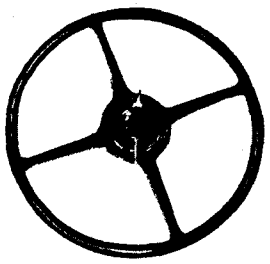

Hand-fitting, restful, the smart wheel is 19 inches across

The steering wheel is a new type of rubber composition. It is 19 inches in diameter and of a narrow cross section with ribbed grip which makes for easy handling, and at the same time lends a distinctive note to the interior. In the hub are set controls for lighting, parking and throttle.

On all models, both open and closed, except the Five and Seven-passenger Imperial models, the front driving seats are easily adjustable so that the driver may obtain the greatest driving comfort. Thus, the driving seat may be moved forward or back to suit the needs of women drivers; so adjusted that even a very small woman driver may drive with an absence of strain and stretching.



The simple mechanism that permits instant adjustment of the driver's seat

Folding arm rests are used in the center of the rear seats on all cars, open and closed, a feature giving comfort appreciated by rear seat passengers on long journeys.

Two tail lights of new design are used, one on each rear fender. The tail light is mounted on the left fender and the stop light on the right rear fender.

Better accessibility is provided for the gasoline tank filler which projects vertically outside the side frame member. The back view of the car is greatly enhanced by the unique finish of the gasoline tank which is fitted with a metal covering of a corrugated slat effect. All bodies and hoods are finished in Duco.

OPEN CARS

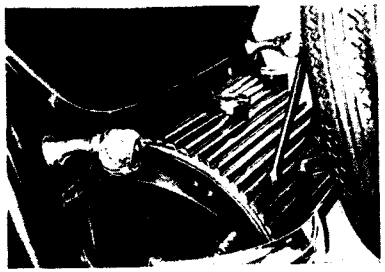

Especially striking is the slatted metal panel over the gas tank. Note, too, the fender mounting of rear lights

he most striking characteristic of ppearance of the New Cadillac models is the spirit of swift grace seems inherent.

these models the beauty of the long lines is utilized to fullest adge. Striping and moulding add to ashing and modernistic effect and e impression of raciness, power peed.

he Fisher Custom Body open cars consist of the Two-passenger Road- Four-passenger Phaeton, Four-passenger Sport Phaeton and Seven-nger Touring.

he moulding on these cars is distinctly original. Running horizontally the top of the bodies this moulding, which is of unusual depth, makes utiful upward curve to the base of the windshield.

nickel-plated windsplit panel is formed in the center of the top of the by moulding commencing from the hood hinge line and sweeping on r side into the base of the windshield.

ll open cars have one-piece folding type windshields. An additional fold- ype windshield is fitted on the tonneau cowl of the Sport Phaeton.

he tops are of wood bow construction with nickel-plated slat irons. s and side curtains are of gray double texture material of substantial ity. Top holders are of nickel-plated strap type.

wo cowl ventilators are used on either side of the top of the cowl.

nterior hardware is of beautiful design with white nickel finish while ide door handles are of new bar type in white nickel finish.

and buffed leather of a soft, pliable texture and satin finish is used pholstery in colors harmonizing with the Duco body finishes.

utomatic windshield wiper, front and rear quarter bumpers, an stable rear view mirror and top boot are standard equipment on open ies.

CLOSED CARS

The Fisher Custom Body enclosed models are the Two-passenger Coupe; Two-passenger Convertible Coupe; Five-passenger Coupe; Five-passenger Sedan; Five-passenger Town Sedan; Seven-passenger Sedan; Five-passenger Imperial; Seven-passenger Imperial; Five-passenger Imperial Cabriolet and Seven-passenger Imperial Cabriolet.

As in the case of the open cars, moulding and striping play an important part in this development, accentuating the long, low lines.

Horizontal moulding of a unique pattern, great width, and rounded section is carried along the sides of the car and offsets into the vertical panel of the upper body paneling at the belt line. The cowl moulding on the closed cars on either side is a direct continuation of that on the hood and at the junction of cowl and front body pillar, sweeps into a curve alongside the

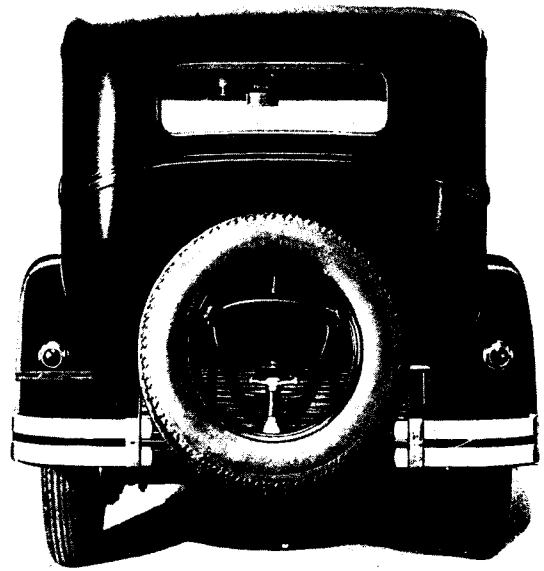

Note the marked impression of extreme lowness. Even the curve of the rear window contributes to this pleasing effect

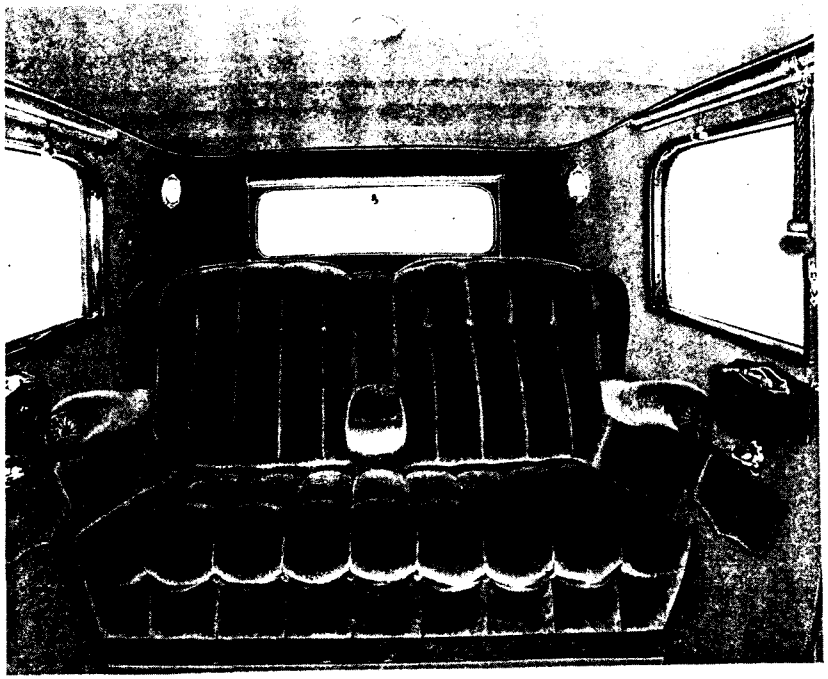

Wider, deeper, more richly appointed, and fitted with folding arm rest, this compartment is the most roomy and luxurious ever built by Cadillac

of the windshield. It then runs back into the center hinge line of the and thus forms a windsplit panel, adding a distinctive note to the cowl. y widening the rear seat three and one-half inches there is provided room for three passengers. Comfort is further increased by the side ests and a folding center arm rest.

xquisite inlaid walnut paneling of new design in all doors and rear win- adds to the luxury of the interiors. Beautiful walnut inlay vanity cases new design robe rail are other features.

he windshield is of the Fisher VV vertical type operated by a regulator le in header bar. A slight lift of the glass opens a ventilating aperture

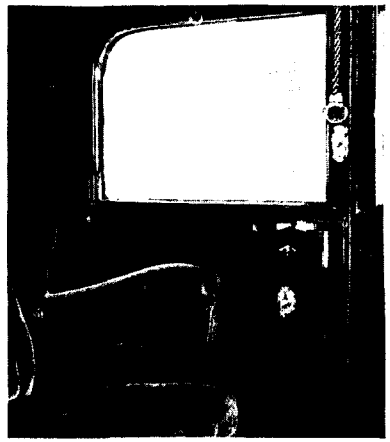

The short, roll type arm rests are luxuriously comfortable

across the entire width of the car behind the instrument board, or a full lift admits a stream of air directly into the body, across the entire width of the windshield.

The windshield is of heavy plate glass in mirror finish with ground and polished outer edges, sliding in velvet covered channels. At the lower edge it engages a soft, flexible rubber seat, forming a waterproof seal.

An adjustable rear view mirror is mounted above the windshield, and a windshield cleaner is carried outside the header bar. Control valve of the cleaner is on the instrument board.

A sun visor of glass set in a nickeled frame is mounted above the windshield. All windows are weather and rattle-proof. The glass is the best crystal plate from $\frac{5}{32}$ to $\frac{7}{32}$ of an inch thick, with mirror finish and ground and polished upon all outer edges. The top or header rail contains a concealed channel, lined with felt, which engages the glass when the window is closed.

Inside door handles are of the remote control type, in Butler silver finish

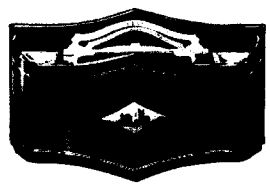

The vanity case repeats the motif of the door mouldings

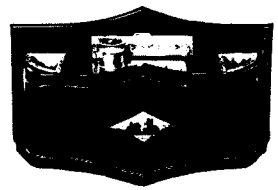

Smoking sets include electric lighter and ash tray

to match interior hardware and outside door handles. The latter are new bar offset type. The key lock in the right front door is operated by the same key that fits all locks. Other doors are fitted with inside thumb lever lock.

The upholstery is mohair velvet or broadcloth of fine quality, with the

tion of the Convertible Coupe, is trimmed with leather. Floor ings on all closed types are high carpet, and carpet is also used e dash.

n all closed models interior are controlled by an automatic h in the door and also by an inual switch in the rear door pillar. step lights are also operated by utomatic door switch.

ll closed models are fitted with lators set in the side of the cowl egulation of temperature in the ng compartment.

Vhere wheels are carried forward nken fender wells, a new type folding trunk rack is mounted at the rear.

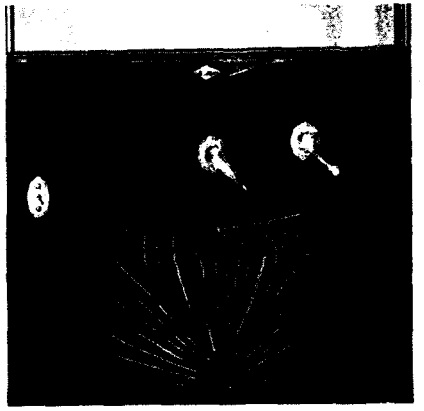

The triangular walnut moulding is a pleasing instance of simplicity and restraint. The high utility of the door pouch is instantly apparent

INDIVIDUAL FEATURES

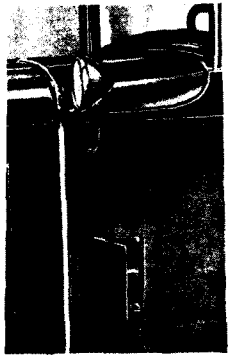

cowl ventilators, controlled nvenient foot levers, assure rt in the front compartment

The Roadster has in the rear deck an unusually large and comfortable rumble seat and attractive nickeled bars are fitted on the rear deck upon which the top rests when folded. A detachable back curtain is a feature of this top. The windshield is of the single panel type which folds forward horizontally.

The Two-passenger Convertible Coupe may be used at will either as a closed or open car. The top folds back, the doors are rigid and a single panel windshield swings outward from the top. With the rumble seat in the rear deck in use, the car thus provides seating for four persons. An inset door, on the right side of the rear deck, gives

easy access for loading golf clubs and hand baggage into the rear compartment. This feature is also found in the Roadster.

A leather fabric covered trunk fitted on a trunk rack is a feature of the Phaeton and Sport Phaeton. The Phaeton has a built-in foot rail and robe rail with assist handles. The outstanding feature of the Sport Phaeton is the rear tonneau cowl giving closed car protection in an open car. This cowl is fitted with a folding type one-piece windshield. Another standard fitment

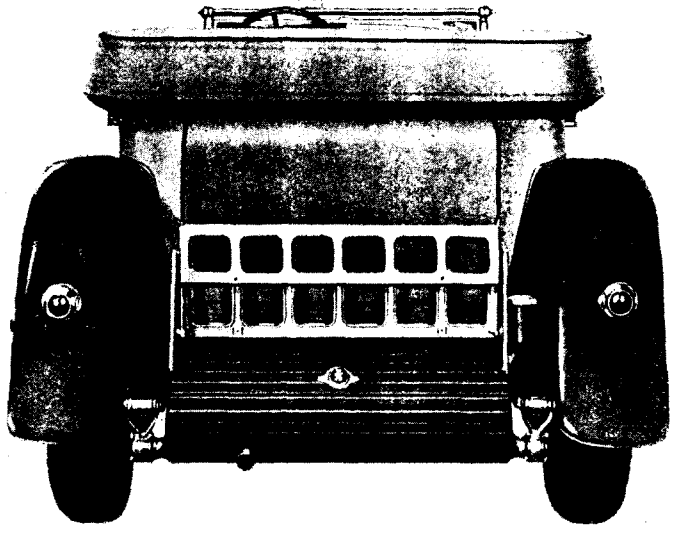

Wide, close to the road, smartly equipped, the rear of the Sport Phaeton reflects the most rigorous of the modern trends

is a large sized spotlight mounted on a tall vertical nickeled post which is bolted to the running board and supported by a wishbone bracket to the side of the cowl.

The Town Sedan is a close-coupled car suiting the requirements of those demanding a more than usually companionable atmosphere for front and rear seat passengers. Ample leg room is provided for rear seat passengers by

out" under the rear of the front seat. A trunk is provided as standard.
rear.
seven-passenger closed cars two folding auxiliary seats facing forward
vided, each giving an extraordinarily comfortable seat for one passen-
ien not in use, these seats fold forward against the back of the front seat.
e Five-passenger Imperial and Seven-passenger Imperial have a dis-
ing glass partition between the driving and rear seating compartments.
ve-passenger Imperial has two tilting seats facing rearward which
to back of front seat.
re wheels, with spare carried at the rear or mounted on front fender
and tire mirrors are obtainable on all body styles at extra charge.

FLEETWOOD CUSTOM BODIES

e Fleetwood line of Custom bodies has been created by the Cadillac
· Car Company to satisfy the steadily increasing demand for the
t in individuality and exclusiveness.
wide and varied is the choice of bodies offered, that anyone requiring
om built body expressing his individuality and exclusive preference
id in the line a car satisfying his own personal requirements.
oreover, he can obtain quick delivery instead of having to wait a long
l of time before his order receives attention as is usually the case when
om built car is ordered.
the Fleetwood line is included the Town Car type of body which is the
ate in aristocratic elegance and distinction.
ie frame is of specially selected ash, and door hinges are hand finished
ronze.
ors are equipped with specially constructed window channels of a type
y preventing window rattle.
iese broadcloth in subdued colors is used throughout the whole line
ie upholstery, a material expressing restraint and good taste. This mate-
s of the highest quality.
1 the Imperial and Town Car types, genuine hand buffed leather is
in the driving compartment harmonizing with the color tones of the

car. Cushions are stuffed with best quality hair. Hardware is of special exclusive Fleetwood design with nickel finish.

Interior mouldings are of mahogany or walnut to match vanity cases. The vanity cases are of Fleetwood design and include hand mirror, clock, memorandum pad and two perfume bottles. Smoking sets contain a cigar lighter and an ash receptacle.

All Fleetwood models are equipped with a pillow to match trimming for the rear seat.

TRANSFORMABLE BODY TYPES

The transformable type of body included in the Fleetwood line has this exclusive feature—the front driving compartment can be treated as open or closed at will.

Windows concealed in the front door panels may be raised, a movable top erected and the driving compartment becomes completely enclosed.

Extension stanchions of steel are erected from the front pillars to the body and the shape and line of the roof are preserved.

The extension roof cover is of genuine English hand buffed double faced landau leather. The roof and stanchions when removed are stored under the driver's seat, so that they are always available and can be attached within a few moments.

The Fleetwood Custom body line consists of the following:

Five-passenger Sedan
Five-passenger Sedan Cabriolet
Seven-passenger Sedan
Seven-passenger Sedan Cabriolet
Five-passenger Imperial
Five-passenger Imperial Cabriolet
Seven-passenger Imperial
Seven-passenger Imperial Cabriolet

Transformable Town Cabriolet
Style 3512

Transformable Town Cabriolet
Style 3520

Transformable Town Cabriolet
Style 3525

Transformable Limousine Brougham

CONDENSED SPECIFICATIONS

POWER PLANT

ɛE—Compensated eight-cylinder V-pe. Ninety-degree angle between linder blocks. Engine and transmis-n in unit; three-point suspension with bber lined supports at rear. Piston dis-acement 341 cubic inches. Bore $3\frac{5}{16}$"; roke $4\frac{1}{16}$". Horsepower S.A.E. rating 5.1; actually 90.

ɴDERS—Cast in blocks of four, with tachable heads.

ɴS—Cast gray iron, special formula, mealed; 3 rings, 2 above wrist pin and below; lower ring special oil regulating pe.

ɴECTING RODS—Drop-forged special rmula steel. Side by side, two on each ankpin. Bearings $2\frac{3}{8}$" x $1\frac{3}{8}$". Babbitt rods at lower ends.

ɴES—Intake $1\frac{1}{2}$" Tungsten steel; ex-aust $1\frac{1}{2}$" silico-chrome steel, $\frac{23}{64}$" lift. echanism enclosed. Valve stems auto-atically lubricated.

ɴKCASE—Copper aluminum alloy.

ɴKSHAFT—Diameter $2\frac{3}{8}$"; length to uter ends of front and rear bearings $23\frac{23}{32}$". Supported on 3 main bearings. rank throws 90 degrees apart, pro-ided with compensators. Rotates with nprecedented smoothness.

ɪSHAFT—Single, hollow shaft with 16 ams, supported on 4 bearings. Driven rom crankshaft by silent chain.

CLUTCH—Of new design of disc dry plate type. Two driven discs $9\frac{1}{2}$" in diameter, faced both sides with compressed asbestos fabric, driven by flywheel to which are attached all springs, levers and other parts of clutch with exception of clutch thrust bearing which is carried on a sleeve bolted to the transmission case.

TRANSMISSION—Selective type with three speeds forward and one reverse. Chrome-nickel steel gears and shafts. Faces of gear teeth ground on special grinding machines to obtain silent operation. Mechanism contained in cast-iron case.

GASOLINE SYSTEM

SUPPLY—Twenty-gallon tank capacity. Vacuum feed. Vacuum in intake manifold assisted by vacuum created by a special vacuum pump to insure positive feed under all conditions.

CARBURETOR—Cadillac design and manufacture. Uniform distribution with maximum efficiency and economy. Automatic thermostatic mixture control. Large, accessible strainer. Overflow from carburetor drained to ground. Intake header exhaust heated. Valve in left exhaust manifold operated from instrument board, when closed deflects back exhaust gases from left cylinders through intake header jacket thus giving maximum heat for carburetor almost immediately.

COOLING SYSTEM

RADIATOR—Copper with cellular core; highly polished nickeled casing.

WATER COOLING—Capacity 6 gallons. Forced circulation by one pump driven by a silent chain from the crankshaft. Cylinder blocks interconnected by a brass tube cast in crankcase. One drain plug for entire system at bottom of pump; 4 hose couplings, easily disconnected.

TEMPERATURE CONTROL — Thermostatically controlled by radiator shutter with vertical balanced shutter blades.

FAN—Diameter $20\frac{1}{4}$"; 6 blades; belt driven by pulley mounted on end of camshaft. Fan bearing positively lubricated.

LUBRICATING SYSTEM

ENGINE LUBRICATION—Pressure system with gear pump conveys oil under pressure to all main bearings, connecting rod bearings and camshaft bearings, and is controlled by an automatic pressure regulator. Oil level indicator is located on right-hand side of crankcase at rear.

CRANKCASE VENTILATION—An exclusive Cadillac system which prevents pollution of lubricating oil from unburned gasoline and from condensation of water vapors produced in combustion.

OIL FILTER—An effective filtering device which removes any impurities, in solid form, from oil.

ELECTRICAL SYSTEM

IGNITION—Cadillac-Delco high-tension system with 2 timer contact arms actuated by 4-lobed cam. Jump-spark distributor thus eliminating rotor button.

GENERATOR—2-pole Cadillac-Delco type mounted on right side of engine. Positive drive by chain from crankshaft. Thermostatic control of charging current.

STARTING MOTOR—Cadillac-Delco separate 6-pole unit; special design, exclusive on Cadillac cars and has unusual stalling torque. Mounted along right side of transmission.

BATTERY—Cadillac-Exide 130-amperehour, 6 volt, 3 cells. Enclosed in moulded box located in right-hand dust shield.

HORN—High frequency vibrator type horn carried on left headlamp bracket at side of radiator.

LIGHTING EQUIPMENT—2 headlamps with tiltable light beams controlled from steering wheel switch; fluted lenses, 21 c.p. double-filament bulbs and side lamps with 3 c.p. bulbs. Two rear lights, one located on each of rear fenders, right side is stop light, left side rear light. Step lights in dust shields which light automatically with opening of doors.

OPERATING CONTROLS

GEAR SHIFT—Center gear shift.

SERVICE BRAKES—Two independent braking systems. Mechanically operated, internal expanding on front wheels and external contracting on rear wheels. Division of pedal pull automatically proportioned between front and rear systems. Front brakes equalized when straight ahead, outer brake released on turn; 16" brake drums on all wheels. Brake drums ground after assembly on wheels.

HAND BRAKES—Internal expanding on rear wheels and will not require adjustment during life of brake lining.

STEERING GEAR—Cadillac design, worm and sector, completely adjustable. Steering wheel 19" diameter, rubber composi-

m, narrow rim with black finish alumi-
m die cast hub and spokes.

CE CONTROLS—Accelerator at right brake pedal. Hand throttle built into ntral portion of steering wheel.

UMENT BOARD—New design; instruents arranged in individual assembly—t grouped. Fitted with windshield per control; carburetor heat control; ark control; oil pressure gauge; button ntrolling carburetor enriching device; itch for instrument board lighting dependent of switch on steering colnn; speedometer; ammeter; electrilly operated gasoline gauge; eight-day ock; ignition lock; motor temperature dicator and combination inspection mp and cigar lighter.

S—Rear axle, Cadillac make, full floatg with special alloy steel axle shafts, ars and housing tubes. Spiral bevel ars mounted on large bearings. Front le, reversed Elliott type, drop-forged rome-nickel steel, I-beam section dropged steering spindles and arms; steerg spindles have adjustable tapered ller bearings at upper ends. Parallel d has spring compensated ball-and-cket connections at end.

E—Hollow steel drive shaft 2½" diaeter in center tapering to 2 1/16" at each nd, turns in torque tube which completely seals assembly. Rear end of drive haft rigidly connected to rear axle by plined sleeve; front end to transmission haft through universal joint. Torque ube is bolted to differential carrier at ear, and front end pivoted in ball-and-socket joint at rear of the transmission. Transmits drive of rear wheels to chassis and absorbs torque reactions due to acceleration and brakes.

FENDERS—One-piece, full crown wide type.

FRAME—Side bar channel section with wide top flange, carbon steel, maximum depth 7½", width 30" in front, 35" in rear; 4 channel cross members and 3 tubular cross members. Front end of side members reinforced by plates riveted to side members.

GEAR RATIO—4.75 to 1.

SPRINGS—Semi-elliptic system of suspension with rear springs underslung. Rear shackle of rear spring tension type with universal ball-and-socket connection to frame. Front springs 42" x 2¼"; rear 60" x 2½". Shock absorbers of hydraulic type, front and rear, give greatly improved riding qualities.

TIRES—Straight side 32" x 6.75" cord balloon.

TOOLS—Complete set of tools in special fabric holder placed in rain-proof box concealed in left-hand dust shield. Cover of tool box forms kick pad.

WHEELBASE—140".

GROUND CLEARANCE—9".

WHEELS—Artillery type, 12 hickory spokes with steel felloes. Adjustable roller bearings, demountable split type rim with 6 lugs. Large steel hub flange with 12 bolts. Disc wheels optional. Wire wheels obtainable at extra cost.

CADILLAC

Operator's Manual



CADILLAC MOTOR CAR COMPANY
DETROIT

Copyright 1928 by
Cadillac Motor Car Company

EDITION NO. 341-1

In ordering a duplicate of this Manual specify the above number or the engine number of the car.

To the New Car Owner—

Parts I and II of this Manual contain information that you must know in order to operate and care for your car properly. This section should be read carefully as soon as possible after taking delivery of the car.

Part III contains information that you will not need until occasion arises. We suggest that you do not read this part at once, but keep the book in the cowl pocket or tool compartment for use when you need it.

Contents

Part I—Operation

CHAPTER I—*Controls and Instruments* 9

Locks—Ignition switch lock—Gasoline gauge—Temperature indicator—Throttle control—Spark control lever—Carburetor enriching control—Carburetor heat control—Starter pedal—Oil pressure gauge—Clutch pedal—Transmission control—Brakes—Speedometer—Ammeter—Lighting switch.

CHAPTER II—*Driving* 20

Driving speed when car is new—Danger of running engine in closed garage—High compression cylinder heads—Coasting—General driving suggestions—Don'ts for general operation.

CHAPTER III—*Equipment* 25

Driver's seat—Windshield—Cowl ventilators—Windshield cleaner—Rear vision mirror—Cigar lighter and inspection lamp—Clock—TOP AND SIDE CURTAINS—Top—Side curtains on open cars—Curtain fasteners—TOOLS—TIRES—Tire valve caps—Inflation pressure—Tire air compressor—Tire holder—Wire wheel carrier—Disc wheel carrier—Lock for spare tires on fenders—Use of jack in changing tires—Changing tires—Truing up rim.

CHAPTER IV—*Cold Weather Operation* 41

PREPARING FOR COLD WEATHER—Anti-freezing solutions—Capacity of cooling system—Effect of alcohol on finish—Winter lubrication—Storage battery—Gasoline system—STARTING THE ENGINE—Carburetor enriching button—Priming the carburetor—Position of throttle hand lever—Position of spark control lever—Use of starter—Use of accelerator before engine is warm.

Part II—Lubrication and Care

CHAPTER I—*Systematic Lubrication* 49

Necessity for lubrication—Lubrication schedule—LUBRICANTS—Engine oil—Chassis lubricant—Wheel bearing and cup grease—Fiber grease—Spring lubricant.

CHAPTER II—*Engine Lubrication* 52

Oil circulating system—Oil level—Oil pressure—Crankcase ventilating system—Oil filter—Replacing engine oil—Generator oil cups—Timer-Distributor oil cup—Fan—Water pump.

CHAPTER III—*General Lubrication* 57

Grease gun connections—Clutch thrust bearing—Transmission—Rear axle—Wheels—Front brake trunnions—Steering gear—Speedometer flexible drive shaft—Springs—Flushing cooling system—Door hardware.

CHAPTER IV—*Care of Body* 61

Care of finish when new—Washing varnished cars—Washing Duco—Care of the top—Cleaning windows—Cleaning upholstery.

CHAPTER V—*Care of Tires* 63
Inflation pressure—Results of under-inflation—Result of improperly aligned front wheels—Value of careful driving—Repairs to tires—Additional suggestions.

CHAPTER VI—*Storing Car* 66
Engine—Storage battery—Tires—Body and top—Taking car out of storage.

Part III—General Information

CHAPTER I—*Engine* 70
Important features of construction—Firing order—Main and connecting rod bearings—Grinding valves.

CHAPTER II—*Gasoline System* 72
General description—Operation of vacuum tank—Gasoline filter and strainer—Adjustment of carburetor—Gasoline tank gauge.

CHAPTER III—*Cooling System* 78
Water circulation—Adjustment of fan belt—Radiator and shutters—Radiator thermostat—Water pump—Filling and draining the cooling system—Cleaning the cooling system.

CHAPTER IV—*Electrical System* 81
GENERATION OF CURRENT—Generator—Ammeter—Thermostatic control of charging rate—Adjustment of charging rate—STORAGE BATTERY—Adding water to storage battery—Specific gravity of battery solution—Disconnecting battery—Exide depots and sales offices—STARTING MOTOR—Operation of starter—IGNITION—General description—Timer-distributor—Adjustment of contact points—Timing ignition—Spark plugs—LIGHTING SYSTEM—Lamp bulbs—Cleaning headlamp reflectors—Adjustment of headlamps.

CHAPTER V—*Clutch and Transmission* 95
Clutch—Adjustment of clutch release rod—Transmission.

CHAPTER VI—*Steering Gear* 98
Description—Adjustment of worm and sector—Adjustment of worm thrust bearings—Adjustment of sector shaft—Steering connecting rod.

CHAPTER VII—*Front Axle* 100
Description—Stop screws—Alignment of front wheels.

CHAPTER VIII—*Rear Axle and Torsion Tube* 103

CHAPTER IX—*Wheels* 103
Tire balancing marks—Tires and rims—Caution in adjusting wheel bearings—Removing front wheel—Installing front wheel and adjusting bearings—Removing rear wheel—Installing rear wheel and adjusting bearings.

CHAPTER X—*Brakes* 108
General description—Temporary adjustment—Adjustment of rear wheel brakes—Adjustment of front wheel brakes.

CHAPTER XI—*Repair Parts* 112
Genuine Cadillac parts—Uniform parts prices—Ordering new parts—Returning parts—Tires, Speedometer and Clock.

CHAPTER XII—*Specifications and License Data* 114

PART I

OPERATION

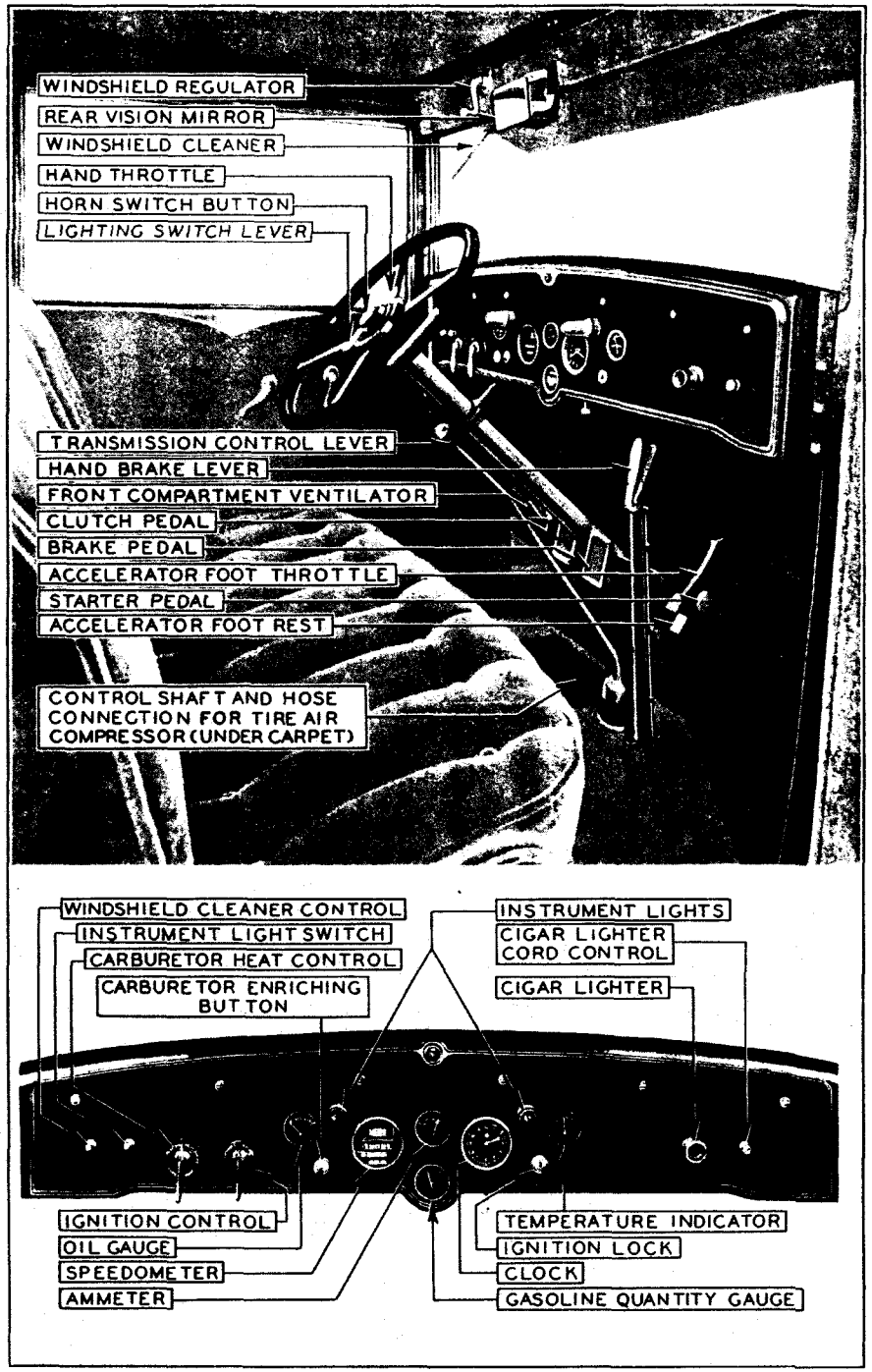

Figure 1. The new driver should familiarize himself with the instruments and controls before attempting to drive.

CHAPTER I

Controls and Instruments

One of the first things the driver of a new car has to do is to familiarize himself with the various controls. In the following chapter are described the levers, pedals, instruments, and other devices used in the operation of the car. The experienced motorist, as well as the beginner, should read this chapter to avoid overlooking any detail of operation in which this car may differ from cars he has previously driven.

Locks

The Cadillac car is provided with the following cylinder locks, all of which on any one car are operated by the same key: ignition lock, tool compartment, battery compartment, tire or wheel carrier, and, on closed cars, the doors and various package compartments.

The lock number is stamped on each key, but not upon the face of the lock. The owner is urged to make a record of the key number as soon as he takes delivery of his car, so that in the event both keys are lost, a duplicate key can be easily ordered.

Ignition Switch Lock

The ignition is controlled by an ignition switch lock which is located at the lower right-hand side of the instrument board (Fig. 1). To switch on the ignition, insert the key in the lock and turn it to the right. The barrel of the lock will then slide out about ¼ inch. To shut off the ignition and lock the switch, simply push the lock all the way in. *This automatically locks the car.*

The ignition switch lock has been given the highest rating granted by the Insurance Underwriters and has several theft-proof features that are of interest to the car owner.

When the switch is locked, it not only disconnects the ignition coil from the battery but it also "grounds" the connection leading to the distributor. This means that any attempt to wire around the switch or to supply ignition current from an outside source would be futile, as the current would be automatically short-circuited as soon as applied.

Tampering with the cable between the lock and the timer-distributor is prevented by the hardened steel conduit in which the cable is carried. The cable is connected to the distributor by a fastening which cannot be disconnected without removing and partly disassembling the distributor.

Gasoline Gauge

The gasoline gauge is the lower dial, marked "Fuel," in the center of the instrument board. It indicates in gallons the quantity of fuel in the tank at the rear of the car, and is operated electrically. To read from the gauge the quantity of fuel in the tank, *the ignition must be switched on*. When the ignition is switched off, the gauge does not indicate the amount of fuel in the tank.

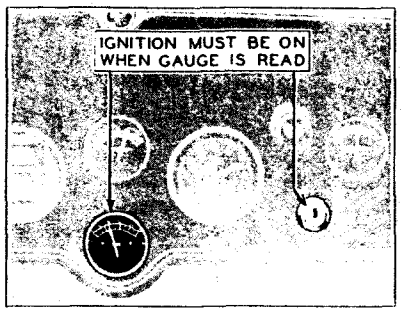

Figure 2. The gasoline gauge is operated electrically by current from the ignition circuit.

As filling station rules forbid running the engine while the gasoline tank is being filled, the ignition should be switched off until the engine stops and then switched on again and left on while the tank is being filled.

If the fuel supply should give out on the road, so that the vacuum tank on the dash becomes empty, it will be necessary after refilling the gasoline tank to *prime* the vacuum tank. To do this, close the throttle and hold the starter down for 20 to 30 seconds. The throttle must be closed while this is done.

Temperature Indicator

The gauge at the extreme right of the instrument panel (Fig. 3) is a thermometer for indicating the temperature of the engine and takes the place of a temperature indicator on the radiator. The bulb end of the thermometer is inserted in the water-jacket at the rear end of the right-hand cylinder head, and is connected by a small tube to the dial on the instrument board.

The normal engine temperature after the engine becomes warm is 150° to 180°.

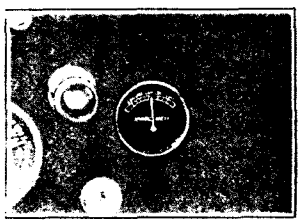

Figure 3. The temperature of the water in the cylinders should range from 150° to 180°.

Throttle Control

The power and speed of the engine are controlled by opening and closing a throttle valve in the carburetor. This throttle is operated both by a hand lever and a foot pedal.

The foot pedal, or accelerator, is at the right of the brake pedal (Fig. 1). The hand control is the upper lever above the steering wheel. Both controls

operate the same throttle; the hand lever, however, remains in the position to which it is moved, whereas the accelerator must be held down to keep the throttle open.

The normal position of the throttle hand lever for driving the car is all the way up (at "Close"). In this position the throttle of the carburetor is open just enough to permit the engine to run at idling speed after it is warm. For starting, however, the lever should be moved approximately one-fourth the way down, and should be left in this position until the engine is warm enough to permit the lever to be returned to the idling position without stalling the engine.

In cold weather, the accelerator should not be pushed down suddenly before the engine is warm. Sudden opening of the throttle before the engine is warm causes "popping-back" in the carburetor. This should be avoided as much as possible by judicious opening of the throttle during the warming-up period. (See page 45 under "Use of Accelerator Before Engine Is Warm.")

Spark Control Lever

Correct timing of the ignition in relation to the positions of the pistons is accomplished automatically by the timer-distributor, which provides for all ordinary advancing and retarding of the spark. (See page 87 under "Timer-Distributor.") A hand control is also provided for retarding the spark on certain occasions as hereafter described.

The hand control is the right-hand of the two levers on the instrument board directly in front of the steering column (Fig. 1). For average driving, the correct position of this lever is all the way toward "Advance." The lever should be left in this position except on the following occasions:

1. If the engine is being cranked by hand, the spark should be fully retarded by moving the lever all the way toward "Retard."

2. In pulling at low speeds with the throttle well open, the spark should be retarded.

3. If, because of the accumulation of carbon in the combustion chambers, the engine knocks or "pings" on acceleration, the spark may be retarded slightly. As soon as possible, the carbon should be removed so that the spark can be fully advanced.

Carburetor Enriching Button

The button at the lower left of the instrument board (Fig. 4) controls a device on the carburetor for temporarily enriching the fuel mixture supplied to the engine. When starting the engine, it is necessary to have the proportion of liquid gasoline in the fuel mixture greater than at other times, because in a cold mixture only a part of the gasoline is vaporized. Pulling out the enriching button increases the proportion of liquid gasoline to air,

the normal proportions being restored when the button is released and permitted to return to its original position.

Correct use of the enriching control not only is essential to quick starting of the engine, but also has an important bearing on the life of the engine. The enriching button must be pulled out far enough in starting to provide an explosive mixture quickly so that the battery is not unnecessarily discharged by useless cranking. The button must also be held out far enough during the warming-up period so that the engine will run without missing and "popping-back." On the other hand, it should not be pulled out any farther or held out any longer than is necessary to accomplish these results, because some of the excess liquid gasoline in the enriched mixture does not burn.

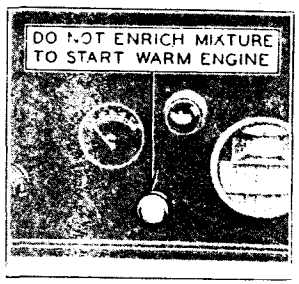

Figure 4. The carburetor enriching control does not prime the carburetor. To have any effect, it must be held out while the starter is cranking the engine.

If the engine still retains heat from previous running, the enriching control should not be used without first attempting to start the engine on the normal mixture. If the enriching button is pulled out for starting a hot engine the mixture may be made so rich that starting will be impossible.

The enriching button is not a priming device. It has no effect whatever on the fuel or the fuel mixture unless the engine is being cranked or is running under its own power. The button must be pulled out and held partly out during the cranking operation.

Carburetor Heat Control

The lever marked "Carb. Heat" on the instrument board, directly in front of the steering column, controls the flow of exhaust gases through the jacket of the intake header which conducts the fuel mixture from the carburetor to the cylinders. This lever operates a valve at the front end of the left-hand exhaust manifold.

The normal position of the lever is as far toward "Heat On" as it will go. When the lever is in this position, the valve in the exhaust manifold is closed and the principal outlet for the exhaust gases from the left-hand cylinders is through the intake header jacket to the right-hand exhaust manifold. There is thus a constant flow of hot gases through the jacket of the intake header, insuring that the fuel mixture is quickly heated to the temperature at which complete vaporization takes place.

Overheating of the mixture when driving continuously at high speeds is avoided by turning the lever to "Heat Off." When the lever is in this position, the valve in the left-hand exhaust manifold is open and the exhaust gases from the left-hand cylinders pass directly to the muffler. There is then no continuous flow of exhaust gases through the header jacket and the fuel mixture receives only just enough heat to vaporize the liquid fuel.

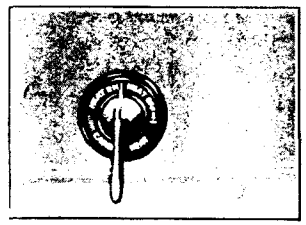

Figure 5. The heat control lever should be turned to "Heat On" except when driving at high speeds.

The lever should be turned to the "Heat On" position when starting the engine, and should be carried in this position for average driving. For continuous driving at high speeds the lever should be turned to "Heat Off." This is important as the maximum power of the engine cannot be obtained with the valve in the exhaust manifold closed.

Starter Pedal

The starter pedal is at the right of the accelerator (Fig. 1). Pushing this pedal forward brings into action the electric motor that cranks the engine for starting. *Do not push the starter pedal when the engine is running.*

The starter pedal is only one of the controls that must be manipulated to start the engine. Unless there is an explosive mixture in the cylinders and a spark to ignite it, it is useless to crank the engine. The starter pedal should not be operated, therefore, until the necessary preliminary steps have been taken. The following, in their proper order, are the various steps that must be performed to start the engine. As each control is mentioned, reference is made to the page on which that control is explained in detail.

1. Make sure that the transmission control lever is in neutral.

2. Place the spark control lever on the instrument board all the way toward "Advance."* (Page 11.)

3. Place the throttle lever on the steering column about one-fourth the way down from the idling position. (Page 10.)

4. Make sure that the carburetor heat control lever is all the way toward "Heat On." (Page 12.)

5. Switch on the ignition. (Page 9.)

6. Unless the engine is still warm, pull back the carburetor enriching

* If the engine is being cranked by hand, move the lever all the way to "Retard."

button and hold it back. If the engine is still warm, do not pull back the enriching button unless the engine fails to start on the normal mixture. (Page 11.)

7. Push the starter pedal forward and hold it until the engine starts. Release it immediately as soon as the engine starts. (See below for probable causes for the engine failing to start.)

8. Let the carburetor enriching button partly in as soon as the engine starts, and all the way in as soon as the engine is warm enough to permit it. (Page 11.)

9. Note whether pressure is indicated on the oil pressure gauge and stop the engine at once if no pressure is indicated.

10. Move the throttle lever up to the idling position as soon as the engine is warm enough to permit it.

In cold weather, disengage the clutch before pressing down the starter pedal, and hold it down during the cranking operation. This relieves the starter of the necessity of turning the transmission gears, which are immersed in lubricant. The additional load is small in warm weather when the lubricant is thin, but in cold weather the power required to turn the gears through the thickened lubricant adds unnecessarily to the demand upon the battery.

If the Engine Fails to Start

If the engine fails to start after being cranked for a few seconds, release the starter pedal and investigate the following possible causes:

The ignition may be switched off.

There may be no gasoline in the tank at the rear of the car.

There may be no gasoline in the vacuum tank on the dash. If the vacuum tank should be empty, prime it by closing the throttle, and, with the ignition switched off, holding the starter pedal down for 20 to 30 seconds. *The throttle must be closed while this is done.* Then open the throttle, switch on the ignition, and try again to start the engine in the usual manner.

The carburetor may be flooded by unnecessary use of the enriching device when the engine is warm. To get rid of this surplus gasoline in the carburetor, *open the throttle wide*, and, with the ignition switched off, hold the starter pedal down for 10 to 15 seconds. Then return the throttle lever to the usual position for starting, switch on the ignition, and try again to start the engine.

Oil Pressure Gauge

The small dial at the left-hand end of the instrument board (Fig. 6) is the oil pressure gauge. This gauge indicates, *not the quantity of oil in the engine*, but the pressure under which the oil is forced to the engine bearings.

When the engine is not running, the pointer on the oil gauge should remain at zero, but as soon as the engine is started and as long as it runs the gauge should show pressure. If the gauge does not show pressure when the engine is running, stop the engine at once and determine the cause. Serious damage may be done if the engine is run without oil pressure. (See page 53 under "Oil Pressure.")

The amount of the pressure indicated by the gauge depends upon the speed of the engine and the viscosity of the oil. At idling speed with fresh oil of the correct viscosity, the pressure after the engine is warm should be 7 to 10 lbs. Before the engine is warm, higher pressures than those specified will be indicated. After the oil has become thin from use, lower pressures than those specified will be indicated. These are normal variations from the standard and do not indicate need for attention.

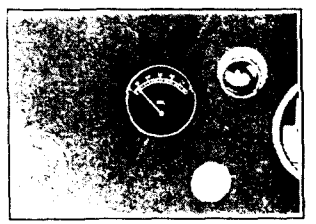

Figure 6. The oil pressure gauge does not show how much oil is in the engine—it shows pressure only. The pressure at idling speed should be 7 to 10 pounds.

Clutch Pedal

The clutch pedal is the left-hand pedal. When this pedal is in its normal or released position, the clutch is engaged, and the flywheel of the engine is then coupled to the transmission. When the clutch pedal is pushed down, the clutch is disengaged, and the flywheel, if the engine is running, revolves independently of the transmission.

The clutch has two uses: First, to enable the car to be started gradually and without jerk or jar; second, to permit shifting of the transmission gears. The operation of the clutch pedal is discussed in connection with the transmission control on page 16. Further comment is unnecessary at this point except the following suggestions to the driver:

Do not drive with the foot resting on the clutch pedal. The Cadillac clutch operates so easily that even the weight of the driver's foot may unintentionally cause the clutch to slip.

Do not form the practice of disengaging the clutch whenever the brakes are applied. Most occasions for use of the brakes require only slowing down without stopping or even shifting of gears. A skilled driver will not touch the clutch pedal until the car is just about to stop or until he is about to shift to a lower gear. It is a mistaken idea that applying the brakes with the clutch engaged is more severe on the brake lining. The opposite is

actually the case, proof of which is in the fact that in coasting down grades the resistance of the engine is used to assist the brakes in controlling the car speed.

It will be observed in operating the clutch pedal that the pedal offers almost no resistance until it has been moved about one inch. It is at this point that it actually begins to disengage the clutch. It is important that the pedal have this "lost motion." If the full pressure of the clutch springs is felt just as soon as the pedal is moved from its released position, necessity for adjustment of the pedal connections is indicated. Failure to make this adjustment will result in the clutch slipping. (See page 95.)

Transmission Control

The Cadillac transmission has three forward speeds and reverse. It is controlled by a lever, the handle of which describes the letter "H" as it is moved from one position to another. It should be observed by those who have driven other makes of cars, that, although most cars have the conventional H-type of transmission control, all of these cars do not have the same positions of the lever. The driver should study Fig. 7 carefully, and if the various positions of the lever are different from those to which he has been accustomed, he should master this arrangement before attempting to drive.

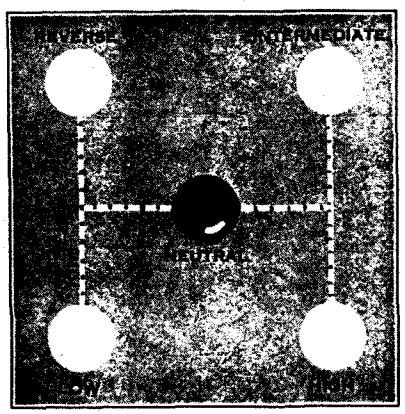

Figure 7. The positions of the transmission control lever form the letter "H".

No attempt can be made here to teach the beginner the technique of gear shifting. The beginner should secure individual instruction from the distributor or dealer from whom the car was purchased and who will be glad to give this instruction. The following suggestions, however, may be of assistance.

Before shifting from neutral to low to start the car, wait a few seconds after disengaging the clutch in order to give the gears a chance to stop "spinning." The faster the idling speed of the engine the longer it will take for the gears to come to rest. For this reason it is best to have the throttle lever set as near the closed position as possible without stalling the engine.

When shifting up, from low to intermediate or from intermediate to high, there should be a short period of hesitation in neutral before completing the shift. This period will be shorter or longer according to the speed of the car when the shift is made. It is necessary to learn from practice just how long to wait.

When shifting back from high to intermediate there should be no hesitation whatever in neutral. The lever should then be moved as quickly as possible and the car should not be traveling faster than 15 miles per hour.

There are times when it is desirable to be able to shift from high to intermediate at higher car speeds. It is possible to do this by the following method which is called "double de-clutching":

Disengage the clutch and shift the transmission control lever at once to neutral. Re-engage the clutch, at the same time accelerating the engine; then disengage the clutch again and instantly shift to intermediate; after which re-engage the clutch. The speed to which the engine should be accelerated while the transmission control is in neutral depends upon the speed at which the car is traveling when the shift is made.

It is not recommended that the driver attempt the double de-clutching method until he has become expert in shifting from high to intermediate in the usual manner at lower speeds.

Make a practice of shifting the transmission control to intermediate or even to low before commencing the descent of steep grades. The reason for this is explained on page 21, where will also be found further suggestions for coasting.

Do not make any of the following shifts when the car is moving:

From reverse to any forward gear.

From any forward gear to reverse.

From high gear to low gear.

From intermediate to low gear (except when the car is moving very slowly.)

Brakes

The foot brakes, which consist of external brake bands on the rear wheels and internal bands on the front wheels, are operated by the right-hand pedal.

This pedal differs from the conventional brake pedal in a construction that provides automatically for notifying the driver when re-adjustment of the brakes is necessary. Every driver is familiar with the fact that, as the brake lining wears, the brake pedal must be pushed further toward the floorboard to apply the brakes.

The Cadillac brake pedal has two stages in its travel. The first stage, which consists of the first four or five inches of the pedal travel, is sufficient for all ordinary stops when the brake band clearance is properly adjusted. When, as the result of wear on the lining, the pedal must be pushed farther toward the floorboard, the second stage of pedal travel is reached, an inch or inch and a half from the floorboard. In the second stage, the pedal has somewhat less leverage than in the first stage and the point of division is marked by increased resistance to movement of the pedal. This serves as a notice to the driver that the brakes require readjustment. If it is not convenient to have the adjustment made at once, the brakes can still be operated for some time. The adjustment should be made, however, as soon thereafter as possible.

The hand brakes, which are internal brakes on the rear wheels, are operated by the hand lever at the right of the transmission control lever.

Speedometer

The speedometer has three dials. The upper dial indicates the speed of the car. The center dial indicates the total mileage traveled. The lower dial also indicates mileage, but it can be reset to zero by pushing up and turning the knurled stem back of the instrument board. The right-hand figure on the lower dial indicates tenths of a mile.

Across the speedometer cover glass and below the total mileage dial is a strip of black celluloid on which are two white spaces. These spaces are for the lubrication notice described on page 49 in connection with the lubrication schedule.

An automobile repairman should never be permitted to attempt to adjust or repair the speedometer head or to replace the glass. This work can be done only by men experienced in speedometer work and only with special machinery and tools. If the speedometer head is removed, handle it as carefully as a fine watch. The speedometer head may easily be damaged by rough handling.

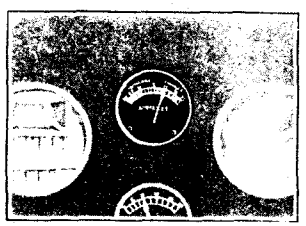

Figure 8. The ammeter indicates the amount of electric current flowing to or from the battery.

Ammeter

The upper dial in the center of the instrument board (Fig. 8) is the ammeter, which measures the electric current flowing to the battery and the current flowing from the battery at all times except when the starter is cranking the engine. When current is flowing from the battery, the ammeter shows a reading on the side marked "Discharge"; when current is flowing to the battery, the ammeter reading is on the "Charge" side.

The ammeter should indicate on the "Charge" side most of the time. Otherwise, more current will be taken out of the battery than is put into it and the battery will eventually become fully discharged. The exact amount of current that should be indicated by the ammeter at any time depends upon various conditions, which are explained on page 81.

Ordinarily, when no lights are in use, the ammeter should show "Charge" as soon as the car is running ten or twelve miles per hour in high gear. If the ammeter should indicate "Discharge" with all lights off, either when the engine is not running or when the car is running more than twelve miles per hour in high gear, the cause should be investigated.

Lighting Switch

The lighting switch control is at the upper end of the steering column in the center of the steering wheel. The lever has three positions besides "Off." These positions are marked respectively: "Parking," "Down" and "Up." The corresponding combinations of lights are as follow:

Parking—Parking lights and rear lamp.
Down—Headlamp lower beams and rear lamp.
Up—Headlamp upper beams and rear lamp.

The instrument lamps are controlled separately by the right-hand of the two small buttons at the extreme left of the instrument board. To light the lamps, pull out this button.

The headlamp bulbs have two filaments, one above the other, instead of a single filament. Both filaments are of the same candlepower (21), but because they are located in different positions with respect to the reflector, the beam of light from one filament is projected at a different angle from the other. When the switch lever is at "Up," one set of filaments is lighted and the beams are projected straight ahead, illuminating the road at a distance. When the lever is at "Down," the other filaments are lighted and the beams are projected down at an angle, illuminating more brightly the road directly in front of the car.

The practice to be followed by the driver in using this double-beam feature of the headlamps will depend upon local regulations. In general, it is expected that the upper beams will be used except on the following occasions: When passing a vehicle approaching from the opposite direction, when rounding a sharp curve, and when topping the crest of a hill. On these occasions and at other times when illumination is desired directly in front of the car, the lower beams should be used. For a further description of the headlamps, see page 91.

CHAPTER II

Driving

THE preceding chapter of the Manual has aimed to familiarize the driver with the controls and instruments used in operating the car. Actual skill in driving is, of course, more than knowledge of and familiarity with these individual devices. It is not the purpose of this Manual to discuss all phases of driving, but there are a few matters of sufficient importance to Cadillac owners to warrant devoting a chapter to them.

Driving Speed When Car Is New

The parts of the Cadillac car are machined or ground to secure the most accurate fit and the finest finish. Proper functioning of the assembled mechanism is further assured by testing the engine and chassis, both on shop dynamometers and on the road. Nevertheless, it is not possible by manufacturing processes and tests to give to bearing surfaces the fine polish that results from continued operations at moderate speeds and loads.

Until a new car has been driven far enough to produce this effect on the bearing surfaces, the car should not be driven at high speeds. Moderate driving during the first five hundred miles will increase the life of the car more than enough to repay any inconvenience. Manufacturers of locomotives and stationary steam engines have always recognized the necessity for an initial "running in" period.

Danger of Running Engine in Closed Garage

Every person having to do with the operation or care of a motor car should be warned of the danger that attends running the engine while the car is in a small closed garage.

Carbon monoxide, a deadly poisonous gas, is present in the exhaust of all internal combustion engines. Most people are already familiar with carbon monoxide in the form of illuminating gas, or in the gas produced by furnaces and stoves when insufficient air is supplied to give complete combustion. But illuminating gas and coal gas have an unpleasant odor, which serves as a warning, whereas carbon monoxide, as produced in the internal combustion engine, is colorless, tasteless, and almost odorless, so that the victim may be overcome before he is aware of the danger.

When the engine exhausts into the open air, the carbon monoxide is so diluted that it has no effect. It is when the engine is run for a time in a closed room that the proportion of carbon monoxide in the air may increase to the point at which continued breathing of it would be fatal. The United States

Public Health Service advises that the average automobile engine warming up in a single-car garage will give off enough carbon monoxide in three minutes to endanger life.

Unusual precaution must be taken in cold weather when the natural tendency is to keep the garage doors and windows closed. The practice of letting the engine warm up before running the car out of the garage is unsafe. The risk is made greater by the fact that the enriching of the mixture by manipulation of the carburetor enriching device increases the amount of carbon monoxide formed.

High Compression Cylinder Heads

Some Cadillac cars are equipped on special order with what are known as "high compression" cylinder heads. These are cylinder heads in which the space into which the fuel mixture is compressed just before it is ignited is so proportioned that a higher pressure is obtained than with standard cylinder heads. High-compression cylinder heads can be identified by the letters "HC" enclosed in a circle cast on the outer surface of the heads.

High-compression cylinder heads enable the engine to develop slightly more power but they can be used only with anti-knock fuel (except at high altitudes). The owner of a car equipped with these heads must therefore understand this limitation and arrange his fuel supply accordingly.

If, in an emergency, anti-knock fuel is not available and it is necessary to use regular fuel, this can be done but it is necessary to retard the spark to prevent spark knock. The use of regular fuel with high-compression heads should be resorted to only in an emergency or at high altitudes.

An engine with high-compression cylinder heads also requires special ignition timing. This is understood at Cadillac service stations; if it should ever be necessary to have the ignition timing checked elsewhere, instructions should be given to time the spark to take place ½ inch (on the flywheel) ahead of center when the manual control is fully advanced.

Coasting

To coast *on the level*, simply release the accelerator pedal and disengage the clutch. If coasting to a stop, the transmission control may also be shifted to neutral and the clutch re-engaged.

In coasting *down grades*, however, it is recommended that the transmission be left in gear and the clutch engaged. With the throttle in the idling position, the car is thus made to drive the engine, the resistance of which assists the brakes and saves wear on the brake lining. It must be remembered that the brakes are subjected to much more severe use on grades than on the level

because gravity acts continuously, whereas on the level the brakes need absorb only the momentum of the car. Even on slight grades, coasting with the transmission in neutral or the clutch disengaged is not advisable. On any grade steep enough to warrant coasting, it is worth while to save the brakes as much as possible by utilizing the braking effect of the engine.

Ordinarily, the resistance offered by the engine when the transmission is in high is sufficient to control the speed of the car, supplemented by moderate use of the brakes. On steep grades, however, the transmission control should be shifted to intermediate or even to low if the grade is very steep. Shifting should always be done before commencing the descent of the grade, because, after the car has once gained speed, considerable braking may be necessary to slow down to the speed at which the shift can be made easily.

Do not switch off the ignition when coasting with the car driving the engine. Contrary to a common impression, this does not appreciably increase the resistance and is likely to cause damage to the engine. Even with the throttle closed, some fuel is admitted to the cylinders, and if this is not burned it condenses on the cylinder walls and washes off the oil by which the pistons are lubricated.

General Driving Suggestions

Road and traffic laws vary greatly in different localities. It is unfortunately impossible to set down a complete list of rules that may be followed in all parts of the country. The following are some of the rules that are universal in practically all parts of the United States.

In meeting a vehicle going in the opposite direction pass to the right.

In overtaking a vehicle going in the same direction pass to the left.

Always stop with the right-hand side of the car next to the curb. If it is necessary to turn the car around to do this, it should be done.

Never turn around or turn off on another road without making absolutely certain that there is no other vehicle directly behind.

Never start to cross street car tracks without making sure that there is no car directly behind. No matter how sure you feel, look and see.

Do not cross street car or steam railroad tracks without making certain that it is absolutely safe to do so. At any railroad crossing that is on an upgrade or which for any reason must be approached very slowly, it is a wise precaution to shift to intermediate gear before crossing, because the car can thereby be accelerated more quickly, if necessary.

In crowded traffic do not apply the brakes suddenly unless it is absolutely necessary. A vehicle following may not have brakes as efficient as Cadillac four-wheel brakes.

On wet asphalt streets or slippery roads do not apply the brakes suddenly unless it is absolutely necessary. Cadillac four-wheel brakes minimize the possibility of skidding under these conditions, but their effectiveness should not induce anyone to drive less carefully.

Slow down in passing vehicles going in the opposite direction.

Never take a chance.

Don'ts for General Operation

Don't fail to change the engine oil as frequently as recommended.

Don't fail to release the carburetor enriching button as soon after starting as possible.

Don't fill the lubricating system of the engine alone and neglect to lubricate all other parts of the car.

Don't neglect the lubrication of any part of the car.

Don't run the car at sustained high speed when it is new.

Don't allow the clutch to engage suddenly.

Don't prime the carburetor too much.

Don't allow the vent hole in the gasoline tank filler cap to become stopped up.

Don't attempt to shift from neutral to any gear, or from one gear to another gear without first disengaging the clutch.

Don't attempt to shift from the reverse gear to any other gear when the car is moving.

Don't attempt to shift from any forward gear to the reverse gear when the car is moving.

Don't attempt to shift from the high gear to the low gear when the car is moving.

Don't attempt to shift from the intermediate gear to the low gear when the car is moving, unless it is moving very slowly. Ordinarily it is best to stop the car altogether.

Don't switch off the ignition when coasting with the car driving the engine.

Don't push the starter pedal when the engine is running.

Don't turn the steering gear when the car is standing. This is not only unnecessary but is also bad practice. The front wheels pivot more easily if they are rotating.

Don't fail to investigate any unusual sound which may develop in the car. The car should be regularly inspected at a Cadillac service station.

Don't neglect to inspect the level of the acid solution in the storage battery every 1000 miles, and in summer, at least every two weeks, and add distilled water if necessary. *Never add anti-freeze to the battery.*

Don't turn corners at high speed.

Don't neglect to keep the cooling system filled to the recommended level (page 42).

Don't drive fast or attempt to stop suddenly on wet pavements.

Don't attempt to start the engine with the switch turned off or without gasoline in the tank.

Don't neglect to keep the tires inflated properly.

Don't race the engine when it is not driving the car. There is no worse abuse.

CHAPTER III

Equipment

THE controls and instruments used in driving have already been described. In addition to these, the car is equipped with various devices which are for the convenience and comfort of the occupants, and are used only as occasion demands. It is suggested that the driver anticipate his use of such equipment by becoming familiar at once with the directions contained in this chapter.

Driver's Seat

On all cars except those that are intended to be chauffeur-driven, the back of the driver's seat can be adjusted either backward or forward to accommodate the driver. This adjustment is controlled by the handle which is on top of the back of the seat. To move the seat forward, turn the handle clockwise; to move it backward, turn the handle counter-clockwise.

Windshield

Closed Cars—Cadillac closed cars are equipped with a one-piece windshield, which can be moved up and down. Movement of the glass is controlled by a handle above the windshield. To raise the glass, the handle should be turned clockwise, and to lower the glass the handle should be turned counter-clockwise.

For ventilation under the cowl, the windshield should be raised not more than one inch so that the lower edge of the glass is still below the ledge

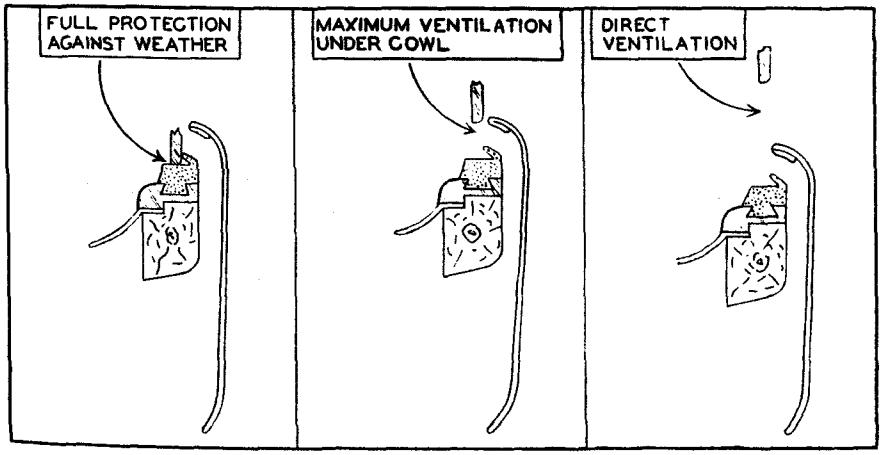

Figure 9. The closed car windshield has three positions: the position shown in the center is best for warm weather.

over the instrument board. With the windshield in this position, air is deflected into the driving compartment through an opening in the cowl just forward of the instrument board. If desired, the windshield can be raised above the level of the ledge over the instrument board, and air will then enter directly into the car. In this position, however, less air is forced down under the cowl.

Open Cars—The open car windshield is in one section, which is pivoted at the lower corners. To fold the windshield outward, loosen the wing nuts and tighten them again after the windshield is in the desired position.

Cowl Ventilators

Ventilation on the open cars is provided by two ventilators in the top of the cowl. These are operated by levers just in front of the instrument board.

Cowl ventilators are also provided on the closed cars to supplement the ventilation provided by the windshield. These ventilators are at the sides of the cowl compartment and open toward the rear, serving as outlets for the air entering under the windshield.

Windshield Cleaner

The windshield cleaner is operated by the suction or vacuum in the passages between the carburetor and the engine.

On closed cars the cleaner is controlled by the knurled button at the extreme left-hand end of the instrument board. When the button is turned clockwise as far as it will go, the cleaner is shut off. To start the cleaner, turn the button counter-clockwise.

On open cars the control button is located at the cleaner itself.

Rear Vision Mirror

The rear vision mirror may be adjusted by the driver to suit his preference after loosening the clamp screws that hold the mirror to its supporting bracket.

Cigar Lighter and Inspection Lamp

The car is equipped with a combination cigar lighter and inspection lamp that makes use of a single reel with twelve feet of flexible cord attached to the back of the instrument board. The flexible cord ends in a bayonet type socket to which may be attached either the inspection lamp or the heating element of the cigar lighter. The method of attachment is identical with

that of an ordinary lamp bulb. Ordinarily the cigar lighter will be carried in place in the socket on the cord and the inspection lamp in a stationary socket provided on the front of the dash, where it is useful to illuminate the engine. (The inspection lamp is packed with the tool equipment when the car is shipped.)

To use the cigar lighter, pull it out from the instrument board at least a foot, wait a few seconds for the heating element to heat and apply it to the cigar or cigarette. The current is automatically switched on as soon as ten or twelve inches of the cord have been unreeled. To light a pipe, remove the nickel-plated shield by turning it slightly counter-clockwise and pulling it straight off.

To lock the cord in any desired position, pull out the button on the instrument board at the right of the cigar lighter (Fig. 1). This engages a ratchet which prevents the reel from rewinding. To rewind the cord, press the button back to its original position.

The inspection lamp socket on the dash has a double bayonet lock with two sets of slots. To install the lamp, simply insert it in the socket, press in, and turn it clockwise as soon as the pins on the lamp engage the first or outer set of slots. In this position the current is not switched on. To switch the current on, turn the lamp slightly counter-clockwise, press in, and turn it clockwise again, engaging the pins in the second or inner set of slots. To switch off the light, turn the lamp counter-clockwise and pull it out of the socket far enough to engage the first set of slots.

Clock

The clock has an eight-day movement and is wound and set in the same manner as a watch. The stem is under the clock back of the instrument board.

Top and Side Curtains

Top

Illustrated directions for folding and raising the top on open cars are given in Fig. 10.

Side Curtains on Open Cars

The side curtains, with which the open cars are equipped, are carried in an envelope provided with cloth partitions to prevent rubbing and chafing. The side curtains on the Touring Car are stowed under the front seat. On the Phaeton and Roadster, they are stowed in a special compartment back of the front seat.

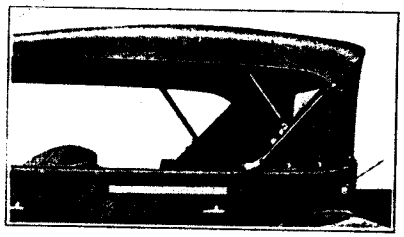

Figure 10a
Remove the caps indicated by the arrow.

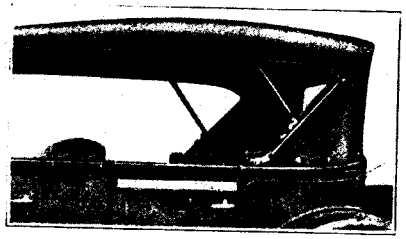

Figure 10b
Install the top supports by pushing them into the sockets and tightening the small cap screws. The supports appear like this when properly in place.

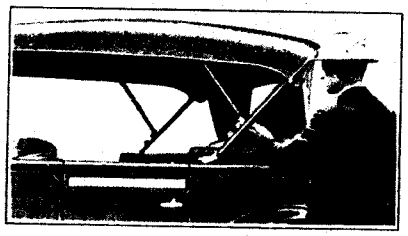

Figure 10c
Detach the side quarter curtains from the bow sockets and fold the curtains back against the rear curtain.

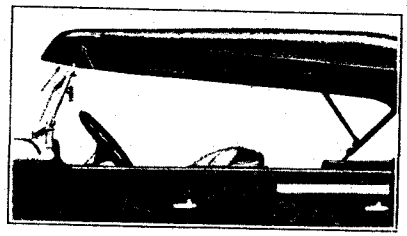

Figure 10d
Unscrew the thumb screws over the windshield supports and push the top up so that the clamps are free from the supports.

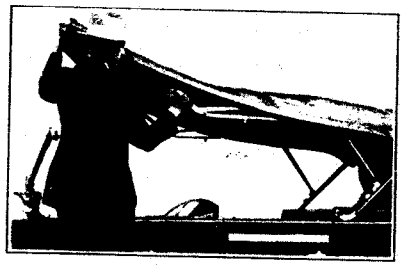

Figure 10e
Stand on the running board and pull down on the front bow socket just ahead of the joint, at the same time pushing the front part toward the rear.

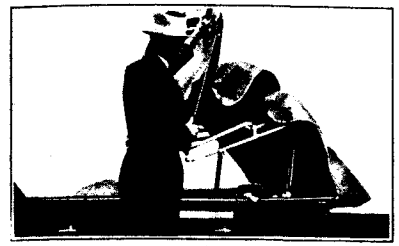

Figure 10f
Fold the top back, allowing the upper fabric or deck to fall back clear of the bows.

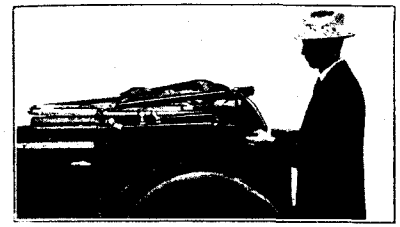

Figure 10g
Tuck the deck down under the bows, carefully smoothing out the material between the bows.

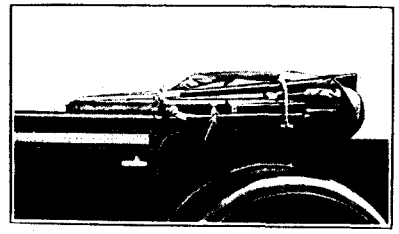

Figure 10h
Make sure that the hooks (see arrow) engage the slotted brackets on the rear bow sockets. Fasten the bows down to the supports with the clamps as illustrated.

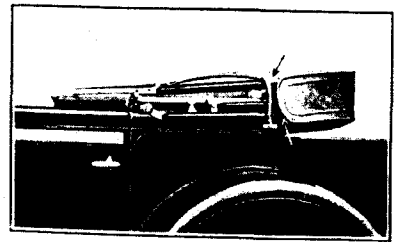

Figure 10i
Draw the dust boot over the folded top. It is secured by four straps (see arrows) at the open corners. These straps should be fastened around the bows and pulled tight to keep the boot smooth. The boot should look like this when properly strapped in place.

To raise the top, remove the dust boot and unfasten the support clamps. Then stand in the tonneau and lift up the front bow. Pull the top up and over, making sure that the joints in the front bow close on both sides. The front end of the top will then be directly over the windshield as in Fig. 10d. Attach the clamps to the windshield supports and tighten the thumb screws. Re-fasten the side quarter curtains to the rear bow sockets.

Figure 10. Folding and Raising Top.

The Touring Car and Phaeton curtains are in six sections, each of which is marked to indicate its position, as "Left Front," "Right Center." The front and center sections on both sides are each provided with a rod, the lower end of which fits in a socket in the top of the door. When a curtain is folded for stowing, this rod is parallel with the bottom of the curtain as shown in Fig. 11.

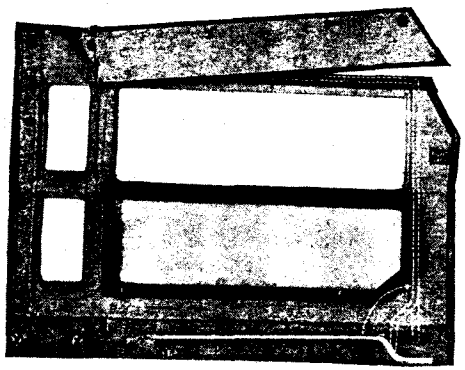

Figure 11. Side Curtain

Before the curtain can be attached to the door, the rod must be moved to the position shown by the dotted lines. The upper end of the rod is slotted to engage with the stiffener that runs along the upper edge of the curtain.

The folding flap on the door curtains has the upper rear corner cut off diagonally. This is to permit its being tucked through on the outside when the flap is closed. By tucking the flap this way, the wind is prevented from blowing in at the rear of the flap.

The rear sections should be applied first, followed by the center and front sections. The rear sections should be fastened to the rear bows under the side flaps of the permanent rear curtains.

Before stowing the curtains, they should be dry and clean.

Curtain Fasteners

The curtain fasteners used on the top and side curtains are of three different types. The type used on the side curtains at the points where they fasten to the body is illustrated in Fig. 12b. To release this type of fastener, press in on the small plunger or button in the center of the fastener.

At other points the fastener illustrated in Fig 12a is used. When this type of fastener is snapped on its stud, it becomes locked on three sides, To release the fastener it must be lifted on the side that is not locked. This side is indicated by the small projection to which the arrow points in Fig. 12a. This type of fastener cannot be released by lifting it at any other side.



Figure 12. Three types of fasteners are used on the top and side curtains. The way to unfasten each is shown above.

The remainder of the fasteners used on the top and side curtains are of the usual glove type (Fig. 12c.)

Tools

The compartment for the tool equipment is between the left-hand running board and the frame, and is accessible upon opening a door in the left-hand dust shield. The tools are carried on the left-hand rather than the right-hand side of the car because the battery must be carried on the right-hand side to be as near the starter as possible. The lock on the tool-box door is operated by the same key as the ignition lock.

To reach the tools proceed as follows: Insert the key and turn it counter-clockwise, at the same time pressing in on the lock. As soon as the lock is released it will spring out as shown in Fig. 13.

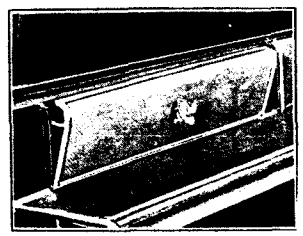

Figure 13. The tool box door is unlocked with the same key as the ignition switch.

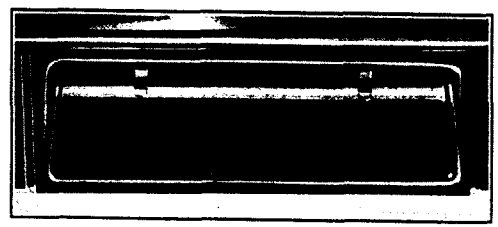

Figure 14. A retaining rod holds the inner cover of the tool box in place.

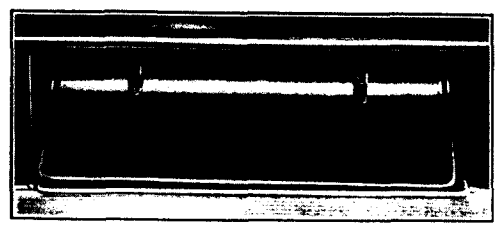

Figure 15. The inner cover can be removed after the retaining rod is dropped down.

Pull the lock out as far as it will go. This will release the catches and permit the door to be tilted out at the top. As soon as the catches are clear of the top edge of the opening in dust shield, remove the door by lifting it up.

The tools are contained in an inner box which is held in place by the rod shown in Fig. 14. Force this rod out of the depressions in the handles on

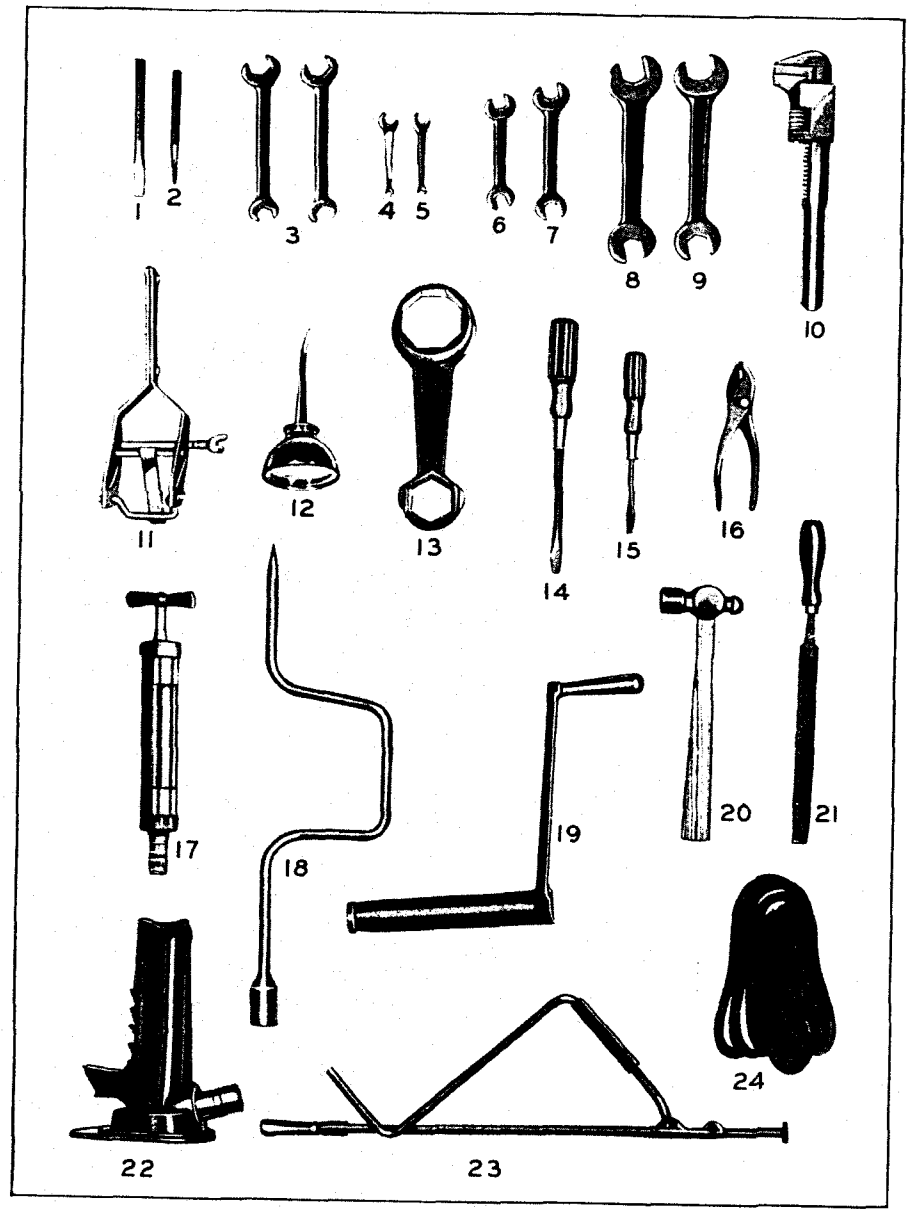

Figure 16. The standard tool equipment. The names and uses of the tools are given on page 33.

the cover of the box, and let the rod drop to the position shown in Fig. 15. The cover of the box may then be removed by means of the two handles.

The door of the battery compartment operates in the same manner as the tool compartment.

The following are the tools comprising the standard equipment. The numbers refer to the numbers by which the tools are designated in Fig. 16. Items listed opposite Nos. 25, 26, 27, and 28 are not illustrated.

1. Cold chisel
2. Center punch
3. Open end wrenches (two) for adjusting rear foot brakes
4. Distributor wrench (with gauge for adjusting timer contact points and spark plugs)
5. Distributor wrench (plain)
6. Open end wrench $\frac{7}{16}$–$\frac{1}{2}$
7. Open end wrench $\frac{9}{16}$–$\frac{5}{8}$
8. Open end wrench $\frac{3}{4}$–$\frac{15}{16}$
9. Open end wrench $\frac{7}{8}$–$1\frac{1}{8}$
10. Monkey wrench
11. Rim Tool
12. Oil can
13. Hub cap wrench
14. Large screw-driver
15. Small screw-driver
16. Pliers
17. Grease gun
18. Wrench for rim clamping nuts
19. Hand starting crank
20. Hammer
21. File
22. Jack
23. Jack handle
24. Hose for tire air compressor
25. Inspection lamp. Note: The inspection lamp is packed with the tool equipment when the car is shipped but is ordinarily carried in the socket provided for it on the dash.
26. Tool bag
27. Lubrication chart
28. Operator's Manual.

Tires

Tire Valve Caps

The valve caps used with some makes of tires are a combination dust and valve cap. This type of cap can be removed and installed without screwing the cap the entire length of the threads on the valve stem.

To remove one of these valve caps, turn it two or three turns counterclockwise. This loosens the sliding nut inside the cap (Fig. 17). Next, pull the cap up as far as it will go. Then remove the cap by unscrewing it the rest of the way.

To install a valve cap, place the cap over the valve stem and turn it a few turns clockwise to engage the threads in the sliding nut. If the sliding nut is too far inside the cap to be reached by the valve stem, shake the nut down by tapping the bottom of the cap on some solid object. When the valve stem has been started in the sliding nut, push the cap down over the stem as fas as it will go. Then turn the cap until it locks tightly.

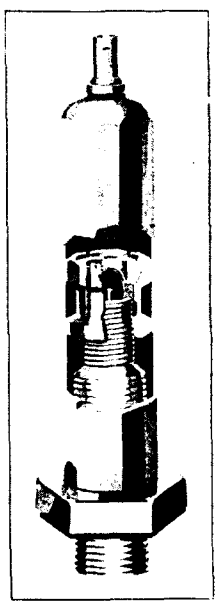

Figure 17. Tire valve cap.

Inflation Pressure

For normal driving, the 32 by 6.75 low pressure tires, which are standard equipment on Cadillac cars, thould be inflated to a pressure of 40 lbs. per square inch. The inflation pressure should be checked at least weekly and should not be permitted to drop more than 5 lbs.

On cars driven at high speeds, the front tires should be inflated to 50 lbs. or higher if necessary. *This is important.*

Tire Air Compressor

To use the tire air compressor with which the car is equipped, proceed as follows:

Turn back the left-hand side of the front carpet and lift the small oval-shaped cover which is in the floor just to the left of the transmission control lever. Reach through the hole in the floor and remove the knurled cap from the connection on top of the compressor. Connect one end of the air hose (in the tool equipment) to this connection and the other end of the hose to the valve of the tire to be inflated. *Do not connect the hose to the tire first if there is pressure in the tire.*

The control shaft by which the compressor driving gear is placed in mesh with the transmission gears projects through a small hole in the floor just in front of the large hole over the compressor. To start the compressor, if the engine is running, disengage the clutch and hold the pedal down until the transmission gears have ceased to revolve. Then, with a screw-driver, turn the slotted head of the compressor control shaft clockwise. If the engine is not running, simply turn the control shaft clockwise without disengaging the clutch and then start the engine.

The compressor gives best results when the engine runs at a speed of approximately 1000 r. p. m., which is about three times the normal speed of the engine when idling. Do not race the engine in operating the compressor, or, for that matter, at any other time when it is not driving the car. Racing the engine beyond the recommended speed not only decreases the efficiency of the compressor, but is one of the worst forms of abuse. To stop the compressor, turn the control shaft counter-clockwise.

Do not turn the compressor control shaft to start the compressor when the engine is running and the clutch is engaged.

Tire Holder

The tire holder is designed to carry either one or two standard-size tires mounted on rims and inflated. Each rim has on it three lugs which are

located so as to engage with notches on the support arms and on the adjustable clamps. There are two sets of these notches in the support arms.

When two rims are carried, the rim nearest the car should be placed so that the side with the lugs is away from the car and the lugs should be inserted in the inner set of notches. The outer rim should then be placed so that the side with the lugs faces toward the car and the lugs of this rim should be inserted in the outer set of notches.

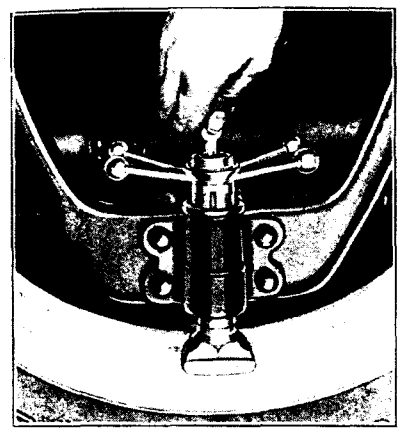

Figure 18. The spare rim and tire can be removed after unlocking the clamp and unscrewing it.

When only one rim is carried, the side of the rim with the lugs should face away from the car and the lugs should be inserted in the outer set of notches. This permits the rim to be clamped by the outer clamp.

The tire holder lock is in the upper end of the outer clamp screw and is protected by a dust cap which must be unscrewed to insert the key. Turning the key clockwise disengages the lock. permitting the clamp screw to be turned.

To lock the outer clamp, screw the clamp down firmly against the rim or rims. Adjust the clamp screw handle so that it points squarely across the car. Then turn the key counter-clockwise. Care should be exercised in removing or replacing a spare tire not to strike the body of the car.

Note: If a tire cover is used, it should have slots cut in it opposite the two upper lugs on the rim so as to permit these lugs to seat in the notches in the support arms.

Wire Wheel Carrier

To remove the spare wire wheel from the carrier, first unscrew the dust cap which protects the lock. Insert the key in the lock and turn it to the right. Then unscrew the large nut, using the hub cap wrench. The wheel can then be taken off the carrier.

When installing the wheel on the carrier, tighten the nut as far as it will go. Then insert the key and turn it to the left.

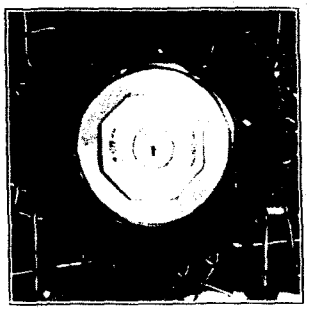

Figure 19. After unlocking the lock, the large nut holding the spare wire wheel can be unscrewed with the hub cap wrench.



Figure 20. The clamp over the spare disc wheel can be unscrewed by hand after it is unlocked.

Disc Wheel Carrier

To remove the spare disc wheel, unscrew the small dust cap and unlock the carrier by turning the key to the right. Then unscrew the large clamp, removing the large dust shield. The wheel can then be taken off the carrier after unscrewing the cap nuts by which it is fastened.

When installing a wheel on the carrier, tighten the clamp and lock it in place by turning the key to the left.

Lock for Spare Tires On Fenders

When the spare tires or wheels are carried on the fenders, a lock is provided for each wheel or tire. This lock is fastened to the fender and must be removed before the tire or wheel can be removed. To remove the lock, insert the key and turn it to the right. The lock can then be lifted out.

When mounting spare tires in fenders, they should be partly deflated before being put in the fender well, and should be fully inflated after they are in position. By following this method, a snug fit is secured, and the tires or tire covers are prevented from chafing.

Use of Jack in Changing Tires

When the tire is "flat," the axle is not far enough above the ground to permit placing the jack directly under the axle. It is then necessary to make use of the adjustable shoulder which engages with teeth on the side of the jack.

If a front wheel is to be raised, the jack should be so placed that the adjustable shoulder is under the bracket to which the shock absorber strap is attached. If a rear wheel is to be raised, the adjustable shoulder should be on top of the jack and the jack placed under the axle housing.

Changing Tires

If an inflated spare tire is always carried on the spare rim or wheel, the driver will seldom or never have to disassemble the tire from the rim. In case of tire trouble, it is then merely necessary to remove the rim or wheel with the flat tire and install the spare tire in its place. Illustrated directions for performing this work on wood, wire and disc wheels are given on pages 38, 39 and 40.

Disassembly of the tire from the rim is necessary only if the tire is to be repaired, or a new one installed. Directions for this work, which is usually left to the repair shop, will be found on page 104.

Truing Up Rim

If a rim does not run true, it may be trued up in the following manner: Rotate the wheel slowly and mark the part that runs farthest out from the face of the wheel. Loosen slightly the nuts diametrically opposite the mark and then tighten the nuts on the marked side. Test the wheel again and if it still does not run true repeat the operation.

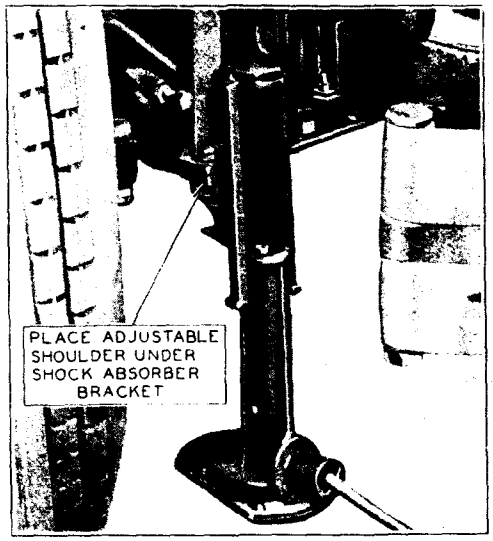

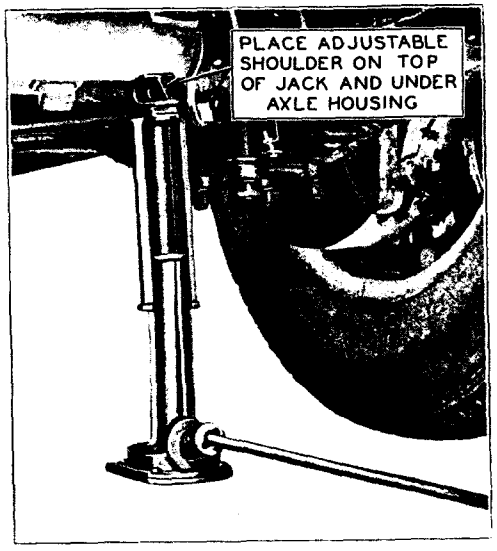

Figure 21. To jack up the car it is necessary to have the jack in the proper position under the axle. The correct position for the front axle is shown above and for the rear axle, below.

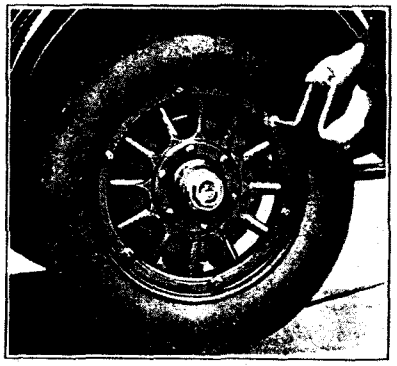

Figure 22a. Jack up the wheel until the tire clears the ground. Remove the dust cap and clamping nut from the valve stem. Remove the six rim clamps, unscrewing them with the brace wrench supplied in the tool kit.

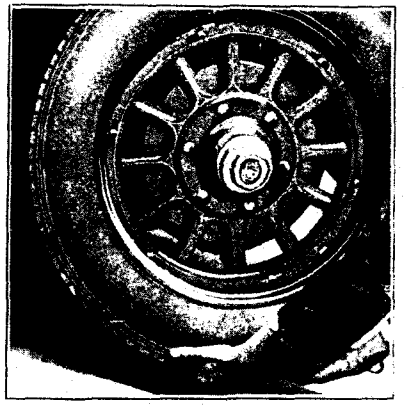

Figure 22b. Rotate the wheel until the valve stem is at the top, and pull the bottom of the rim away from the wheel.

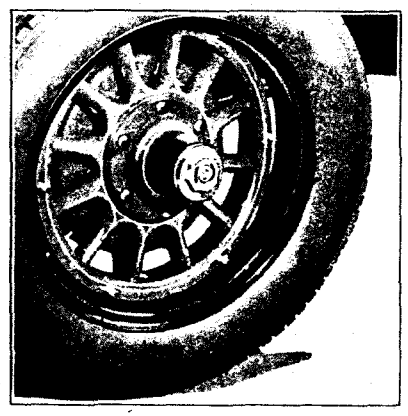

Figure 22c Then rotate the wheel until the valve stem approaches the bottom, when the rim and tire will roll free from the wheel and can be removed without lifting.

To mount a rim, rotate the wheel until the hole for the valve stem is in the position shown in the last illustration. Insert the valve stem and rotate the wheel, which will carry the rim with it, until the valve stem is at the top. Then push the lower part of the rim into place. Install the rim clamps over the rim and turn the nuts partly down. Go over the nuts again and tighten them fimly. Install the valve stem clamping nut and the dust cap. Be sure the clamping nut is tight.

Figure 22. Changing Rims (Wood wheels)



Figure 23a Jack up the wheel until the weight of the car is off it, but with the tire still dragging. Place the hub cap wrench on the cap with the cam lever lowered, engage the sliding barrel puller in the slots and turn the puller one quarter turn either way.

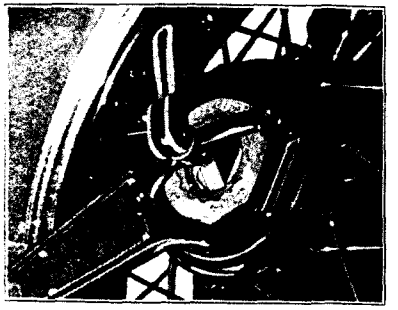

Figure 23b Raise the lever up and over, thus drawing out the sliding barrel of the hub cap. If the barrel does not withdraw easily, tap the end of the wrench back and forth. This will release the pressure on the teeth of the sliding barrel and allow it to disengage.

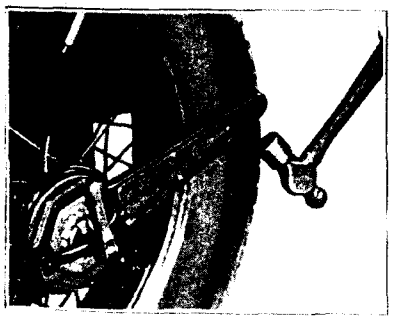

Figure 23c Loosen the hub cap by striking the wrench a few times with a hammer. (The hub caps are marked with arrows showing the direction in which they screw on and off.) Then jack up the wheel, unscrew the hub cap and pull the wheel off the inner hub. *Never attempt to remove the hub cap with the weight of the car on the wheel.*

In installing the wheel, see that it is set up snugly on the corrugations on the inner hub. Hub caps are marked either "Right Side" or "Left Side" and must always be installed on the proper side. Start the cap by hand, taking care not to cross the threads. Then apply the hub cap wrench and disengage the sliding barrel as directed above. Securely tighten the cap, striking the end of the wrench with a hammer a few times. Lift up the cam lever. If the sliding barrel does not automatically engage, tighten the cap farther.

Figure 23. Changing Wire Wheels

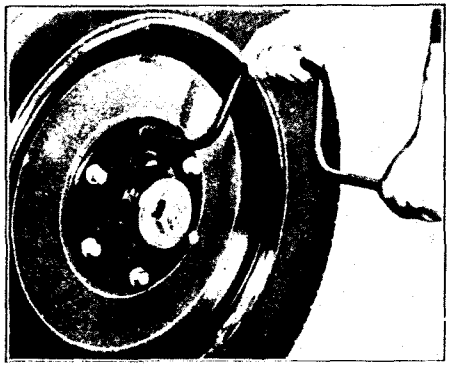

Figure 24a To remove a front wheel, jack it up until the weight of the car is off it, but with the tire still touching. Then loosen the cap nuts around the wheel hub with the brace wrench in the tool kit. Jack the wheel up further, unscrew the nuts and remove the wheel. In removing a rear wheel, set the hand brake and jack the wheel all the way up.

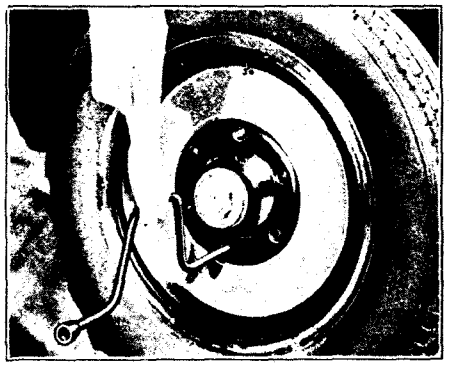

Figure 24b. In mounting disc wheels, use the rear end of the brace wrench as a pilot bar.

To mount a front wheel, bring it up close to the hub and pass the pilot bar through a lower hole and over a lower stud. Lift with the bar, and guide the wheel with the other hand. The weight of the wheel will keep the hub from turning, and the wheel will slip easily into place.

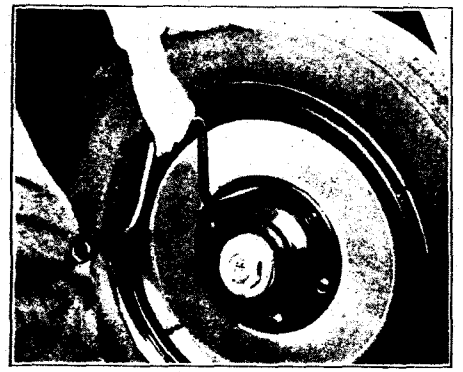

Figure 24c. To mount a rear wheel, set the hand brake and put the pilot bar through an upper hole and over an upper stud.

In either case, several nuts should be started by hand before the pilot bar is removed. The nuts should *not* be tightened in rotation. After tightening one nut, tighten the nut directly opposite. In this way the first two nuts center the wheel and insure a good fit. The nuts need not be as tight as they can be forced. They should be only moderately tight.

Figure 24. Changing Disc Wheels

CHAPTER IV

Cold Weather Operation

The Cadillac car is an all-season car and no owner need hesitate to make full use of his car in severe winter weather as well as at other times. Satisfactory operation in freezing weather, however, depends upon having the car prepared for cold weather and in giving it the special attention which is required at that time. In this chapter has been grouped all the information relating to care and operation of the car during cold weather. It should be reviewed just prior to the beginning of the winter season.

Preparing for Cold Weather

Anti-Freezing Solutions

In freezing weather, the water in the cooling system must be replaced with some solution that has a lower freezing temperature than that of water. A solution of denatured alcohol and water is recommended.

Before putting anti-freeze in the radiator, the cooling system should be thoroughly cleaned by flushing (see page 79). It is also important to inspect the hose connections and see that they are all in good condition, so that loss of anti-freeze by leakage will be avoided.

The strength of an alcohol solution must be periodically tested with a hydrometer. Alcohol vaporizes more rapidly than water and the loss by evaporation must be replaced at frequent intervals or the weakened solution will afford little protection against freezing. Care must also be taken not to let an alcohol solution get on the finish of the hood or radiator.

The following table gives the freezing temperature and specific gravity of solutions of denatured alcohol and water.

Lowest Temperature Expected	Per cent by Volume	Specific Gravity (at 60° F.)	Qts. Alcohol required to make 6 gals. solution
+10°F.	30	.9668	7¼
0°F.	38	.9567	9
−10°F.	45	.9485	10¾
−20°F.	51	.9350	12¼
−30°F.	57	.9260	13¾

Patented substitutes should not be used unless tested and approved. Cadillac distributors and dealers should be consulted as to the suitability of an anti-freeze or inquiry may be made to the factory Service Department. Solutions containing calcium chloride or other ingredients injurious to the metal parts of the cooling system must never be used.

Capacity of Cooling System

The capacity of the cooling system is five and one-quarter gallons when filled to the proper level. It is not necessary to add liquid to the radiator whenever the level falls below the filler. There is sufficient liquid in the cooling system if the upper tank is half full, and any liquid in excess of this is usually forced out through the overflow pipe as soon as the engine becomes warm. When water is used, any loss from this cause is of little consequence, but in winter to conserve anti-freeze it is important to avoid adding more liquid than is necessary.

Effect of Alcohol on Finish

Strong solutions of alcohol have a harmful effect on the finish. In adding pure alcohol or solutions containing 50 per cent or more alcohol, extreme care must be used not to let the liquid spatter or spill. A funnel and a pouring vessel with a suitable spout are necessary. Especially avoid pouring cold alcohol into very hot water. The effect of this is to make the mixture foam up and possibly bubble over on the finish.

Winter Lubrication

Lubrication of the car requires special attention in winter, not only to insure proper lubrication of the moving parts, but to secure the same ease of operation in starting, steering and shifting gears as during warmer weather.

Contrary to popular impression, this does not mean the use of special winter lubricants. The lubricants approved by Cadillac engineers and sold by Cadillac distributors are year-round lubricants. It is not necessary therefore, to change the engine oil or the lubricant in the transmission or rear axle when cold weather approaches. It is merely necessary to thin these lubricants with kerosene. Authorized Cadillac service stations are prepared with full information as to the amount to be added and the conditions under which it is to be added.

The temperature at which thinning of the engine oil is necessary depends upon the oil used, but with most of the approved oils, some kerosene should be added as soon as the temperature drops to freezing. From one to three

quarts of kerosene are necessary, one quart being plenty for temperatures around freezing while three quarts will be required at 10 below zero.

After the oil is once thinned, additional kerosene does not ordinarily need to be added until the engine oil is changed at the usual 2000-mile interval. The fresh oil must then be thinned. However, on a long hard drive some of the kerosene will be driven out by evaporation. After such a drive, kerosene should be added to replace that which has evaporated.

When thinning the oil in the engine a small amount of kerosene should also be added to the oil in the fan reservoir.

The lubricant in the transmission, rear axle and steering gear should also be thinned as soon as the weather is so cold that the transmission gears are hard to shift. If a sufficient amount of kerosene is added to provide for the lowest winter temperature expected, it will not be necessary to add kerosene again thereafter during the winter. If ten per-cent kerosene is added, this will take care of temperatures down to ten below zero.

Storage Battery

The electrical system of an automobile has much more to do in winter than in summer. The engine is harder to crank and must usually be cranked longer before it starts. The lights are also used to a much greater extent than during the long days of summer. All this means that the battery must be ready for increased demands.

It is therefore a good plan in preparing for the winter season to see that the battery is well charged to begin with, that the battery connections are clean and tight and that the charging rate of the generator is sufficient.

Gasoline System

The carburetor on the Cadillac engine has automatic compensation for temperature. Nevertheless it is a good plan to check the carburetor adjustment when cold weather arrives. This inspection should give special attention to the carburetor choke control to make sure that the enriching device at the carburetor is fully effective when the choke button is operated.

In warm weather a small amount of water in the gasoline has little or no effect on the running of the engine. In freezing weather, however, even a small amount of water may freeze and stop the entire flow of fuel to the carburetor.

One of the things to be done in preparing for winter weather, therefore, is to clean the gasoline filter and the sediment chambers in the gasoline system. (See page 74.)

Starting the Engine

Carburetor Enriching Button

The first difference between starting the engine in cold weather and starting the engine in warm weather is in the greater use of the carburetor enriching device necessary in cold weather. Gasoline does not vaporize as readily at low temperatures, and in order to supply the cylinders with a gaseous mixture rich enough to be ignited, the proportion of liquid gasoline to air must be increased.

At the same time it is important not to apply the enriching device more than is necessary. The unvaporized gasoline collects on the cylinder walls and works down past the pistons, washing off the lubricant as it goes. Although dilution of the oil supply with this unburned gasoline is minimized in the Cadillac engine by an exclusive system for ventilating the crankcase (see page 54), it is best to avoid an excess of liquid gasoline in the combustion chambers by careful and judicious use of the enriching device.

The following rule should govern the use of the enriching button in winter weather: Pull the enriching button back just as far as it is necessary to start the engine, but as soon as the engine starts, let the button return as far as possible without causing the engine to stop or slow down. Then release the button entirely as soon as the engine is warm enough to permit doing so.

In cold weather it is also a good plan to pull out the enriching button just before switching off the ignition to stop the engine. This will make it easier to start the engine.

Priming the Carburetor

In extremely cold weather, if the engine does not start after cranking for a few seconds with the enriching device fully applied, release the starter pedal. Then prime the carburetor by opening and closing the throttle once or twice rather rapidly with the accelerator. Opening and closing the throttle operates a throttle pump on the carburetor and raises the level of gasoline in the carburetor bowl. The carburetor should never be primed in warm weather and should not be primed unnecessarily in cold weather. *Excessive* priming is likely to make starting difficult rather than easy.

Position of Throttle Hand Lever

The correct position of the throttle hand lever for starting in cold weather is the same as for starting under other conditions, that is, about one-fourth

the way down from the idling position. In warm weather, however, the lever may be returned to the idling position almost as soon as the engine is started. In cold weather, the throttle must be left slightly open until the engine becomes warm.

Position of Spark Control Lever

It is the practice of some drivers to move the spark control lever all the way to "Retard" whenever starting the engine. This is the correct position if the engine is to be cranked by hand, but if the engine is to be cranked with the starter, there is no reason for retarding the spark, and in extremely cold weather "popping back" in the carburetor is less likely to occur if the spark is fully advanced.

Use of Starter

In extremely cold weather, when the car has been standing long enough to become thoroughly chilled, it is a good plan to disengage the clutch during the cranking operation. If this is not done, the starter is called upon to turn the jackshaft gears in the transmission in addition to cranking the engine. At ordinary temperatures, the additional energy required is negligible, but in extremely cold weather, the lubricant in the transmission offers sufficient resistance to rotation of the transmission gears to increase considerably the demand upon the battery and to retard the cranking speed.

Use of Accelerator Before Engine Is Warm

In cold weather, after the engine has been started and before it has run long enough to become warm, the engine cannot deliver its normal power and it should not be called upon to do so. In accelerating the engine to start the car and in accelerating the car after the transmission is in gear, do not open the throttle suddenly or too far. To do so is not only to invite "popping back" in the carburetor, but to increase the amount of excess unvaporized gasoline in the combustion chambers, both of which results are undesirable. For this reason, also, starting in intermediate should never be attempted in cold weather.

PART II

LUBRICATION AND CARE

CADILLAC LUBRICATION SCHEDULE

OWNER'S NAME_____

ADDRESS_____

ENGINE NO._____ DATE DELIVERED_____

Do not wait for schedule lubrications before adding engine oil. The oil level should be checked every 100 to 150 miles and oil added if the indicator ball is below "Full." This is especially important on cars driven at high speed.		LUBRICANT	LUBRICATION NO. AND MILEAGE AT WHICH DUE											
			1	2	3	4	1	2	3	4	1	2	3	4
			1000	2000	3000	4000	1000	2000	3000	4000	1000	2000	3000	4000
LUBRICATION NO. 4	LUBRICATION NO. 2	LUBRICATION NOS. 1 AND 3												
		CHECK RADIATOR LEVEL	WATER OR ANTI-FREEZE	O	O	O		O	O	O		O	O	O	
		ADD ENGINE OIL AS NECESSARY	ENGINE OIL	O		O		O		O		O		O	
		GENERATOR AND DISTRIBUTOR OIL CUPS	ENGINE OIL	O	O	O	O	O	O	O	O	O	O	O	O
		FAN—ADD ENGINE OIL	ENGINE OIL	O	O	O	O	O	O	O	O	O	O	O	O
		BRAKE PINS AND CONNECTIONS	ENGINE OIL	O	O	O	O	O	O	O	O	O	O	O	O
		DOOR HARDWARE, HINGE PIN, STRIKERS, DOVETAIL, CHECKS	ENGINE OIL	O	O	O	O	O	O	O	O	O	O	O	O
		GREASE GUN CONNECTIONS	CHASSIS LUBRICANT	O	O	O	O	O	O	O	O	O	O	O	O
		WATER PUMP GREASE CUP	WHEEL BEARING GREASE	O	O	O	O	O	O	O	O	O	O	O	O
		*ADD WATER TO STORAGE BATTERY	DISTILLED WATER	O	O	O	O	O	O	O	O	O	O	O	O
		CHECK TIRE INFLATION		O	O	O	O	O	O	O	O	O	O	O	O
		†TEST OIL FILTER		O	O	O	O	O	O	O	O	O	O	O	O
		DRAIN AND REPLACE ENGINE OIL	ENGINE OIL		O		O		O		O		O		O
		CLUTCH THRUST BEARING	FIBER GREASE		O		O		O		O		O		O
		TRANSMISSION—ADD LUBRICANT	CHASSIS LUBRICANT		O		O		O		O		O		O
		REAR AXLE—ADD LUBRICANT	CHASSIS LUBRICANT		O		O		O		O		O		O
		STEERING GEAR—ADD LUBRICANT	CHASSIS LUBRICANT		O		O		O		O		O		O
		FRONT BRAKE TRUNNIONS	CHASSIS LUBRICANT				O				O				O
		WHEEL BEARINGS	WHEEL BEARING GREASE				O				O				O
		SPEEDOMETER DRIVE SHAFT	WHEEL BEARING GREASE				O				O				O
		‡FLUSH COOLING SYSTEM					O				O				O
		§REFILL SHOCK ABSORBERS	SPECIAL OIL												O

THE FOLLOWING OPERATIONS CANNOT BE PLACED ON A MILEAGE BASIS AND ARE NOT INCLUDED IN THE ABOVE SCHEDULE:
REMOVE OIL PAN AND CLEAN PAN AND SCREEN—ONCE A YEAR OR WHENEVER OIL FILTER IS CHANGED
THIN REAR AXLE AND TRANSMISSION LUBRICANT AS REQUIRED FOR LOW TEMPERATURES.
DRAIN AND REPLACE REAR AXLE AND TRANSMISSION LUBRICANT—AT BEGINNING OF MILD WEATHER IN SPRING
REMOVE SPRING COVERS ONCE A SEASON AND REPACK WITH PETROLEUM JELLY.

*IN SUMMER, INSPECT BATTERY EVERY 500 MILES OR AT LEAST EVERY 2 WEEKS.
†AFTER FIRST 10,000 MILES
‡RECOMMENDED BUT NOT INCLUDED IN LUBRICATION NO. 4
§EVERY 12,000 MILES

RECORD ON OTHER SIDE

Figure 25. This is a fac-simile of the Cadillac Lubrication Schedule and Record Card. Provision is made on the back of the card for recording when and where the car is lubricated. A copy of this card can be obtained on request from Cadillac distributors and dealers.

(48)

CHAPTER I

Systematic Lubrication

Necessity for Lubrication

The quiet, dependable operation of a new car is primarily the result of the accurate finishing of surfaces separated from each other by a few thousandths of an inch. In the Cadillac, there are hundreds of such surfaces. If the clearances between these surfaces are to be maintained, so that the car will continue to operate quietly and dependably, wear must be prevented, and the only way this can be done is by correct lubrication.

Cadillac engineers have provided for the lubrication of all surfaces where friction is a factor. The most that a manufacturer can do, however, is to provide a place for the lubricant and means for it to reach the surface to be lubricated. The car cannot be equipped with an inexhaustible supply of lubricant. Upon the car owner devolves the responsibility of replenishing the supply at the proper time with lubricant of the prescribed specifications.

Because of the importance to the car owner of proper lubrication of his car, every effort has been made in this Manual to give explicit information. Lubricant is prescribed for each point requiring lubrication, directions are given for applying it and recommendations are made as to the frequency with which it should be applied.

Lubrication Schedule

Systematic lubrication, at regular mileage intervals, is the only kind that is effective. On page 48 is a complete lubrication schedule which, if faithfully followed, will insure correct lubrication for each wearing surface.

The unit of the Cadillac lubrication schedule is 4000 miles, which is divided into four 1000-mile intervals. Corresponding to these is a series of four consecutive groups of lubricating operations. When the car has traveled 1000 miles, the points enumerated under Lubrication No. 1 should receive attention. At 2000 miles, Lubrication No. 2 is due, and so on until at 4000 miles Lubrication No. 4 should be performed. At 5000 miles the schedule begins again with Lubrication No. 1.

In order that the driver may be continually reminded of the mileage at which the next lubrication is due, provision is made on the speedometer for a lubrication notice. This consists of a strip of black celluloid (Fig. 26) which is placed across the speedometer cover glass below the total mileage



Figure 26

Lubrication notice

dial and which has two white spaces, one for the lubrication number and one for the mileage at which it is due. Whenever the car is lubricated on the schedule, the figures then on the celluloid should be erased and the next lubrication number and the mileage at which it is due should be written or stamped in their places. If this notice is used, the driver need only glance occasionally at the speedometer and compare the mileage on the dial with the figures on the notice in order to plan for the necessary attention.

Cadillac distributors and dealers are prepared to sell lubrication based on this schedule. A car that is being lubricated on the schedule can be taken to any authorized Cadillac service station, and without further ordering than to specify "Schedule Lubrication," the car will receive the necessary attention.

Note: Do not wait for the mileage indicated on the notice before adding engine oil. The oil level should be checked every 100 to 150 miles and oil added, if the indicator ball is below "Full."

Lubricants

The selection of proper lubricants for the Cadillac car should be one of the first concerns of the owner in his attention to the lubrication of the car. The lubricants must not only be of high quality, but their viscosity and other characteristics must be suited to the Cadillac car.

The Cadillac owner is urged to consult the distributor or dealer from whom he purchased his car in regard to the names of lubricants that have been tested and approved for use in the Cadillac car.

Engine Oil

It is particularly important that only approved engine oils be used for high-speed continuous driving. Other oils cannot be depended upon to give satisfactory lubrication and economical mileage under such conditions. If, in an emergency, an unapproved oil must be used, special care must be taken to watch the oil level and add oil as soon as the level drops to "Fill."

During winter it may be necessary to thin the engine oil with kerosene in order to make the engine crank easily. See page 42 for instructions on lubrication in cold weather.

Chassis Lubricant

Lubricant conforming to the specifications for Chassis Lubricant is recommended for the transmission, rear axle, steering gear and all chassis points fitted with grease gun connections.

Lubricants conforming to these specifications may be used without thinning during all weather except winter weather below temperatures of 20° above zero. Below this temperature, thinning with kerosene is necessary in order to secure easier gear shifting, easier steering and proper lubrication of gears and bearings.

Wheel Bearing and Cup Grease

Greases approved under the specifications for Wheel Bearing and Cup Grease are suitable for lubricating the wheel bearings and water pump. This grease is not recommended for chassis lubrication, as Chassis Lubricant is much more effective.

Fiber Grease

Fiber Grease approved under the specifications for this type of lubricant is recommended for the clutch thrust bearing.

Spring Lubricant

Petroleum jelly should be used for packing springs in spring covers.

CHAPTER II

Engine Lubrication

Oil Circulating System

The supply of oil is carried in the pressed steel reservoir that covers the bottom of the crankcase. The oil is circulated by a gear pump attached to the front main bearing cap inside of the crankcase. The pump is driven by a vertical shaft which is in turn driven by a spiral gear on the camshaft.

The pump draws oil from the bottom of the reservoir and delivers it under pressure to the bearings. Oil reaches the front main bearing through a passage in the bearing cap. A supply pipe from the pump runs the length of the engine parallel to the crankshaft and leads branch off from it to feed the center and rear main bearings. From the rear of this pipe the oil is conducted to the hollow camshaft through which it flows forward and lubricates the camshaft bearings.

The oil is carried from the front end of the camshaft to the oil pressure regulator, which is attached to the crankcase just ahead of the right-hand

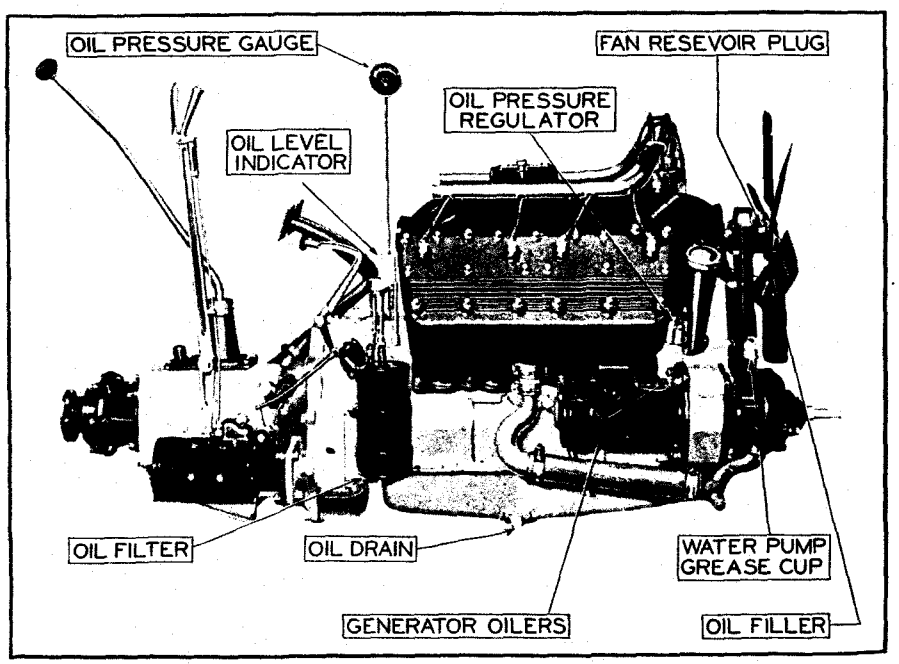

Figure 27. Showing the location of the oil filler, oil level indicator, oil pan drain plug and other lubrication features.

cylinder block. The regulator contains a by-pass with metering screw for adjustment of the oil pressure at idling speeds and a spring controlled valve that opens to prevent excessive pressure at high speeds. The oil that passes the regulator, either through the by-pass or around the valve, lubricates the front end chains.

The valve stems are automatically lubricated by oil sprayed from two small holes drilled in the wall of each cylinder at such a distance from the bottom of the cylinder that, when the piston is at the bottom of its stroke, these holes register with a groove in the piston between the second and third piston rings. As the piston descends on the power stroke, oil collects in this groove and as soon as the groove registers with the holes, the pressure of the gases above the piston forces oil out upon the valve stems. Surplus oil collecting in the valve compartments is returned to the crankcase through drain passages.

All oil returns to the oil pan through a fine mesh screen in the pan.

Oil Level

The normal capacity of the oil pan is two gallons, which fill it to the level of the screen above the pan. When the oil pan contains this amount, the oil level indicator on the right-hand side of the engine (Fig. 27) indicates "Full." As the oil level descends, the indicator indicates "Fill" and then "MT" (Empty). Oil should be added as soon as the indicator ball has dropped to "Fill." If the indicator has dropped to "MT" under no circumstances should the engine be run until oil has been added.

The mileage interval at which oil must be added depends upon individual circumstances. *It is recommended that the oil level indicator be checked every one hundred to one hundred and fifty miles, although it is improbable that oil will be required as frequently as this.*

Oil Pressure

The pressure of the oil in the supply pipe is indicated by the oil pressure gauge on the instrument board (Fig. 6).

It is absolutely necessary that there be oil pressure just as soon as the engine starts and as long as the engine is running. If the oil pressure gauge does not indicate pressure as soon as the engine starts, stop the engine at once and investigate the cause. First, check the level of oil in the oil pan. If the level is above "Fill," consult the nearest Cadillac service station.

The *amount* of pressure indicated by the gauge depends upon several things: the kind of oil, the temperature of the oil and the speed of the engine.

With fresh oil of the correct viscosity, the oil pressure at idling speed should be from 7 to 10 lbs. after the engine has become thoroughly warm.

The pressure indicated at speeds above idling speed may be assumed to be correct if the pressure at idling speed is correct.

Crankcase Ventilating System

In every internal combustion engine, seepage of vapors by the pistons takes place to some extent, permitting water vapor and other products resulting from combustion, as well as unburned gasoline, to enter the crankcase. Contamination of the lubricating oil from this source makes it necessary in most engines to replace the oil supply at frequent intervals.

Cadillac engines are equipped with a system to prevent the seepage vapors from entering the crankcase. To bring about this result, advantage is taken of the fact that the Cadillac crankshaft with its compensating weights acts naturally to draw air through an inlet in the left-hand side of the engine, building up within the crankcase a pressure slightly above atmospheric pressure. No outlet is provided in the crankcase itself, but in the wall of each cylinder is a port connecting the space below the piston with the valve compartment. This port is open except when the piston is at the extreme bottom of its stroke.

The effect of this arrangement is as follows: The seepage vapors that pass the two upper piston rings are forced through slots milled in the circumference of the lower piston ring through corresponding holes in the piston into the space inside the piston, where they are carried down as the piston descends. The vapors cannot enter the crankcase, however, because they are prevented from doing so by the pressure built up in the crankcase by the revolving crankshaft. Instead, the vapors are expelled through the port into the valve compartment. From the valve compartments the expelled vapors are conducted through flexible pipes underneath the car where they are discharged.

Oil Filter; 13*

Another source of contamination of the oil supply is dirt. In the Cadillac engine all solid matter in the oil is removed by means of a filter, which is attached to the right-hand side of the engine and which is connected to the oil circulating system.

The filter is connected to the oil line by a pipe that leads from a tee on the crankcase at the rear of the right-hand cylinder block. The oil pressure

*The numbers following the headings in this Chapter and Chapter III refer to Fig. 29.

gauge on the instrument board is also connected to this tee. Oil is thus forced to the filter whenever the engine is running and there is pressure in the oil line.

When the filter cartridge is new the capacity of the filter is such that at a car speed of 25 to 30 miles per hour the quantity of oil in the crankcase will pass through the filter approximately every five minutes. This rate of flow will gradually decrease until the filter ceases to function due to clogging, and when this occurs it will be necessary to replace the filter cartridge. The filter is provided with a safety valve which prevents excessive pressure on the filter tank.

To determine whether oil is passing through the filter, open the T-shaped valve on the filter fitting. If oil flows from the opening, the filter is operating. When performing this test the engine must be running and should be sufficiently warm to allow free oil flow. Make sure that the valve is tightly closed after the test is completed.

The filter on some cars is fitted with a square plug. Remove this plug to test the filter.

It is important that the filter cartridge be replaced just as soon as the filter ceases to function. Otherwise the whole purpose of the filter is defeated and wear of the engine parts will result from the dirty oil.

Under average conditions, replacement of the filter cartridge is recommended every 10,000 miles. In any event the flow of oil through the filter should be tested at the end of 10,000 miles and every 1000 miles thereafter until the filter cartridge is replaced. Filter cartridges for replacement can be obtained from Cadillac distributors and dealers or from United Motors Service stations.

Replacing Engine Oil; 11

Although the crankcase ventilating system and the oil filter described in the preceding sections greatly prolong the useful life of the oil, it is recommended that the oil be drained and replaced with fresh oil every 2000 miles.

To drain the oil, simply remove the drain plug (Fig. 27). Be sure to reinstall the drain plug before adding the fresh oil. Two gallons of fresh oil should be added, or enough to bring the oil level indicator ball to "Full."

At the end of the first 1000 miles, it is recommended that the car be taken to a Cadillac service station to have the oil pan and screen removed and cleaned with gasoline or kerosene. This should be repeated once a year or whenever the filter unit is replaced.

Generator Oil Cups; 12

Two oil cups on the generator conduct lubricant to the forward and rear bearings on the armature shaft. A few drops of engine oil should be applied to each cup every 1000 miles.

Timer-Distributor Oil Cup; 5

The oil cup at "5" is for lubricating the ball bearing at the upper end of the timer-distributor shaft. A few drops of engine oil should be applied every 1000 miles.

Fan; 7

The fan is lubricated by oil contained in a reservoir in the fan hub. The screw plug in the outside of the reservoir should be removed every 1000 miles and engine oil should be added to bring the oil to the proper level. In adding oil, it is necessary to add somewhat more than enough and then drain off the surplus by turning the fan so that the hole points down. A short stand-pipe inside the reservoir insures that the proper amount of oil is retained. The filling hole should be pointed down for at least half a minute to allow air to enter and permit the surplus oil to flow out. A cloth or piece of waste may be held under the hole to catch the oil. *Do not put grease or heavy oil in the fan.*

Water Pump; 8

A grease cup is provided for lubricating the water pump. This cup should be turned down and refilled with cup grease every 1000 miles.

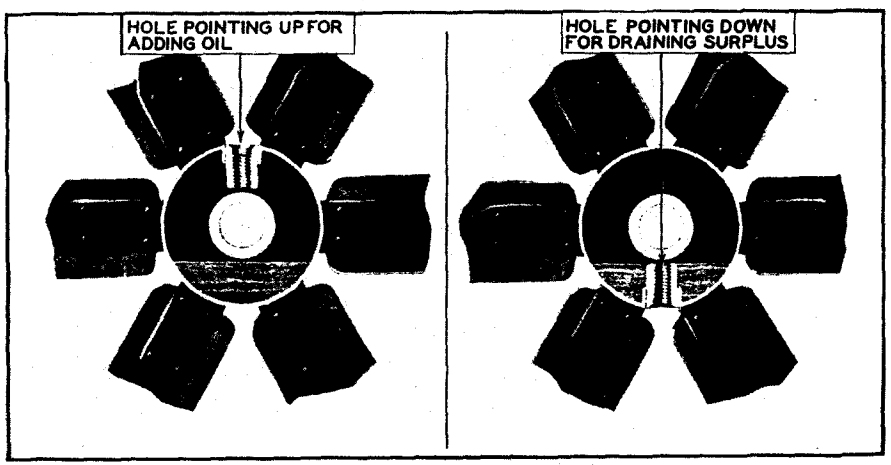

Figure 28. Oil for lubricating the fan is carried in the fan hub. The supply must be replenished every 1000 miles. Grease or heavy oil must never be used in the fan.

CHAPTER III

General Lubrication

Grease Gun Connections; G

SPRING bolts, steering connections, brake rocker shafts and other points are provided with connections to fit the grease gun supplied with the tool equipment. These points are indicated by "G" in Fig. 29. Chassis lubricant should be applied to these points with the grease gun every 1000 miles.

Clutch Thrust Bearing; 14

The lubricating point on the clutch thrust bearing is fitted with a grease cup on an extension that passes through the right-hand side of the transmission case. It can be reached after lifting the right side of the hood.

The grease cup should be filled with fiber grease and turned down two or three times every 2000 miles.

Transmission; 15

The transmission case should contain sufficient lubricant to bring the level up to the filling hole at the right-hand side. The level should be inspected every 2000 miles and chassis lubricant added if necessary.

If, in cold weather, the transmission gears are difficult to shift, the lubricant should be thinned by the addition of kerosene. On the return of warm weather in the spring, the drain plug should be removed from the bottom of the transmission case and the lubricant should be drained and replaced with fresh lubricant. Two and one-half quarts of lubricant are required to fill the transmission case to the proper level.

Rear Axle; 18

The rear axle housing should contain enough lubricant to bring the level up to the filling hole in the rear cover plate. The level should be inspected every 2000 miles and chassis lubricant added if necessary.

In weather cold enough to warrant thinning the transmission lubricant, the lubricant in the rear axle should also be thinned. On the return of warm weather in the spring the drain plug should be removed from the bottom of the axle housing and the lubricant should be drained and replaced with fresh lubricant. Two and one-half quarts of lubricant are necessary to fill the rear axle housing to the proper level.

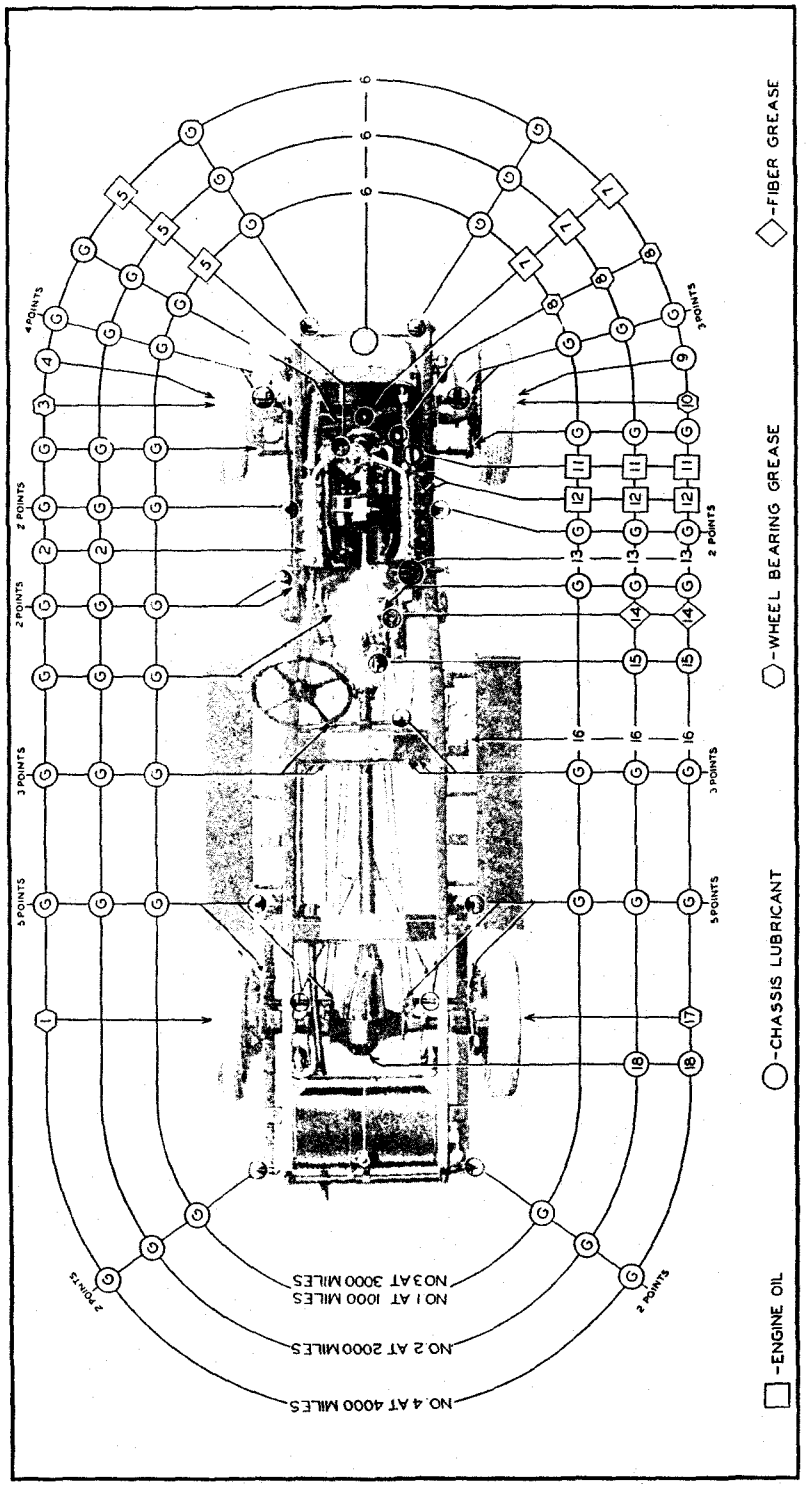

Figure 29. Chassis lubrication diagram. Each "G" indicates a grease connection. Each number indicates a lubricating point for which instructions are given in Chapters II and III.

Wheels; 1, 3, 10, 17

The front and rear wheel bearings are packed in grease when the car is assembled. Every 4000 miles all the wheels should be removed and the bearings should be thoroughly cleaned in gasoline or kerosene. They should then be repacked and the bearings adjusted in accordance with the directions on page 105.

No. 2½ cup grease is recommended for the wheel bearings. Do not use heavy grease as it will roll away from the path of the rollers and will not return.

Front Brake Trunnions; 4, 9

Every 4000 miles, at the same time that the wheels are removed for lubrication of the wheel bearings, the brake operating trunnions inside the front wheel brake drums should be lubricated by applying the grease gun to the connection at "A" (Fig. 30). Chassis lubricant should be used. It should be injected only until it begins to appear around the trunnion bearings. Do not inject too much lubricant. Before replacing the wheels, wipe off any lubricant appearing around the trunnion bearings. Do not inject any lubricant at "A" except when the wheel is off and the application of too much lubricant can be definitely avoided.

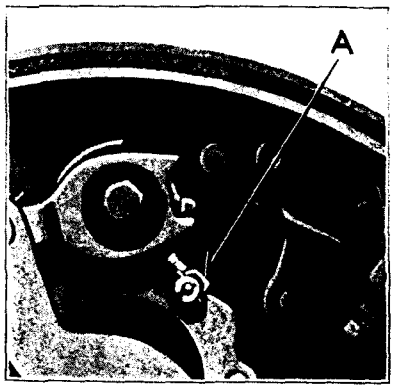

Figure 30. The front brake trunnions are lubricated through the connection shown above, which is accessible after removing the front wheel.

Steering Gear; 2

The grease gun connection for adding lubricant to the steering gear is on top of the housing just at the base of the steering column. Chassis lubricant should be added every 2000 miles. If, in cold weather, the car steers hard, the lubricant should be thinned by the addition of kerosene.

Speedometer Flexible Drive Shaft

The flexible shaft by which the speedometer is driven is housed in a flexible casing. To lubricate the speedometer drive shaft, the shaft should be removed from its casing and lubricant applied to it for its entire length. Cup grease is recommended for this lubrication which should be performed every 4000 miles.

Do not under any circumstances attempt to lubricate the speedometer itself. Any parts in the speedometer requiring lubrication are amply supplied when it is assembled.

Springs

The springs are encased in spring covers which retain the lubricant and exclude water. The only attention they require is repacking once a season with petroleum jelly.

Flushing Cooling System; 6

The cooling system should be drained and flushed every 4000 miles. If possible this should be done at a Cadillac service station or where facilities are available for reversing the flow of water through the radiator. If this cannot be done, the method described on page 79 should be followed.

Door Hardware

Whenever the chassis is being lubricated, the door locks and other door hardware should also be lubricated as follows:

Place a few drops of oil on each door lock plunger or striker, turning the handle back and forth so that the oil will work into the lock. Also place a drop of oil on each of the striker plates against which the strikers engage when the doors are closed. The hinge pins should also be oiled sparingly so as not to get oil on the finish.

Each door has a wedge-shaped tongue that dovetails into a receptacle on the body when the door is closed. These tongues should receive a small amount of grease or oil.

Each closed car door is also fitted with a check at the top which limits the outward movement of the door. A small amount of grease should be applied to the pin that slides in the slot at the top of the door.

Storage Battery; 16

Distilled water should be added to the cells of the storage battery at least every 1000 miles. (See page 84).

Shock Absorbers

The Delco-Remy-Lovejoy shock absorbers with which Cadillac cars are equipped should have oil added every 12,000 miles. If the oil in the shock absorbers is not up to the proper level, the normal spring action will not be obtained. The shock absorbers require a special oil which can be obtained from Cadillac distributors or dealers or United Motors Service Branches and authorized distributors.

CHAPTER IV

Care of Body

Care of Finish when New

On cars finished with varnish, more careful and more frequent attention is necessary when the car is new than after the varnish has hardened. Particular care should be taken to keep mud from the body and hood for the first few weeks. Even after the varnish has hardened, mud must not be permitted to remain on the finish over night or long enough to dry.

The same degree of caution, although commendable, is not as necessary on cars finished with Duco, because Duco hardens much more quickly than paint or varnish.

Washing Varnished Cars

Use clean water and plenty of it. Do not use water containing alkali. In parts of the country where the regular water supply contains alkali, use rain water.

Do not use hot water as it destroys the luster. The temperature of the water should be between 40 and 60 degrees Fahrenheit. Do not wash the hood while it is hot, because the effect on the finish is the same as washing it with hot water. Unless the hood is allowed to cool before washing, the luster will soon disappear.

Wash the chassis first, going over the under sides of the fenders, the wheels, and the running gear with water flowing gently from the hose. This will flush off most of the mud and dirt.

After washing the chassis, begin at the front of the car and flow water from the hose upon the body, hood and upper surfaces of the fenders. This will soften the accumulation of road dirt, removing most of it. Then go over the car again and remove all dirt by rubbing with a soft wool sponge, at the same time applying an abundance of water from the hose. The sponge, which should be kept exclusively for the body, hood and upper surfaces of the fenders, should be rinsed frequently in clean water to remove any grit.

After the washing is completed, squeeze the sponge as dry as possible and pick up all water from crevices. Then thoroughly wet a clean, soft chamois, wring it as dry as possible, and dry the finish. Be sure and use a chamois that has not been used on the chassis. Rinse the chamois and wring it out frequently. Do not rub the finish or apply more pressure than is necessary to dry off the surplus water. The remaining water will evaporate quickly, leaving the finish in good condition.

Do not use soap, gasoline, kerosene, or anything of similar nature on the finish. Such materials attack the finish.

Washing Duco

Although it is not necessary in washing cars finished in Duco to use the same degree of care as in washing varnished cars, nevertheless the same general directions should be followed.

Care Of The Top

Ordinary dust can be removed from the top with a soft dry cloth. Grease spots, stains and dirt film can be removed by washing with a mild, neutral soap. Rinse thoroughly with clear water to remove all traces of the soap, then dry with a chamois or cloth. Gasoline, naphtha, kerosene and fabric cleaners should not be used for cleaning the top, as such preparations are likely to dull the luster and damage the fabric, causing leaks.

If the top becomes dull or check-marked, clean it thoroughly and apply a coat of Du Pont No. 7 Auto Top Finish. This should be applied with a flat varnish brush and allowed to dry over night. It will restore the luster, protect the top fabric, and keep it thoroughly waterproof. A coat of this finish every six months will keep the top in perfect condition.

The inside of the top should be cleaned occasionally with a whisk broom, stiff brush or vacuum cleaner.

Cleaning Windows

Do not clean the window glass with preparations that may contain harmful ingredients. Use only cleaning compounds that are known to have no destructive effects on highly polished glass.

Cleaning Upholstery

To keep the upholstery in closed cars in the best condition, it should be cleaned thoroughly at least once a month with a whisk broom and vacuum cleaner. Dirt and grit accumulating in the fabric wear it out faster than use.

Spots on the upholstery may be cleaned with any good dry cleaner. When the cleaner has thoroughly evaporated, apply a hot flatiron wrapped in a wet cloth. Steaming the fabric and rubbing lightly against the nap will raise the nap to its normal position.

CHAPTER V

Care of Tires

Each tire maker publishes a booklet giving instructions on care and repair of tires. Every motorist should provide himself with one of these booklets and thoroughly study the contents. The suggestions given here apply to pneumatic tires in general.

Three-fourths of the so-called "tire trouble" is the result of misuse. The object of this chapter is to show just how tires are injured through unintentional misuse and how to obtain good service from your tires by avoiding those common abuses.

Inflation Pressure

The chief factor in the life of a pneumatic tire is the air contained within it. It is the air cushion that supports the load, the tire itself is merely a container for the air. The amount of air should always be sufficient to carry all the weight of the loaded car.

The 32 x 6.75 low pressure tires used on Cadillac cars should be inflated to a pressure of 40 lbs. per square inch. This pressure should be checked at least once a week with a reliable tire gauge and should never be permitted to drop more than a few pounds below this standard.

Results of Under-Inflation

Under-inflation is the underlying cause of most tire failure. Unless tires are inflated to the recommended pressure they are liable to be damaged in many different ways.

When there is not enough air in the tire to carry the load properly, the weight is transmitted to the casing of the tire. This causes an extreme bending or flexing of the side walls, which usually results in a crack or break in the casing. A break in the casing will pinch the tube and cause either a slow leak or a blow-out. This flexing action due to under-inflation is also the principal cause of the separation of the tread rubber from the carcass, or of separation between layers of the fabric or cord. Separation causes a chafing action which finally results in a blowout.

Besides causing this flexing action of the side walls, under-inflation also causes the tires to revolve with a wiping or scraping motion on the road. This necessarily results in excessive wear of the tread. This wear is usually even, although very rapid. but at times it results in worn spots at varying

intervals around the casing. Actual tests have shown that running a balloon tire at too low a pressure will reduce the life of the tire about one-half.

In addition to what has been mentioned, under-inflation makes a tire more susceptible to any other type of injury. For example, a fabric break can occur more easily in an under-inflated tire. A sharp jolt on a rough road could easily drive the tire against the rim and injure the casing while in a properly inflated tire the air pressure would absorb the same shock without damage.

Results of Improperly Aligned Wheels

Rapid and uneven tread wear will result from running a car with the front wheels out of alignment. This may affect either one or both of the front tires. Incorrect adjustment of the front axle parallel rod or a bent steering arm is responsible for this condition. If this is not remedied it will result in the treads of the front tires wearing away very rapidly.

Value of Careful Driving

A little care in driving the car will pay big returns in longer life of the tires.

Avoid bad holes in pavement and stones or other obstructions in the road. Do not turn corners or run over sharp obstructions, like car tracks, at a high rate of speed. In turning in a narrow street, avoid striking the curb. Bumping into stones, curbs or other obstructions will result in injury to the carcass of the tire, even though no injury is apparent on the outside.

Avoid scraping the tires against the curb or running in ruts or in street car tracks. This treatment scrapes the rubber from the side walls, leaving the layers of cord exposed to dirt and moisture, which soon start to rot the cords.

When stopping the car, apply the brakes so as to come to a stop gradually. Do not apply the brakes so suddenly that the wheel slides on the pavement. Sliding the wheels will cause the tread to wear away in spots. A tire will give way very rapidly under this severe treatment.

Repairs to Tires

Tires should be inspected regularly and any small pieces of glass or metal that may adhere to them should be removed. If any cuts are found which extend to the cords they should be treated at once. Tire companies furnish a plastic compound for filling cuts which prevents dirt and moisture getting in. It is unnecessary to remove a tire to treat small cuts.

Large bruises, cuts or other injuries can usually be repaired at a reasonable cost. Tires in need of these repairs should be taken to a reliable shop for vulcanizing. The use of temporary patches or boots will soon cause the complete failure of the tire with the loss of considerable mileage.

In case of puncture, the car should be stopped at once and the tube repaired or replaced, or the tire replaced by the extra one. The tire should also be examined carefully and the cause of the puncture ascertained and the nail, glass or whatever it may be, should be extracted. Before replacing the tire on the rim, examine the inside of the casing, to see that the cause of the puncture is not still protruding.

If a tire goes flat without any indication of injury to the tire, see that the valve is not leaking. A little moisture on the tip will show bubbles if the air is escaping.

Additional Suggestions

The tires are constructed for the purpose of carrying up to certain maximum loads and no more. It should be realized that overloading a car beyond the intended carrying capacity is sure to materially shorten the life of the tires.

The garage floor should be kept free from oil or gasoline. The tires on a car left standing on a grease-covered floor deteriorate quickly, the natural enemies of rubber being oil and gasoline. These destroy the nature of the rubber, rendering it soft, so that it cuts and wears away quickly.

Tires are sometimes badly damaged through the use of tire chains which are incorrectly adjusted or which are fastened to the spokes of the wheel holding the chains tightly in place. The least injury results when chains are applied loosely, leaving play enough to permit them to work around. The wear on the tire is thus distributed evenly. Probably the greatest amount of injury comes from using chains unnecessarily on paved streets.

If the car is not used during the winter, it is better to remove the tires from the rims, keeping casings and tubes in a fairly warm atmosphere away from the light. It will be better to slightly inflate the tubes as that keeps them very nearly in the position in which they will be used later on. If the tires are not removed and the car is stored in a light place, it will be well to cover the tires to protect them from the strong light, which has a deteriorating effect on rubber.

CHAPTER VI

Storing Car

If the car is not to be used for a period of several months, it should be protected from deterioration during the period when it is not in use by carefully preparing it for storage.

Engine

To prepare the engine for storage, proceed as follows: Run the engine until opening of the radiator shutters indicates that the engine is warm. This may be done by driving on the road or by running the engine idle. In the latter case care should be taken that there is sufficient ventilation to avoid injury from carbon monoxide poisoning. (See page 20.)

After the engine is warm, place the car where it is to be stored. Remove the black enameled cover over the intake header. Then shut off the flow of gasoline to the carburetor by turning the valve above the filter. As soon as the engine starts to slow down raise the polished aluminum cap on top of the carburetor and inject three or four tablespoonfuls of clean fresh engine oil into the carburetor. Injection of the oil will stop the engine.

Remove the spark plugs. Inject two or three tablespoonfuls of engine oil into each spark plug hole and before replacing the plugs crank the engine three of four revolutions with the ignition switched off. This will tend to distribute the oil over the cylinder walls. The engine should not be started again after injecting the oil. If it is started, it will be necessary to repeat the treatment.

Storage Battery

If the car is to be stored during the winter, the storage battery should have special treatment in order to protect it against freezing.

Shortly before the car is used for the last time, distilled water should be added to bring the level of the solution up to the bottom of the filling tubes. (See page 84.) After the water added has had an opportunity to mix thoroughly with the acid solution by running the car or engine, the specific gravity should be taken with a hydrometer. If the specific gravity of the solution is above 1.270 there will be no danger of the acid solution freezing. If, however, the specific gravity is below 1.270, the battery should be removed and charged. *Unless the battery is fully charged or nearly so it is probable that the acid solution in the battery will freeze and cause extensive damage.*

The battery ground connection should in all cases be disconnected during storage as a slight leak in the wiring will discharge the battery and lower the specific gravity to the point where the solution may freeze.

If possible, the storage battery should be removed and charged from an outside source every two months during the storage period.

Tires

During storage of the car, it is best to remove the tires *from the rims* and to keep the casings and tubes in a fairly warm atmosphere away from the light. The tubes should be inflated slightly after the tires have been removed.

If it is not convenient to remove the tires from the car and the car is stored in a light place, cover the tires to protect them from strong light, which has a deteriorating effect on rubber.

The weight of the car should not be allowed to rest on the tires during the storage period. If tires are not removed, the car should be blocked up so that no weight is borne by the tires. The tires should also be partly deflated.

Body and Top

A cover should be placed over the entire car to protect it from dust. In storing an open car, the top should be up.

Taking Car Out of Storage

In putting into use again a car that has been stored, it is advisable, unless the storage battery has been removed and charged at periodic intervals, to remove the battery from the car and give it a fifty-hour charge at a four-ampere rate. If the battery has received periodic charges, or if the specific gravity is above 1.200, simply add distilled water to the proper level and connect the leads. If there is a greenish deposit on the terminals of the battery, remove this with a solution of bicarbonate of soda (common cooking soda) and water. Do not allow any of this solution to get into the battery.

Before starting the engine, drain the oil from the oil pan and remove and clean the oil pan and screen. After reinstalling the oil pan, add eight quarts of fresh engine oil. Fill the cooling system, being sure to use anti-freezing solution in freezing weather. Remove the spark plugs and inject two or three tablespoonfuls of engine oil into each cylinder. Reinstall the spark plugs and, with the ignition switched off, crank the engine a few seconds with the starter to distribute the oil over the cylinder walls.

Start the engine in the usual manner. As soon as the engine starts, immediately let the carburetor enriching button go as far forward as possible without causing the engine to stop or slow down materially and then open the throttle until the ammeter reads approximately 10 with all lights switched off. While the engine is running lift the aluminum cap on top of the carburetor and inject from two to three tablespoonfuls of engine oil into the carburetor. It is a good plan to run the car outdoors as soon as this has been done. Release the carburetor enriching button entirely as soon as the engine is warm enough to permit it.

PART III

GENERAL INFORMATION

It is not the object of this section of the Manual to give complete directions for the repair and adjustment of Cadillac cars. Most Cadillac owners prefer to depend for the majority of such work on Cadillac Service Stations, where proper equipment and skilled workmen are available.

The details given here include general information regarding the construction of the car and some of the simpler adjustments and operations which do not require special equipment, and which, in emergency, can be performed satisfactorily by the average automobile mechanic.

CHAPTER I
Engine

Important Features of Construction

The Cadillac engine is of the water-cooled, four-cycle type with two L-head cylinder blocks of four cylinders each, placed opposide each other at an angle of 90° between the blocks. The cylinders of one block are slightly staggered with relation to those of the other block, the lower ends of opposite connecting rods working side-by-side on the same throw of the crankshaft.

The crankshaft has four throws or cranks, and three main bearings. The camshaft has four bearings and is driven by the crankshaft through a silent chain. The camshaft has sixteen cams, each operating one valve through a camslide which carries a roller.

The engine base is the aluminum crankcase that supports the cylinder blocks and carries the crankshaft and camshaft bearings. The crankcase is supported at the rear end by two arms which are cast integrally with the crankcase, and which are carried on rubber cushions held in brackets on the frame. The front end of the engine is supported on a cross-member of the frame below the radiator.

Firing Order

In valve and ignition adjustments, the cylinders are referred to by numbers, the numbers indicating the order in which the cylinders fire. These numbers, the arrangement of which is shown in Fig. 31, are stamped on the cylinder heads near the spark plugs.

Main and Connecting Rod Bearings

The large diameter of the main and connecting rod bearings and the freedom of the crankshaft from vibration renders it ordinarily unnecessary to adjust these bearings for many thousands of miles. When bearing work is necessary, it should be performed only by one who is familiar with the work and who has the proper equipment.

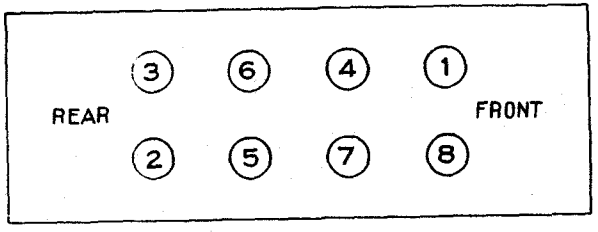

Figure 31. The cylinders fire in the order of the numbers shown here.

The connecting rod bearings are cast in the connecting rods by a special process. When new connecting rod bearings are necessary, the entire rod should be replaced. Rods with new bearings can be procured from Cadillac distributors and dealers on an exchange basis.

Grinding Valves

Valve grinding will seldom be necessary if the valve stem clearance has been correctly adjusted. Valves should not be ground unless they require it. Misfiring is often due to incorrectly adjusted timer contact points or other causes besides leaking valves. A competent tester can determine quickly whether the misfiring is due to ignition or valves.

No attempt can be made here to describe in detail the procedure for grinding valves. The following are in the nature of suggestions and cautions to one who is already familiar with the general method of valve grinding.

If the seats on the valves are grooved or pitted, they should be refaced in a suitable grinder. If the seats in the cylinder blocks are very rough, they should be cleaned up with a reseating tool.

The angle of the inlet valve seats is 30°, and the angle of the exhaust valve seats is 45°. When refacing valves, be sure to set the machine to these angles, and when reaming valve seats use reamers with the proper angles.

CHAPTER II
Gasoline System

General Description

The general arrangement of the gasoline system is illustrated in Fig. 32. The supply of fuel is carried in a 21-gallon tank at the rear, from which it is fed by vacuum to a tank on the dash. The fuel flows from this tank to the carburetor by gravity.

The vacuum for feeding the fuel from the supply tank to the tank on the dash is supplied from two sources: (1) The intake header and (2) a special vacuum pump driven by an eccentric on the rear end of the camshaft. The vacuum of the intake header alone is insufficient at wide open throttle to insure adequate flow of fuel and the pump is provided to supplement the intake header and furnish an adequate vacuum at all times.

The vacuum tank (Fig. 33) consists of an outer chamber and an inner chamber, the bottom of which communicates with the outer chamber through a flapper valve. The feed pipe from the supply tank enters the inner chamber of the vacuum tank which contains a float. This float operates

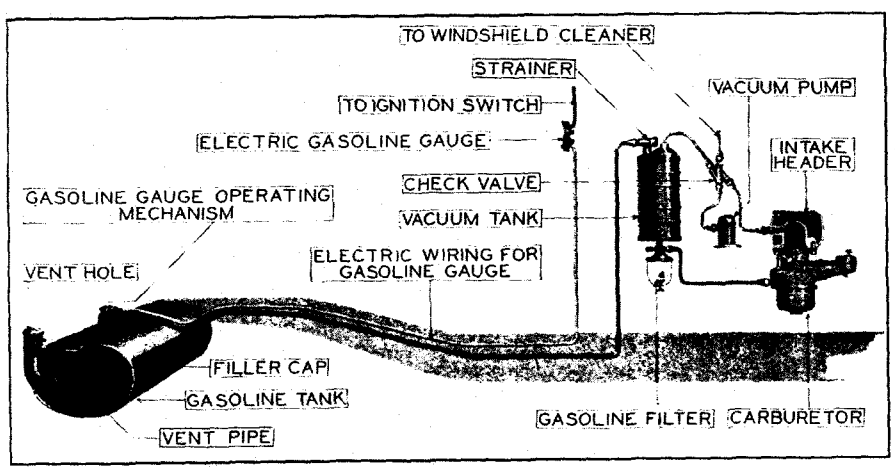

Figure 32. The gasoline is fed by vacuum from the supply tank to the vacuum tank on the dash and from there to the carburetor by gravity.

two valves, one in the passage to which the intake header and suction pump are connected, and the other in a passage communicating with a vent tube open to the atmosphere. When the float is down, the vent valve is closed and the vacuum valve is open. When the float is up, the vacuum valve closes and the vent valve opens.

Operation of Vacuum Tank

The action of the system in operation is as follows:

Starting with the inner chamber empty and the float at the bottom, the vacuum valve is open and the vent valve is closed. The suction of the intake header and the vacuum pump immediately causes gasoline to be drawn through the feed pipe from the supply tank to the inner chamber. The flapper valve is held closed by the vacuum within the inner chamber and the level of gasoline in the inner chamber rises until the float reaches the top of its travel, closing the vacuum valve and opening the vent valve. This breaks the vacuum in the inner chamber and the flapper valve at the bottom opens under the weight of gasoline, emptying the contents of the inner chamber into the outer chamber. The float drops simultaneously, and, as it reaches the bottom, again operates the valves, this time opening the vacuum valve and closing the vent valve. The cycle thereupon starts again.

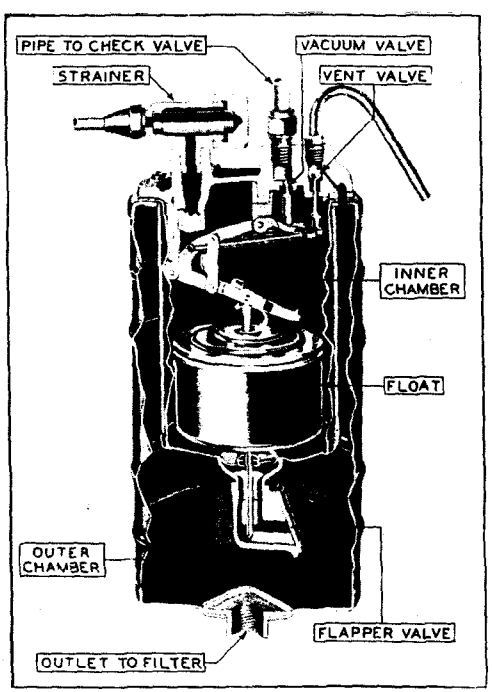

Figure 33. Sectional view of vacuum tank.

This alternate filling and emptying of the inner tank is repeated rapidly until the level of gasoline is the same in the inner and outer chambers, and thereafter only as the carburetor demands fuel.

Ordinarily, there is enough fuel in the carburetor and in the vacuum tank to start the engine. If not, the automatic feeding action can usually be started by closing the throttle and operating the starter for about ten seconds. Wait a few seconds to allow the fuel to flow to the carburetor, and then start the engine as usual.

The flow of fuel from the supply tank depends upon the difference in pressure between the vacuum tank and the supply tank. It is, therefore, essential that the supply tank be open to atmospheric pressure. For this reason, the vent hole in the gasoline filler cap *must* be kept open.

Gasoline Filter and Strainer

A gasoline filter (Fig. 34) is provided in the gasoline line between the vacuum tank and the carburetor. This filter has a glass bowl through which the accumulation of water and sediment can be easily seen. The bowl should be removed and the gauze screen should be cleaned as soon as any accumulation appears in the bowl. This can be done as follows:

First shut off the gasoline by turning clockwise the small T-handle valve at the side of the filter. Then unscrew the thumb screw under the bowl, after which the yoke supporting the bowl can be swung to one side and the bowl can be removed. If the screen does not come off with the bowl, it can be removed by pulling it straight down.

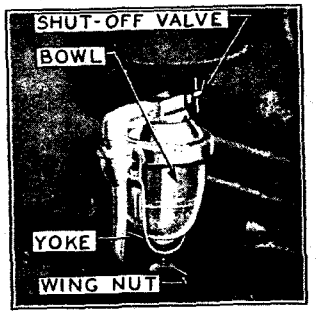

Figure 34. To remove the filter bowl for cleaning the screen, close the shut-off valve, loosen the wing nut at the bottom and disengage the supporting yoke.

In putting back the bowl, make sure that it seats properly against the cork gasket in the top of the filter before tightening the thumb screw. Do not forget to turn the gasoline on by turning the valve counter-clockwise as far as it will go.

There is also a strainer in the vacuum tank at the point where the gasoline enters the tank. The strainer should be removed and cleaned occasionally. The strainer is accessible after unscrewing the cap on the right-hand end of the strainer. (Fig. 33.)

Adjustment of Carburetor

The carburetor should not be tampered with unless it needs adjustment. Good carburetor action cannot be expected before the engine is thoroughly warmed up. This is particularly true during cold weather. Imperfect carburetor action while the engine is cold does not indicate that the carburetor requires adjustment, and carburetor adjustment should not be made under such conditions.

If possible, the carburetor should be adjusted by an authorized Cadillac service station. The following instructions, however, are given for reference when a Cadillac service station is not convenient.

When adjusting the carburetor, select a quiet place, for correct adjustment depends largely upon being able to detect slight changes in engine speed.

In order to reach the carburetor adjustments the cover over the intake header must be removed. This is held by two thumb nuts on the top of the cover.

Before making any other adjustments, make sure that the tongue on the auxiliary air valve shaft stands in the center of the slot in the enriching control lever, when the button on the instrument board is forward as far as it goes (Fig. 35). If the tongue does not stand in the center of the slot, readjustment should be made by altering the length of the control rod.



Figure 35. Before adjusting the carburetor, make sure that the enriching control rod is properly adjusted.

The next adjustment to be checked is that of the throttle stop screw for controlling the idling speed of the engine (Fig. 36). Under normal conditions, this speed should be about 300 R. P. M. To adjust the idling speed, loosen the set screw in the collar on the control rod running from the steering gear to the lever on the accelerator pedal shaft on the front face of the dash. Then adjust the stop screw on the carburetor until the correct idling speed is obtained. When the throttle stop screw at the carburetor has been correctly adjusted, then move the throttle control lever to the closed position and set the collar on the control rod $\frac{1}{32}$ inch from the trunnion on the lever.

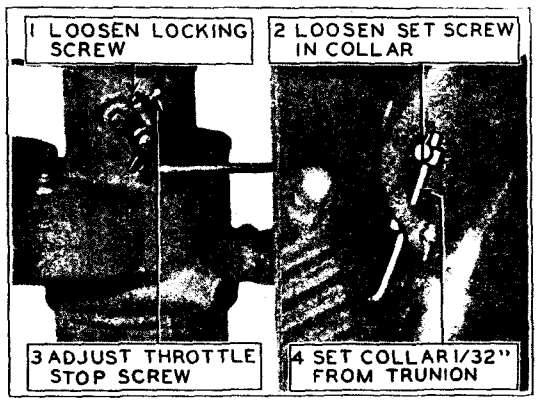

Figure 36. The idling speed, which should be about 300 r. p. m., is controlled by the throttle stop screw.

If the mixture is so far from correct that the engine will not idle as slowly as 300 R. P. M., close the throttle as far as possible without stalling the engine, and proceed with the adjustment of the auxiliary air valve.

The auxiliary air valve spring, which constitutes the main adjustment of the carburetor, is adjusted by the knurled adjusting screw shown in Fig. 37. Before turning this screw to make any adjustment, determine whether the mixture is lean or rich. Start the engine and run it until the engine is thoroughly warm. Place the spark lever in the fully retarded position and move the throttle lever to the closed position.

Then press down gently on the ball-shaped counterweight of the auxiliary air valve, and note whether the immediate result is an increase or a decrease in engine speed. Release the counterweight and allow the engine to run a few seconds to regain its normal speed. Then press gently up on the counterweight and note the effect on the engine speed.

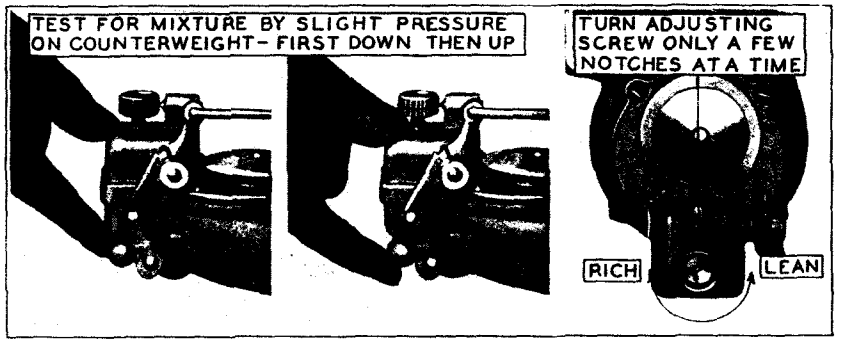

Figure 37. The principal carburetor adjustment is the auxiliary air valve. This should be done with the spark retarded and the hand throttle in the idling position.

If the mixture is correct, the immediate result of gentle pressure, either up or down, on the counterweight of the auxiliary air valve will be a slight decrease in engine speed. If the immediate result of gentle upward pressure is a slight decrease in engine speed, while the result of downward pressure is an increase in engine speed, a rich mixture is indicated. If the immediate result of upward pressure is an increase in engine speed, a lean mixture is indicated.

If this test indicates an incorrect mixture, adjust the auxiliary air valve screw by turning it clockwise to correct a lean mixture and counter-clockwise to correct a rich mixture. Continue to change the adjustment of this screw and to test as above until a correct mixture is indicated. Do not turn the screw more than a few notches at a time, and not more than two notches at a time when nearing the correct adjustment.

If, after adjusting the auxiliary air valve, the engine idles too fast, readjust the throttle stop screw.

Gasoline Tank Gauge

As explained on page 10, the gasoline gauge is an electrical device and is connected in the ignition circuit. It is therefore in operation only when the ignition is switched on. The purpose of this arrangement is so that the gauge will not draw current while the car is not in use.

When the ignition is switched off, the gauge hand may come to rest anywhere on the gauge. It does not return to zero, nor does it ordinarily stay in the position it had before the ignition was switched off. At such times, therefore, the reading of the gauge is not a true reading. A true reading is given only when the ignition is switched on.

It is of vital importance that the electrical connections in the gauge circuit be correctly made. If the connections are reversed, the gauge will not only fail to register correctly, but is likely to be injured.

CHAPTER III

Cooling System

Water Circulation

THE Cadillac engine is cooled with water circulated through the jackets of the cylinder blocks by a centrifugal pump. This pump is mounted on the right-hand side of the engine near the front, and is driven by a chain from the crankshaft. The pump draws cold water from the bottom of the radiator and delivers it to a connection on the right-hand side of the engine, where the stream divides, half going to the right-hand cylinder block and half through a passage in the crankcase to the left-hand cylinder block. From the front end of each cylinder head, an outlet pipe with hose connections carries the heated water to the top of the radiator.

Adjustment of Fan Belt

The tension of the fan belt must be maintained correctly. If the belt is too loose the fan will slip, and if it is too tight, an unnecessary load will be imposed on the bearings.

To test the tension of the fan belt, slip the fan by pulling on one of the blades. If it is difficult or impossible to slip the fan in this way, the belt is too tight. If the fan slips easily, the belt is too loose.

To change the tension of the belt, loosen the nut on the rear end of the fan shaft. Then raise the fan with a small lever to increase the tension or lower it to decrease the tension. Be sure to tighten the nut after the correct tension has been secured.

Radiator and Shutters

The radiator consists of an upper tank and a lower tank connected by water passages, around the outside of which air is circulated by the fan. The water passages are so constructed that they expose a large amount of surface to the air, which cools the water as it passes from the upper to the lower tank. Until the water in the cylinder blocks and radiator is warm, the cooling effect of the radiator is not only unnecessary but undesirable. The radiator is accordingly provided with shutters that prevent air from circulating around the water passages until the engine becomes warm. The shutters are pivoted vertically and are controlled automatically by a powerful thermostat contained in the upper tank of the radiator.

When the engine is cold, the shutters are held tightly closed and circulation of air is prevented. The water from the cylinders consequently undergoes

little change in temperature as it flows through the radiator, and the engine quickly becomes warm. As soon as the water entering the upper tank of the radiator reaches the temperature at which the engine operates best, the shutters are forced open by the thermostat and air begins to circulate. The resulting cooling effect checks the rising temperature of the water, which is thereafter maintained uniformly at the temperature of most efficient operation as long as the engine is running. (See "Temperature Indicator," page 10.)

Radiator Thermostat

There is no adjustment in connection with the radiator thermostat. The thermostat is filled and sealed at the factory, the liquid determining the temperature at which the thermostat operates.

Water Pump

The water pump shaft is packed against leakage by a gland which can be tightened by turning the gland nut. This nut is held from turning of its own accord by a locking plunger. To tighten the gland nut, lift this plunger, and with a screw-driver or punch, turn the top of the nut toward the engine. Do not tighten the nut more than just enough to prevent leakage. Further tightening causes unnecessary friction on the pump shaft.

Filling and Draining the Cooling System

Except during freezing weather, water should be used in the cooling system. In freezing weather, a suitable anti-freezing solution, such as those described on page 41, must be used.

To add liquid to the cooling system or to refill the cooling system after it has been drained, remove the radiator filler cap and pour the liquid in through the filler.

It is not necessary to add liquid to the radiator whenever the level falls below the filler. There is sufficient liquid in the cooling system if the upper tank of the radiator is half full, and any liquid in excess of this is usually forced out through the overflow pipe as soon as the engine becomes warm. When water is used, any loss from this cause is of little consequence, but in winter, to conserve anti-freeze, it is important to avoid adding more liquid than is necessary.

To drain the cooling system, open the drain valve in the water pump outlet elbow by turning the hexagonal end of the valve counter-clockwise.

Cleaning the Cooling System

The cooling system should be drained and flushed every 4000 miles. If possible this should be done at a Cadillac service station or where facilities

are available for reversing the flow of water through the radiator. If this cannot be done, the following method should be used.

Run the engine until the opening of the radiator shutters indicates that the engine is warm. Stop the engine and immediately open the water pump drain valve.

After the liquid has drained off, refill the cooling system with hot water and repeat the operation described above. If in draining the second time, the water is very dirty it may be advisable to repeat the flushing operation a third time, placing one or two handfuls of sal-soda in through the radiator filler. The sal-soda must not be permitted to get on the finish of the hood or radiator. If sal-soda is used, the cooling system must be drained and flushed again before refilling for use.

CHAPTER IV

Electrical System

THE electrical system comprises the following units: The generator, or source of electrical energy; the storage battery, which stores the current generated; the starting motor, which cranks the engine for starting; the ignition system; the lamps and other devices using electrical current; the ammeter; and the circuit breakers which protect the system. The wiring system connecting these units is the single-wire or grounded type, the engine and frame forming one side of the electrical circuit.

Generation of Current

Generator

The generator is below the right-hand cylinder block at the front of the engine, and is driven by a silent chain from the crankshaft.

At very low engine speeds, the voltage of the current generated is not sufficient to provide current for lighting or ignition, and the battery is then the source of current. To prevent the battery, at such times, from discharging through the generator, a cut-out relay on the generator automatically opens the circuit whenever the generated voltage drops below the battery voltage. At approximately eight miles per hour, the generated voltage is sufficient to operate the cut-out, which then closes the circuit between the generator and the battery and lighting circuits. If no lights are switched on, the entire output of the generator, less the current required for ignition, flows to the battery for recharging it. If all the lights are on, the generator will not generate sufficient current to start charging the battery until a speed of twelve to fifteen miles per hour is reached.

Ammeter

The ammeter on the instrument board indicates the amount of current flowing to or from the battery, except when the starter pedal is down and the starting motor is cranking the engine. When the engine is not running, the ammeter will indicate a current on the discharge side, depending in amount upon the number of lights in use. The rate of charge or discharge when the engine is running depends upon the speed of the engine, whether the thermostat is opened or closed and how many lights are in use, and is equal in amount to the difference between the current generated and the current used by the lights, horn, ignition and other electrical devices. The ammeter does not indicate the current used in cranking the engine.

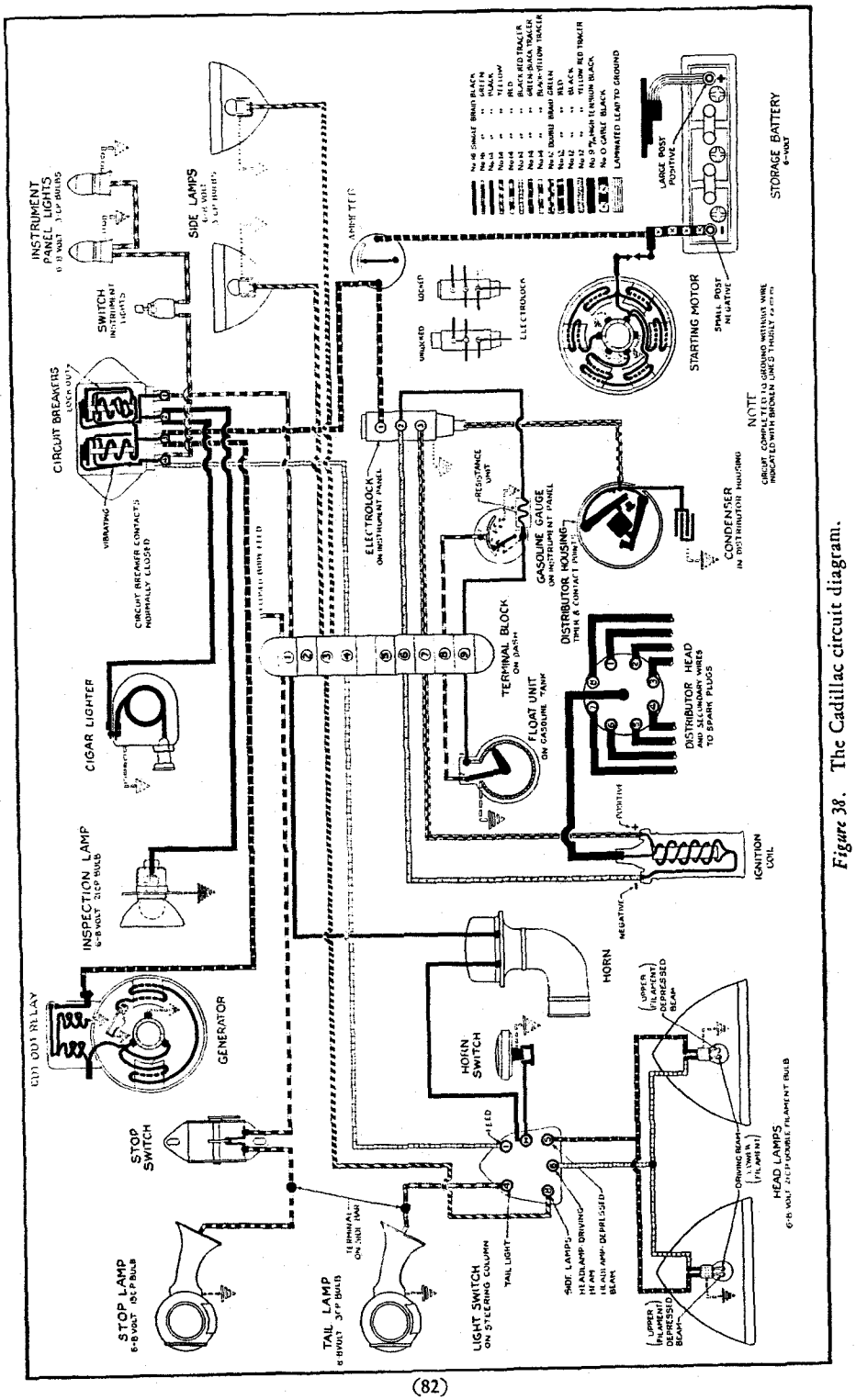

Figure 38. The Cadillac circuit diagram.

Thermostatic Control of Charging Rate

The generator is provided with a thermostatic control. This is so arranged that the current generated is automatically reduced as soon as the temperature of the generator rises above a predetermined point. When the engine is cold, the charging rate is normal. When, due to the combined heat of the engine and the generator, the temperature of the generator reaches the predetermined point, the thermostat operates and the charging rate is correspondingly reduced.

The purpose of this is to give the battery the benefit of a higher charging rate immediately after starting the engine, in order to replace the energy used for starting or for the lights while parking. This also compensates in a measure for seasonal variations, because in cold weather, when the demand on the battery is greater, a longer period elapses after starting the engine before the thermostat operates to reduce the charging rate. It is thus unnecessary to have a different adjustment of the charging rate for winter from that for summer.

Adjustment of Charging Rate

The charging rate must be checked and adjusted before the engine is warm enough for the thermostat to open. All the lights must be off. Start the engine and open the throttle until the ammeter reading ceases to increase and starts to decrease. The maximum reading should not be more than 20 amperes, and ordinarily not less than 18.

These figures are for a cold engine. If the charging rate is adjusted to these figures when the thermostat is open, damage is likely to result to the generator.

The amount of the charging rate is adjusted by changing the position of the third brush on the generator commutator. This brush is accessible after removing the cover band around the rear end of the generator (Fig. 39). The brush holder is held by friction and can

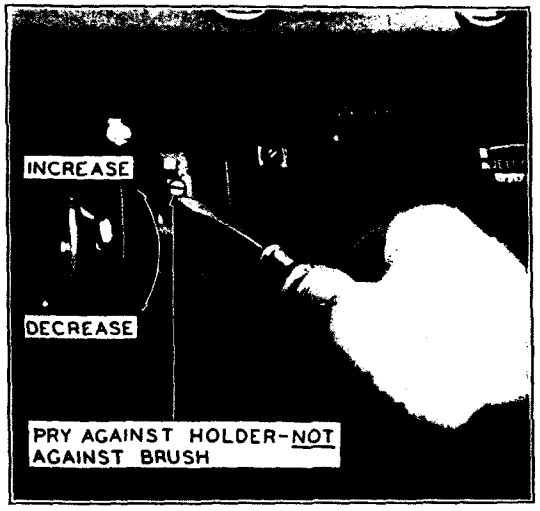

Figure 39. The charging current is adjusted by moving the third brush. This must be done when the engine is cold.

be moved by prying it. Do not pry against the brush itself, and be very careful not to spring the brush holder.

Do not under any circumstances put oil on the commutator of the generator.

Storage Battery

The storage battery is a three-cell, six-volt Exide battery made especially for the Cadillac electrical system by the Electric Storage Battery Company of Philadelphia, Pennsylvania. The battery compartment is between the right-hand running board and the frame. The door of the compartment operates the same as the door of the tool compartment, described on page 31.

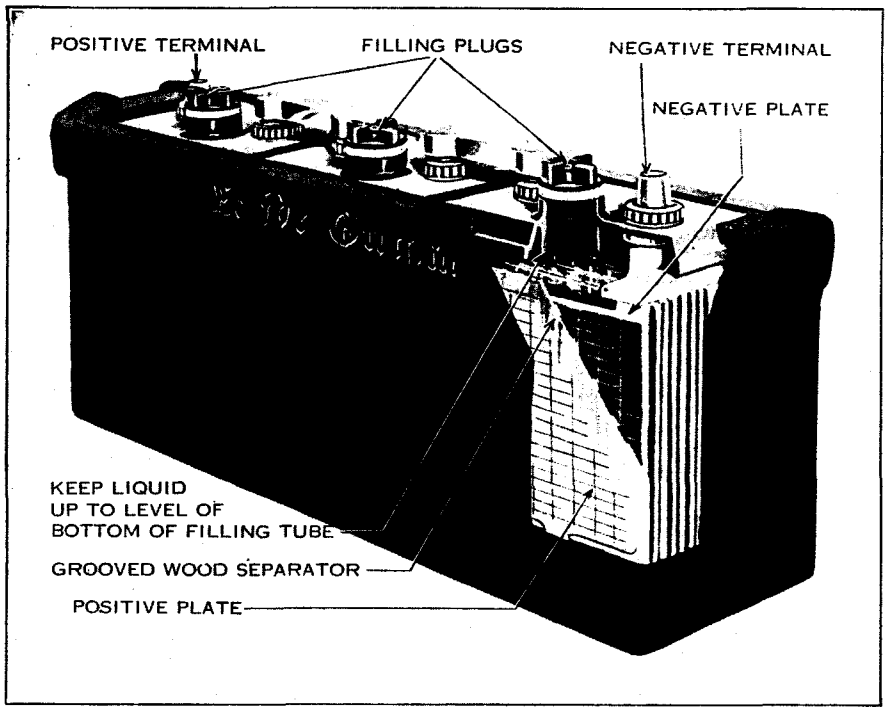

Figure 40. The storage battery is located in the right-hand dust shield.

Adding Water to Storage Battery

The battery is filled with a solution from which the water slowly evaporates, and fresh distilled or other approved water must be added at intervals to maintain the correct level. The level should be inspected at least every 1000 miles, and in warm weather every 500 miles or at least every two weeks.

Distilled or other approved water should be added to bring the level up to the bottom of the filling tubes.

Each cell is provided with a filling tube and vent plug. To remove a vent plug, turn it as far as possible counter-clockwise and then lift it straight up. To install it, set the plug in place and turn it clockwise until tight. If a plug is lost or broken, obtain a new one and install it as soon as possible.

Nothing but pure distilled or other approved water should be added to the battery solution. Melted artificial ice or rain water caught in an earthenware receptacle may be used. Hydrant water or water that has been in contact with metallic surfaces will cause trouble if used. Acid must never be added to the battery.

After adding water to the storage battery in freezing weather, the car should immediately be run far enough to mix the water and acid solution thoroughly. If the car is parked immediately after adding water, the water is likely to stay on top of the acid solution and may freeze, causing extensive damage.

If one cell regularly requires more water than the others, a leaky jar is indicated. A leaky jar should be replaced immediately by a new one, as even a very slow leak will in time result in the loss of all the solution in the cell.

Specific Gravity of Battery Solution

As the storage battery is charged and discharged, the solution reacts chemically with the plates of the battery, the specific gravity of the solution changing as the reaction proceeds. The state of charge of the battery is thus indicated by the specific gravity of the solution. As the battery is charged, the specific gravity of the solution increases, reaching 1.270 to 1.285 when the battery is fully charged. The specific gravity of the solution decreases as the battery is discharged. A fully discharged battery has a specific gravity of 1.150 to 1.165.

A hydrometer is the instrument used to measure the specific gravity of a solution. A hydrometer syringe is a hydrometer especially designed for convenience in testing the specific gravity of the acid solution in the storage battery. A hydrometer syringe can be obtained at any battery service station. Be sure and get a reliable instrument, for cheap ones may be in error as much as 25 or 30 points.

The specific gravity of the acid solution should never be tested immediately after adding distilled water. If the solution is below the plates so that

it cannot be reached with the syringe, add the necessary amount of water and then drive the car for a few hours before taking the hydrometer reading.

Disconnecting Battery

Do not remove the generator or attempt any adjustment of the circuit breakers or remove any of the wires to the circuit breakers without first disconnecting the storage battery.

Never run the engine with the storage battery disconnected. Serious damage to the generator may result.

Exide Depots and Sales Offices

The Electric Storage Battery Company, whose general offices and works are at Allegheny Avenue and Nineteenth Street, Philadelphia, Pennsylvania, has representative stations in towns of any considerable size, as well as sales offices and Exide battery depots in a number of the larger cities. If a storage battery is in need of attention other than recharging, it is advisable to communicate either with a Cadillac service station or with the nearest Exide station or depot. Do not ship a storage battery without receiving instructions.

Starting Motor

Operation of Starter

The starting motor is a series-wound motor, mounted horizontally at the right-hand side of the transmission case. When cranking the engine, the starting motor drives the flywheel through a pinion which meshes with teeth machined on a ring bolted to the flywheel. The pinion is normally held out of engagement with the teeth on this ring. It is moved into mesh with the teeth on the ring by pushing forward on the starter pedal. Further movement of the pedal operates a switch that closes the battery circuit and starts the armature revolving.

If, in pushing down the starter pedal, the ends of the teeth on the pinion strike against the ends of the teeth on the flywheel ring, preventing further movement of the pinion, continued movement of the pedal compresses a spring. As soon as the pedal has been pushed down far enough to close the starting switch, the armature starts to revolve. The pressure of the spring then forces the pinion the rest of the way, completing the meshing operation.

An over-running clutch on the armature shaft prevents the flywheel from driving the starting motor after the engine is running under its own power and before the starter pedal is released.

Ignition

General Description

The function of the ignition system is, first, to multiply the low voltage (six to eight volts) of the storage battery and generator into voltage of sufficient intensity to cause a spark to jump between the electrodes of the spark plugs; and second, to time this spark so that ignition will take place in the proper cylinder at the proper instant.

The Delco single-spark system is used, consisting of a combination timer-distributor unit in connection with a transformer or induction coil. The primary circuit, through which flows the current from the storage battery or generator, includes the primary winding of the ignition coil, the timer contact arms and points, and the condenser, which is enclosed in the timer. The secondary or high-voltage circuit includes the secondary winding on the ignition coil, the distributor and the spark plugs.

Current flows through the primary circuit whenever and as long as either of the two sets of timer contact points is closed. Current flows through the secondary circuit for an instant only when either set of contact points is opened; but the voltage of this current is several thousand times that of the primary circuit and is sufficient to cause a spark at the spark plug.

Timer-Distributor

The timer-distributor is mounted on the top of the crankcase at the front end and is driven by a spiral gear on the camshaft. The shaft of the timer-distributor, which revolves at one-half crankshaft speed, carries a four-lobed cam. As this cam revolves, it actuates the two contact arms alternately, closing and opening first one set of contact points and then the other. The circuit is thus made and broken eight times during each revolution of the cam and eight corresponding sparks are produced at the spark plugs.

In order to procure the maximum power from each explosion, ignition must occur at the right instant in relation to the position of the piston. But the ignition process, although apparently a matter of an instant, consumes a measurable amount of time. It is therefore necessary to break the circuit at the contact points far enough in advance so that actual ignition will take place in the cylinder at the correct time. The lapse of time is always the same, regardless of the speed of the engine, but because the pistons move faster when the engine is running at higher speeds than when it is running at lower speeds, the degree of advance in relation to the positions of the pistons must be increased as the engine speed increases.

This advancing of the relative timing of the spark for higher engine speeds is automatically accomplished by a centrifugal ring governor on the timer shaft below the cam. As the speed of the engine increases, the governor ring assumes a position more nearly horizontal, forcing the cam ahead of the shaft by which it is driven. This causes the contact points to open earlier, starting the ignition process earlier in relation to the positions of the pistons in the cylinders.

In addition to the automatic advance, the timer has a manual control by which the opening of the contact points may be still further advanced or still further delayed. This is operated by a lever on the instrument board (Fig. 1).

The distributor is the mechanism that insures that the high voltage current in the secondary circuit is switched to the proper spark plug at the proper time. It consists of a rotor, which is carried on the upper end of the timer shaft and which has a metal terminal electrically connected at all times with the secondary current from the coil. As the rotor revolves, this terminal faces successively eight metal inserts in the distributor head, which is only a few thousandths of an inch from the rotor. The eight inserts are connected each to a different spark plug. When either set of timer contacts opens, the terminal in the rotor is directly opposite one of the inserts and the high voltage in the secondary circuit jumps from the rotor to the insert, and thence it is conducted to the corresponding spark plug. The relation between the rotor and the timer shaft is such that the spark plugs fire in correct relation to the pistons.

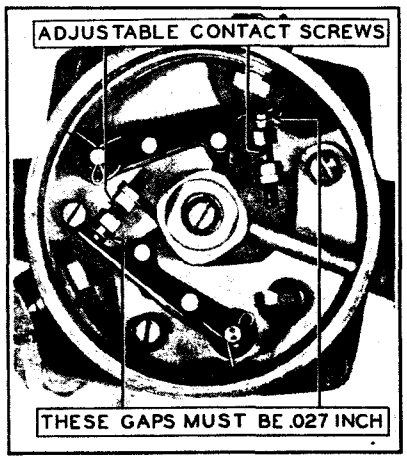

Figure 41. The timer contact points must be correctly adjusted to produce proper ignition.

Adjustment of Contact Points

The gaps between the timer contact arms and the contact screws are accurately adjusted at the factory to the correct amount. As the rubbing blocks on the contact arms wear, however, the gaps decrease and eventually re-adjustment must be made, although ordinarily this is not necessary for many thousands of miles.

To adjust the contact points, remove the distributor head and rotor and turn the distributor shaft until the rubbing block of one of the contact arms is on one of the lobes of the cam. Then adjust the corresponding contact screw so that there is .027 inch gap between the points (Fig. 41).

After adjusting the gap for one set of contact points, turn the shaft until the rubbing block of the other contact arm is on one of the lobes of the cam, and adjust the other set of points.

It is not absolutely necessary to retime the ignition after adjusting the contact points, but it is recommended.

Timing Ignition

All timing of the ignition should be done with the spark control lever fully advanced. Timing the ignition should not be attempted without making sure that both sets of contact points are correctly adjusted for gap as previously directed.

Ignition for the odd-numbered cylinders is provided by one of the contact arms, this arm being mounted on a fixed plate. Ignition for the even-numbered cylinders is provided by the other contact arm, which is mounted on an adjustable plate (Fig. 44). The timing for the odd-numbered cylinders depends only on the position of the cam. The timing for the even-numbered cylinders depends both on the position of the cam and on the adjustment of the plate which carries the second arm. This plate is correctly adjusted at the factory and ordinarily will not need to be readjusted.

To check the timing for the odd-numbered cylinders, disconnect the wire from the spark plug for the No. 1 cylinder, and place the terminal of the wire so that it is about 1/8 inch from the cylinder block. Open the cover on the flywheel inspection hole at the rear of the right-hand cylinder block. Switch on the ignition and crank the engine slowly by hand until a spark jumps from the disconnected wire to the cylinder. Stop cranking at once and observe the position of the flywheel. The mark* $\frac{IG}{1}\,\frac{A}{5}$ on the flywheel should then be opposite the pointer attached to the crankcase.

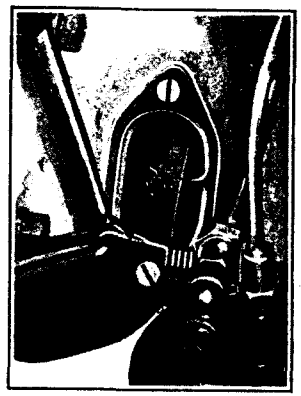

Figure 42. Marks for timing the ignition are stamped on the flywheel.

If the mark on the flywheel has passed the pointer, the ignition is late. If the mark has not reached the pointer, the ignition is early.

To correct the timing, remove the distributor head and rotor, and loosen the screw in the center of the timer shaft. Then carefully turn

*If the engine is equipped with "high-compression" cylinder heads (page 21) disregard the timing marks on the flywheel and time the spark to take place 1/2 inch ahead of center.

the cam either with a wrench or with the rotor (Fig. 43). Turn the cam clockwise to advance the ignition, or counter-clockwise to retard it. After moving the cam, tighten the screw and check by again cranking the engine and noting the position of the flywheel when the spark occurs.

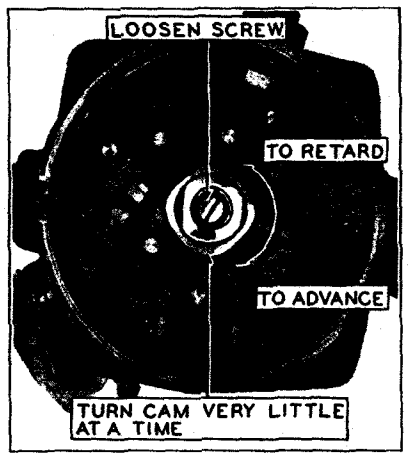

Figure 43. The ignition is timed by adjusting the cam on the timer shaft.

To check the timing for the even-numbered cylinders, disconnect the wire from the No. 2 spark plug. Then crank the engine by hand, the same as before, stopping the instant the spark takes place. The mark $\frac{IG}{2}\,|\,\frac{A}{6}$ on the flywheel should then be opposite the pointer.

If the ignition for the odd-numbered cylinders has been carefully timed, the ignition for the even-numbered cylinders will ordinarily be correct. If it is not, it is best to have the distributor serviced at a Cadillac service station, where a gauge is available for setting the plate which carries the adjustable arm. In an emergency, however, the timing of the even-numbered cylinders can be corrected as follows:

Loosen the two screws shown in Fig. 44. Then carefully turn the eccentric adjusting collar with a screw-driver, turning the collar clockwise to retard the ignition and counter-clockwise to advance it. Be sure to tighten the screws after the correct adjustment has been secured.

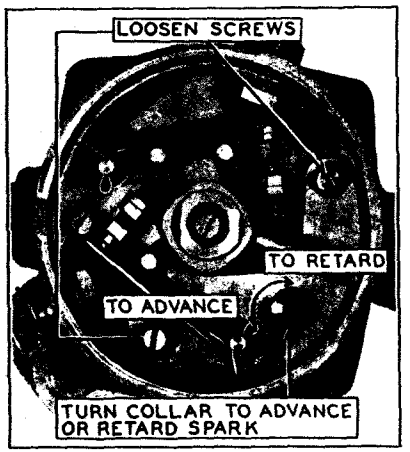

Figure 44. The contact arm for the even-numbered cylinders must be synchronized with relation to the contact arm for the odd-numbered cylinders.

Spark Plugs

For best results, the electrodes of the spark plugs should be .025 to .028 inch apart. If the spark plugs should be removed, it is recommended that the electrodes be inspected and adjusted to this clearance.

Lighting System

Lamp Bulbs

It is recommended that bulbs for the lamps, particularly the two-filament bulbs for the headlamps, be purchased from a Cadillac distributor or dealer. In any event, bulbs should have the correct voltage and candle-power ratings. The bulbs and the lamps in which they are used are as follow:

Lamp	Voltage	Candle-Power
Headlamps	6–8	21 (Two-Filament) Mazda No. 1110
Inspection Lamp	6-8	21
Stop Light	6–8	15
Side Lamps	6–8	3
*Instrument Lamps (2)	6–8	3
*Rear Lamp	6–8	3
Closed Car Dome Lamps	6–8	3
Running Board Step Light	6–8	3

Cleaning Headlamp Reflectors

The headlamp reflectors are plated with pure silver. Although the reflectors ordinarily require no attention, if they should require polishing, extreme care must be exercised to select materials that will not scratch the silver. In polishing reflectors, always rub from the bulb outward, do not rub in circles.

Powdered dry rouge and a chamois skin are recommended. If the reflectors are tarnished, the rouge may be moistened with alcohol. Afterwards, polish with a dry chamois and rouge.

The chamois used for the headlamp reflectors must not be used for any other purpose. It must be soft and free from dust.

Do not touch the reflectors with the bare hands.

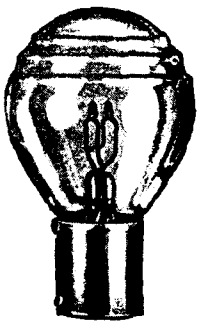

Figure 45. Double-filament headlamp bulb.

Adjustment of Headlamps

Approval of the headlamps by the state authorities is conditional upon the headlamps being adjusted to a definite standard. The directions which follow are for this standard adjustment.

*Bulbs rated at 3-4 volts, such as are used in the rear lamps of some cars, must not be used in these lamps. If installed, they will burn out almost immediately.

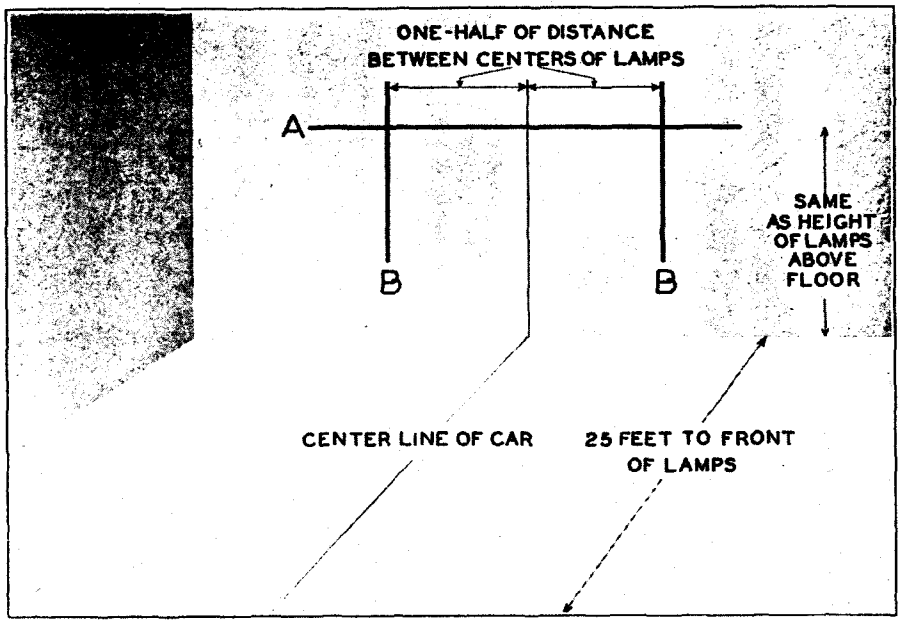

Figure 46. Marks for adjustment of headlamps.

Select a level spot where the car can be placed facing toward, and twenty-five feet distant from, a wall upon which the lines shown in Fig. 46 can be drawn. The adjustment should be made when it is dark enough so that the outlines of the projected beams are plainly visible.

Locate a point on the wall directly opposite the front of the car by sighting through the center of the rear curtain toward the radiator cap. Draw a vertical line on the wall through this point. Measure the distance between the centers of the headlamps, and draw two vertical lines "B" parallel to the center line and distant from it by an amount equal to one-half of the distance between the headlamps. Measure the distance from the headlamp centers above the ground or floor and draw the horizontal line "A" at the same elevation.

The adjustment should be made with the upper beam on, that is, with the lighting switch lever at "Up." Cover the headlamp that is not being adjusted.

Turn the adjusting screw, which is in the back of the headlamp shell, until the small beam of high intensity at the top is most clearly defined. (Fig. 47a.) This focuses the lamp.

With the car fully loaded, loosen the nut on the headlamp support and aim the high intensity beam so that it is centered on the corresponding vertical line "B," with the upper part cut off on the horizontal line "A."



Figure 47a. Upper beam of right headlamp.



Figure 47b. Lower beam of same lamp.

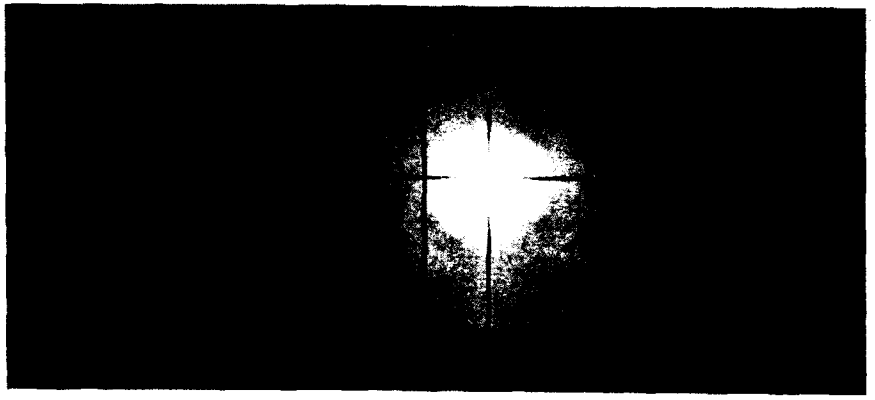

Figure 47c. Upper beam with lens removed.

(Fig. 47a.) Tighten the nut securely, taking care not to move the lamp out of adjustment.

No adjustment for the lower beam is necessary. If the lamp has been correctly focused and aimed with the upper beam on, the lower beam will appear as in Fig 47b.

If it is desired to focus the lamp with the door removed, this can be done. Fig. 47c shows the upper beam as it should appear with the lens removed.

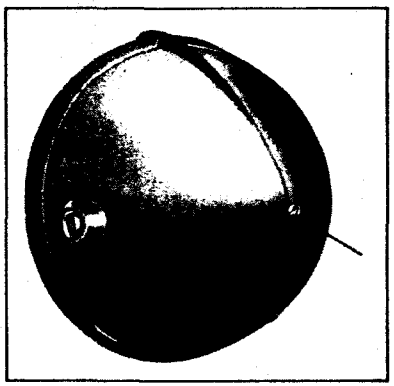

Figure 48. Headlamp adjusting screw.

CHAPTER V
Clutch and Transmission

Clutch

The Cadillac clutch is a disc clutch of exclusive design. There are three driving plates, the center plate being bolted to the flywheel. The front and rear driving plates float or slide on pins carried by the center plate.

There are two driven discs, one between the center and rear driving plates and the other between the center and front driving plates. Both discs are bolted to a central hub which slides on the splined end of the clutch shaft. The discs are wheel shaped, lined on both sides with a ring of friction material.

When the clutch is engaged, the plates and discs are pressed firmly together under the pressure of twelve 70-lb. springs. The driven discs then revolve with the flywheel, and the engine, if running, drives the transmission.

When the clutch pedal is pushed down to disengage the clutch, a series of levers releases the pressure of the springs and the driven discs separate from the driving plates, permitting the flywheel to revolve independently of the transmission.

The clutch itself requires no adjustment or attention other than lubrication of the clutch thrust bearing, as directed on page 57. Adjustment of the clutch release rod, however, may be necessary after the car has been driven some distance.

Adjustment of Clutch Release Rod

As described on page 16, the clutch pedal is purposely given about one inch of "lost motion." That is, the clutch does not begin to disengage until the pedal has been moved down about an inch from its released position. This lost motion is necessary in order to allow the clutch discs to come closer together as the facings are reduced in thickness. The lost motion gradually decreases as the clutch is used, and eventually will be taken up. Before this happens, the clutch release rod must be readjusted to restore the lost motion; otherwise the clutch discs will slip and the engine will not drive the car.

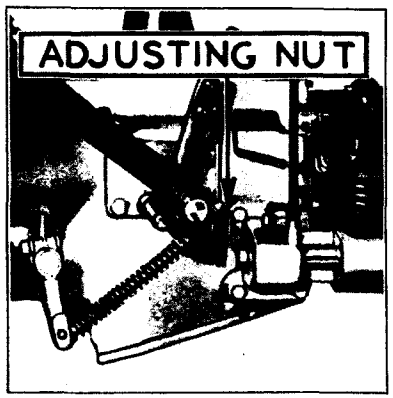

Figure 49. The clutch control must be adjusted so as to give the clutch pedal proper play.

To make the adjustment, unscrew the nut (Fig. 49) on the end of the rod until the clutch pedal has a movement of one inch without starting to disengage the clutch.

The nut must be turned a half-turn at a time.

Transmission

The purpose of the transmission is to provide a means for varying the ratio and direction of the rear axle speed in relation to the engine speed. Three things are accomplished by doing this: First, the engine is enabled to drive

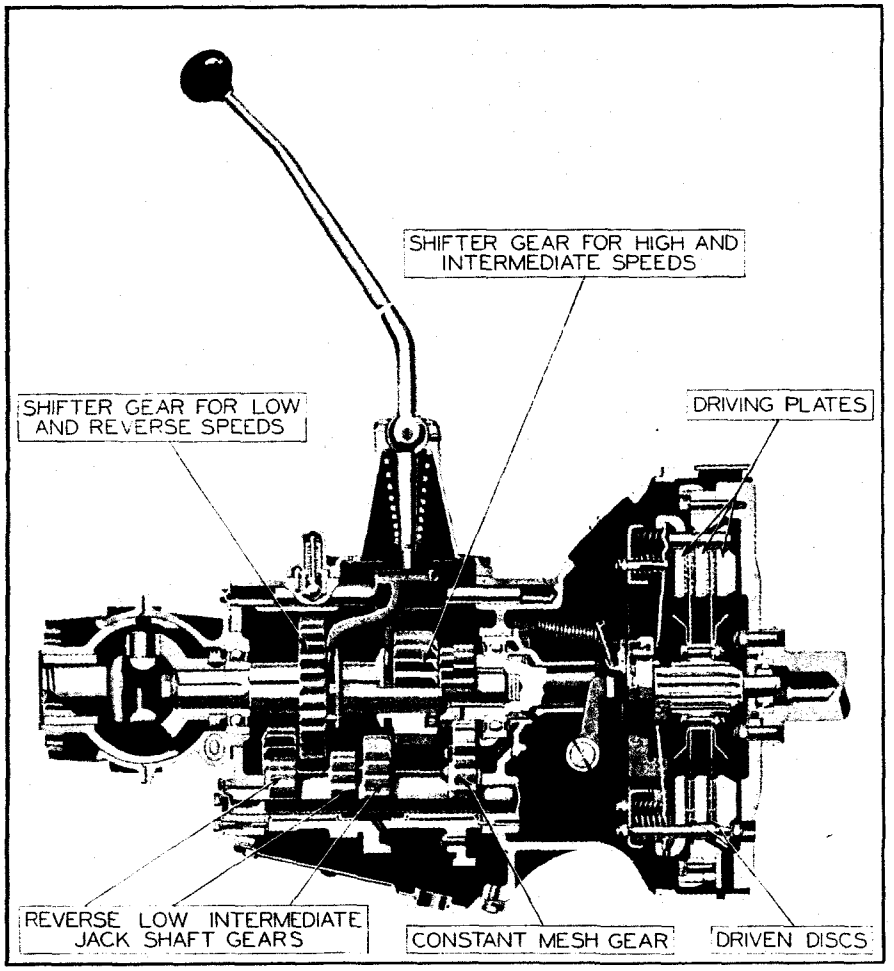

Figure 50. Sectional view of clutch, transmission and universal joint.

the car backwards. Second, the engine is permitted to revolve fast enough to develop the power necessary for starting and for driving the car at extremely low speeds. Third, the turning effort of the engine is multiplied, so that it may be sufficient for climbing steep hills and pulling through deep sand and mud.

The Cadillac transmission is known as the selective, sliding gear type. It has three speeds forward, of which one is direct drive, and one speed in reverse. Selection of the various speeds is accomplished by movement of two shifter gears (Fig. 50), which are controlled by the transmission control lever. The positions of the gears corresponding to the five positions of the control lever, as illustrated in Fig. 7, are as follow:

Neutral—When the control lever is in neutral position, the shifter gears are in the positions shown in Fig. 50, that is, they are not in mesh with any of the other gears.

Low—When the control lever is moved from neutral to low, the low and reverse shifter gear is moved forward into mesh with the low gear on the jack-shaft. The ratio of engine speed to propeller shaft speed in low is approximately 3 to 1.

Intermediate—When the control lever is moved from low to intermediate, the low and reverse shifter gear is first returned to its neutral position and the high and intermediate shifter gear is then moved back into mesh with the intermediate gear on the jackshaft. The ratio of engine speed to propeller shaft speed in intermediate is approximately 1.7 to 1.

High—When the control lever is moved from intermediate to high, the high and intermediate gear is first moved forward out of mesh with the intermediate gear on the jackshaft, and then farther forward until teeth, cut internally in a recess in the high and intermediate shifter gear, engage teeth on the extreme end of the gear on the clutch shaft. The drive is then direct from the clutch shaft to the transmission main shaft without reduction.

Reverse—When the control lever is moved from neutral to reverse, the low and reverse shifter gear is moved back into mesh with an idler gear, which is at all times in mesh with the reverse gear on the jackshaft. The interposition of the idler gear reverses the direction of rotation. The ratio of engine speed to propeller shaft speed in reverse is approximately 3.7 to 1.

CHAPTER VI

Steering Gear

Description

THE Cadillac steering gear is of the worm and sector type. In this construction, the tube or shaft, to which the steering wheel is fastened, has on its lower end a worm which engages a sector gear. The steering arm is fastened to the shaft of this sector gear.

The steering gear has three adjustments: one to adjust the position of the sector in its relation to the worm; a second to take up end-play in the worm thrust bearings; and a third to take up end-play in the sector shaft.

Adjustment of Worm and Sector

This adjustment consists in moving the sector away from or toward the worm, so as to give the proper amount of backlash. Provision is made for doing this by means of the sleeve or bushing in which the sector shaft turns. The outside of this bushing is eccentric, and by turning the hexagonal end of the bushing, which projects through the side bar of the frame, the sector can be moved away from or toward the worm. To make the adjustment, proceed as follows:

Turn the steering wheel so that the front wheels point straight ahead. Loosen the locking screw shown in Fig. 51. Then move the locking arm down to tighten the adjustment, or up to increase the backlash. The steering wheel should have from one-half to three-quarter inch play. If the amount of backlash to be taken up is very great, it may be necessary to remove the locking arm and turn it over so as to place it in a different position on the hexagonal end of the eccentric bushing, in order to bring the locking arm in such a position that it can be locked by the screw. In order to turn the locking arm over, it is necessary to bend the arm so that the hexagonal end fits squarely on the end of the eccentric bushing when the other end is against the frame.

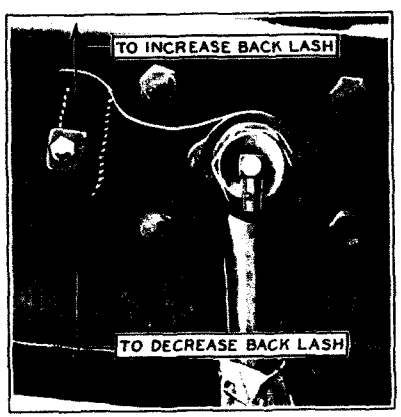

Figure 51. This adjustment is to take up backlash between the worm and sector.

Adjustment of Worm Thrust Bearings

To take up end-play in the worm thrust bearings, first back off the worm and sector adjustment (described in the preceding section) and loosen

the cap on the support bracket on the instrument board. Loosen the clamping screw shown in Fig. 52. Then with a large wrench turn the adjusting nut until all play in the bearings is taken up. Tighten the clamping screw and the cap on the instrument board bracket after the proper adjustment has been made. Finally, take up the worm and sector adjustment again.

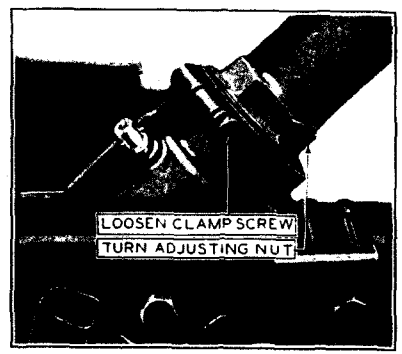

Figure 52. This adjustment is to take up end-play in the worm thrust bearings.

Adjustment of Sector Shaft

The third adjustment is to take up end-play in the sector shaft. This adjustment is on the rear cover of the steering gear housing and is rarely necessary.

To make the adjustment, loosen the lock nut shown in Fig. 53, and turn the adjusting screw until the end play is taken up.

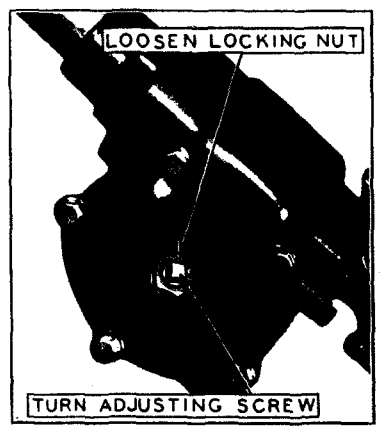

Figure 53. This adjustment is on the cover plate of the steering gear housing, and is to take up end play in the sector shaft.

Steering Connecting Rod

The steering connecting rod, which connects the steering arm at the steering gear with the steering arm on the front axle, has a ball and socket joint at each end. Wear at these joints can be taken up by adjusting the screw plugs in the ends of the rod. The plugs should be screwed in tight and then backed off one cotter pin hole.

CHAPTER VII

Front Axle

Description

The Cadillac front axle is of the reverse-Elliot type, in which the spindles are yoked or forked to receive the ends of the center member of the axle. The thrust is taken by a tapered roller bearing in the upper fork of the spindle.

Stop Screws

It is desirable to have the smallest turning radius possible without the front wheels scraping at any point on the chassis. The tires should clear the chassis by at least ½ inch.

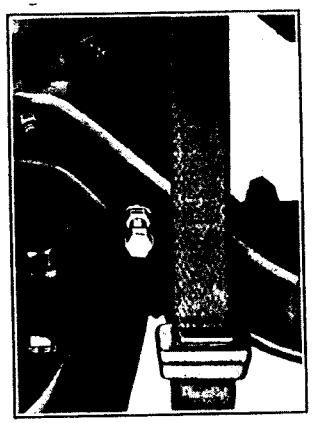

Figure 54. The stop screws at the ends of the front axle should be adjusted so as to prevent the tires from scraping on the chassis.

To prevent any interference, stop screws (Fig. 54) are provided on the ends of the axle. The stop screw at the right-hand end of the axle limits the angle to which the wheels can be turned to the right. The stop screw at the left-hand end of the axle limits the angle at which the wheels can be turned to the left.

Alignment of Front Wheels

The correct amount of toe-in for the front wheels is not less than ⅛ inch nor more than ¼ inch. Every reliable garage has a gauge for measuring this distance. In the absence of such a gauge, it may be measured in the following manner:

Pull the car forward one or two feet. Then spread the wheels as far apart as possible by pushing on both tires at the same time. This will duplicate in the steering connections the conditions that exist on the road.

Locate on the side of each tire a point approximately 9 inches above the floor, and at the widest part of the tire, marking this point with chalk (Fig. 55). Measure the distance between these two points, using a tape measure or two yard-sticks placed so they overlap.

Pull the car forward until the two chalk marks pass under the axle and are again 9 inches above the ground, but to the rear instead of in front of the

axle. Then measure the distance between the two chalk marks again. The difference between the two measurements should be not less than ⅛ inch nor more than ¼ inch.

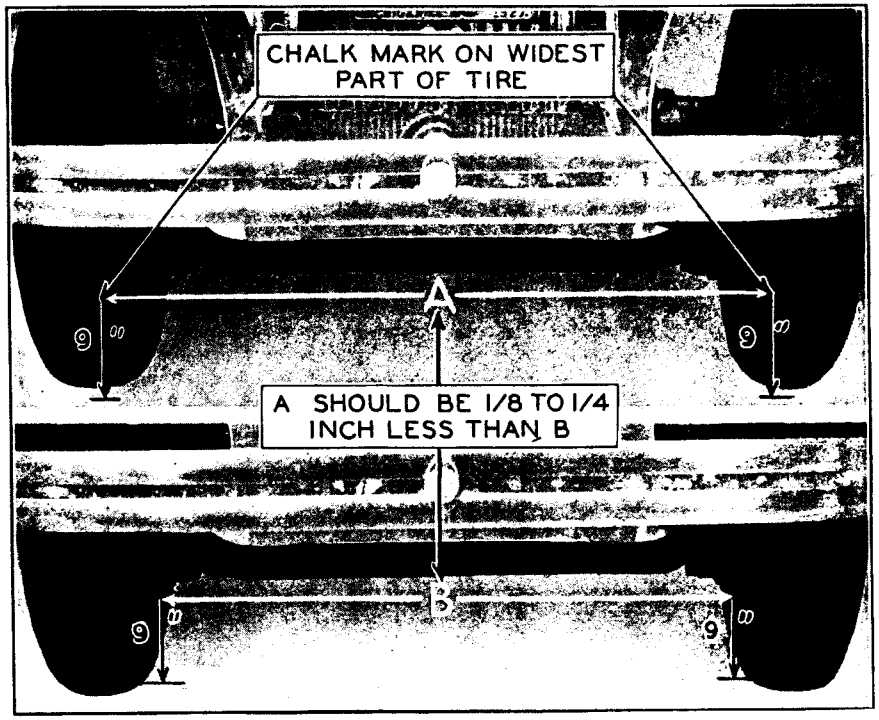

Figure 55. Alignment of the front wheels is important to give proper steering and prevent excessive tire wear.

Adjustment of the front wheel alignment is made by loosening the clamp screws at the ends of the parallel rod and turning the rod, which has right-hand threads at one end and left-hand threads at the other.

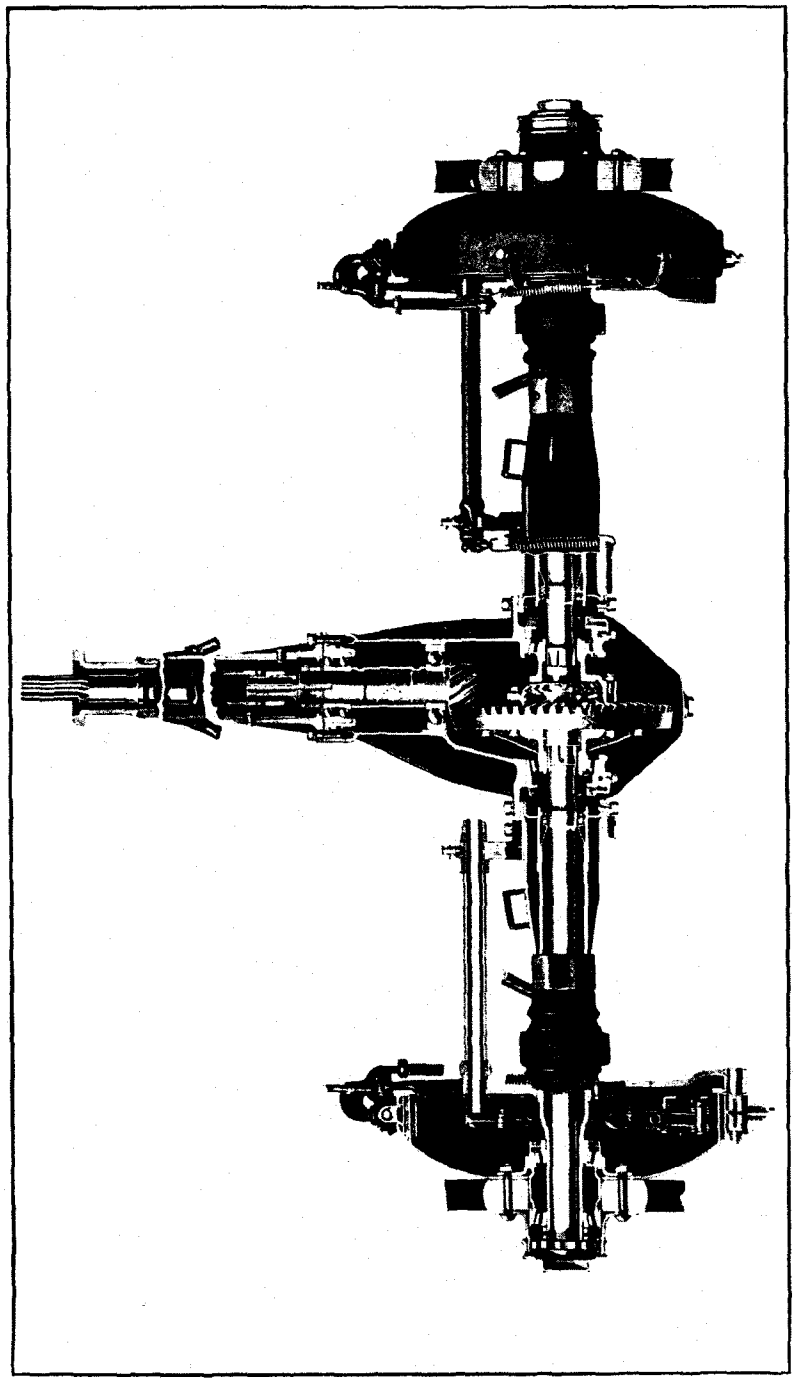

Figure 56. Sectional view of the rear axle.

CHAPTER VIII

Rear Axle and Torsion Tube

THE rear axle is of the full floating type. The flanges on the outer ends of the axle shafts are machined to form 14 teeth which engage recesses cut in the wheel hub. The inner ends of the shaft are splined to fit the holes in the differential gears. The ring gear mount, which contains the differential, is mounted on tapered roller bearings supported by the differential carrier. The pinion shaft is mounted on ball bearings in the differential carrier.

Except for lubrication as described in Part II, the rear axle requires no attention. The rear axle gears are correctly adjusted at the factory and no attempt should be made to readjust them. If attention appears to be required, a Cadillac service station should be consulted.

The tractive effort of the rear wheels is transmitted to the car through a torsion tube which encloses the propeller shaft and which is bolted at the rear end to the differential carrier and at the front end to a ball and socket joint on the transmission. The torsion tube is trussed by strut rods running diagonally to the ends of the rear axle housing.

CHAPTER IX

Wheels

Tire Balancing Marks

The tires are balanced to offset the weight of the valve stem. If a tire is removed, it must be re-installed in its original position with respect to the rim; otherwise the tire and wheel will be unbalanced.

A small red square is accordingly branded in the rubber on the side of each tire. This mark must always be in line with the valve stem.

Tires and Rims

Illustrated directions for removing a rim with tire from a wheel and installing a rim with tire on a wheel are given in Fig. 22. Directions for removing a tire from a rim and installing a tire on a rim are given in Fig. 57

Do not under any circumstances attempt to remove a tire from a rim without deflating the tire.

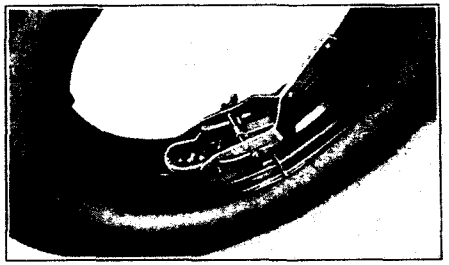

With a hammer disengage the lug that locks the ends of the rim together. Then apply the rim tool, which is included in the tool equipment. This is done by hooking the U-shaped member over the lug next to the valve stem, and inserting the bolt through the holes in the lug on the other side of the split in the rim.

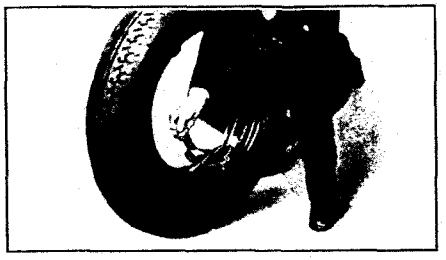

Pull the handle of the tool up and over as far as will go, thus drawing the one end of the rim up over the other.

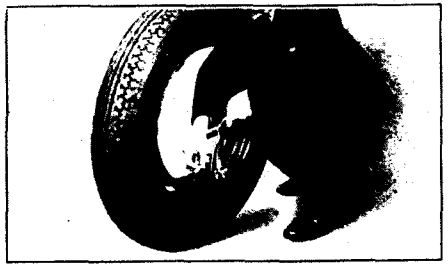

The locking tongue can then be placed back of the rivet as shown, and will hold the rim in the split position.

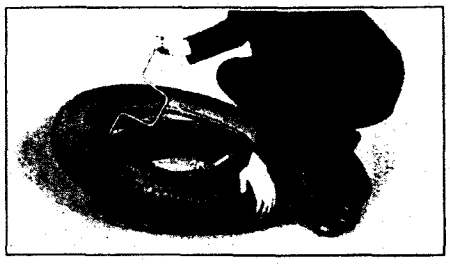

The tire can then be forced off the rim, using the "screw-driver" end of the brace wrench.

After re-installing the tire, grasp the handle of the tool, disengage the locking tongue and allow the rim to return slowly to position. After removing the tool, be sure to drive the locking lug back into place.

Figure 57. Removing tire from rim.

Caution in Adjusting Wheel Bearings

The adjustment of wheel bearings or the removal of the wheels should not be attempted by one unfamiliar with work of this nature. It is recommended that the car be taken to a Cadillac service station if possible. In any event great care must be exercised in adjusting wheel bearings not to get them tight. These bearings will revolve even when adjusted very tightly, but that condition is sure to prove disastrous. They should be adjusted so that a very slight amount of play or looseness may be discerned.

If, after a bearing has been adjusted to a point that is apparently correct, the locking device cannot be placed in position without changing the adjustment, it is far better to loosen the adjustment until it can be secured with the locking device than to tighten the bearing adjustment.

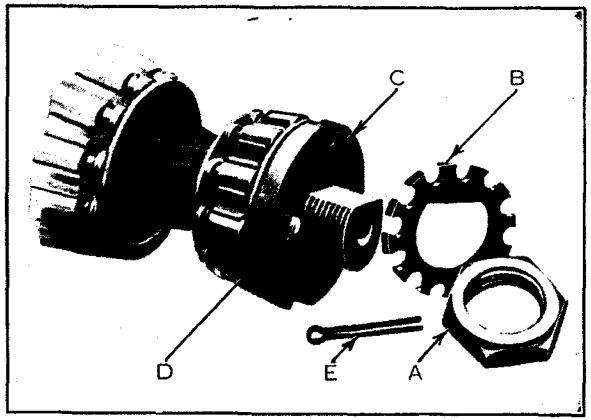

Figure 58. Front wheel bearings

Removing Front Wheel

To remove a front wheel, first jack up the axle until the wheel is free from the ground and then proceed as follows:

Remove the hub cap by unscrewing it. Remove the cotter pin "E" (Fig. 58). Remove the lock nut "A." Remove the serrated washer "B." Remove the adjusting nut "C." The wheel may then be removed by pulling it straight off.

Installing Front Wheel and Adjusting Bearings

Before installing the wheel, make sure the bearings are clean and that they are packed in a light grease that is free from dirt and grit.

Set the wheel in place on the spindle and adjust the nut "C" (Fig. 58) very carefully, following the caution above. Install the serrated washer

"B," making sure that one of the notches in the washer fits over the stud "D" on the adjusting nut. Replace the lock nut "A" and tighten it firmly, locking it with the cotter pin "E."

It is always better to adjust wheel bearings too loosely than too tightly. If, after the adjustment is apparently correct, the notch in the washer "B" is not directly over the stud "D," loosen the adjustment rather than tighten it.

Removing Rear Wheel

To remove a rear wheel, first jack up the axle until the wheel is free from the ground and then proceed as follows:

Remove the hub cap "D" (Fig. 59) by unscrewing it. Remove the spring locking ring "F." Withdraw the axle shaft "E." With a screw-driver or blunt tool straighten the lug of the outer lock washer "B" where it has been bent over the lock nut "A." Unscrew the lock nut "A." Remove the washers "B" and the adjusting nut "C." The wheel can then be removed by pulling it straight off.

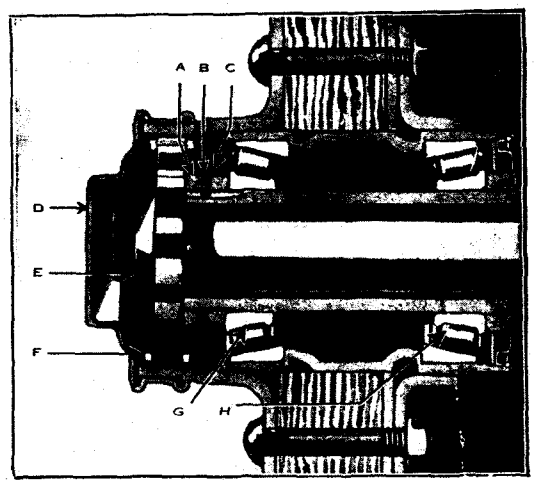

Figure 59. Sectional view of rear wheel hub, showing bearings.

Installing Rear Wheel and Adjusting Bearings

Before installing the wheel, make sure that the bearings are clean and packed in a light grease that is free from dirt and grit.

Set the wheel in place upon the axle and adjust the nut "C" (Fig. 59) very carefully. Install the lock washers "B," using new washers or straightening the ones removed if new ones are not available. In placing the washers

in position, reverse the outer one with respect to the inner so that the lugs on one washer are opposite the spaces between the lugs on the other washer; that is, so that the lugs on the two washers are staggered. Install and tighten the lock nut "A." Next, select that lug on the inner washer that falls nearest to the center of one of the flat sides of the adjusting or inner nut, and with a screw-driver or other suitable tool bend this lug over the nut. In the same way bend one of the lugs of the outer washer over one of the flat sides of the locking or outer nut. In bending the lugs of the locking washers, take care not to alter the adjustment of the inner nut or loosen the outer nut.

CHAPTER X

Brakes

General Description

THERE are three pairs of brakes: The rear wheel external brakes, the rear wheel internal brakes, and the front wheel brakes, which are also internal. The rear wheel external brakes and the front wheel brakes are operated by the brake pedal and comprise the foot brakes. The rear wheel internal brakes are operated by the hand lever and are used principally for locking the rear wheels when the car is standing.

The purpose of the front wheel brakes is to add to the braking ability as much as is consistent with safety. It is not desirable to attempt to secure the maximum possible braking effect on the front wheels for the reason that, when a front wheel slides without rotating, it has no power to change the direction of the car.

Cadillac front wheel brakes are accordingly designed so that when the foot brakes are applied while the steering wheel is turned to the right or left, only the brake on the inside wheel is effective and the brake on the outer wheel is released, leaving the outer wheel free to rotate. It is thus impossible to lock both front wheels even on slippery pavement unless the car is moving straight ahead. If, while the car is moving straight ahead on slippery pavement, the brakes should be applied with sufficient pressure to lock both front wheels and it then becomes necessary to make a turn, the car will instantly respond because the brake on the outer wheel is automatically released as soon as the steering wheel is turned.

Each foot brake has provision to compensate for wear on the brake lining. The adjustment by which this compensation is effected is at the brake itself rather than in the connections. Cadillac brakes must *not* be adjusted to compensate for wear by adjusting the pull rods or stop screws.

Temporary Adjustment

As described on page 17, the Cadillac two-stage brake pedal automatically notifies the driver when the foot brakes require adjustment. It is recommended that the car be taken to a Cadillac service station for attention when necessity for adjustment is thus indicated.

If, however, the adjustment is neglected and as a result the pedal touches the floor boards before the brakes are fully applied, an emergency adjustment can be made by screwing down the adjusting nuts 5, (Fig. 60) one or more half-turns. These nuts lock every half-turn and must be turned a half-

turn at a time. The nuts must not be turned down far enough to cause the brakes to heat and they must be turned down the same amount on both sides.

This temporary adjustment must be followed by a thorough adjustment of both front and rear brakes as soon as possible.

Adjustment of Rear Wheel Brakes

The most important thing in adjusting brakes is to secure the proper uniform clearance between the brake lining and the drum. A feeler .030 inch thick should be used to test the clearance.

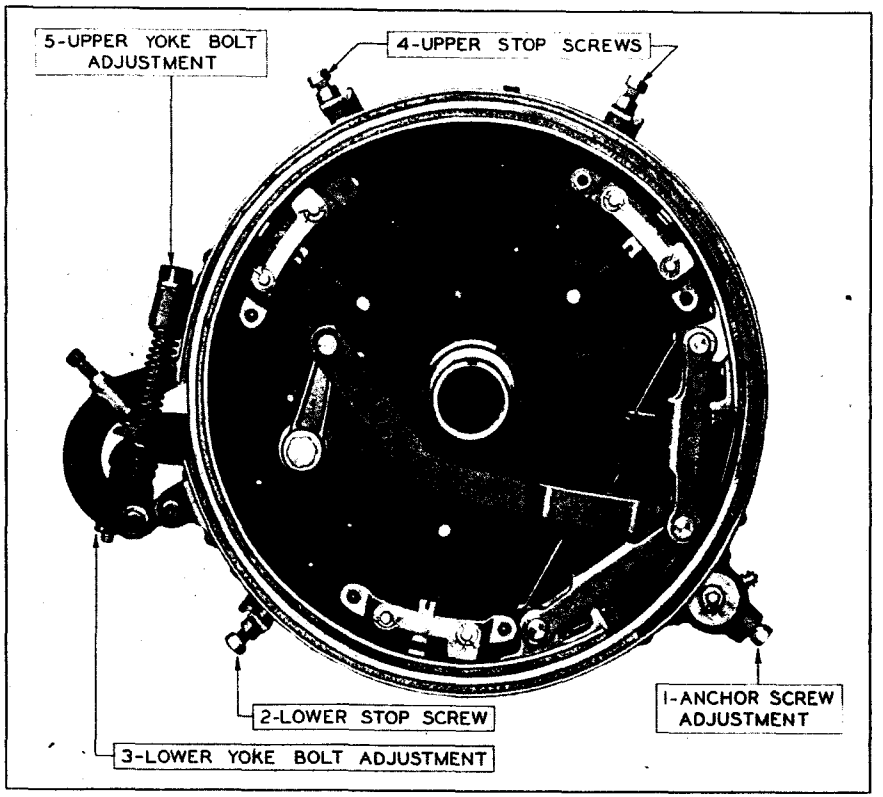

Figure 60. The left-hand rear brakes, shown with the wheel removed. The adjustments should be made in the order shown.

The first adjustment is that of the anchor adjusting screw (1, Fig. 60). Adjust this screw until the clearance between the brake drum and those parts of the lining nearest the anchor is .030.

Second: Adjust the stop screw (2) and the nut (3) on the support so that there is .030 inch clearance between the lower part of the brake band and the drum.

Third: Adjust the stop screws (4) which are above the upper part of the brake band so that there is .030 inch clearance between this part of the band and the brake drum.

Fourth: Adjust the nut (5) on the upper end of the yoke bolt so that the end of the upper part of the brake band has .030 inch clearance.

This procedure should be followed first on one brake, then on the other.

Do not change the adjustment of the stop screw in the lever nor of the rods which operate the brakes. The brakes should be adjusted only by the screws and nuts described. The brake rods are correctly adjusted at the factory and should not be tampered with.

Adjustment of Front Wheel Brakes

A temporary adjustment of the front wheel brakes can be made as follows:

Jack up the axle so as to permit both wheels to turn free.

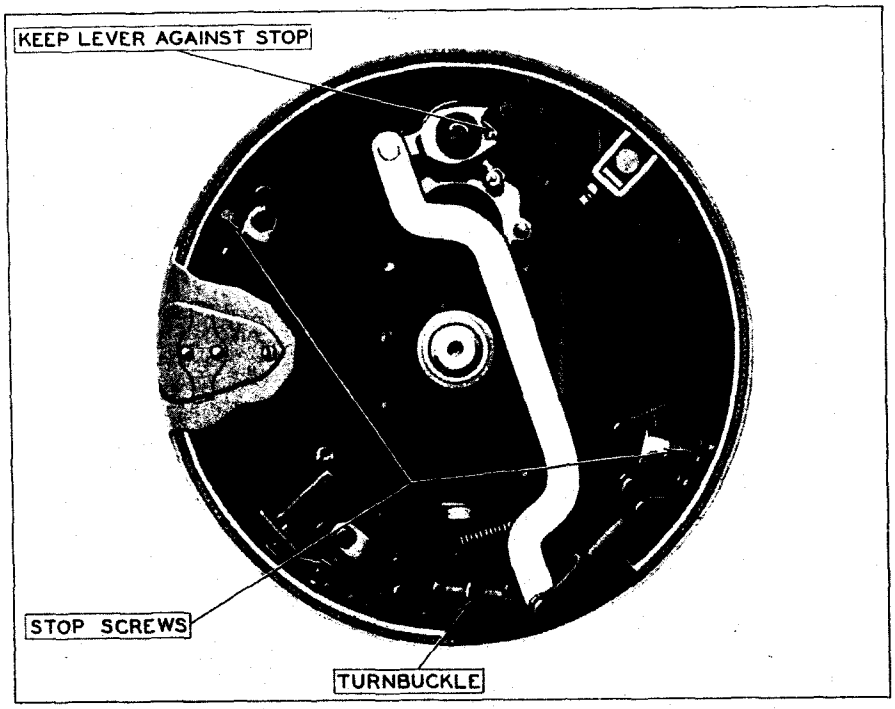

Figure 61. This shows the points of adjustment for the front wheel brakes.

Remove the inspection hole cover in the brake drum. (On cars equipped with disc or wire wheels, the wheel must be removed in order to reach this cover.)

Adjust the three stop screws (Fig. 61) and the turnbuckle so that, with the brakes released and the lever against the stop, there is a uniform clearance of .015 between the brake drum and the lining. The turn-buckle has right-hand threads on one end and left-hand threads at the other.

Before lowering the axle, try the wheels with the brakes partly applied to see that both brakes have the same effect. If correction is necessary, back off the adjustment on the tighter brake.

Unless the brake lining is badly worn, this adjustment will answer until a more thorough adjustment can be made. As soon as possible after making the temporary adjustment, the car should be taken to a Cadillac service station for inspection and for such further adjustment as may be necessary.

CHAPTER XI

Repair Parts

Genuine Cadillac Parts

CADILLAC owners are cautioned against permitting the use of other than genuine Cadillac parts in the repair of their cars. The quality of the Cadillac car is identical with the quality of its component parts, the production of which is based upon more than twenty-five years of experience in designing, manufacturing, and inspecting. No other individual or organization has access to the data resulting from this experience nor could they possibly have the same interest in protecting the owners of Cadillac cars.

Uniform Parts Prices

Cadillac parts are sold at uniform prices throughout the United States, and are not subject to the addition of transportation, excise or other supplementary charges. Printed price lists published by the Cadillac Motor Car Company are open to inspection by owners at any authorized Cadillac distributor's or dealer's establishment.

Ordering New Parts

With many thousands of Cadillac automobiles in use, it is obviously impractical to deal directly with each Cadillac owner. We cannot open accounts with any except regular distributors with whom annual contracts are made.

To avoid unnecessary delay and correspondence, new parts should, where possible, be ordered from the distributor or dealer from whom the car was purchased or from the nearest Cadillac distributor or dealer, who carries a large stock and is generally in a position to supply a part immediately. If he cannot do so, he can order it. Where, however, conditions are such as in our judgment to warrant it, we will fill orders for parts at current list prices, f. o. b. factory, provided the order is accompanied by cash.

In ordering parts, either from a Cadillac distributor or from the factory, send the engine number and the unit assembly number (see page 114) with an accurate description of the part desired, preferably accompanied by a sketch with dimensions. If this cannot be done, send the part itself properly tagged and with transportation charges prepaid. (See below under "Returning Parts.") Otherwise prompt and intelligent filling of the order will be impossible.

Our responsibility ceases in all cases with delivery to the transportation company.

Returning Parts

In event parts are returned, transportation charges must be prepaid or the parts cannot be accepted. They should be tagged properly with the name of the owner and the engine number of the car. A letter should be sent, giving complete instructions regarding the disposition of the parts.

Tires, Speedometer and Clock

In cases of repairs to tires, speedometers or clocks, correspondence should be opened with the manufacturers or their respresentatives. If necessary, the parts should be sent to them. Transportation charges should be prepaid.

CHAPTER XII

Specifications and License Data

Type of engine	8 cyl. V-type
Diameter of cylinder bore	$3\frac{5}{16}$ in.
Length of stroke	$4\frac{15}{16}$ in.
Piston displacement	341 cu. in.
Horsepower (N. A. C. C. rating)	35.1
Engine number	See below
Diameter of crankshaft main bearings	$2\frac{3}{8}$ in.
Exhaust valves	$1\frac{1}{2}$ in.
Inlet valves	$1\frac{1}{2}$ in.
Capacity of gasoline tank	21 gals.
Capacity of engine lubricating system	2 gals.
Capacity of cooling system	6 gals.
Capacity of transmission	$2\frac{1}{2}$ qts.
Capacity of rear axle	$2\frac{1}{2}$ qts.
Tires	32x6.75 (low pressure)
Wheelbase	140 in.

Engine and Unit Assembly Numbers

EACH Cadillac car when shipped carries an engine number which is also a serial number. This is the number to be used in filling out license and insurance applications and in general reference to the car. The engine number is stamped on the car in two places: On the name plate on the front face of the left side of the dash and on the crank case just below the water inlet on the right hand side.

The various units such as the transmission, steering gear, etc., also carry unit assembly numbers. These are located as described below. It is important in ordering parts to give, not only the engine number of the car, but also the unit assembly number of the unit to which the part belongs.

Transmission number—on the upper left-hand edge of the flange by which the transmission is bolted to the crankcase, or on the left-hand side of the transmission case, just above the clutch and brake pedal bracket.

Steering gear number—on the steering gear housing, just below the grease gun connection.

Carburetor number—on right front face of the flange by which the carburetor is attached to the intake header.

Generator number—on the side of the generator just in front of the cut-out relay.

Starting motor number—on the right-hand side of the starter, just below the switch.

Front axle number—on the upper surface of the axle I-beam at the right-hand end just above the steering stop screw.

Rear axle number—on the rear surface of the axle housing just to the right of the cover plate.

Chassis (frame) number—on the upper surface of the left-hand side bar opposite the steering gear.

The Cadillac Motor Car Company reserves the right without notice to make changes in design, construction and specifications.

INDEX

A

Accelerator (see throttle control)..... 10
Accelerator, use of before engine is warm.. 45
Adding water to storage battery..... 84
Adjustment of brakes.....108
Adjustment of carburetor..... 74
Adjustment of clutch release rod..... 95
Adjustment of generator charging rate.... 83
Adjustment of headlamps..... 91
Adjustment of steering gear..... 98
Adjustment of timer contact points..... 88
Air compressor for tires..... 34
Alcohol as anti-freeze..... 41
Alcohol, effect of, on finish..... 42
Alignment of front wheels.....100
Ammeter..... 18
Ammeter, its use..... 82
Anti-freezing solutions..... 41
Axle, front.....100
Axle, rear.....103
Axle, rear, add lubricant to..... 58

B

Balancing marks on tires.....103
Battery, storage..... 84
Bearing, clutch thrust, to grease..... 58
Bearings, main and connecting rod..... 70
Bearings for wheels, adjustment of.....105
Body, care of..... 61
Brake adjustment.....108
BRAKES.....17, 108
Brakes, general description of.....108
Bulbs for lamps, voltage..... 91
Button, carburetor enriching..... 11

C

Carburetor, adjustment of..... 74
Carburetor enriching button..... 11
Carburetor enriching button, use of in cold weather..... 44
Carburetor, to prime..... 45
Capacity of cooling system..... 42
Caps, tire valve..... 33
CARE OF BODY..... 61
Care of finish on body when new..... 61
CARE OF TIRES..... 63
Changing tires..... 37
Changing tires, use of jack in..... 36
Chassis lubricant..... 50
Chassis lubrication diagram..... 58
Choke rod..... 11
Choke rod button (carburetor enriching button) use of in cold weather..... 44
Cigar lighter and inspection lamp..... 26
Circulating system for oil..... 52
Circulation of water..... 78
Cleaner for windshield..... 26
Cleaning headlamp reflectors..... 91
Cleaning the cooling system..... 79
Cleaning upholstery..... 62
Cleaning windows, closed cars..... 62
Clock..... 27
Clock, repairs to.....113
CLUTCH AND TRANSMISSION..... 95
Clutch, construction of..... 95
Clutch pedal..... 15
Clutch release rod, adjustment of..... 95
Clutch thrust bearing, to grease..... 58
Coasting..... 21
COLD WEATHER OPERATION..... 41
Compressor (air pump) for tires..... 34
Contents..... 5
Contact points, adjustment of..... 88
CONTROLS AND INSTRUMENTS..... 9
Control, spark lever..... 11
Control, throttle lever..... 10
Control, transmission..... 16
COOLING SYSTEM..... 78
Cooling system, capacity..... 42
Cooling system, drain and refill..... 79
Cooling system, to clean..... 79
Cowl ventilators, open cars..... 26
Crankcase ventilating system..... 54
Curtain fasteners, open cars..... 30
Curtains, side, open cars..... 27

D

Danger of running engine in closed garage. 20
Data for license purposes.....114
Diagram, chassis lubrication..... 58
Disc wheels, to change..... 40
Distributor oil cup, fill with oil..... 56
Don'ts for general operation..... 22
Door hardware, to oil..... 60
Draining cooling system..... 79
DRIVING..... 20
Driving on steep grades..... 21
Driving speed when car is new..... 20
Driving suggestions..... 22
Duco finished cars, to wash..... 62

E

Effect of alcohol on finish of body..... 42
ELECTRICAL SYSTEM..... 82
ENGINE..... 70
Engine fails to start..... 14
Engine, important features of..... 70
ENGINE LUBRICATION..... 52
Engine number, location of.....114
Engine oil..... 50
Engine oil for cold weather..... 42
Engine oil, to replace..... 55
Engine, prepare for storage..... 66
Engine, starting of..... 13
Engine, starting in cold weather..... 44
EQUIPMENT..... 25
Equipment, tools..... 31
Exide depots for battery maintenance..... 86

F

Fan belt adjustment..... 78
Fasteners, curtain, open cars..... 30
Fiber grease..... 51
Filling and draining cooling system..... 79
Filter for gasoline..... 74
Filter for oil..... 54
Finish of body, care of, when new..... 61
Foot brakes..... 17
FRONT AXLE.....100
Front brake trunnions, to lubricate..... 59
Front wheels, alignment of.....100

G

Gas in closed garage, when engine is running..... 20
Gasoline filter..... 74
Gasoline gauge..... 9
Gasoline strainer, cleaning in cold weather 43
GASOLINE SYSTEM..... 72
Gauge, gasoline quantity..... 9
Gauge, oil pressure..... 14
General driving suggestions..... 22
GENERAL INFORMATION..... 69
GENERAL LUBRICATION..... 57
General operation don'ts..... 22
Generator..... 82
Generator oil cups, fill with oil..... 56
Genuine Cadillac parts.....112
Grease gun connections, to grease..... 57
Grinding valves..... 71

H

Hand brakes..... 18
Hardware on doors, to oil..... 61
Headlamp reflectors, to clean..... 91
Headlamps, adjustment of..... 91
Headlamps, operation use of beams..... 19
Holder for spare tire..... 34

I

Ignition, general description of..... 87
Ignition spark control lever..... 11
Ignition switch..... 9
Ignition timing..... 89
Inflation pressure, tires..... 34
Inspection lamp..... 26
INSTRUMENTS AND CONTROLS..... 9

L

Lamp bulbs..... 91
Level for oil, engine..... 53
Lever, spark control..... 11
Lever, throttle control..... 10
Lever, transmission control..... 16
License data.....114
Lighter, cigar..... 26
Lighting switch..... 19
Lighting system..... 91
Locks..... 9
Lubricant for chassis..... 50
Lubricants..... 50
LUBRICATION AND CARE..... 47
Lubrication chart..... 58
LUBRICATION, ENGINE..... 52
Lubrication schedule..... 48
Lubrication, systematic..... 47

M

Mirror, rear vision..... 26

N

New car, driving speed..... 20
New car, washing..... 61

O

Oil circulating system..... 52
Oil cups on generator, to fill..... 56
Oil cup on timer-distributor..... 56
Oil filter..... 54
Oil for engine..... 50
Oil for engine in cold weather..... 43
Oil level..... 53
Oil pressure..... 53
Oil pressure gauge..... 14
Oil, replacing of, in engine..... 55
Operation, in cold weather..... 41
Operation don'ts..... 22
Operation of starter..... 86
Ordering new parts.....112

P

Parts, genuine Cadillac.....112
Parts, ordering new.....112
Parts, returning of.....113
Pedal, clutch..... 15
Pedal, foot brake..... 17
Pedal, starter..... 12
Position of spark control lever.....11, 44
Position of throttle hand lever.....10, 44
Pressure for tires..... 34
Pressure of oil..... 53
Pressure, oil gauge..... 14
Prices of parts, uniform.....112
Priming the carburetor in cold weather... 44

R

Radiator and shutters..... 78
Rear axle, to add lubricant..... 58
REAR AXLE AND TORSION TUBE... 103
Rear vision mirror..... 26
Removal of wheels.....105
REPAIR PARTS.....112
Replacing engine oil..... 55
Result of underinflation of tires..... 63
Returning parts.....113
Rim, true up..... 37

S

Schedule of lubrication..... 48
Shifting transmission gears..... 16
Shutters on radiator..... 78
Side curtains, open cars..... 27
Small cuts in tires, neglect of..... 64

Solutions for anti-freeze 41
Spark control lever 11
Spark plugs 90
Specific gravity of battery solution 85
SPECIFICATIONS AND LICENSE DATA. 114
Speed of new car 20
Speedometer 18
Speedometer flexible drive shaft, to lubricate 59
Speedometer lubrication notice 50
Speedometer, repairs to 113
Springs, to lubricate 60
Starter pedal 13
Starter, use of in cold weather 45
Starting engine 13
Starting engine in cold weather 44
Starting motor 86
Steering connecting rod 99
STEERING GEAR 98
Steering gear, add lubricant 59
Steering gear, to adjust 98
Strainer in gasoline system 43, 74
Storage battery 84
Storage battery, location on car 84
Storage of tires 67
STORING CAR 66
Suggestions for driving 22
Switch, ignition 9
Switch, lighting 19
SYSTEMATIC LUBRICATION 49

T

Throttle control 10
Throttle hand lever position, cold weather 44
Timer-distributor 87
Timer-distributor oil cup, fill with oil 56
Timing ignition 89
Tire balancing marks 103
Tire holder 34
Tire pressure 34
Tires 33
Tires, care of 63
Tires, to change 37
Tire valve caps 33
Tools 31
Tools (illustration) 32
Torsion tube 103
Transmission control 16
Transmission, description of 95
Transmission, to add lubricant 58
Truing up rim 37
Trunnions, front brake, to lubricate 59

U

Uniform parts prices 112
Upholstery, to clean 62
Use of accelerator before engine is warm... 45
Use of jack in changing tires 36
Use of starter in cold weather 45

V

Vacuum tank 73
Valve caps, tire 33
Valve grinding 71
Valve stems, how lubricated 53
Varnished cars, washing, when new 61
Ventilating system for crankcase 54
Ventilators in cowl, open cars 26

W

Washing Duco finished cars 62
Washing varnished cars 61
Water circulation 78
Water pump 79
Water pump, lubrication of 56
Wheel alignment 100
WHEELS 103
Wheels, pack bearings with grease 59
Wheels, removal of 103
Wheels, to adjust bearings of 105
Windows, to clean 62
Windshield and ventilation 25
Windshield cleaner 26
Wire wheels, to change 39

341—140
5500-4-28

Instruction books
1923- ca. 341-2

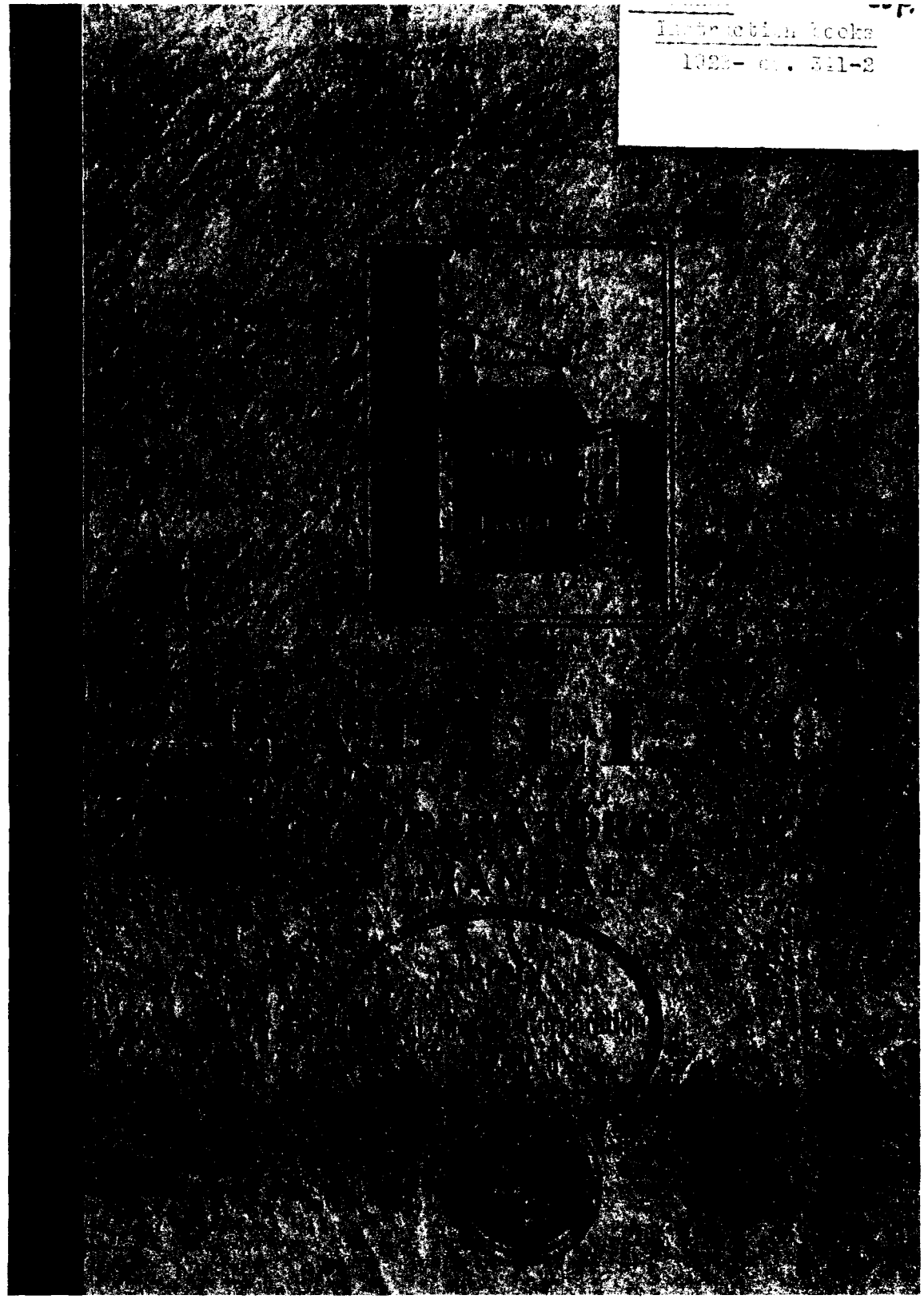

CADILLAC

Operator's Manual



CADILLAC MOTOR CAR COMPANY
DETROIT

Copyright 1928 by
Cadillac Motor Car Company

EDITION NO. 341-2

In ordering a duplicate of this Manual specify the above number or the engine number of the car.

Table of Contents

CHAPTER I—*Cadillac Service* 5

Cadillac-La Salle Service Stations—Service card—Service charges—Repair parts—The owner's obligation—Lubrication—Inspection.

CHAPTER II—*Operation* 9

Locks—Ignition switch lock—Gasoline gauge—Temperature indicator—Throttle control—Ignition control—Carburetor enriching control—Carburetor heat control—Starter pedal—Oil pressure gauge—Clutch pedal—Transmission control—Coasting—Brakes—Speedometer—Ammeter—Lighting switch—Danger of running engine in closed garage.

CHAPTER III—*Equipment* 23

Windshield and ventilation—Windshield cleaner—Adjustable seat—Cigar lighter and inspection lamp—TOP AND SIDE CURTAINS—Top—Side curtains on open cars—Curtain fasteners—TOOLS—Tool compartment—TIRES—Tire valve caps—Inflation pressure—Tire air compressor—Tire carrier—Wire wheel carrier—Disc wheel carrier—Lock for spare tires in fenders—Truing up rim—Use of jack in changing tires—Changing tires—Tire balancing marks.

CHAPTER IV—*Lubrication* 39

Lubrication schedule—Lubrication notice—Lubrication chart—LUBRICANTS—Engine oil—Gear lubricant—Chassis grease—Wheel bearing and cup grease—Fiber grease—ENGINE LUBRICATION—Oil level—Crankcase ventilating system and oil filter—Replacing engine oil—Fan.

CHAPTER V—*Cold Weather Operation* 46

PREPARING FOR COLD WEATHER—Anti-freezing solutions—Capacity of cooling system—Winter lubrication—Storage battery—Gasoline system—STARTING THE ENGINE—Carburetor enriching button—Priming the carburetor—Position of throttle hand lever—Position of spark control lever—Use of starter—Use of accelerator before engine is warm.

CHAPTER VI—*General Care* 51

Storage battery—Cooling system—Gasoline filter—Temporary brake adjustment—BODY—Care of finish—Care of the top—Cleaning upholstery—Door Hardware.

CHAPTER VII—*Storing Car* 56

Engine—Storage battery—Tires—Body and top—Taking car out of storage.

CHAPTER VIII—*Specifications and License Data* 59

CHAPTER I

Cadillac Service

THE owner of a Cadillac car has purchased not simply a fine piece of machinery, ingeniously designed and carefully built—he has purchased a pleasant and dependable mode of transportation. The car itself is only one factor in securing this transportation—the other factor is Cadillac Service, which is built upon *a standard policy, clearly defined to the car owner and guaranteeing him efficient service everywhere at standard prices under factory regulation.*

Cadillac-La Salle Service Stations

Cadillac Service extends wherever Cadillac and La Salle cars are sold. Service stations conducted by Cadillac distributors and dealers are designated as "Authorized Cadillac-La Salle Service Stations" and are identified by the exclusive sign illustrated on the cover of this manual. Wherever this sign is displayed, the owner will find an organization prepared to service Cadillac cars. This means proper equipment, factory trained personnel, a stock of genuine replacement parts and standardized policies and methods.

The car owner's first and most frequent contact with Cadillac Service will naturally be in the service station of the distributor or dealer who sold him the car and who therefore has the greatest interest at stake in assuring his satisfaction. Nevertheless, he may feel perfectly free to use his car for extended travel without depriving himself of the service benefits to which he is entitled at his local service station. He will find other Authorized Cadillac-La Salle Service Stations able and willing to render the same service.

Service Card

As a means of introduction at other Authorized Cadillac-La Salle Service Stations, every purchaser of a Cadillac car is given credentials in the form of a Service Card. This card is mailed to him by the Cadillac factory immediately after the delivery of the car is reported by

the distributor or dealer. It is supplied in a celluloid case, and is intended to be carried in a holder provided on the rear face of the dash.

Upon presentation of this Service Card to any Authorized Cadillac-La Salle Service Station, the car owner is entitled to the following uniform standard service:

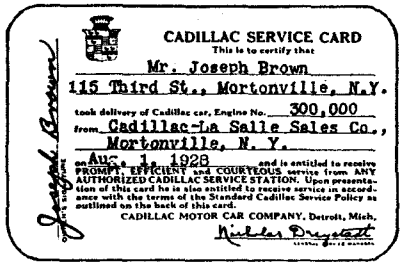
CADILLAC SERVICE CARD
This is to certify that
Mr. Joseph Brown
115 Third St., Mortonville, N.Y.
took delivery of Cadillac car, Engine No. 300,000
from Cadillac-La Salle Sales Co.,
Mortonville, N. Y.
on Aug. 1, 1928 and is entitled to receive PROMPT, EFFICIENT and COURTEOUS service from ANY AUTHORIZED CADILLAC SERVICE STATION. Upon presentation of this card he is also entitled to receive service in accordance with the terms of the Standard Cadillac Service Policy as outlined on the back of this card.
CADILLAC MOTOR CAR COMPANY, Detroit, Mich.
Joseph Brown

Figure 1. The Service Card, when properly signed, identifies a Cadillac owner at any authorized Cadillac-La Salle service station.

1. All adjustments free of all charges that may be required within 90 days after the original delivery date (as shown on the card), provided the mileage of the car does not exceed 3000 and the adjustments are not made necessary by accident, abuse or neglect. This includes everything except lubrication, washing and storing.

2. Free replacement of any part which has proved to the Cadillac Motor Car Company's satisfaction to be defective in material or workmanship within one year after the delivery date, provided the mileage of the car does not exceed 12,000 and that the replacement was not made necessary by accident, abuse or neglect. This includes material and labor.

The Service Card is not transferable, and the no-charge service set forth above is effective only while the car is in the hands of its original owner.

Service Charges

Service work other than that described above is performed by Authorized Cadillac-La Salle Service Stations on a flat-rate basis. When a car enters the service station, it is immediately inspected by a tester, who then quotes the owner an exact price for the work he finds necessary. The owner authorizes the work at this price, and when he receives his bill, this is the price he pays.

Charges prevailing at Authorized Cadillac-La Salle Service Stations are based on standard schedules furnished by the Cadillac Motor Car Company. These schedules call for methods and tools approved by the same engineers who designed and built the car, assuring the highest quality of work at the lowest possible price. Standard Price Schedules are open to inspection by owners at any Authorized Cadillac-La Salle Service Station.

Repair Parts

Genuine Cadillac parts, manufactured to the same rigid specifications as the parts entering into the original assembly of the car, and carried in stock by Authorized Cadillac-La Salle Service Stations. They are sold at uniform prices throughout the United States, and are not subject to the addition of handling, excise or other supplementary charges. Printed price lists, published by the Cadillac Motor Car Company, are open to inspection by owners at any authorized Cadillac distributor's or dealer's establishment.

The Owner's Obligation

All of these service facilities are placed at the disposal of the Cadillac owner, in order that his car may be a continuous source of satisfaction and utility. This result cannot be guaranteed, however, unless the owner fulfills certain definite obligations himself, as follows:

1. To drive the car at moderate speeds for the first 500 miles.

2. To operate the car in accordance with the instructions contained in this manual.

3. To check the engine oil level every 100 to 150 miles, and add oil as often as necessary to keep the indicator at "full."

4. To check the tire pressure at least every week, and keep it up to the recommended pressure—45 pounds in front and 40 pounds in rear—on cars driven at high speeds, 50 pounds in front.

5. To add distilled water to the storage battery every 1000 miles, and in warm weather every 500 miles, or at least every two weeks.

6. To lubricate the car every 1000 miles, in accordance with the lubrication schedule on page 40.

7. To take the car to an Authorized Service Station for inspection every 1000 miles, or at least once a month.

Lubrication

The first five items above are details which do not necessarily warrant a visit to the service station. For lubrication, however, the owner is urged to patronize Authorized Cadillac-La Salle Service Stations, because they are prepared to furnish this service in a manner that cannot be duplicated elsewhere. Only approved lubricants are used, the specifications of which have been worked out by Cadillac engineers to give the

best possible results. Workmen who specialize on Cadillac cars know exactly where lubrication points are located and how much lubricant to apply. The charge for this lubrication service over a period of 4000 miles is barely over half a cent a mile, which includes the cost of the lubricant.

Inspection

Preventive service is a fundamental principle of Cadillac Service. "Preventive service" is the practice of inspecting the car at regular intervals and making those adjustments that need attention before the need becomes an emergency. Inspections should be made every 1000 miles, in order to insure transportation satisfaction. Authorized Cadillac-La Salle Service Stations will make such inspections without charge, provided no dismantling of units is necessary.

The Cadillac owner is urged to take full advantage of this, not only while the car is new, but throughout its entire life.

Preventive service, rendered every 1,000 miles by an Authorized Cadillac-La Salle Service Station is the surest guarantee of long life and complete motoring satisfaction at the least possible expense.

CHAPTER II

Operation

1928 CADILLAC

ONE of the first things the driver of a new car should do is to familiarize himself with the various controls described in the following chapter.

Locks

Each car is equipped with two each of two different keys, one for the combination ignition switch and transmission lock and the door lock; the other for the tire carrier and the package compartments. The ignition key can be identified by its hexagonal end, while the package compartment key is oval.

The lock number is stamped on each key but not upon the face of the lock. The owner should make a record of the key numbers as soon as he takes delivery of his car, so that in the event both keys are lost, a duplicate key can easily be obtained from a Cadillac distributor or dealer.

Ignition Switch Lock

The lock at the lower right-hand side of the instrument panel controls both the ignition switch and the transmission lock. To unlock the car, insert the key and turn to the right. The cylinder of the lock will then slide out about half an inch, turning on the ignition and unlocking the transmission by means of a cable connection to the shifter shafts. To shut off the ignition and lock the transmission, simply push the lock cylinder all the way in. The car can be locked when the transmission is in neutral or in reverse. Do not attempt to shut off the ignition when the transmission is in any forward gear. Be sure to remove the key before leaving the car.

Gasoline Gauge

The gasoline gauge, marked "Fuel," is the lower dial in the center of the instrument panel (Fig. 3). This gauge indicates in gallons the quantity of fuel in the tank at the rear of the car, and is operated electrically. To read from the gauge the quantity of fuel in the tank, the ignition must be switched on.

When the ignition is switched off, the gauge hand may come to rest anywhere on the gauge. It does not usually return to zero, nor does it

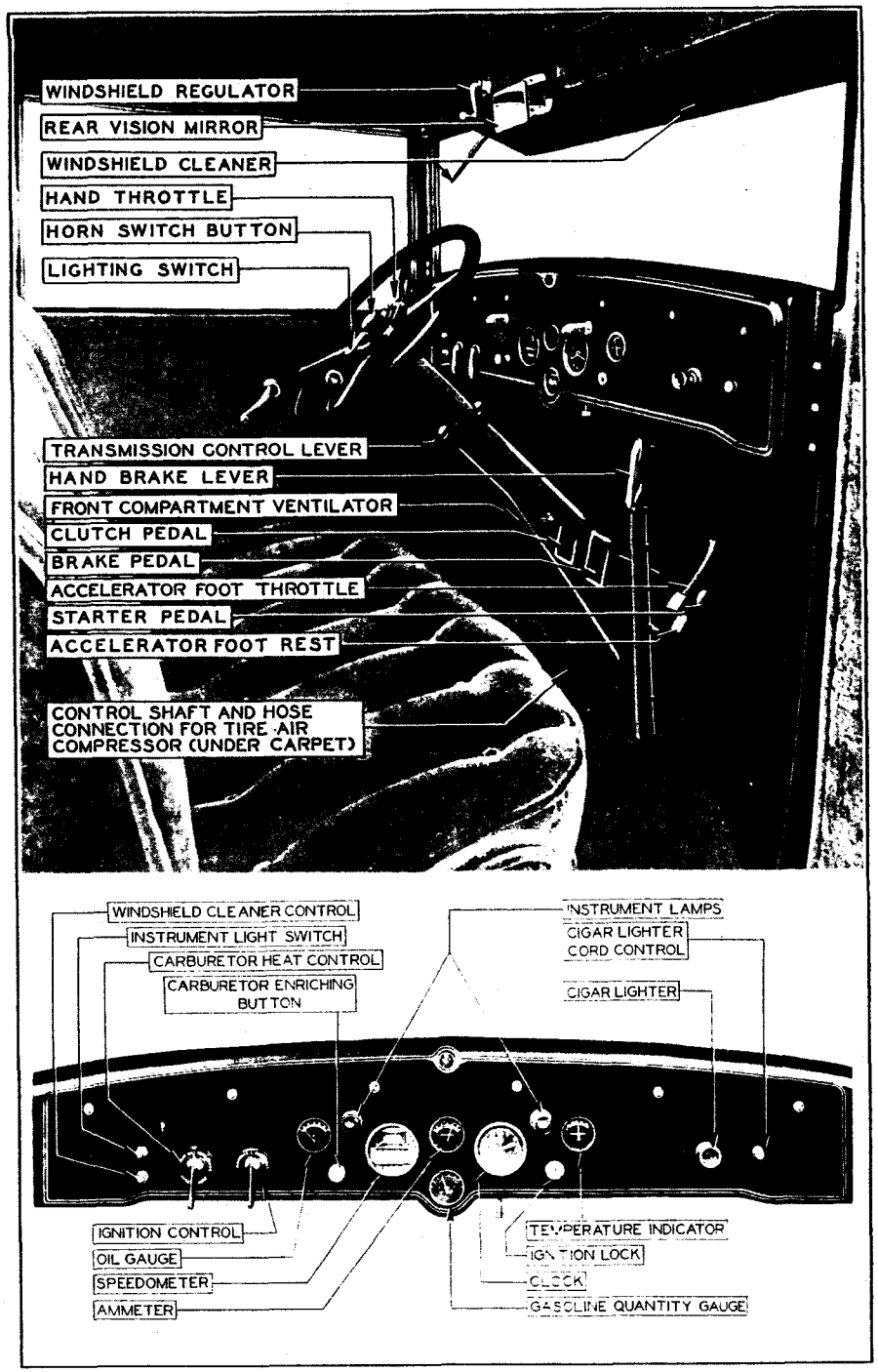

Figure 2. The new driver should familiarize himself with the instruments and controls before attempting to drive.

ordinarily stay in the position it had before the ignition was switched off. At such times, therefore, the reading of the gauge is not a true reading. A true reading is given only when the ignition is switched on.

As filling station rules forbid running the engine while the gasoline tank is being filled, on such occasions the ignition should be switched off until the engine stops and then switched on again, and left on while the tank is being filled.

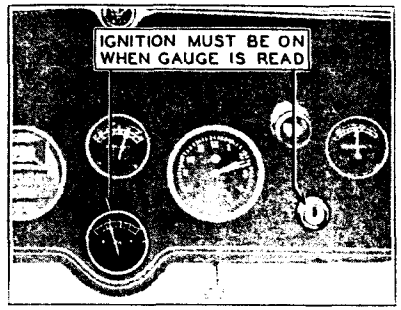

Figure 3. The gasoline gauge is operated electrically by current from the ignition circuit.

If the fuel supply should give out on the road, so that the vacuum tank on the dash becomes empty, it will be necessary after refilling the gasoline tank to prime the vacuum tank. To do this, close the throttle and hold the starter pedal down for 20 to 30 seconds. *The throttle must be closed while this is done.*

Temperature Indicator

The gauge at the extreme right of the instrument panel (Fig. 4) is a thermometer for indicating the temperature of the engine, and takes the place of a temperature indicator on the radiator. The bulb end of the thermometer is inserted in the water jacket at the rear end of the right-hand cylinder head, and is connected by a small tube to the dial on the instrument board.

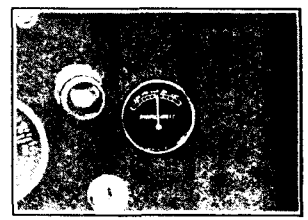

Figure 4. The temperature of the water in the cylinders should range from 160° to 190°.

The normal engine temperature after the engine becomes warm is 160° to 190°.

Throttle Control

The power and speed of the engine are controlled by opening and closing a throttle valve in the carburetor. This throttle is operated both by a hand lever and a foot pedal.

The foot pedal, or accelerator, is at the right of the brake pedal (Fig. 2). The hand control is the upper lever above the steering wheel. Both controls operate the same throttle; the hand lever, however, remains in the

position to which it is moved, whereas the accelerator must be held down to keep the throttle open.

The normal position of the hand lever for driving the car is all the way up (at "Close"). In this position the throttle of the carburetor is open just enough to permit the engine to run at idling speed after it is warm. For starting, however, the lever should be moved approximately one-fourth the way down, and should be left in this position until the engine is warm enough to permit the lever to be returned to the idling position without stalling the engine. (Also see Chapter on "Cold Weather Operation.")

Ignition Control

Correct timing of the ignition in relation to the positions of the pistons is controlled automatically by the timer-distributor which provides for all ordinary advancing and retarding of the spark.

A hand control is also provided, however, for further retarding of the spark as occasion requires. The hand control is the right hand of the two levers on the instrument board directly in front of the steering column. When the pointer is all the way to the left the spark is fully advanced. When the pointer is all the way to the right, the spark is fully retarded.

The correct position of the hand control lever depends on the fuel used. Cadillac cars are equipped with what are known as high compression cylinder heads. These are cylinder heads in which the space into which the fuel mixture is compressed just before it is ignited is so proportioned that a higher pressure is obtained than with low-compression cylinder heads.

High-compression cylinder heads enable the engine to develop more power when used with anti-knock fuel. The ignition is so timed at the factory that when the hand control lever is fully advanced the engine will develop the maximum power possible with anti-knock fuel.

The high-compression cylinder heads do not prevent the use of regular fuel, but when regular fuel is used the spark must be retarded slightly to secure maximum power and prevent detonation or spark knock. The spark should then be retarded just to the point where the engine "pings" slightly on rapid acceleration. This slight amount of spark knock is absolutely harmless to the engine and is an indication to the driver that the spark is set at the point that will give maximum power and economy.

When once set, the spark control does not need to be changed unless the fuel is changed or unless the accumulation of carbon makes it necessary. Carbon deposit, which accumulates with use in all engines, also causes spark knock and in time may require setting back the spark. Regardless of the kind of fuel used or the presence of carbon, the correct setting of the spark control at any time is at the point where the engine "pings" slightly on rapid acceleration.

CAUTION—If the engine is being cranked by hand the spark should always be fully retarded.

Carburetor Enriching Control

The button at the left of the instrument panel (Fig. 5) controls a device on the carburetor for temporarily enriching the fuel mixture supplied to the engine. When starting the engine, it is necessary to have the proportion of liquid gasoline in the fuel mixture greater than at other times, because in a cold mixture only a part of the gasoline is vaporized. Pulling out the enriching button increases the proportion of liquid gasoline to air, the normal proportions being restored when the button is released and permitted to return to its original position.

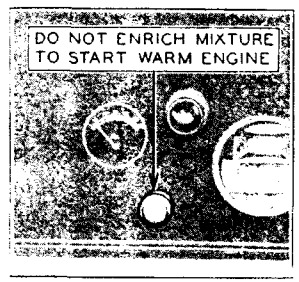

Figure 5. The carburetor enriching control does not prime the carburetor. To have any effect, it must be held out while the starter is cranking the engine.

Correct use of the enriching control not only is essential to quick starting of the engine, but also has an important effect on the life of the engine. The enriching button must be pulled out far enough in starting to provide an explosive mixture quickly so that the battery is not unnecessarily discharged by useless cranking. The button must also be held out far enough during the warming-up period so that the engine will run without missing and "popping back."

On the other hand, it should not be pulled out any further or held out any longer than is necessary to accomplish these results, because some of the excess liquid gasoline in the enriched mixture does not burn and washes off the oil on the cylinder walls, interfering with proper lubrication of the pistons.

If the engine still retains heat from previous running, the enriching control should not be used without first attempting to start the engine on the normal mixture. If the enriching button is pulled out for starting a hot engine, the mixture may be made so rich that starting will be impossible.

The enriching button is not a priming device. It has no effect whatever on the fuel or the fuel mixture unless the engine is being cranked or is running under its own power. To have any effect, the button must be pulled out and held partly out during the cranking operation.

Carburetor Heat Control

The lever marked "Carb. Heat" on the instrument board, directly in front of the steering column, controls the flow of exhaust gases through the jacket of the intake header which conducts the fuel mixture from the carburetor to the cylinders. This lever operates a valve at the front end of the left-hand exhaust manifold.

The lever should be turned to the "Heat On" position when starting the engine, and should be carried in this position for average driving. For continuous driving at high speeds, the lever should be turned to "Heat Off." This is important, for the maximum power of the engine cannot be obtained with the valve in the exhaust manifold closed.

Starter Pedal

The starter pedal is at the right of the accelerator (Fig. 2). Pushing this pedal forward brings into action the electric motor that cranks the engine for starting. Do not push the starter pedal when the engine is running.

The starter pedal is only one of the controls that must be manipulated to start the engine. Unless there is an explosive mixture in the cylinders and a spark to ignite it, it is useless to crank the engine. The starter pedal should not be operated, therefore, until the necessary preliminary steps have been taken. The following, in their proper order, are the various steps that must be performed to start the engine.

1. Make sure that the transmission control lever is in neutral.
2. Place the throttle lever about one-fourth the way down from the idling position.
3. See that the carburetor heat control lever is all the way toward "Heat On."
4. Switch on the ignition.
5. Unless the engine is still warm, pull back the carburetor enriching button and hold it back. If the engine is still warm, do not pull back the enriching button unless the engine fails to start on the normal mixture.
6. Push the starter pedal forward and hold it until the engine starts. Release it immediately as soon as the engine starts. (See below for probable causes for the engine failing to start.)
7. Let the carburetor enriching button partly in as soon as the engine starts, and all the way in as soon as the engine is warm enough to permit it.
8. Note whether pressure is indicated on the oil pressure gauge and stop the engine at once if no pressure is indicated.
9. Move the throttle lever up to the idling position as soon as the engine is warm enough to permit it.

In cold weather, disengage the clutch before pressing down the starter pedal, and hold it down during the cranking operation. This relieves the starter of the necessity of turning the transmission gears which are immersed in lubricant. The additional load is small in warm weather when the lubricant is thin, but in cold weather the power required to turn the gears through the thickened lubricant adds unnecessarily to the demand upon the battery.

What To Do If the Engine Fails to Start

If the engine fails to start after being cranked for a few seconds, release the starter pedal and investigate the following possible causes:

The ignition may be switched off.

There may be no gasoline in the tank in the rear of the car.

There may be no gasoline in the vacuum tank on the dash. If the vacuum tank should be empty, prime it by closing the throttle, and with the ignition switched off, holding the starter pedal down for 20 to 30 seconds. The throttle must be closed while this is done. Then open the throttle, switch on the ignition, and try again to start the engine in the usual manner.

The carburetor may be flooded by unnecessary use of the enriching device when the engine is warm. To get rid of this surplus gasoline in the carburetor, open the throttle wide, and, with the ignition switched off, hold the starter pedal down for 10 to 15 seconds. Then return the throttle lever to the usual position for starting, switch on the ignition and try again to start the engine.

Oil Pressure Gauge

The small dial at the left-hand end of the instrument panel (Fig. 6) is the oil pressure gauge. This gauge does not indicate the quantity of oil in the engine. It indicates only the pressure under which the oil is forced to the engine bearings.

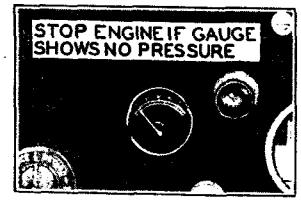

Figure 6. The oil pressure gauge does not show how much oil is in the engine—it shows pressure only. The pressure when the engine is idling should be 7 to 10 pounds.

When the engine is not running, the pointer on the oil pressure gauge should remain at zero, but as soon as the engine is started and as long as it runs, the gauge should show pressure. If the gauge does not show pressure when the engine is running, stop the engine at once and determine the cause. Serious damage may be done if the engine is run without oil pressure.

The amount of pressure indicated by the gauge depends upon the speed of the engine and the viscosity of the oil. At idling speed with fresh oil of the correct viscosity, the oil pressure after the engine is warm should be 7 to 10 lbs. Before the engine is warm, the pressure will be higher. After the oil has become thin the pressure will be lower. These are normal variations from the standard and do not indicate need for attention.

Clutch Pedal

The clutch pedal is the left-hand pedal. When this pedal is in its normal or released position, the clutch is engaged. The flywheel of the engine is then coupled to the transmission. When the clutch pedal is pushed down, the clutch is disengaged, and the flywheel, if the engine is running, revolves independently of the transmission.

The clutch has two uses: First, to enable the car to be started gradually and without jerk or jar; second, to permit shifting of the transmission gears. The operation of the clutch pedal is discussed below in connection with the transmission control. Further comment is unnecessary at this point, except the following suggestions to the driver:

Do not drive with the foot resting on the clutch pedal. The Cadillac clutch operates so easily that even the weight of the driver's foot may unintentionally cause the clutch to slip.

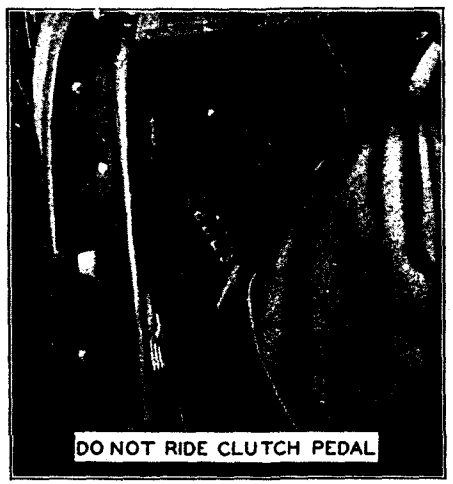

Figure 7. A good driver uses the clutch pedal only when shifting gears or about to stop.

Do not form the practice of disengaging the clutch whenever the brakes are applied. Most occasions for use of the brakes require only slowing down without stopping or even shifting gears. A skilled driver will not touch the clutch pedal until the car is just about to stop or until he is about to shift to a lower gear. It is a mistaken idea that applying the brakes with the clutch engaged is more severe on the brake lining. The opposite is actually the case, proof of which is in the fact that in coasting down grades, the resistance of the engine is used to assist the brakes in controlling the car speed.

It will be observed in operating the clutch pedal that the pedal offers almost no resistance until it has been moved about one inch. It is at this point that it actually begins to disengage the clutch. It is important that the pedal have this "lost motion." If the full pressure of the clutch springs is felt just as soon as the pedal is moved, the control rod should be readjusted. Failure to make this adjustment will result in the clutch slipping.

Transmission Control

The operation of the Cadillac Syncro-mesh transmission is, in general, the same as the operation of the conventional selective sliding-gear type of transmission. The positions of the control lever for the various speed combinations are the same and the directions in which the control lever is moved are the same. It is also necessary to disengage the clutch before moving the control lever, the same as with the conventional transmission.

The only difference is in the manner of moving the control lever. With the conventional transmission, it is customary when shifting to a higher gear to hesitate momentarily in neutral and then move the lever quickly to its new position.

With the Cadillac Syncro-mesh transmission there is no necessity either for the hesitation in neutral or for the rapid movement of the lever during the latter part of the shift. Instead, the movement of the control lever should be one smooth, continuous movement.

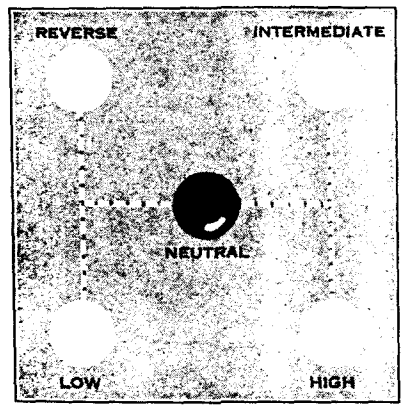

Figure 8. The positions of the control lever are the same as for the conventional type of transmission.

Without giving a detailed explanation of the synchronizing mechanism, it may be said that its purpose is to secure noiseless shifting of the control mechanism by automatically synchronizing (or equalizing) the speeds of the two members which are to be coupled together, before the shift is made.

This synchronizing effect is brought about by a pair of friction clutches of simple cone-type, which are actuated by the control lever through a cam mechanism. As the control lever leaves the neutral position, it engages one or the other of these clutches just long enough to synchronize the two members, so that when the final movement of the control lever

is made, the teeth which interlock to take the drive are traveling at exactly the same rate of speed.

The synchronizing principle applies to all shifts into intermediate or high; in other words, to the following shifts:

Low to intermediate
Intermediate to high
High to Intermediate

There is no synchronizing mechanism for low or reverse gears because shifts into these gears are usually made when the car is standing still. When shifting from neutral to low or reverse, therefore, it may be necessary to await an instant after disengaging the clutch, to give the gears a chance to stop "spinning." Do not attempt to shift from intermediate to low unless the car is standing still or moving very slowly.

If, when descending a grade at high-speed, it becomes desirable to shift from high to intermediate, in order to use the engine as a brake, re-engage the clutch slowly after making the shift. This will bring the engine up to speed gradually and avoid the sudden load that would otherwise be imposed upon the clutch.

The ease and certainty with which a noiseless shift can be made with the new transmission, may tempt some drivers to perform "stunts" for which it is not intended. The synchronizing principle makes it possible for the driver to make use of intermediate speed at any time that it is an advantage to do so, without having to worry whether he will get "into gear" successfully. There is no advantage to be gained, however, in using intermediate at speeds above 30 miles per hour, and any attempt to shift at higher speeds should be regarded as abuse.

Coasting

To coast on the level, simply release the accelerator pedal and disengage the clutch. If coasting to a stop, the transmission control may also be shifted to neutral and the clutch re-engaged.

In coasting down grades, however, it is recommended that the transmission be left in gear and the clutch engaged. With the throttle in the idling position, the car is thus made to drive the engine, the resistance of which assists the brakes and saves wear on the brake lining. It must be remembered that the brakes are subjected to much more severe use on grades than on the level, because gravity acts continuously, whereas on the level, the brakes need absorb only the momentum of the car. Even on slight grades, coasting with the transmission in neutral or the clutch disengaged is not

advisable. On any grade steep enough to warrant coasting, it is worth while to save the brakes as much as possible by utilizing the braking effect of the engine.

Ordinarily, the resistance offered by the engine when the transmission is in high is sufficient to control the speed of the car, supplemented by moderate use of the brakes. On steep grades, however, the transmission control should be shifted to intermediate.

Do not switch off the ignition when coasting with the car driving the engine. Contrary to a common impression, this does not appreciably increase the resistance, and is likely to cause damage to the engine. Even with the throttle closed, some fuel is admitted to the cylinders, and if this is not burned, it condenses on the cylinder walls and washes off the oil by which the pistons are lubricated.

Brakes

The foot brakes, operated by the right-hand pedal, are internal brakes of the shoe type, applied on all four wheels through a mechanical linkage.

The front wheel brakes are designed so that, if applied while the steering wheel is turned to the right or left, only the brake on the inside wheel is effective and the brake on the outer wheel is released, leaving it free to rotate. It is thus impossible to lock both front wheels, even on slippery pavement, unless the car is moving straight ahead.

Gradual application of the brakes will provide sufficient stopping power and will result in less strain on the mechanism, so the brakes should not be applied suddenly except in an emergency. This is particularly true in crowded traffic, for a vehicle following may not have such efficient brakes.

When applying the brakes on wet asphalt streets or slippery roads, do not disengage the clutch until the car is almost stopped. Do not attempt sudden stops. Cadillac four-wheel brakes minimize the possibility of skidding under these conditions, but their effectiveness should not induce anyone to drive less carefully.

As the brake lining wears, the pedal must be pushed farther down to apply the brakes. Do not wait until the pedal goes all the way to the floor board before having the brakes readjusted. Readjustment is recommended as soon as the pedal must be pushed down to within one inch of the floor board. A temporary adjustment of the foot brakes is explained on page 53.

The hand brakes, which consist of separate internal brake shoes on the rear wheels, are operated by the hand lever at the right of the transmission control lever.

Speedometer

The lower dial of the speedometer, which is for recording "trip" mileage, can be reset to zero by pushing up and turning the knurled stem back of the instrument board.

Across the speedometer cove· glass and below the total mileage dial is a strip of black celluloid on which are two white spaces. These spaces are for the lubrication notice described on page 39 in connection with the lubrication schedule. Use this notice in accordance with the schedule.

An automobile repairman should never be permitted to attempt to adjust or repair the speedometer head or to replace the glass. This work can be done only by men experienced in speedometer work and only with special machinery and tools. If the speedometer head is removed, handle it as carefully as a fine watch. The speedometer head may easily be damaged by rough handling.

Ammeter

The upper dial on the instrument panel (Fig. 9) is the ammeter, which measures the electric current flowing to or from the battery at all times, except when the starter is cranking the engine. When current is flowing from the battery, the ammeter shows a reading on the side marked "Discharge;" when current is flowing to the battery, the ammeter is on the "Charge" side.

The ammeter should indicate on the "Charge" side most of the time. Otherwise, more current will be taken out of the battery than is put into it and the battery will eventually become fully discharged. When the engine is not running, the ammeter will indicate a current on the discharge side, depending in amount upon the number of lights in use. The rate of charge or discharge when the engine is running depends upon the speed of the engine and the number of lights in use, and is equal in amount to the difference between the current generated and the current used by the lights, horn, ignition and other electrical devices.

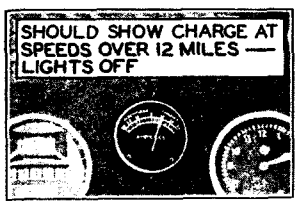

Figure 9. The ammeter indicates the amount of electrical current flowing to or from the battery.

Ordinarily, when no lights are in use, the ammeter should show "Charge" as soon as the car is running ten or twelve miles per hour in high gear. If the ammeter should show "Discharge" with all lights off, either when the engine is not running or when the car is running more than twelve miles per hour, the cause should be investigated.

Lighting Switch

The lighting switch control is at the upper end of the steering column in the center of the steering wheel. The lever has three positions besides "Off." These positions are marked respectively: "Parking," "Down," and "Up." The corresponding combinations of lights are as follows:

Parking—Parking lights (dim), and rear lamp.

Down—Headlamp lower beams (bright), and rear lamp.

Up—Headlamp upper beams (bright), and rear lamp.

The headlamp bulbs have two filaments, one above the other, instead of the customary single filament. Both filaments are of the same candlepower (21), but because they are located in different positions with respect to the reflector, the beam of light from one filament is projected at a different angle from the other. When the switch lever is at "Up," one set of filaments is lighted and the beams are projected straight ahead, illuminating the road at a distance. When the lever is at "Down," the other filaments are lighted and the beams are projected down at an angle, illuminating more brightly the road directly in front of the car.

The practice to be followed by the driver in using this double-beam feature of the headlamps will depend upon local regulations. In general, it is expected that the upper beams will be used except on the following occasions: When passing a vehicle approaching from the opposite direction, when rounding a sharp curve and when topping the crest of a hill. On these occasions, and at other times when illumination is desired directly in front of the car, the lower beams should be used.

The instrument lamps are controlled by a separate switch at the left-hand end of the instrument board.

Danger of Running Engine in Closed Garage

Every person having to do with the operation or care of a motor car should be warned of the danger that attends running the engine while the car is in a small closed garage.

Carbon monoxide, a deadly poisonous gas, is present in the exhaust of all internal combustion engines. Most people are already familiar with carbon monoxide in the form of illuminating gas, or in the gas produced by furnaces and stoves when insufficient air is supplied to give complete combustion. But illuminating gas and coal gas have unpleasant odor, which serves as a warning, whereas carbon monoxide, as produced in the internal combustion engine, is colorless, tasteless, and almost odorless, so

that the victim may be overcome before he is aware of the danger. When the engine exhausts into the open air, the carbon monoxide is so diluted that it has no effect. It is when the engine is run for a time in a closed room that the proportion of carbon monoxide in the air may increase to the point at which continued breathing of it would be fatal. The United States Public Health Service advises that the average automobile engine warming up in a single-car garage will give off enough carbon monoxide in three minutes to endanger life.

Proper precaution must be taken in cold weather when the natural tendency is to keep the garage doors and windows closed. The practice of letting the engine warm up in a closed garage before opening the doors is unsafe. The risk is made greater by the fact that the enriching of the mixture by manipulation of the carburetor enriching device increases the amount of carbon monoxide formed.

CHAPTER III

EQUIPMENT

THE controls and instruments used in driving have already been described. In addition to these, the car is equipped with various devices which are for the convenience and comfort of the occupants, and are used only as occasion demands. It is suggested that the driver anticipate his use of such equipment by becoming familiar at once with the directions contained in this chapter.

Windshield and Ventilation

CLOSED CARS—Cadillac closed cars are equipped with a one-piece windshield, which can be moved up and down. Movement of the glass is controlled by a handle above the windshield. To raise the glass, the handle should be turned clockwise, and to lower the glass, the handle should be turned counter-clockwise.

For ventilation under the cowl, the windshield should be raised not more than one inch, so that the lower edge of the glass is still below the ledge over the instrument board. With the windshield in this position, air is deflected into the driving compartment through an opening in the cowl, just forward of the instrument board. If desired, the windshield can be raised above the level of the ledge over the instrument board, and air will then enter directly into the car. In this position, however, less air will be forced down under the cowl. (Fig. 10.)

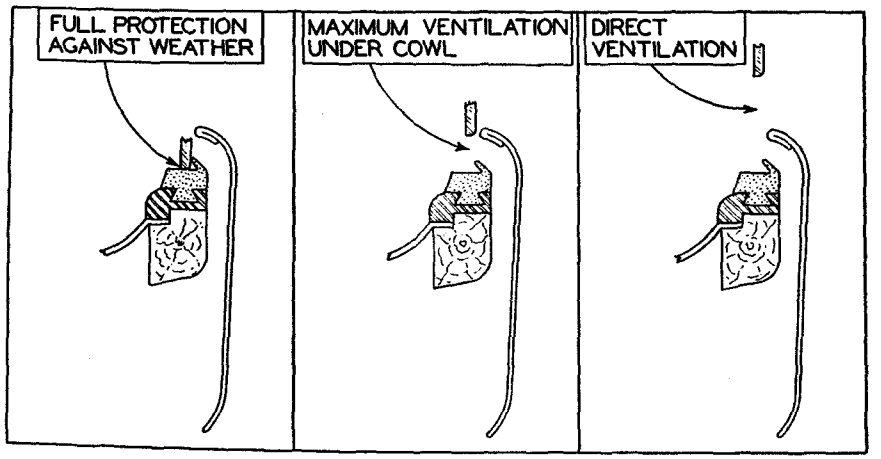

Figure 10. The closed car windshield has three positions: the position shown in the center is best for warm weather.

Cowl ventilators are also provided on the closed cars to supplement the ventilation provided by the windshield. These ventilators are at the sides of the cowl compartment and open toward the rear, serving as outlets for the air entering under the windshield.

OPEN CARS—Cadillac open cars are equipped with two cowl ventilators which are operated by levers just in front of the instrument board.

The open car windshield is in one section, which is pivoted at both the upper and the lower corners. To fold the windshield outward, loosen the wing nuts and tighten them again after the windshield is in the desired position.

Windshield Cleaner

The windshield cleaner consists of two wiper blades driven by an electric motor. The cleaner is controlled by the switch button at the extreme left-hand end of the instrument board. To start the cleaner, pull out the switch button.

Adjustable Seat

The driver's seat is adjustable on all Cadillac cars, except those that are intended to be chauffeur-driven. On open cars, the back of the seat can be moved forward or backward as desired. This adjustment is controlled by the handle on the top of the back of the seat. To move the seat forward, turn the handle clockwise; to move it backward, turn the handle counter-clockwise.

On closed cars, the entire front seat can be moved forward or backward. This adjustment is controlled by a handle on the center of the seat, about three inches above the floorboards. To move the seat forward, turn the handle clockwise; to move it backward, counter-clockwise. The handle must be turned one-half turn at a time.

As the front seat on the five-passenger coupe is divided, only the driver's half of the seat is adjustable. The handle for making the adjustment is on the side of the seat, otherwise the adjustment is the same.

Cigar Lighter and Inspection Lamp

The car is equipped with a combination cigar lighter and inspection lamp that makes use of a single reel with twelve feet of flexible cord attached to the back of the instrument board. The flexible cord ends in a bayonet type socket, to which may be attached either the inspection lamp or the heating element of the cigar lighter. The method of attachment is identical with that of an ordinary lamp bulb. Ordinarily the cigar lighter

will be carried in place in the socket on the cord and the inspection lamp in a stationary socket provided on the front of dash, where it is useful to illuminate the engine. (The inspection lamp is packed with the tool equipment when the car is shipped.)

To use the cigar lighter, pull it out from the instrument board at least a foot, wait a few seconds for the heating element to heat and apply it to the cigar or cigarette. The current is automatically switched on as soon as ten or twelve inches of the cord have been unreeled. To light a pipe, remove the nickel-plated shield by turning it slightly counter-clockwise and pulling it straight off.

To lock the cord in any desired position, pull out the button on the instrument board at the right of the cigar lighter (Fig. 2). This engages a ratchet which prevents the reel from rewinding. To rewind the cord, press the button back to its original position.

The inspection lamp socket on the dash has a double bayonet lock with two sets of slots. To install the lamp, simply insert it in the socket, press in, and turn it clockwise as soon as the pins on the lamp engage the first or outer sets of slots. In this position, the current is not switched on. To switch the current on, turn the lamp slightly counter-clockwise, press in, and turn it clockwise again, engaging the pins in the second or inner set of slots. To switch off the light, turn the lamp counter-clockwise and pull it out of the socket far enough to engage the first set of slots.

Top and Side Curtains

Top

Illustrated directions for folding and raising the top on open cars are given in Fig. 11.

Side Curtains on Open Cars

The side curtains, with which the open cars are equipped, are carried in an envelope provided with cloth partitions to prevent rubbing and chafing. The side curtains on the touring car are stowed under the front seat. On the phaeton and roadster, they are stowed in a special compartment back of the front seat.

The touring car and phaeton curtains are in six sections, each of which is marked to indicate its position, as "Left Front," "Right Center." The front and center sections on both sides are each provided with a rod, the lower end of which fits in a socket in the top of the door. When a curtain

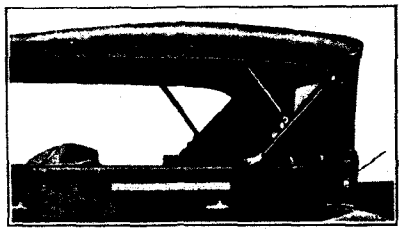

Figure 11a. Remove the caps indicated by the arrow.

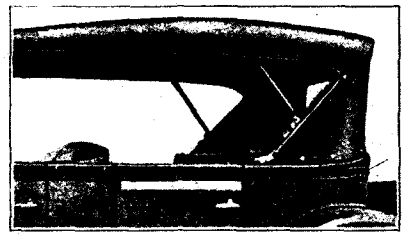

Figure 11b. Install the top supports by pushing them into the sockets and tightening the small cap screws. The supports appear like this when properly in place.

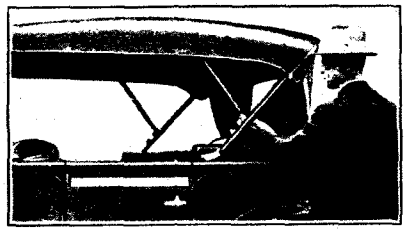

Figure 11c. Detach the side quarter curtains from the bow sockets and fold the curtains back against the rear curtain.

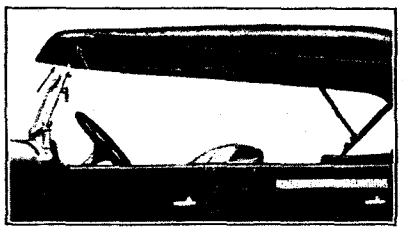

Figure 11d. Unscrew the thumb screws over the windshield supports and push the top up so that the clamps are free from the supports.

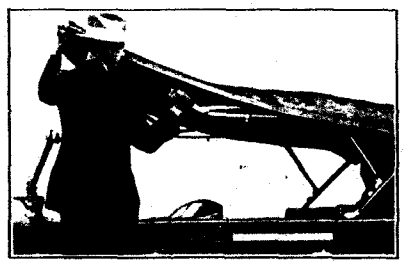

Figure 11e. Stand on the running board and pull down on the front bow socket just ahead of the joint, at the same time pushing the front part toward the rear.

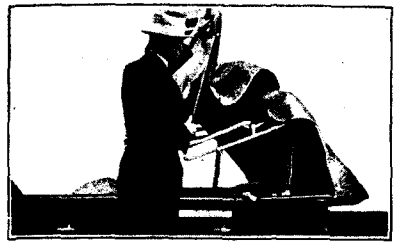

Figure 11f. Fold the top back, allowing the upper fabric or deck to fall back clear of the bows.

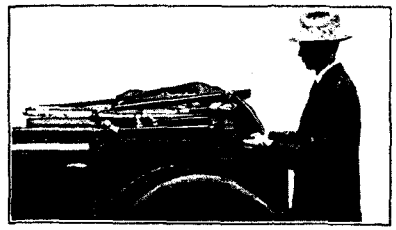

Figure 11g. Tuck the deck down under the bows, carefully smoothing out the material between the bows.

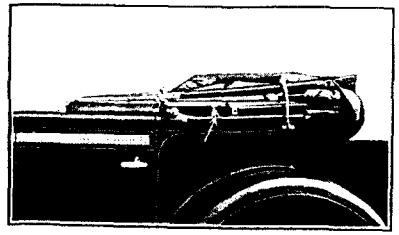

Figure 11h. Make sure that the hooks (see arrow) engage the slotted brackets on the rear bow sockets. Fasten the bows down to the supports with the clamps as illustrated.

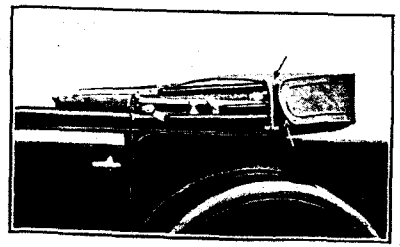

Figure 11i. Draw the dust boot over the folded top. It is secured by four straps (see arrows) at the open corners. These straps should be fastened around the bows and pulled tight to keep the boot smooth. The boot should look like this when properly strapped in place.

To raise the top, remove the dust boot and unfasten the support clamps. Then stand in the tonneau and lift up the front bow. Pull the top up and over, making sure that the joints in the front bow close on both sides. The front end of the top will then be directly over the windshield as in Fig. 11d. Attach the clamps to the windshield supports and tighten the thumb screws. Re-fasten the side quarter curtains to the rear bow sockets.

Figure 11. Folding and Raising Top.

is folded for stowing, this rod is parallel with the bottom of the curtain, as shown in Fig. 12. Before the curtain can be attached to the door, the rod must be moved to the position shown by the dotted lines. The upper end of the rod is slotted to engage with the stiffener that runs along the upper edge of the curtain.

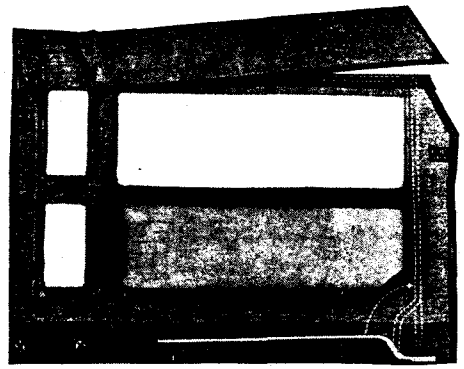

Figure 12. Side Curtain.

The folding flap on the door curtains has the upper rear corner cut off diagonally. This is to permit its being tucked through on the outside when the flap is closed. By tucking the flap this way, the wind is prevented from blowing in at the rear of the flap.

The rear sections should be applied first, followed by the center and front sections. The rear sections should be fastened to the rear bows under the side flaps of the permanent rear curtains.

Before stowing the curtains, they should be dry and clean.

Curtain Fasteners

The curtain fasteners used on the top and side curtains are of three different types. The type used on the side curtains at the points where they fasten to the body is illustrated in Fig. 13b. To release this type of fastener, press in on the small plunger or button in the center of the fastener.



Figure 13. Three types of fasteners are used on the top and side curtains. The way to unfasten each is shown above.

At other points, the fastener as illustrated in Fig. 13a is used. When this type of fastener is snapped on its stud, it becomes locked on three sides. To release this type of fastener, it must be lifted on the side that is not locked. This side is indicated by the small projection to which the arrow points in Fig. 13a. This type of fastener cannot be released by lifting it at any other side.

The remainder of the fasteners used on the top and side curtains are of the usual glove type. (Fig. 13c.)

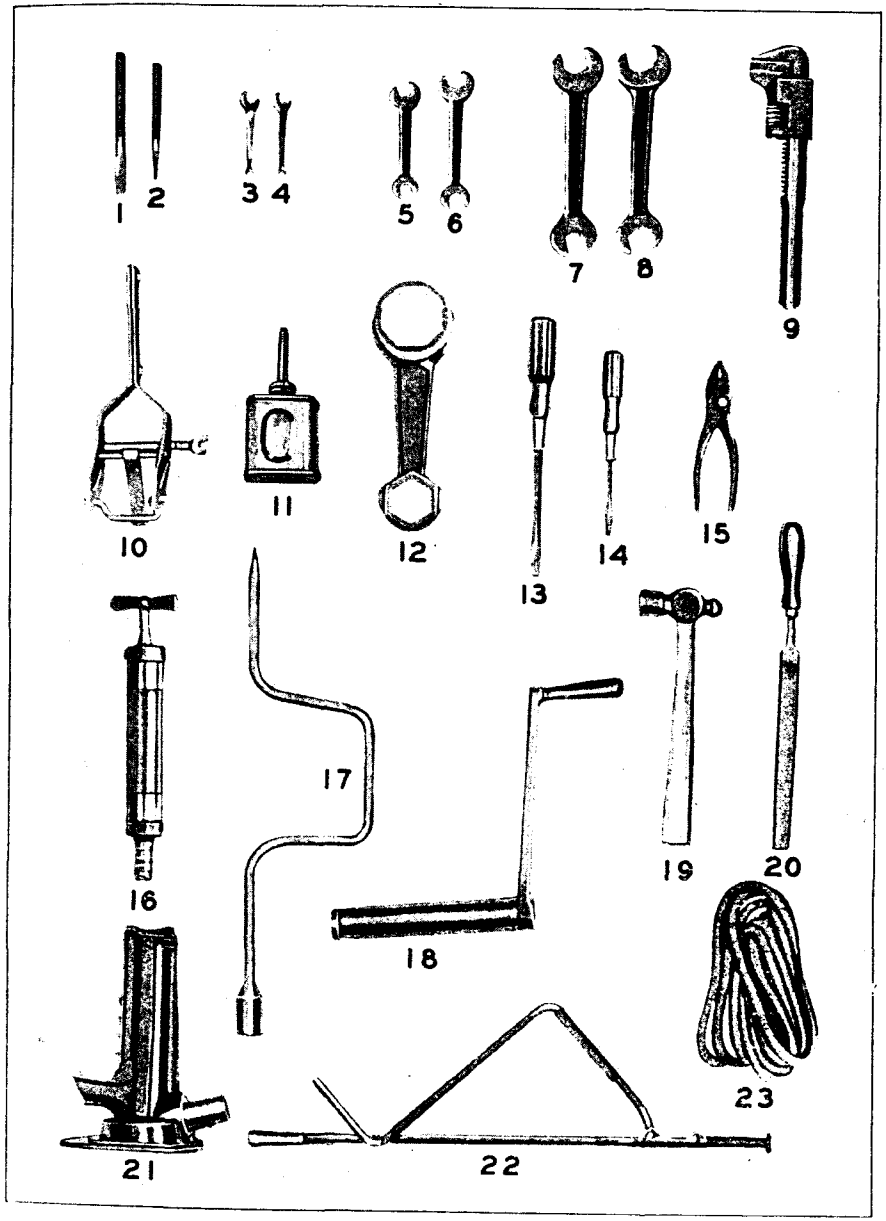

Figure 14. The standard tool equipment. See page 30 for the name and use of each tool.

Tools

The tools comprising the standard equipment are listed below and are illustrated in Fig. 14. Items listed opposite Nos. 24, 25, 26 and 27, are not illustrated.

1. Cold chisel
2. Center punch
3. Distributor wrench (with gauge for adjusting timer contact points and spark plugs).
4. Distributor wrench (plain)
5. Open end wrench $\frac{7}{16}$-$\frac{1}{2}$
6. Open end wrench $\frac{9}{16}$-$\frac{5}{8}$
7. Open end wrench $\frac{3}{4}$-$\frac{15}{16}$
8. Open end wrench $\frac{7}{8}$-$1\frac{1}{8}$
9. Monkey wrench
10. Rim Tool
11. Oil can
12. Hub cap wrench
13. Large screw-driver
14. Small screw-driver
15. Pliers
16. Grease gun
17. Wrench for rim clamping nuts
18. Hand starting crank
19. Hammer
20. File
21. Jack
22. Jack handle
23. Hose for tire air compressor
24. Inspection lamp. Note: The inspection lamp is packed with the tool equipment when the car is shipped but is ordinarily carried in the socket provided for it on the dash.
25. Tool bag
26. Lubrication chart
27. Operator's Manual

Tool Compartment

The compartment for the tool equipment is between the left-hand running board and the frame, and is accessible upon opening a door in the left-hand dust shield. The lock on the tool box door is operated by the key for the spare tire and package compartments, not by the ignition key.



Figure 15a. The tool box door can be unlocked with the package compartment key.

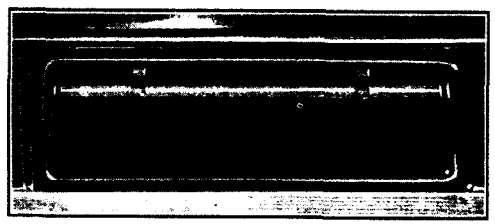

Figure 15b. A retaining rod holds the inner cover of the tool box in place.

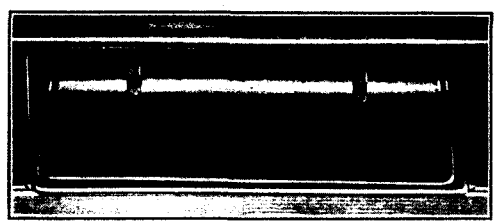

Figure 15c. The inner cover can be removed after the retaining rod is dropped down.

To reach the tools, proceed as follows: Insert the key and turn it clockwise until the lock barrel springs out. The handle can then be turned until the catches are released, permitting the door to be tilted out at the bottom and lifted out clear of the dust shield.

The tools are contained in an inner box, which is held in place by the rod shown in Fig. 15b. Force this rod out of the depressions in the handles on the cover of the box, and let the rod drop to the position shown in Fig. 15c. The cover of the box can then be removed by means of the two handles.

The door of the battery compartment operates in the same manner as the tool compartment.

Tires

Tire Valve Caps

The valve caps used with some makes of tires are a combination dust and valve cap. This type of cap can be removed and installed without screwing the cap the entire length of the threads on the valve stem.

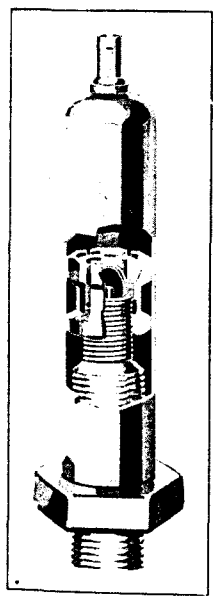

Figure 16. Tire valve cap.

To remove one of these valve caps, turn it two or three turns counterclockwise. This loosens the sliding nut inside the cap. (Fig. 16.) Next, pull the cap up as far as it will go. Then remove the cap by unscrewing it the rest of the way.

To install a valve cap, place the cap over the valve stem and turn it a few turns clockwise to engage the threads in the sliding nut. If the sliding nut is too far inside the cap to be reached by the valve stem, shake the nut down by tapping the bottom of the cap on some solid object. When the valve stem has been started in the sliding nut, push the cap down over the stem as far as it will go. Then turn the cap until it locks tightly.

Inflation Pressure

For normal driving, the front tires should be inflated to a pressure of 45 lbs. and the rear tires to 40 lbs. The inflation pressure should be checked at least weekly, and should never be permitted to drop more than 5 lbs.

On cars driven at high speeds, the front tires should be inflated to 50 lbs. This is important.

Tire Air Compressor

To use the tire air compressor with which the car is equipped, proceed as follows:

Turn back the left-hand side of the front carpet and lift the small oval-shaped cover which is in the floor, just to the left of the transmission control lever. Reach through the hole in the floor and remove the knurled cap from the connection on top of the compressor. Connect one end of the air hose (in the tool equipment) to this connection and at the other end of the hose to the valve of the tire to be inflated. Do not connect the hose to the tire first, if there is pressure in the tire.

The control shaft, by which the compressor driving gear is placed in mesh with the transmission gears, projects through a small hole in the floor, just in front of the large hole over the compressor. To start the compressor, if the engine is running, disengage the clutch and hold the pedal down until the transmission gears have ceased to revolve. Then, with a screw-driver, turn the slotted head of the compressor control shaft clockwise. If the engine is not running, simply turn the control shaft clockwise, without disengaging the clutch and then start the engine.

The compressor gives best results when the engine runs at a speed of approximately 1000 r.p.m., which is about three times the normal speed of the engine when idling. Do not race the engine in operating the compressor, or, for that matter, at any other time when it is not driving the car. Racing the engine beyond the recommended speed not only decreases the efficiency of the compressor, but is one of the worst forms of abuse. To stop the compressor, turn the control shaft counter-clockwise.

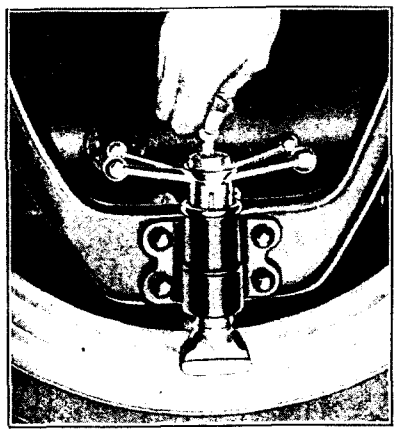

Figure 17. The spare rim and tire can be removed after unlocking the clamp and unscrewing it.

Do not turn the compressor control shaft to start the compressor when the engine is running and the clutch is engaged.

Tire Carrier

The tire carrier is designed to carry either one or two standard-size tires mounted on rims and inflated. Each

rim has on it three lugs, which are located so as to engage with notches on the support arms and on the adjustable clamps. There are two sets of these notches in the support arms.

When two rims are carried, the rim nearest the car should be placed so that the side with the lugs is away from the car, and the lugs should be inserted in the inner set of notches. The outer rim should then be placed so that the side with the lugs faces toward the car and the lugs of this rim should be inserted in the outer set of notches.

When only one rim is carried, the side of the rim with the lugs should face away from the car, and the lugs should be inserted in the outer set of notches. This permits the rim to be clamped by the outer clamp.

The lock is in the upper end of the outer clamp screw and is protected by a dust cap, which must be unscrewed to insert the key. Turning the key clockwise disengages the lock, permitting the clamp screw to be turned.

To lock the outer clamp, screw the clamp down firmly against the rim or rims. Adjust the clamp screw handle so that it points squarely across the car. Then turn the key counter-clockwise. Care should be exercised in removing or replacing a spare tire not to strike the body of the car.

NOTE: If a wrap-around type tire cover is used, it should have slots cut in it opposite the two upper lugs on the rim, so as to permit these lugs to seat in the notches in the support arms.

Wire Wheel Carrier

To remove the spare wire wheel from the carrier, first unscrew the dust cap which protects the lock. Insert the key in the lock and turn it to the



Figure 18. After unlocking the lock, the large nut holding the wire wheel can be unscrewed with the hub cap wrench.



Figure 19. The clamp over the disc wheel can be unscrewed by hand after it is unlocked.

right. Then unscrew the large nut, using the hub cap wrench. The wheel can then be taken off the carrier.

When installing the wheel on the carrier, tighten the nut as far as it will go. Then insert the key and turn it to the left.

Disc Wheel Carrier

To remove the spare disc wheel, unscrew the small dust cap and unlock the carrier by turning the key to the right. Then unscrew the large clamp, removing the large dust shield. The wheel can then be taken off the carrier, after unscrewing the cap nuts by which it is fastened.

When installing a wheel on the carrier, tighten the clamp and lock it in place by turning the key to the left.

Lock for Spare Tires on Fenders

When the spare tires or wheels are carried on the fenders, a lock is provided for each wheel or tire. This lock is fastened to the fender and must be removed before the tire or wheel can be removed. To remove the lock, insert the key and turn it to the right. The lock can then be lifted out.

When mounting spare tires in fenders, they should be deflated slightly before being put in the fenderwell, and should be fully inflated after they are in position. By following this method, a snug fit is secured, and the tires or tire covers are prevented from chafing.

Truing Up Rim

If a rim on a wood wheel does not run true, it may be trued up in the following manner: Rotate the wheel slowly and mark the part that runs farthest out from the face of the wheel. Loosen slightly the nuts diametrically opposite the mark, and then tighten the nuts on the marked side. Test the wheel again, and if it still does not run true, repeat the operation.



Figure 20. When spare tires are carried on the fenders, the lock must be removed from the fender before the spare tire can be removed.

Use of Jack in Changing Tires

When a tire is "flat," the axle is not always far enough above the ground to permit placing the jack directly under the axle. It is then necessary to make use of the adjustable shoulder which engages with teeth on the side of the jack.

The illustrations in Figure 21 show how the adjustable shoulder should be placed under the axles.

Changing Tires

If an inflated tire is always carried on the spare rim or wheel, the driver will seldom or never have to disassemble a tire from the rim. In case of tire trouble, it is then merely necessary to remove the rim or wheel with the flat tire and then install the spare in its place. Illustrated directions for performing this work on wood, wire and disc wheels are given on pages 36, 37 and 38.

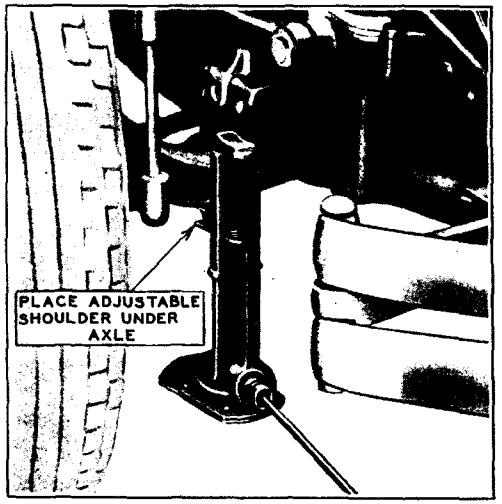

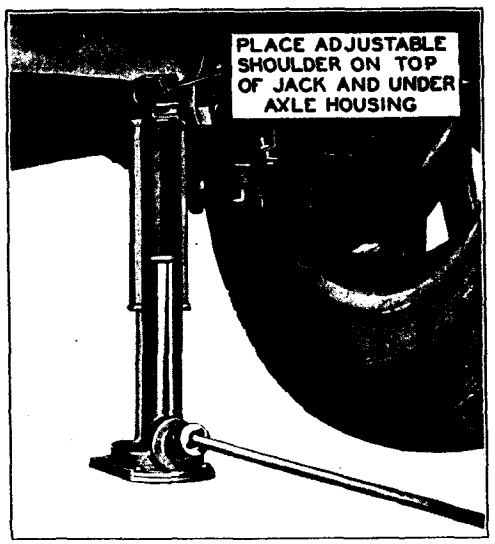

Figure 21. To jack up the car, it is necessary to have the jack in the proper position under the axle. The correct position for the front axle is shown above and for the rear axle, below.

Tire Balancing Marks

The tires are balanced to offset the weight of the valve stem. If a tire is removed, it must be re-installed in its original position with respect to the rim; otherwise the tire and wheel will be unbalanced.

A small red square is accordingly branded in the rubber on the side of each tire. This mark must always be in line with the valve stem.

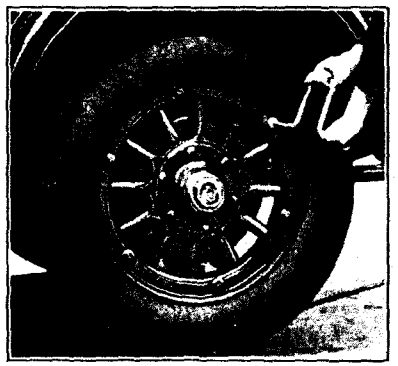

Figure 22a. Jack up the wheel until the tire clears the ground. Remove the dust cap and clamping nut from the valve stem. Remove the six rim clamps, unscrewing them with the brace wrench supplied in the tool kit.

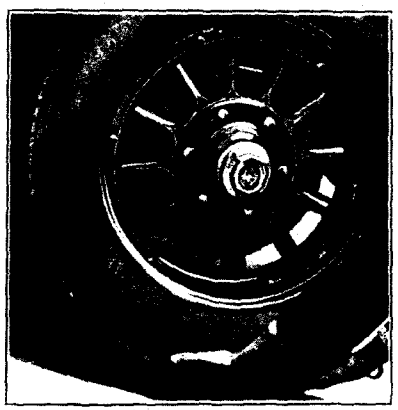

Figure 22b. Rotate the wheel until the valve stem is at the top, and pull the bottom of the rim away from the wheel.

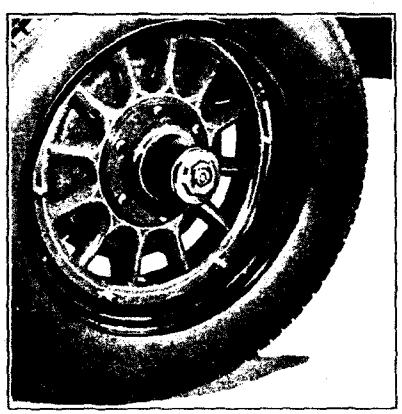

Figure 22c. Then rotate the wheel until the valve stem approaches the bottom, when the rim and tire will roll free from the wheel and can be removed without lifting.

To mount a rim, rotate the wheel until the hole for the valve stem is in the position shown in the last illustration. Insert the valve stem and rotate the wheel, which will carry the rim with it, until the valve stem is at the top. Then push the lower part of the rim into place. Install the rim clamps over the rim and turn the nuts partly down. Go over the nuts again and tighten them firmly. Install the valve stem clamping nut and the dust cap. Be sure the clamping nut is tight.

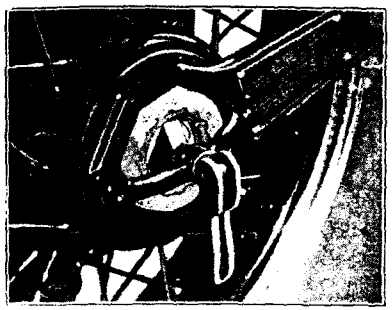

Figure 23a. Jack up the wheel until the weight of the car is off it, but with the tire still dragging. Place the hub cap wrench on the cap with the cam lever lowered, engage the sliding barrel puller in the slots and turn the puller one-quarter turn either way.

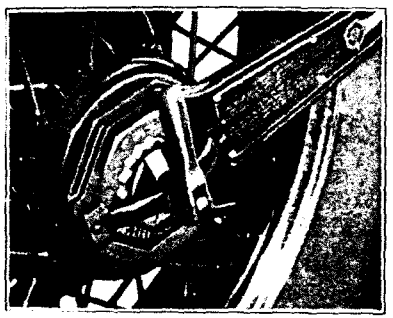

Figure 23b. Raise the lever up and over, thus drawing out the sliding barrel of the hub cap. If the barrel does not withdraw easily, tap the end of the wrench back and forth. This will release the pressure on the teeth of the sliding barrel and allow it to disengage.

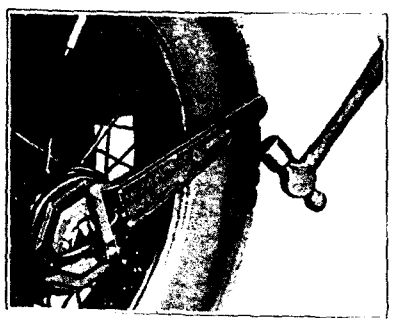

Figure 23c. Loosen the hub cap by striking the wrench a few times with a hammer. (The hub caps are marked with arrows showing the direction in which they screw on and off.) Then jack up the wheel, unscrew the hub cap and pull the wheel off the inner hub. Never attempt to remove the hub cap with the weight of the car on the wheel.

In installing the wheel, see that it is set up snugly on the corrugations on the inner hub. Hub caps are marked either "Right Side" or "Left Side," and must always be installed on the proper side. Start the cap by hand, taking care not to cross the threads. Then apply the hub cap wrench and disengage the sliding barrel as directed above. Securely tighten the cap, striking the end of the wrench with a hammer a few times. Lift up the cam lever. If the sliding barrel does not automatically engage, tighten the cap farther.

Figure 23. Changing Wire Wheels.

NOTE: The nuts on the right-hand wheels are marked R; those on the left are marked L. All nuts screw off in the direction the wheels rotate when the car is going backward, and on in the forward direction.

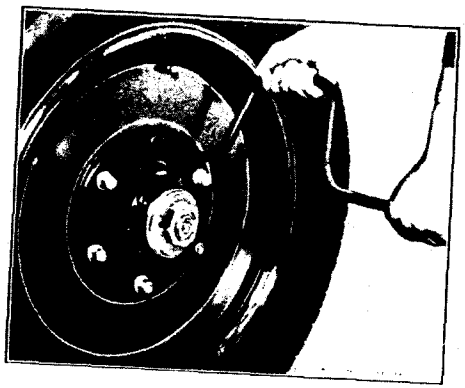

Figure 24a. To remove a front wheel, jack it up until the weight of the car is off it, but with the tire still touching. Then loosen the cap nuts around the wheel hub with the brace wrench in the tool kit. Jack the wheel up further, unscrew the nuts and remove the wheel. In removing a rear wheel, set the hand brake and jack the wheel all the way up.

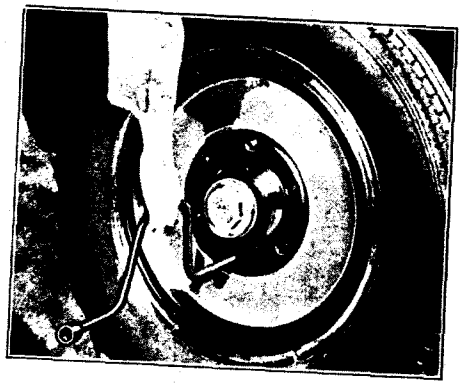

Figure 24b. In mounting disc wheels, use the rear end of the brace wrench as a pilot bar.

To mount a front wheel, bring it up close to the hub and pass the pilot bar through a lower hole and over a lower stud. Lift with the bar, and guide the wheel with the other hand. The weight of the wheel will keep the hub from turning, and the wheel will slip easily into place.

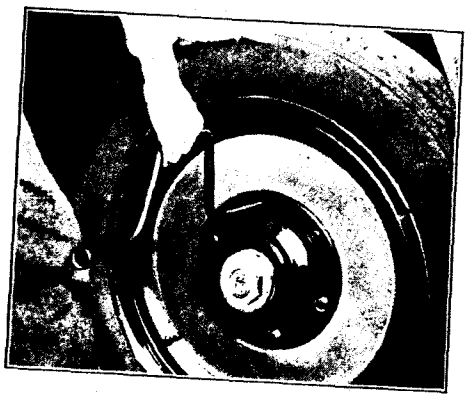

Figure 24c. To mount a rear wheel, set the hand brake and put the pilot bar through an upper hole and over an upper stud.

In either case, several nuts should be started by hand before the pilot bar is removed. The nuts should not be tightened in rotation. After tightening one nut, tighten the nut directly opposite. In this way the first two nuts center the wheel and insure a good fit. The nuts need not be as tight as they can be forced. They should be only moderately tight.

Figure 24. Changing Disc Wheels.

CHAPTER IV

Lubrication

Lubrication Schedule

SYSTEMATIC lubrication, at regular mileage intervals, is the only kind that is effective. On page 40 is a complete lubrication schedule, which, if faithfully followed, will insure correct lubrication for each wearing surface of the Cadillac car.

The unit of the schedule is 4000 miles, which is divided into four 1000-mile intervals. Corresponding to these is a series of four consecutive groups of lubricating operations. When the car has traveled 1000 miles, the points enumerated under Lubrication No. 1 should receive attention. At 2000 miles, Lubrication No. 2 is due, and so on until at 4000 miles, Lubrication No. 4 should be performed. At 5000 miles, the schedule begins again with Lubrication No. 1.

Lubrication Notice

In order that the driver may be continually reminded of the mileage at which the next lubrication is due, the speedometer is provided with a lubrication notice. This consists of a strip of black celluloid (Fig. 25), which is placed across the speedometer cover glass below the total mileage dial and which has two white spaces, one for the lubrication number and one for the mileage at which it is due.

Whenever the car is lubricated on the schedule, the figures then on the celluloid should be erased and the next lubrication number and the mileage at which it is due should be written or stamped in their places. If this notice is used, the driver need only glance occasionally at the speedometer and compare the mileage on the dial with the figures on the notice in order to plan for the necessary attention.



Figure 25. The lubrication notice is a continual reminder of when the next lubrication is due.

CADILLAC LUBRICATION SCHEDULE

OWNER'S NAME_____

ADDRESS_____

ENGINE NO._____ DATE DELIVERED_____

Do not wait for schedule lubrications before adding engine oil. The oil level should be checked every 100 to 150 miles and oil added if the indicator ball is below "Full." This is especially important on cars driven at high speed.

		LUBRICANT	LUBRICATION NO. AND MILEAGE AT WHICH DUE											
			1	2	3	4	1	2	3	4	1	2	3	4
			1000	2000	3000	4000	1000	2000	3000	4000	1000	2000	3000	4000
LUBRICATION NOS. 1 AND 3	CHECK RADIATOR LEVEL	WATER OR ANTI-FREEZE	O	O	O		O	O	O		O	O	O	
	ADD ENGINE OIL AS NECESSARY	ENGINE OIL	O		O		O		O		O		O	
	GENERATOR AND DISTRIBUTOR OIL CUPS	ENGINE OIL	O	O	O	O	O	O	O	O	O	O	O	O
	FAN—ADD ENGINE OIL	ENGINE OIL	O	O	O	O	O	O	O	O	O	O	O	O
	OIL CAN LUBRICATION	ENGINE OIL	O	O	O	O	O	O	O	O	O	O	O	O
	DOOR HARDWARE.	ENGINE OIL	O	O	O	O	O	O	O	O	O	O	O	O
	GREASE GUN CONNECTIONS	CHASSIS GREASE	O	O	O	O	O	O	O	O	O	O	O	O
	WATER PUMP GREASE CUP	WHEEL BEARING GREASE	O	O	O	O	O	O	O	O	O	O	O	O
	*ADD WATER TO STORAGE BATTERY	DISTILLED WATER	O	O	O	O	O	O	O	O	O	O	O	O
	CHECK TIRE INFLATION		O	O	O	O	O	O	O	O	O	O	O	O
LUBRICATION NO. 2	DRAIN AND REPLACE ENGINE OIL	ENGINE OIL		O		O		O		O		O		O
	CLUTCH THRUST BEARING	FIBER GREASE		O		O		O		O		O		O
	TRANSMISSION—ADD LUBRICANT	GEAR LUBRICANT		O		O		O		O		O		O
	REAR AXLE—ADD LUBRICANT	GEAR LUBRICANT		O		O		O		O		O		O
	STEERING GEAR—ADD LUBRICANT	GEAR LUBRICANT		O		O		O		O		O		O
LUBRICATION NO. 4	WHEEL BEARINGS	WHEEL BEARING GREASE				O				O				O
	SPEEDOMETER DRIVE SHAFT	WHEEL BEARING GREASE				O				O				O
	FLUSH COOLING SYSTEM					O				O				O
	CHECK SHOCK ABSORBERS	SPECIAL OIL												O
	REPLACE OIL FILTER CARTRIDGE													O

THE FOLLOWING OPERATIONS CANNOT BE PLACED ON A MILEAGE BASIS AND ARE NOT INCLUDED IN THE ABOVE SCHEDULE:

REMOVE OIL PAN AND CLEAN PAN AND SCREEN—ONCE A YEAR OR WHENEVER OIL FILTER IS CHANGED

THIN REAR AXLE AND TRANSMISSION LUBRICANT AS REQUIRED FOR LOW TEMPERATURES.

DRAIN AND REPLACE REAR AXLE AND TRANSMISSION LUBRICANT—AT BEGINNING OF MILD WEATHER IN SPRING

REMOVE SPRING COVERS ONCE A SEASON AND REPACK WITH PETROLEUM JELLY.

*IN SUMMER, INSPECT BATTERY EVERY 500 MILES OR AT LEAST EVERY 2 WEEKS.

RECORD ON OTHER SIDE

Figure 26. This is a fac-simile of the Cadillac Lubrication Schedule and Record Card. Provision is made on the back of the card for recording when and where the car is lubricated. A copy of this card can be obtained on request from Cadillac distributors and dealers.

Cadillac distributors and dealers are prepared to sell lubrication based on this schedule. A car that is being lubricated on the schedule can be taken to any authorized Cadillac-LaSalle service station, and without further ordering than to specify "Schedule Lubrication," the car will receive the necessary attention.

Lubrication Chart

The lubrication chart which accompanies this manual gives complete detailed instructions for lubricating the car. All of the points which require lubrication are designated on this chart, together with the kind of lubricant to be used, the method of applying it and the frequency with which it should be applied.

The operations are grouped on the chart in the same manner as on the schedule shown in Fig. 26. If the car is lubricated at an "Authorized Station," this schedule will be followed; if not, whoever does the lubrication should follow the schedule and chart exactly.

Lubricants

The selection of proper lubricants should be one of the first concerns of the owner in his attention to the lubrication of the car. The lubricants must not only be of high quality, but their viscosity and other characteristics must be suited to the car.

The owner is urged to consult the distributor or dealer from whom he purchased his car in regard to the names of lubricants which have been tested and approved for use in the Cadillac car.

Engine Oil

The chart of engine oil recommendations given on page 42 indicates the proper grades of oil to be used for average driving and for prolonged high speed driving.

Gear Lubricant

Lubricant conforming to the specifications for Gear Lubricant must be used in the transmission, rear axle and steering gear. It is particularly important that only recommended lubricants be used in the transmission. Oil or soap greases will *not* perform satisfactorily.

Lubricants conforming to these specifications may be used without thinning during all weather, except winter weather below temperatures

of 20° above zero. Below this temperature, thinning with kerosene is necessary, in order to secure easier gear shifting, easier steering and proper lubrication of gears and bearings.

Chassis Grease

Lubricant conforming to the specifications for Chassis Grease is recommended for all chassis points fitted with grease gun connections. Do not use ordinary cup grease, as such greases are not effective enough to lubricate satisfactorily over the 1000-mile interval.

ENGINE OIL RECOMMENDATIONS

TYPE OF SERVICE	SUMMER	WINTER		
	All temperatures above 32° F.	Between 32° and 15° above	Between 15° above and 15° below zero	Below 15° below zero
AVERAGE DRIVING (No prolonged high speed driving)	*S. A. E. visc. 40 or 50	S. A. E. visc. 20	S. A. E. visc. 10 or S. A. E. visc. 20 thinned with 1 qt. kerosene to 7 qts. oil	S. A. E. visc. 10 thinned with 1 qt. kerosene to 7 qts. oil or S. A. E. visc. 20 thinned with 2 qts. kerosene to 6 qts. oil
	These oils are not suitable for prolonged high speed driving. Change to oil shown below before starting on long trip at speeds above 45 m. p. h.			
PROLONGED HIGH SPEED DRIVING.	CADILLAC APPROVED "HEAVY DUTY" OILS—SUMMER AND WINTER These are oils having an S. A. E. viscosity of 50-60 which are required to meet certain specifications as to volatility in order to demonstrate their fitness for prolonged high speed driving. To make certain of using an oil approved for this service, consult your Cadillac distributor or dealer. NOTE: Approved lubricants vary in their suitability for winter use. If an oil with a high pour test is used in winter and the car is not kept in a heated garage, add from 1 to 2 quarts of kerosene after a long drive at high speed before the car is stored for the night. Also when draining the crankcase, add from 1 to 2 quarts of kerosene to the fresh oil unless starting immediately on a long trip at high speed.			

*The system used in this table to designate body or viscosity is the one recently developed by the Society of Automotive Engineers and adopted by all oil companies. It takes the place of the old indefinite method of describing oils as "Light," "Medium," "Heavy," etc. Oil should be called for by these numbers. If a filling station attendant does not know the S. A. E. numbers of his oils, the following grades can be substituted in emergency; S. A. E. 10, Extra Light; S. A.E. 20, Light; S. A. E. 40, Heavy; S. A. E. 50-60, Extra Heavy.

Wheel Bearing and Cup Grease

Greases approved under the specifications for Wheel Bearing and Cup Grease are suitable for lubricating the wheel bearings and the water pump.

This grease is not recommended for chassis lubrication, as Chassis Grease is much more effective.

Fiber Grease

Fiber grease approved under the specifications for this type of lubricant is recommended for the clutch release bearing.

Engine Lubrication

The supply of oil is carried in the pressed steel reservoir that covers the bottom of the crankcase. The oil is circulated by a gear pump inside of the crankcase. The pump is driven by a vertical shaft, which is, in turn, driven by a spiral gear on the camshaft. The oil circulated by the pump lubricates the main and connecting rod bearings, the camshaft bearings, the cylinder walls, pistons and piston pins, the front end chains and the valve mechanism.

There are a few points on the engine that are not taken care of in the pressure system. These are the generator and distributor oil cups, the water pump and the fan. Lubricating instructions for these points are given in

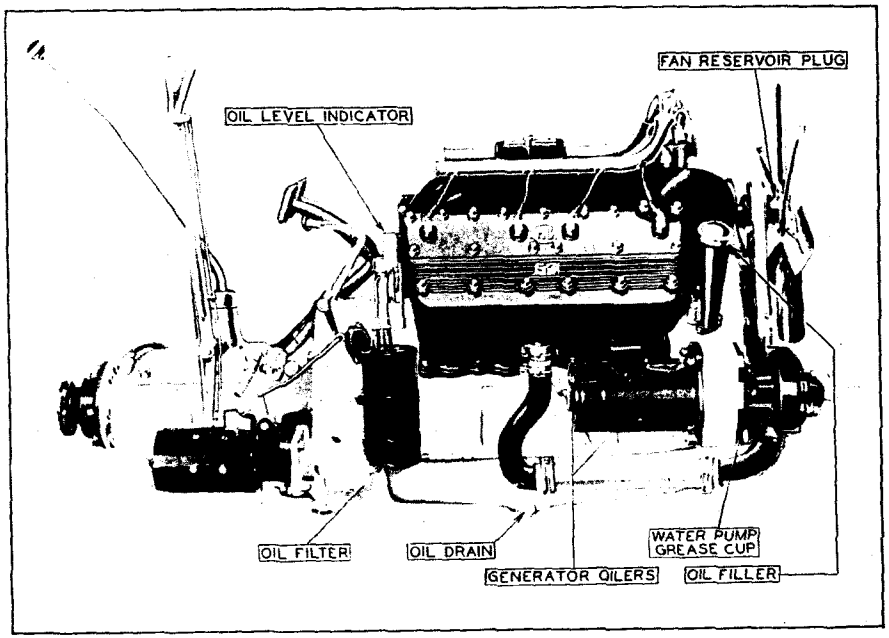

Figure 27. Showing the location of the oil filter, oil level indicator, oil pan drain plug and other lubrication features.

the lubrication chart. A special explanation of the fan lubrication is given at the end of this chapter.

Oil Level

The normal capacity of the oil pan is two gallons, which fills it to the level of the screen in the pan. When the oil pan contains this amount, the oil level indicator on the right-hand side of the engine (Fig. 27) indicates "Full." As the oil level descends, the indicator indicates "Fill" and then "MT" (Empty). Oil should be added as soon as the indicator ball has dropped to "Fill." If the indicator indicates "MT," under no circumstances should the engine be run until oil has been added.

The mileage interval at which oil must be added depends upon individual circumstances. It is recommended that the oil level indicator be checked every one hundred to one hundred and fifty miles, although it is improbable that oil will be required as frequently as this.

Crankcase Ventilating System and Oil Filter

Cadillac engines are equipped with a crankcase ventilating system, which prevents contaminating of the lubricating oil from seepage vapors; and an oil filter, which removes any dirt or solid matter from the oil.

The crankcase ventilating system is entirely automatic and functions throughout the life of the car without requiring any attention from the owner. The oil filter, however, gradually becomes filled with the solid matter taken from the oil until it becomes so clogged that it ceases to function. For this reason, it is necessary to replace the filter cartridge every 12,000 miles.

It is important that the filter cartridge be replaced just as soon as the 12,000 miles are up. Otherwise the whole purpose of the oil filter is defeated, and wear of the engine parts will result from the dirty oil. Filter cartridges for replacement can be obtained from Cadillac distributors and dealers or from United Motors Service stations.

Replacing Engine Oil

Although the crankcase ventilating system and the oil filter described in the preceding section greatly prolong the useful life of the oil, it is recommended that the oil be drained and replaced with fresh oil every 2000 miles.

To drain the oil, simply remove the drain plug (Fig. 27). Be sure to reinstall the drain plug before adding the fresh oil. Two gallons of fresh oil should be added, or enough to bring the oil level indicator ball to "Full."

At the end of the first 1000 miles, it is recommended that the car be taken to a Cadillac service station to have the oil pan and screen removed and cleaned with gasoline or kerosene. This should be repeated each time that the filter unit is replaced.

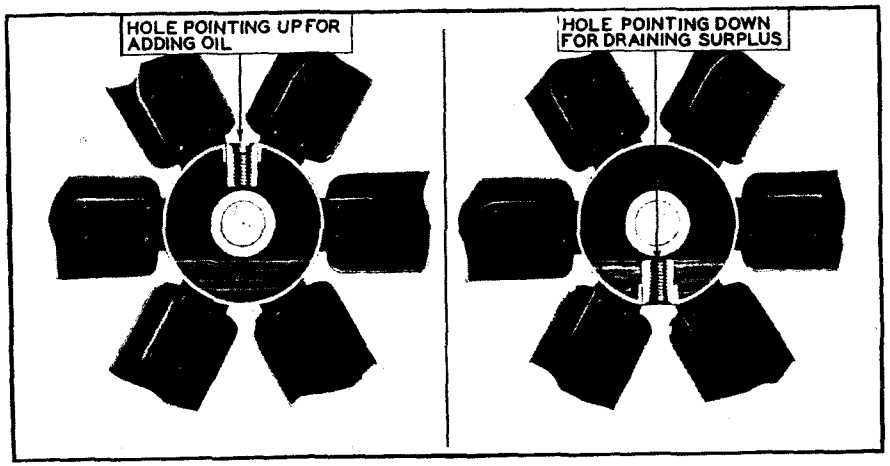

Figure 28. Oil for lubricating the fan is carried in the fan hub. The supply must be replenished every 1000 miles. Grease or heavy oil must never be used in the fan.

Fan

The fan is lubricated by oil contained in a reservoir in the fan hub. The screw plug in the outside of the reservoir should be removed every 1000 miles, and engine oil should be added to bring the oil to the proper level. In adding oil, it is necessary to add somewhat more than enough and then drain off the surplus by turning the fan so that the hole points down. A short stand-pipe inside the reservoir insures that the proper amount of oil is retained.

If no oil runs from the hole when it is first turned down, do not assume that the oil level is correct. Sometimes the reservoir is "air-bound," and the hole should be left pointing down for at least half a minute to give the air a chance to work in. A cloth or piece of waste may be held under the hole to catch the oil.

CHAPTER V

Cold Weather Operation

THE Cadillac is an all-season car, and no owner need hesitate to make full use of his car in severe winter weather, as well as at other times. Satisfactory operation in freezing weather, however, depends upon having the car prepared for cold weather and in giving it the special attention which is required at that time. In this chapter has been grouped all the information relating to care and operation of the car during cold weather. It should be reviewed just prior to the beginning of the winter season.

Preparing for Cold Weather

Anti-Freezing Solutions

The available commercial materials for preparing anti-freezing solutions for automobile radiators are denatured alcohol, distilled glycerine, and ethylene glycol.

Denatured alcohol solutions are, at present, the most generally used anti-freezing solutions. Denatured alcohol is widely distributed, affords protection against freezing, and is not injurious to the materials used in the cooling system.

There are two principal objections to denatured alcohol. Alcohol is lost by evaporation, especially on heavy runs, and unless the solution is tested periodically and sufficient alcohol added to replace the loss by evaporation, the engine or radiator, or both, are likely to be damaged by freezing.

The car finish is damaged by contact with the alcohol solution or vapors from the solution. Any alcohol accidentally spilled on the finish should be flushed off immediately with a large quantity of water.

The following table gives the freezing temperature and specific gravity of solutions of denatured alcohol and water:

Lowest Temperature Expected	Per cent by Volume	Specific Gravity (at 60° F.)	Qts. Alcohol required to make 6 gals. solution
10° F.	30	.9668	6¼
0° F.	38	.9567	8
—10° F.	45	.9475	9½
—20° F.	51	.9350	10¾
—30° F.	57	.9260	12

Distilled glycerine and ethylene glycol solutions are, in first cost, more expensive than alcohol, but as they are not lost by evaporation, only water need be added to replace evaporation losses, except that any solution lost mechanically, such as leakage, foaming, etc., must be replaced by additional new anti-freezing solution. These solutions under ordinary conditions are not injurious to the car finish.

The principal objections to glycerine and ethylene glycol are the tendency of these solutions to loosen the scale and iron rust which forms in the water passages of the cylinder block and head, and the difficulty of securing and maintaining tight, leakproof connections. It is absolutely necessary to thoroughly clean and flush the entire cooling system before glycerine or ethylene glycol is used.

It is also necessary to tighten or replace the cylinder head gaskets and pump packing. The cylinder head gaskets must be kept tight to prevent the solution from leaking into the crankcase where it might cause gumming and sticking of the moving parts. The pump packing must be kept tight to prevent air from being drawn into the cooling system in order to avoid foaming and other difficulties which may result when air is present.

Glycerine or ethylene glycol should be used in accordance with the instructions and in the proportions recommended by the anti-freeze manufacturer.

In using a hydrometer to determine the temperature at which a solution will freeze, the test must be made at the temperature at which the hydrometer is calibrated. If the solution is warmer or colder, it must be brought to this temperature or large errors may result. In some cases these errors may be as large as 30 degrees Fahrenheit.

Salt solutions, such as calcium or magnesium chloride, sodium silicate, etc., honey, glucose and sugar solutions and oils are not satisfactory for use in automobile radiators.

Capacity of Cooling System

The capacity of the cooling system is six gallons when filled to the proper level. It is not necessary to add liquid to the radiator whenever the level falls below the filler. There is sufficient liquid in the cooling system if the upper tank is half-full, and any liquid in excess of this is usually forced out through the overflow pipe as soon as the engine becomes warm. When water is used, any loss from this cause is of little consequence, but in winter, to conserve anti-freeze, it is important to avoid adding more liquid than is necessary.

Winter Lubrication

Lubrication of the car requires special attention in winter, not only to insure proper lubrication of the moving parts, but to secure the same ease of operation in starting, steering and shifting gears as during warm weather.

The chart of engine oil recommendations on page 42 gives the proper grade of oil to be used for cold weather driving. It will be noted that lighter oils can be used for cold weather providing no prolonged high speed driving is done. For prolonged high speed driving, "Heavy duty" oils must be used. Authorized Cadillac-La Salle Service Stations are prepared with full information on winter lubrication.

A small amount of kerosene should be added to the oil in the fan reservoir at the beginning of cold weather.

The lubricant in the transmission, rear axle and steering gear should also be thinned as soon as the weather is so cold that the transmission gears are hard to shift. If a sufficient amount of kerosene is added to provide for the lowest winter temperature expected, it will not be necessary to add kerosene again thereafter during the winter. If ten per cent kerosene is added, this will take care of temperatures down to ten below zero.

Storage Battery

The electrical system of an automobile has much more to do in winter than in summer. The engine is harder to crank and must usually be cranked longer before it starts. The lights are also used to a much greater extent than during the long days of summer. All this means that the battery must be ready for increased demands.

It is therefore a good plan in preparing for the winter season to see that the battery is well charged to begin with, that the battery connections are clean and tight, and that the charging rate of the generator is sufficient.

Gasoline System

The carburetor on the Cadillac engine has automatic compensation for temperature. Nevertheless it is a good plan to have the carburetor adjustment checked when cold weather arrives. This inspection should give special attention to the carburetor choke control to make sure that the enriching device at the carburetor is fully effective when the choke button is operated.

In warm weather, a small amount of water in the gasoline has little or no effect on the running of the engine. In freezing weather, however, even a small amount of water may freeze and stop the entire flow of fuel to the carburetor. One of the things to be done in preparing for winter weather, therefore, is to clean the gasoline filter and the sediment chambers in the gasoline system.

Starting the Engine

Carburetor Enriching Button

The first difference between starting the engine in cold weather and starting the engine in warm weather is in the greater use of the carburetor enriching device necessary in cold weather. Gasoline does not vaporize as readily at low temperatures, and in order to supply the cylinders with a gaseous mixture rich enough to be ignited, the proportion of liquid gasoline to air must be increased.

At the same time, it is important not to apply the enriching device more than is necessary. The unvaporized gasoline collects on the cylinder walls and works down past the pistons, washing off the lubricant as it goes. Although dilution of the oil supply with this unburned gasoline is minimized by the crankcase ventilating system, it is best to avoid an excess of liquid gasoline in the combustion chambers by careful and judicious use of the enriching device.

The following rule should govern the use of the enriching button in winter weather: Pull the enriching button back just as far as it is necessary to start the engine, but as soon as the engine starts, let the button return as far as possible without causing the engine to stop or slow down. Then release the button entirely as soon as the engine is warm enough to permit doing so.

Priming the Carburetor

In extremely cold weather, if the engine does not start after cranking for a few seconds with the enriching device fully applied, release the starter pedal. Then prime the carburetor by opening and closing the throttle once or twice rather rapidly with the accelerator. Opening and closing the throttle operates a throttle pump on the carburetor and raises the level of the gasoline in the carburetor bowl. The carburetor should never be primed in warm weather and should not be primed unnecessarily in cold weather. Excessive priming is likely to make starting difficult rather than easy.

Position of Throttle Hand Lever

The correct position of the throttle hand lever for starting in cold weather is the same as for starting under other conditions, that is, about one-fourth

the way down from the idling position. In warm weather, however, the lever may be returned to the idling position almost as soon as the engine is started. In cold weather, the throttle must be left slightly open until the engine becomes warm.

Position of Spark Control Lever

It is the practice of some drivers to move the spark control lever all the way to "retard," whenever starting the engine. This is the correct position if the engine is to be cranked by hand, but if the engine is to be cranked with the starter, there is no reason for retarding the spark, and in extremely cold weather "popping back" in the carburetor is less likely to occur if the spark is advanced.

Use of Starter

In extremely cold weather, when the car has been standing long enough to become thoroughly chilled, it is a good plan to disengage the clutch during the cranking operation. If this is not done, the starter is called upon to turn the jackshaft gears in the transmission in addition to cranking the engine. At ordinary temperatures, the additional energy required is negligible, but in extremely cold weather, the lubricant in the transmission offers sufficient resistance to rotation of the transmission gears to increase considerably the demand upon the battery and to retard the cranking speed.

Use of Accelerator Before Engine Is Warm

In cold weather, after the engine has been started and before it has run long enough to become warm, the engine cannot deliver its normal power, and it should not be called upon to do so. In accelerating the engine to start the car and in accelerating the car after the transmission is in gear, do not open the throttle suddenly or too far. To do so is not only to invite "popping back" in the carburetor, but to increase the amount of excess unvaporized gasoline in the combustion chambers, both of which results are undesirable. For this reason, also, starting in intermediate should never be attempted when the engine is cold.

CHAPTER VI

General Care

No attempt has been made to include in this manual directions for making adjustments or repairs to the car. Most Cadillac owners prefer to depend for such work on authorized Cadillac-La Salle service stations, as these stations can invariably perform the work more conveniently and economically.

Every owner should, however, know how to perform the few simple operations of general care described in this chapter. These operations are not difficult enough to necessitate a visit to the service station, although this work can also be done in the service station, if desired.

Storage Battery

The storage battery is carried in a compartment between the right-hand running board and the frame. The door of the compartment operates the same as the door of the tool compartment, described on page 30.

The battery is filled with an acid solution from which the water slowly evaporates, and fresh distilled water must be added to each of the three cells at regular intervals to bring the level up to the bottom of the filling tubes. Distilled water should be added at least every 1000 miles, and in warm weather, every 500 miles, or at least every two weeks. If distilled water is not available, melted artificial ice or rain water caught in an earthenware receptacle may be used. Hydrant water or water that has been in contact with metallic surfaces will cause trouble if used. Acid must never be added to the battery.

After adding water to the storage battery in freezing weather, the car should immediately be run far enough to mix the water and acid solution thoroughly. If the car is parked immediately after adding water, the water is likely to stay on top of the acid solution and may freeze, causing extensive damage.

As the storage battery is charged and discharged, the solution reacts chemically with the plates of the battery, the specific gravity of the solution changing as the reaction proceeds. The state of charge of the battery

is thus indicated by the specific gravity of the solution. As the battery is charged, the specific gravity of the solution increases, reaching 1.270 to 1.285 when the battery is fully charged. The specific gravity of the solution decreases as the battery is discharged. A fully discharged battery has a specific gravity of 1.150 to 1.165.

A hydrometer is the instrument used to measure the specific gravity of a solution. A hydrometer syringe is a hydrometer especially designed for convenience in testing the specific gravity of the acid solution in the storage battery. A hydrometer syringe can be obtained at any battery service station. Be sure and get a reliable instrument, for cheap ones may be in error as much as 25 or 30 points.

The specific gravity of the acid solution should never be tested immediately after adding distilled water. If the solution is below the plates, so that it cannot be reached with the syringe, add the necessary amount of water, then drive the car for a few hours before taking the hydrometer reading.

Cooling System

The cooling system should be kept filled with 6 gallons of water, except in freezing weather, when a suitable anti-freezing solution, such as those described on page 46, must be used.

The cooling system should be drained and flushed every 4000 miles. If possible, this should be done at a Cadillac service station, or where there are facilities for reversing the flow of water through the radiator. If this is not possible, use the following method:

Run the engine until the opening of the radiator shutters indicates that the engine is warm. Stop the engine and immediately open the drain valve.

After the liquid has drained off, refill the cooling system with hot water and repeat the operation described above. If, in draining the second time, the water is very dirty, it may be advisable to repeat the flushing operation a third time, placing one or two handfuls of sal-soda in through the radiator filler. The sal-soda must not be permitted to get on the finish of the hood or radiator. If sal-soda is used, the cooling system must be drained and flushed again before refilling for use.

Gasoline Filter

A gasoline filter (Fig. 29) is provided in the gasoline line between the vacuum tank and the carburetor. This filter has a glass bowl through

which the accumulation of water and sediment can be easily seen. The bowl should be removed and the gauze screen should be cleaned, as soon as any accumulation appears in the bowl. This can be done as follows:

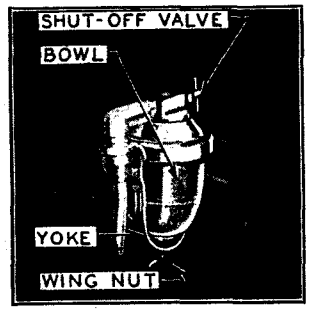

Figure 29. To remove the filter bowl for cleaning the screen, close the shut-off valve, loosen the wing nut at the bottom and disengage the supporting yoke.

First shut off the gasoline by turning clockwise the small T-handle valve at the side of the filter. Then unscrew the thumb screw under the bowl, after which the yoke supporting the bowl can be swung to one side and the bowl can be removed. If the screen does not come off with the bowl, it can be removed by pulling it straight down.

In putting back the bowl, make sure that it seats properly against the cork gasket in the top of the filter before tightening the thumb screw. Do not forget to turn the gasoline on by turning the valve counterclockwise as far as it will go.

There is also a strainer in the vacuum tank at the point where the gasoline enters the inner chamber. The strainer should be removed and cleaned occasionally. The strainer is accessible after disconnecting the feed pipe and unscrewing the inlet elbow.

Temporary Brake Adjustment

It is recommended that all adjustment of the brakes be done at an authorized Cadillac-La Salle service station. In an emergency, however, the following temporary adjustment can be made by the driver.

Each brake is fitted with an adjusting nut on the cam lever, as shown in Fig. 30. To tighten the brake adjustment turn all four adjusting nuts half a turn clockwise. These adjusting nuts lock each sixth of a turn.

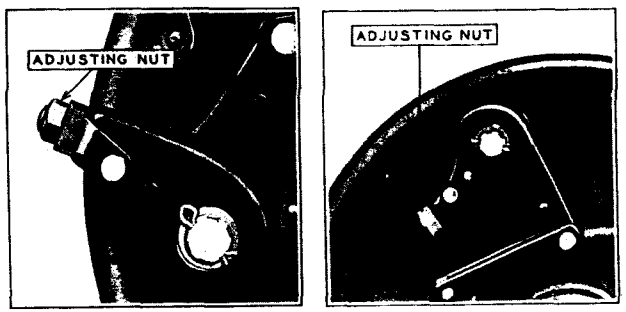

Fig. 30. A temporary brake adjustment can be secured by turning the adjusting nut on each brake clockwise ½ turn. The front brake is at the left, the rear brake at the right.

Body

Care of Finish

The Duco finish of Cadillac bodies can be kept new and lustrous with the simplest care. The car should merely be wiped off every few days with a soft dry cloth. An occasional polishing with Duco No. 7 or I-sis or some other recognized Duco polish (but never with furniture polish) will prove beneficial.

If the finish is cared for by being wiped at regular intervals, it will not need to be washed, except when it has accumulated a considerable amount of mud or dust. When washing the car, use plenty of clean cold water. Do not use hot water, and do not wash the hood while it is hot, as this will in time destroy the luster. Do not use soap.

If a hose is used in washing, do not use a nozzle, but let the water flow gently from the hose and flush off the dirt gradually. A soft wool sponge can be used to advantage in removing dirt.

After the washing is completed, squeeze the sponge as dry as possible and pick up all water from crevices. Then thoroughly wet a clean soft chamois, wring it as dry as possible and dry the finish. The finish can then be rubbed with a clean soft cloth to bring out the luster.

Care of the Top

Ordinary dust can be removed from the top with a soft dry cloth. Grease spots, stains and dirt film can be removed by washing with a mild, neutral soap. Rinse thoroughly with clear water to remove all traces of the soap, then dry with a chamois or cloth. Gasoline, naphtha, kerosene and fabric cleaners should not be used for cleaning the top, as such preparations are likely to dull the luster and damage the fabric, causing leaks.

If the top becomes dull or check-marked, clean it thoroughly and apply a coat of Du Pont No. 7 Auto Top Finish. This should be applied with a flat varnish brush and allowed to dry over night. This will restore the luster, protect the top fabric, and keep it thoroughly waterproof. A coat of this finish every six months will keep the top in perfect condition.

Cleaning Upholstery

To keep the upholstery in closed cars in the best condition, it should be cleaned thoroughly at least once a month with a whisk broom and vacuum cleaner. Dirt and grit accumulating in the fabric wear it out faster than use.

Spots on the upholstery may be cleaned with any good dry cleaner. When the cleaner has thoroughly evaporated, apply a hot flatiron wrapped in a wet cloth. Steaming the fabric and rubbing lightly against the nap will raise the nap to its normal position.

Door Hardware

Many owners who give careful attention to lubrication of the chassis do not give the same attention to the lubrication of door locks and hinges. If the door hardware is to operate properly, it must be lubricated regularly. Directions for this lubrication are included in the lubrication chart, and these directions should be followed as faithfully as the rest of the chart.

CHAPTER VII

Storing Car

If the car is not to be used for a period of several months, it should be protected from deterioration during the period when it is not in use by carefully preparing it for storage.

Engine

To prepare the engine for storage, proceed as follows: Run the engine until opening of the radiator shutters indicates that the engine is warm. This may be done by driving on the road or by running the engine idle. In the latter case, care should be taken that there is sufficient ventilation to avoid injury from carbon monoxide poisoning. (See page 21.)

After the engine is warm, place the car where it is to be stored and shut off the flow of gasoline to the carburetor by turning the valve above the filter. As soon as the engine starts to slow down, raise the polished aluminum cap on top of the carburetor and inject three or four tablespoonfuls of clean fresh engine oil into the carburetor. Injection of the oil will stop the engine.

Remove the spark plugs. Inject two or three tablespoonfuls of engine oil into each spark plug hole, and before replacing the plugs, crank the engine three or four revolutions with the ignition switched off. This will tend to distribute the oil over the cylinder walls. The engine should not be started again after injecting the oil. If it is started, it will be necessary to repeat the treatment.

Drain the cooling system.

Storage Battery

If the car is to be stored during the winter, the storage battery should have special treatment in order to protect it against freezing.

Shortly before the car is used for the last time, distilled water should be added to bring the level of the solution up to the bottom of the filling tubes. (See page 51.) After the water added has had an opportunity to mix thoroughly with the acid solution by running the car or engine, the specific gravity should be taken with a hydrometer. If the specific gravity

of the solution is above 1.270, there will be no danger of the acid solution freezing. If, however, the specific gravity is below 1.270, the battery should be removed and charged. Unless the battery is fully charged, or nearly so, it is probable that the acid solution in the battery will freeze and cause extensive damage.

The battery ground connection should in all cases be disconnected during storage, as a slight leak in the wiring will discharge the battery and lower the specific gravity to the point where the solution may freeze.

If possible, the storage battery should be removed and charged from an outside source every two months during the storage period.

Tires

During the storage of the car, it is best to remove the tires from the rims and to keep the casings and tubes in a fairly warm atmosphere away from the light. The tubes should be inflated slightly after the tires have been removed.

If it is not convenient to remove the tires from the car, and the car is stored in a light place, cover the tires to protect them from strong light, which has a deteriorating effect on rubber.

The weight of the car should not be allowed to rest on tires during the storage period. If tires are not removed, the car should be blocked up, so that no weight is borne by the tires. The tires should also be partly deflated.

Body and Top

A cover should be placed over the entire car to protect it from dust. In storing an open car, the top should be up.

Taking Car Out of Storage

In putting into use again a car that has been stored, it is advisable, unless the storage battery has been removed and charged at periodic intervals, to remove the battery from the car and give it a fifty-hour charge at a four-ampere rate. If the battery has received periodic charges, or if the specific gravity is above 1.200, simply add distilled water to the proper level and connect the leads. If there is a greenish deposit on the terminals of the battery, remove this with a solution of bicarbonate of soda (common cooking soda) and water. Do not allow any of this solution to get into the battery.

Before starting the engine, drain the oil from the oil pan and remove and clean the oil pan and screen. After reinstalling the oil pan, add eight quarts of fresh engine oil. Fill the cooling system, being sure to use anti-freezing solution in freezing weather. Remove the spark plugs and inject two or three tablespoonfuls of engine oil into each cylinder. Reinstall the spark plugs and, with the ignition switched off, crank the engine a few seconds with the starter to distribute the oil over the cylinder walls.

Start the engine in the usual manner. As soon as the engine starts, immediately let the carburetor enriching button go as far forward as possible without causing the engine to stop or slow down materially, and then open the throttle until the ammeter reads approximately 10 with all lights switched off. While the engine is running, lift the aluminum cap on top of the carburetor and inject two or three tablespoonfuls of engine oil into the carburetor. It is a good plan to run the car outdoors as soon as this has been done. Release the carburetor enriching button entirely as soon as the engine is warm enough to permit it.

CHAPTER VIII

Specifications and License Data

Type of engine	8 cyl. V-type
Diameter of cylinder bore	$3\frac{5}{16}$ in.
Length of stroke	$4\frac{15}{16}$ in.
Piston displacement	341
Horsepower (N. A. C. C. rating)	35.1
Engine number	See below
Capacity of gasoline tank	21 gals.
Capacity of engine lubricating system	2 gals.
Capacity of cooling system	6 gals.
Capacity of transmission	$2\frac{1}{2}$ qts.
Capacity of real axle	$2\frac{1}{2}$ qts.
Wheelbase	140 in.
Tires	7.00-20
Valve setting, inlet	.004 in.
Valve setting, exhaust	.006 in.
Spark plug setting	.025-.028 in.
Contact point setting	.027 in.
Generator charging rate, maximum	18-20 amps. cold 8-10 amps. hot
Fan belt slack	$\frac{5}{8}$ in.
Front axle toe-in	$\frac{1}{8}$ to $\frac{1}{4}$ in.

Engine and Unit Assembly Numbers

Each Cadillac car, when shipped, carries an engine number, which is also a serial number. This is the number to be used in filling out license and insurance applications and in general reference of the car. The engine number is stamped on the car in two places: On the name plate on the front face of the left side of the dash, and on the crankcase just below the water inlet on the right-hand side.

The various units, such as the transmission, steering gear, etc., also carry unit assembly numbers. These are located as described below. It is im-

portant in ordering parts to give, not only the engine number of the car, but also the unit assembly number of the unit to which the part belongs.

Transmission number—on the upper left-hand edge of the flange by which the transmission is bolted to the crankcase.

Steering gear number—on the steering gear housing, just below the grease gun connection.

Carburetor number—on right front face of the flange by which the carburetor is attached to the intake header.

Generator number—on the side of the generator just in front of the cut-out relay.

Starting motor number—on the right-hand side of the starter, just below the switch.

Front axle number—on the upper surface of the axle I-beam at the right-hand end just above the steering stop screw.

Rear axle number—on the rear surface of the axle housing just to the right of the cover plate.

Chassis (frame) number—on the upper surface of the left-hand side bar, just ahead of the steering gear.

INDEX

A

Accelerator 11
Accelerator, use in cold weather 50
Adding water to battery 51
Adjustable seat 24
Adjustments 6
Air pump for tires 32
Alcohol for anti-freeze 46
Ammeter 20
Anti-freeze solutions 46
Authorized service stations 5

B

Balancing marks on tires 35
Battery 51
Battery, preparing for storage 56
Body, care of 54
Brake adjustment 53
Brakes 19

C

Cadillac service 5
Carbon monoxide poisoning 21
Carburetor enriching control 13, 49
Carburetor flooded 15
Carburetor heat control 14
Carburetor, to prime 49
Card, service 5
Care of car 7
Changing engine oil 44
Changing tires 35
Charging rate 20
Charges for service 6
Chart, lubrication 41
Chassis grease 42
Choke button 13
Cigar lighter 24
Cleaning car 54
Cleaning cooling system 52
Cleaning upholstery 54
Clutch pedal 16
Clutch, use of 16
Coasting 18
Coincidental lock 9
Cold weather lubrication 47
Cold weather operation 46
Compartment for tools 30
Cooling system 47, 52
Crankcase ventilating system 44
Curtain fasteners 28
Curtains 25
Cylinder heads, high compression 12

D

Danger from carbon monoxide 21
Disc wheel carrier 34
Door hardware 55
Driver's seat adjustment 24
Driving speed when new 7
Duco, care of 54

E

Effect of alcohol on finish 46
Electric windshield cleaner 24
Engine fails to start 15
Engine knocks 12
Engine lubrication 43
Engine number 59
Engine oil 41
Engine oil, changing 44
Engine oil, thinning 47
Engine, preparing for storage 56
Engine, running in garage 21
Equipment 23

F

Fan lubrication 45
Fenderwells 34
Fiber grease 42
Filter for gasoline 52
Filter for oil 44
Finish, care of 54
Flat-rate service charges 6
Flooded carburetor 15
Flushing cooling system 52
Folding the top 25
Foot brakes 19

G

Gasoline filter 52
Gasoline gauge 9
Gasoline system, cold weather 48
Gear lubricant 41
General care 51
Glycerine for anti-freeze 46
Greases 42

H

Hand brakes 19
Headlamps 21
Heat control, carburetor 14
Heat indicator 11
High compression cylinder heads 12

I

Ignition control 12
Ignition control, cold weather 50
Ignition switch lock 9
Inflation pressure 31
Inspection lamp 24
Inspections 8

J

Jack, use of 34

K

Keys 9
"Knocking" in engine 12

L

License data 59
Lighting switch 21
Locks 9
Locks for spare tires 33, 34
Lubricants 41
Lubrication 7, 39
Lubrication, chart 41
Lubrication, cold weather 47
Lubrication, door hardware 55
Lubrication, engine 42
Lubrication, fan 45
Lubrication, notice 41
Lubrication, schedule 41

O

Obligations of owner 7
Oil filter 43
Oil level 42
Oil pressure 15
Oil pressure gauge 15
Operation 9, 46

P

Parts, uniform prices 7
Preventive service 8
Priming carburetor 49
Priming vacuum tank 15

R

Repair parts 7
Replacing engine oil 44
Replacing filter cartridge 43
Rim, truing up 34

S

Schedule lubrication 39
Seat adjustment 24
Service card 5
Service charges 6
Service stations 5
Shifting gears 18
Side curtains 25
Spare tire carriers 32
Spare tires in fenders 34
Spark control 12
Specifications 59
Specific gravity of battery 51
Speedometer 20
Starting the engine 14
Starting the engine, fails to start 15
Starting the engine, in cold weather 49
Storage battery 48, 51
Storing car 56
Syncro-mesh transmission 17

T

Temperature indicator 11
Throttle control 11, 50
Tire air compressor 32
Tire balancing marks 35
Tire carrier 32
Tire pressure 7, 31
Tire valve caps 31
Tires 31
Tires, changing 35
Tires, preparing for storage 57
Tools 30
Top, care of 54
Top, folding 25
Tourists, service to 5
Transmission control 17
Transmission lock 9
Truing up rim 34

U

Unit assembly numbers 59
Upholstery, care of 54
Use of accelerator before engine is warm 50
Use of jack 34

V

Vacuum tank, priming 15
Valve caps 31
Ventilators 24

W

Washing car 54
Wheel bearing grease 42
Windshield 23
Windshield cleaner 24
Winter lubrication 47
Winter operation 46
Wire wheel carrier 42

341-220
5000-11-28

1928 Shop Manual

Cadillac 341-A, 341-B.
LaSalle 303, 308.

Missing Pages
6, 18, 34, 40,
46, 62, 88, 94,
166

CADILLAC-LaSALLE SHOP MANUAL

Adjustments, Repairs and Lubrication



Cadillac 341-A, 341-B
LaSalle 303, 328

Book Number 5625

Please refer to the above number when writing us in regard to this Manual

Service Department
CADILLAC MOTOR CAR COMPANY
DETROIT

Foreword

THIS Shop Manual is a book of reference on the adjustment and repair of Cadillac and La Salle motor cars. It is intended for the use of service men who are already familiar with automobile construction and repairing in general. It is not a text book for those who have had no previous shop experience and does not aim to present instructions in elementary form.

The style in which the information is presented is a distinct departure from the usual book of this sort. Straight reading matter has been eliminated as far as possible and the facts and figures needed by service men are presented briefly in two ways—by illustrations and by tabulated specifications.

At the beginning of each group is a specification table giving clearances, dimensions and other facts important to service men. Explanations, where necessary, follow the specifications in the form of notes. The rest of the information is in picture form on the pages following the specification table.

Our service department invites correspondence with service managers and shop foremen on all matters discussed in the Shop Manual.

CADILLAC MOTOR CAR COMPANY
Detroit, Michigan

Copyright 1928 by
Cadillac Motor Car Company
Detroit

August, 1928

©CLAO 1999

Printed in U.S.A.

NOV - 7 1928

Contents

NOTE: The information contained in this book is grouped under the headings shown below. The table of specifications at the beginning of each group acts as an index for the information pertaining to that group.

Front Axle Page

Specifications 7, 8
Plate 1. Sectional view of Cadillac front wheel hub and steering knuckle 9
Plate 2. Sectional view of La Salle front wheel hub and steering knuckle 10
Plate 3. Front wheel alignment, camber and caster 11
Plate 4. Alignment of axle I-beam and steering knuckle arms 12

Rear Axle and Torsion Tube

Specifications 13, 14
Plate 5. Sectional view of Cadillac rear axle 15
Plate 6. Sectional view of La Salle rear axle 16
Plate 7. Torsion tube, drive shaft and axle housing 17

Body

For service information pertaining to bodies the reader is referred to the manual published by the Fisher Body Corporation, Detroit, Michigan.

Brakes

Specifications 19, 21
Plate 8. Adjustment of Cadillac 341-B brake connections 20
Plate 9. Adjustment of La Salle 328 brake connections 22
Plate 10. Adjustment of Cadillac 341-B front and rear foot brakes 23
Plate 11. Adjustment of La Salle 328 front and rear foot brakes 24
Plate 12. Cadillac 341-B and La Salle 328 hand brakes 25
Plate 13. Adjustment of Cadillac 341-A brake connections 26, 27
Plate 14. Adjustment of La Salle 303 brake connections 28, 29
Plate 15. Adjustment of Cadillac 341-A rear foot brakes 30
Plate 16. Adjustment of La Salle 303 rear foot brakes 31
Plate 17. Adjustment of La Salle 303 front brakes—first type 32
Plate 18. Adjustment of front brakes, Cadillac 341-A and La Salle 303 second type 33

Clutch

Specifications 35, 36
Plate 19. Sectional view of clutch 37
Plate 20. Adjustment of clutch pedal rod 38
Plate 21. Removal and disassembly of plate-type clutch 39

Cooling System

Specifications 41, 43, 44
Plate 22. Fan details 42
Plate 23. Cooling system details 45

Electrical

Specifications 47, 49, 51, 52
Plate 24. Generator details 48
Plate 25. Horn Adjustments 50
Plate 26. Sectional and top views of distributor 53
Plate 27. Ignition timing 54
Plate 28. Electrolock and dual ignition and transmission lock 55
Plate 29. Starting motor details 56
Plate 30. Circuit diagram, Cadillac 341-B 57
Plate 31. Circuit diagram, La Salle 328 58
Plate 32. Circuit diagram, Cadillac 341-A 59
Plate 33. Circuit diagram, La Salle 303—first type 60
Plate 34. Circuit diagram, La Salle 303—second type 61

Engine
Specifications 63, 65, 67, 69, 71, 72
Plate 35. Sectional view of engine 64
Plate 36. Water pump and generator drive 66
Plate 37. Connecting rod details 68
Plate 38. Indicating bearing clearance 70
Plate 39. Oil pump, pressure regulator and valves 73
Plate 40. Cylinder head, piston pin and engine rear support 74

Frame
Specifications 75
Plate 41. Diagrams of Cadillac and La Salle frames 76

Gasoline System
Specifications 77
Plate 42. Carburetor and adjustments 78
Plate 43. Vacuum tank, pump and check valve 79
Plate 44. General arrangement of gasoline systems 80

Lighting System
Specifications 81
Plate 45. Lighting system details 82

Lubrication
Specifications 83
Plate 46. Lubrication diagram, Cadillac 341-B 84
Plate 47. Lubrication diagram, La Salle 328 85
Plate 48. Chassis lubrication diagram, Cadillac 341-A 86
Plate 49. Chassis lubrication diagram, La Salle 303 87

Springs
Specifications 89
Plate 50. Cadillac and La Salle spring shackles 90

Steering Gear
Specifications 91
Plate 51. Steering gear details 92
Plate 52. Steering gear adjustments and steering connections 93

Transmission
Specifications 95, 97, 99
Plate 53. Sectional view of transmission, Cadillac 341-B and La Salle 328 96
Plate 54. Transmission synchronizing mechanism 98
Plate 55. Diagrams showing operation of synchronizing mechanism. (Neutral to intermediate) 100
Plate 56. Dash pot operation and drum clearances 101
Plate 57. Diagrams showing operation of synchronizing mechanism. (Neutral to direct drive) 102
Plate 58. Sectional view of Cadillac 341-A transmission 103
Plate 59. Sectional view of La Salle 303 transmission 104
Plate 60. Removal of transmission and universal joint 105

Wheels, Rims and Tires
Specifications 107
Plate 61. Cadillac and La Salle wheel bearings 108

Introduction

Arrangements of Tables

THE subjects covered in the specification tables are listed in alphabetical order in the first column, and the corresponding facts or figures in the column under "Specifications." Under "Remarks" will be found important comments, cautions and references to illustrations and notes.

In cases where a change in construction has been made and the same information does not apply to all cars of the same model, small figures "1" and "2" are used following the model number or letter to designate first and second type construction. Thus, La Salle cars with the first type or cam-operated brakes, are designated as "303[1]" and cars used with second type or toggle brakes as "303[2]". The unit number at which the change was made is given under "Remarks."

One class of information in the specifications consists of limits for the clearance between parts subject to wear. The limits given are of two kinds. "New limits" are those to be observed in replacing worn parts with new parts. "Worn limits" are those beyond which it is inadvisable to continue to use the worn parts if quietness of operation and maximum performance are expected. Some service, although not the most satisfactory, can of course be obtained from parts worn beyond these limits.

Arrangement of Illustrations

The illustrated pages are laid out to show as far as possible in picture form the repair operations, together with the differences and similarities of the various car units.

Unless otherwise specified all illustrations apply to both the Cadillac and the La Salle.

Identification Numbers

EACH Cadillac and La Salle car when shipped carries an engine number which is also a car serial number. This is the number to be used in filling out license and insurance applications and in general reference to the car. The engine number is stamped on the car in two places: On the name plate on the front face of the left side of the dash and on the crankcase just below the water inlet on the right-hand side.

The various units such as the engine, transmission, steering gear, etc., also carry unit assembly numbers. These are located as described in the specification tables. It is important in ordering parts to give, not only the engine number of the car, but also the unit assembly number of the unit to which the part belongs.

Front Axle

Subject	Cadillac 341		LaSalle 303-328		Specifications	Remarks
Camber of front wheel (angle with vertical)	A	B	303	328	2½°	*Plate 3, Fig. 7*
Angle between steering knuckle bolt and vertical	A	B	....	....	5°	
	....	....	303	328	7½°	
Angle between steering knuckle bolt and wheel spindle	A	B	....	....	97½°	
	....	....	303	328	100°	
Caster angle	A	B	303	328	2½°-3°	See Note 1. *Plate 3, Fig. 6.*
Angle between spring seat and vertical plane of I-beam	A[1]	....	....	....	2½°-3°	Before front axle unit 3-2858
	....	....	303[1]	....	0°	Before front axle unit 2-16018
	A[2]	B	....	....	1°-1½°	Beginning with front axle unit 3-2858 on 341-A cars. *Plate 4, Fig. 5*
	....	....	303[2]	328	1¼°-1¾°	Beginning with front axle unit 2-16018 on 303 cars. *Plate 4, Fig 6.*
Correct installation of I-beam (identification mark)	A	B	....	....	"F" on front face of I-beam	
	....	....	303	328	"F" on right spring pad	
I-beam twist (misalignment between steering knuckle bolts)	A	B	303	328	½° allowable variation between ends	See note 2.
Clearance between steering knuckle bolt and bushing	A	B	....	....	New limits, .0015-.0025 in. Worn limit, not over .005 in	
	....	....	303	328	New limits, .0005-.0025 in. Worn limit, not over .005 in.	
Pivot balls, out of round	A	B	303	328	Worn limit, not over .010 in.	
Road clearance under front axle	A	B	....	....	$8\frac{7}{16}$ inch	
	....	....	303	328	$9\frac{3}{16}$ inch	
Steering cross rod adjustment	....	....	303[1]	....	Tighten and back off one cotter pin hole	Before front axle unit 2-16001. *Plate 3, Fig. 4*
	A	B	303[2]	328	Automatic adjustment	Beginning with front axle unit 2-16001 on 303 cars. *Plate 3, Fig. 3-5.*
Steering knuckle thrust bearing adjustment	A	B	....	....	Tighten and back off just enough to free adjustment	Tapered roller bearing. Tighten dust-cap securely against roller bearing. *Plate 1,*
	....	....	303	328	Not over .004 in. end play	Ball bearing. Adjust with shims .003 and .005 in. thick. *Plate 2.*
Stop screw adjustment	A	B	303	328	½-¾ in. clearance between tire and nearest point of possible interference.	Interference with steering connecting rod on left side and spring on right side. Also shock absorber brackets.
Toe-in of front wheels	....	....	303[1]	....	⅛ in. preferable, ¼ in. maximum.	Adjust by spacers $\frac{1}{16}$ in. and $\frac{1}{32}$ in. thick. Before front axle unit 2-16001. *Plate 3, Figs. 1-2-4.*
	A	B	303[2]	328	⅛ in. preferable, ¼ in. maximum.	Adjust by turning steering cross rod. Beginning with front axle unit 2-16001 on 303 cars. *Plate 3, Figs. 1-2-3-5*

Subject	Cadillac 341		LaSalle 303-328		Specifications	Remarks
Tread	A	B	303	328	56 in.	
Unit number, location of	A	B	303	328	Top right on I-beam	

1. Caster Angle

To measure the caster angle, use a Bear or Duby Gauge as shown in Plate 3, Figs. 8, 11. Be sure to have all four wheels the same distance off the floor. Floor must be level.

On early 341-A and 303 cars, the spring seats are not machined at the same angle as on later cars. To give these cars the standard caster angle specified in the table, use tapered shims (Fig. 9) between the springs and the axle. Place the thick edges of the shims toward the rear.

2. Straightening Bent Parts

Because of their location the parts of the front axle are more subject to damage by accident than any other part of the chassis. Front axle service, therefore, involves the inspection of parts for alignment and possible straightening.

Heat-treated parts should not be straightened if they are sprung out of alignment more than 5°. To straighten such parts while cold is likely to result in strains and sometimes in cracks not visible to the naked eye. Straightening with heat destroys the effect of previous heat treatment and may result either in overheating, making the steel soft and weak, or in underheating, which will make it brittle and easily broken.

Parts which are not heat-treated may be straightened cold if not sprung out of alignment more than 10°.

Welding of parts subjected to severe strain should never be permitted. A welded part is never as strong as the original, unbroken metal and the heat required for the welding process changes the structure of the metal around the weld, making it coarse and weak.

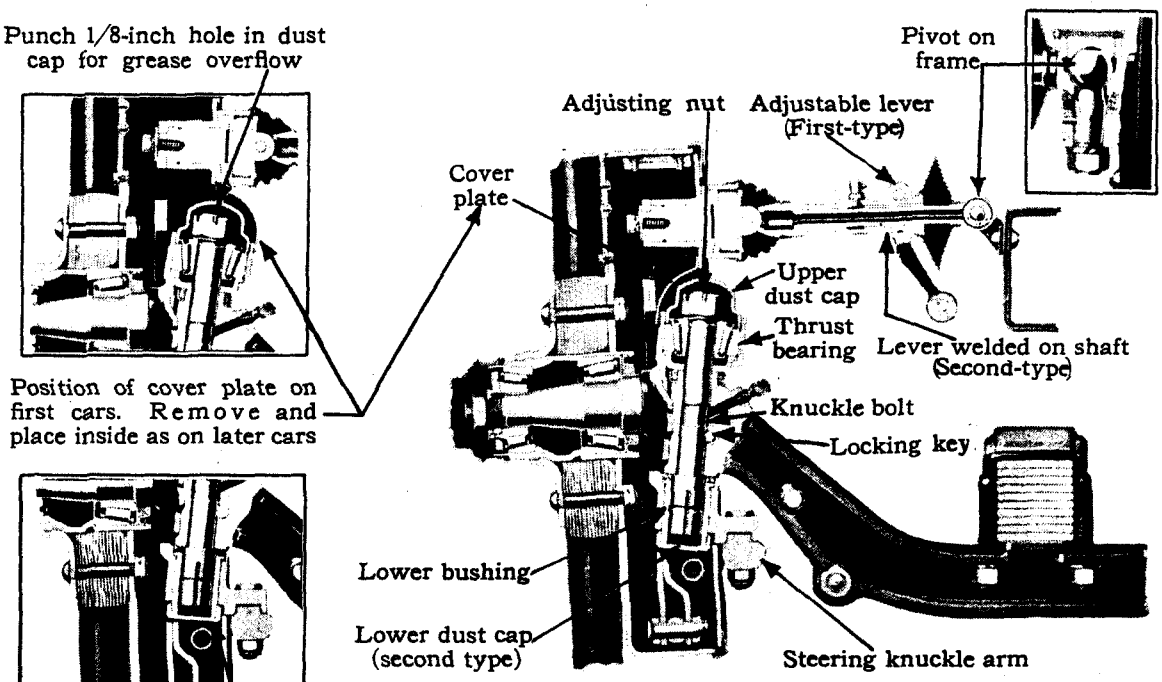

Fig. 1
Cadillac 341-A

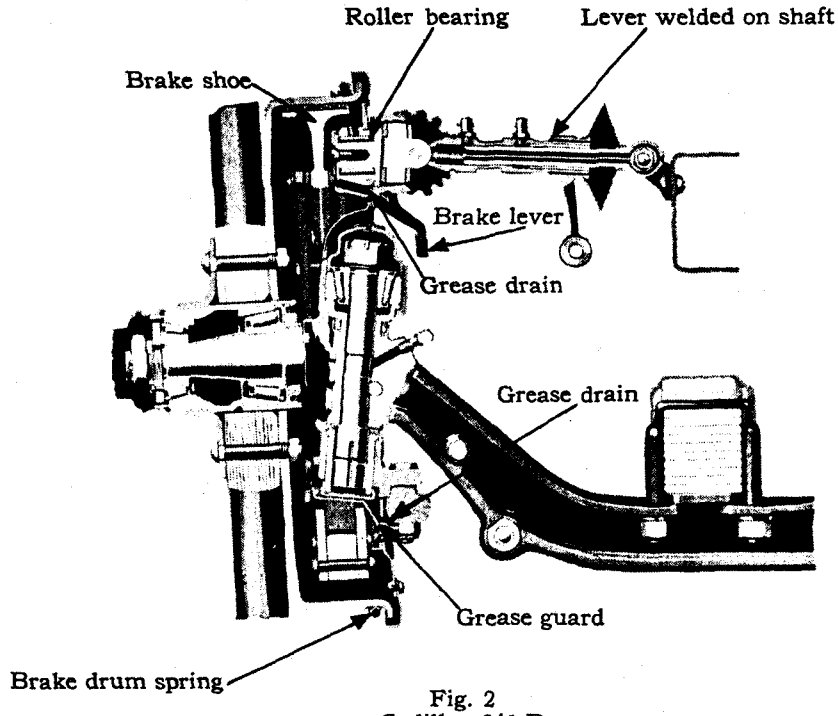

Fig. 2
Cadillac 341-B

Plate 1. Sectional view of Cadillac front wheel hub and steering knuckle.

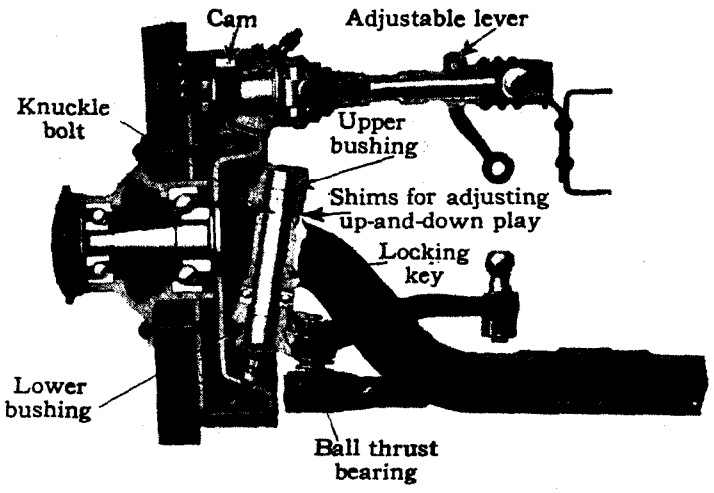

Fig. 1
LaSalle 303
(first type with cam-operated brakes)

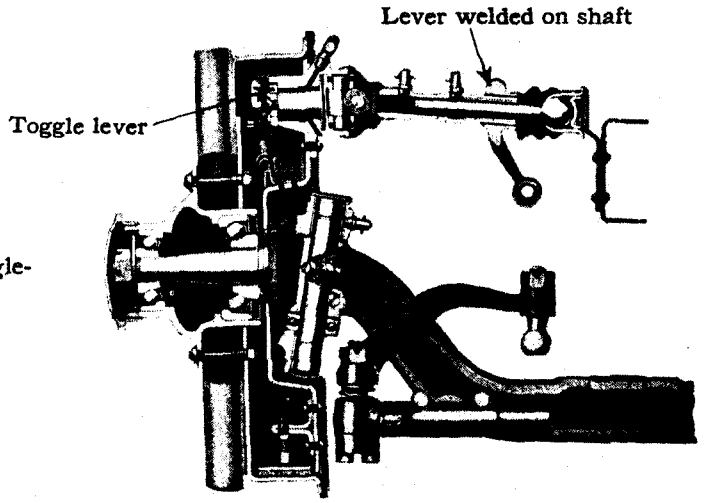

Fig. 2
LaSalle 303
(second type with toggle-operated brakes)

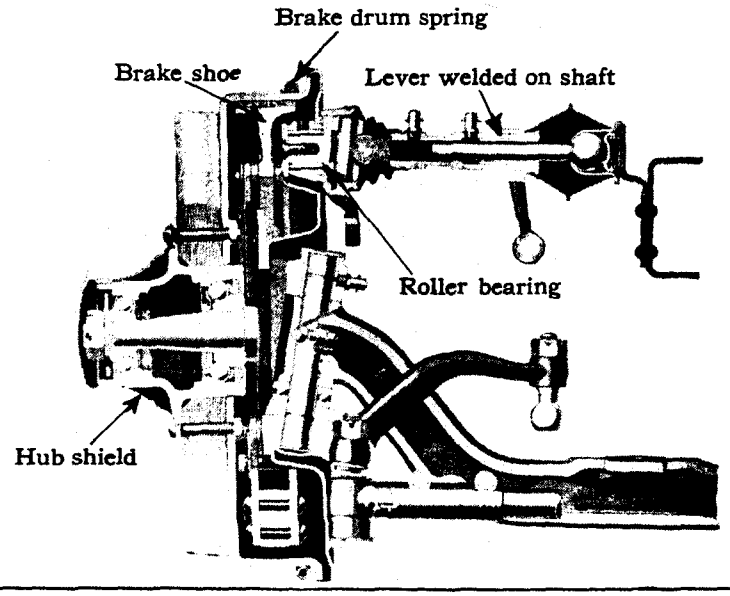

Fig. 3
LaSalle 328

Plate 2. Sectional view of La Salle front wheel hub and steering knuckle.

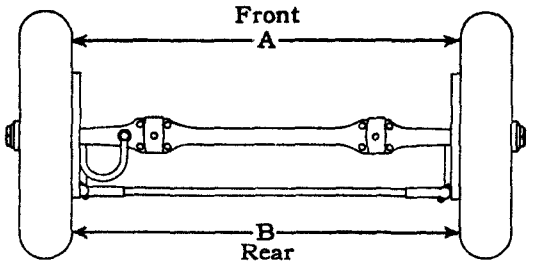

Fig. 1
Front wheel alignment.
A should be 1/8 to 1/4 inch less than B

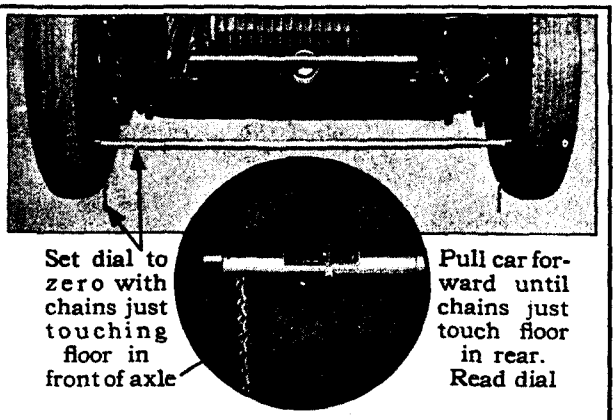

Fig. 2
Front wheel alignment gauge

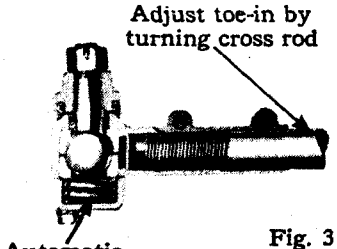

Fig. 3
Steering cross rod joint
Cadillac 341-A and B

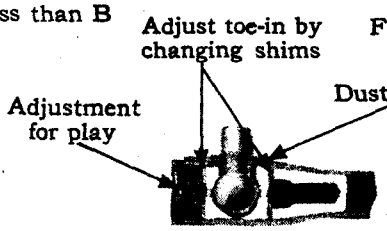

Fig. 4
Steering cross rod joint
LaSalle 303 (first type)

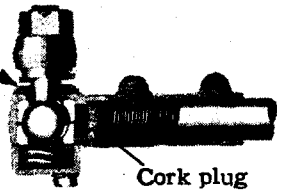

Fig. 5
Steering cross rod joint
LaSalle 303 (second type) and 328

Fig. 6

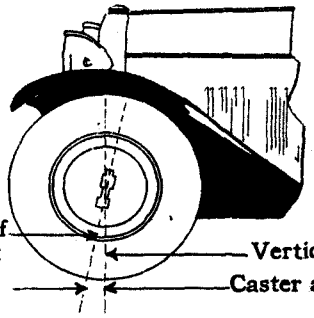

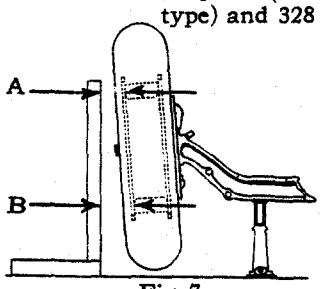

Fig. 7
Front wheel camber.
A should be 3/4 inch less than B

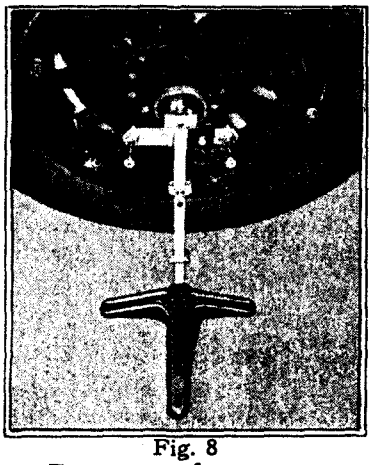

Fig. 8
Bear gauge for measuring caster angle

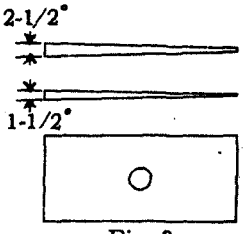

Fig. 9
Wedges for changing caster angle

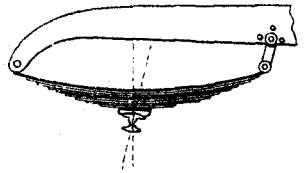

Fig. 10
To increase caster, insert wedges with thick edge toward rear

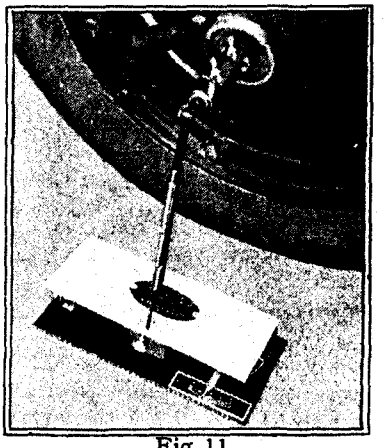

Fig. 11
Duby gauge for measuring caster and camber

Plate 3. Front Wheel Alignment, Camber and Caster.

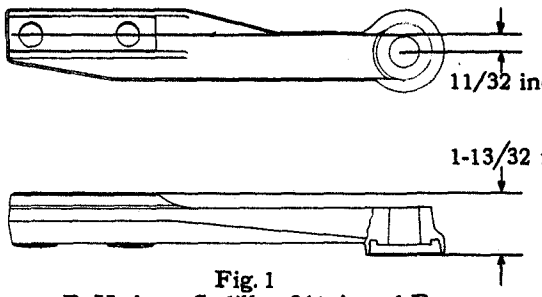

Fig. 1
R. H. Arm, Cadillac 341-A and B

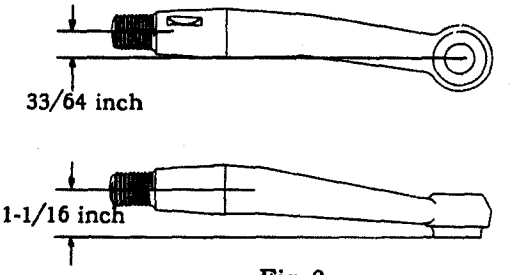

Fig. 2
R. H. Arm, LaSalle 303 and 328

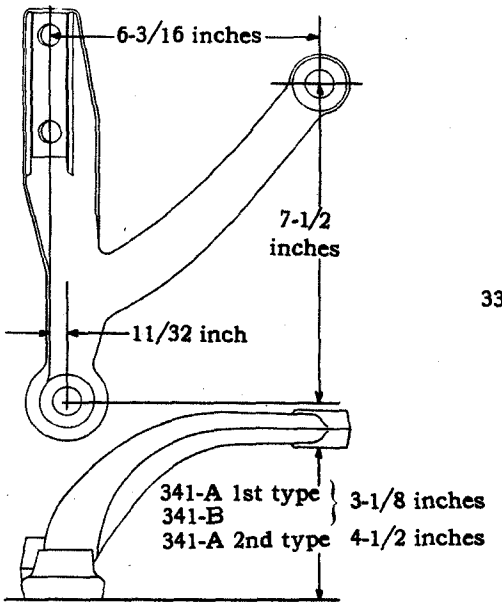

Fig. 3
L. H. Arm, Cadillac 341-A and B

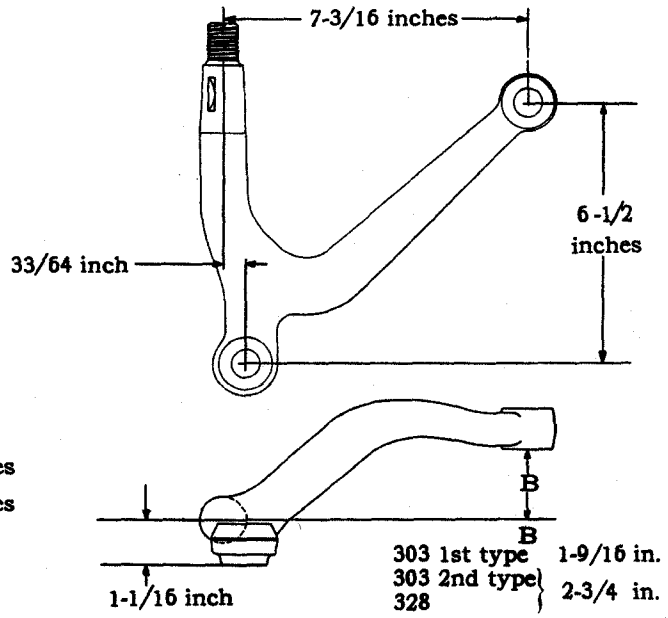

Fig. 4
L. H. Arm, LaSalle 303 and 328

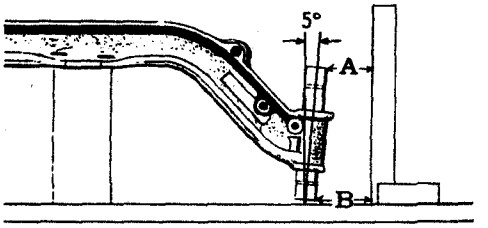

Fig. 5
Axle I-beam, Cadillac
A should be 1 inch
less than B
C should be 1/2 inch
less than D

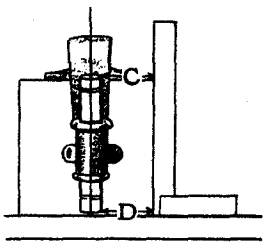

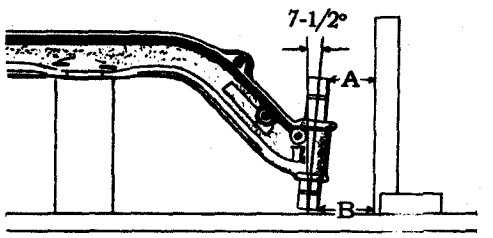

Fig. 6
Axle I-beam, LaSalle
A should be 55/64 inch
less than B
The dimensions C and
D should be equal

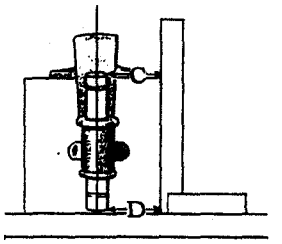

Plate 4. Alignment of axle I-beam and steering knuckle arms.

Rear Axle and Torsion Tube

Subject	Cadillac 341		LaSalle 303-328		Specifications	Remarks
Axle shaft, clearance between driver and recesses in wheel hub	A	B	....	....	New limits, .0005-.0025 in. Worn limit, not over .005 in.	
Axle shaft length, left side	A	B	....	....	30 11/16 in. overall	
	....	....	303	....	31 11/16 in. overall	
	....	....	....	328	32 5/8 in. overall	
Axle shaft length, right side	A	B	....	....	33 7/16 in. overall	
	....	....	303	....	34 5/16 in. overall	
	....	....	....	328	35 1/4 in. overall	
Axle shaft, out of true	A	B	303	328	Not over 1/32 inch	
Axle housing, out of true	A	B	303	328	Not over 3/32 inch	Ideal gauge, Tool 102789, can be used to check alignment of rear wheels as well as front wheels. *Plate 7, Fig. 4.*
Differential carrier, installation of	A	B	303	328	....	See Note 1
Drive shaft, clearance between sleeve and splines on pinion shaft	A	B	303	328	New limits, .000-.003 in. Worn limit, not over .006 in.	
Driveshaft, clearance between splines and hub of universal joint	A	B	303	328	New limits, .001-.005 in. Worn limit, not over .006 in.	
Driveshaft, length	A	....	....	....	140 in. wheelbase—61 1/4 in.	
					152 in. wheelbase—73 1/4 in.	
	....	....	303	....	125 in. wheelbase—50 7/8 in.	
					134 in. wheelbase—59 7/8 in.	
	....	B	....	....	140 in. wheelbase—62 11/64 in.	
					152 in. wheelbase—74 11/64 in.	
	....	....	....	328	125 in. wheelbase—49 1/8 in.	
					134 in. wheelbase—58 1/8 in.	
Driveshaft, out of true	A	B	303	328	Not over .010 in.	
Gear ratio, high	A	B	....	....	4.39:1	
	....	....	303	328	4.07:1	
Gear ratio, medium	A	B	....	....	4.75:1	Stamped on top of differential carrier.
	....	....	303	328	4.54:1	
Gear ratio, low	A	B	....	....	5.08:1	
	....	....	303	328	4.91:1	
Gear adjustment or replacement	A	B	303	328	....	See Note 2.
Lubrication	A	B	303	328	....	See Lubrication Table, page 83.
Removal of rear axle and torsion tube assembly	A	B	303	328	....	See Note 3.
Road clearance under rear axle	A	B	....	....	8 7/16 inch	At center under differential.
	....	....	303	328	7 13/16 inch	
Tread	....	....	303	....	56 inches	
	A	B	....	328	58 inches	
Type of axle	A	B	....	....	Full floating	
	....	....	303	328	Three-quarter floating	
Unit number, location of	A	B	303	328	Rear surface of housing, right side	

1. Lubrication of Pinion Bearings

Differential carrier assemblies shipped by the Parts Division have no lubricant in the bearings, as all the lubricant is washed out before the assemblies are shipped.

Before an assembly is installed in a car, it is important that care be taken to see that the lubricant reaches the front pinion bearing. It is not enough simply to install the assembly and add lubricant to the proper level. Before the lubricant has a chance to work up into the pinion bearing the bearing may be damaged.

The best plan is to stand the assembly up on the front end and pour in enough lubricant to make sure that the ball bearings are thoroughly lubricated. The assembly can then be installed and the necessary additional lubricant added to bring up the level. In this way lubrication of the ball bearings is provided for until the oil in the housing works up through the bearings.

2. Gear Adjustment

The rear axle gears are correctly adjusted when the axle is assembled, and their positions must not be changed. If the gear and pinion require replacement, the entire differential carrier assembly should be replaced. Differential carrier assemblies for replacement can be obtained from the Factory Parts Department on an exchange basis.

It is very important that every assembly returned to the factory be accompanied by the original shims.

3. Removal of Rear Axle and Torsion Tube

It is customary for work on the rear axle to remove the axle and torsion tube as an assembly by disconnecting the torsion tube from the ball-and-socket joint and removing the spring clips. On 341 Cadillac cars the rear ends of the rear springs must also be disconnected because the springs are underslung.

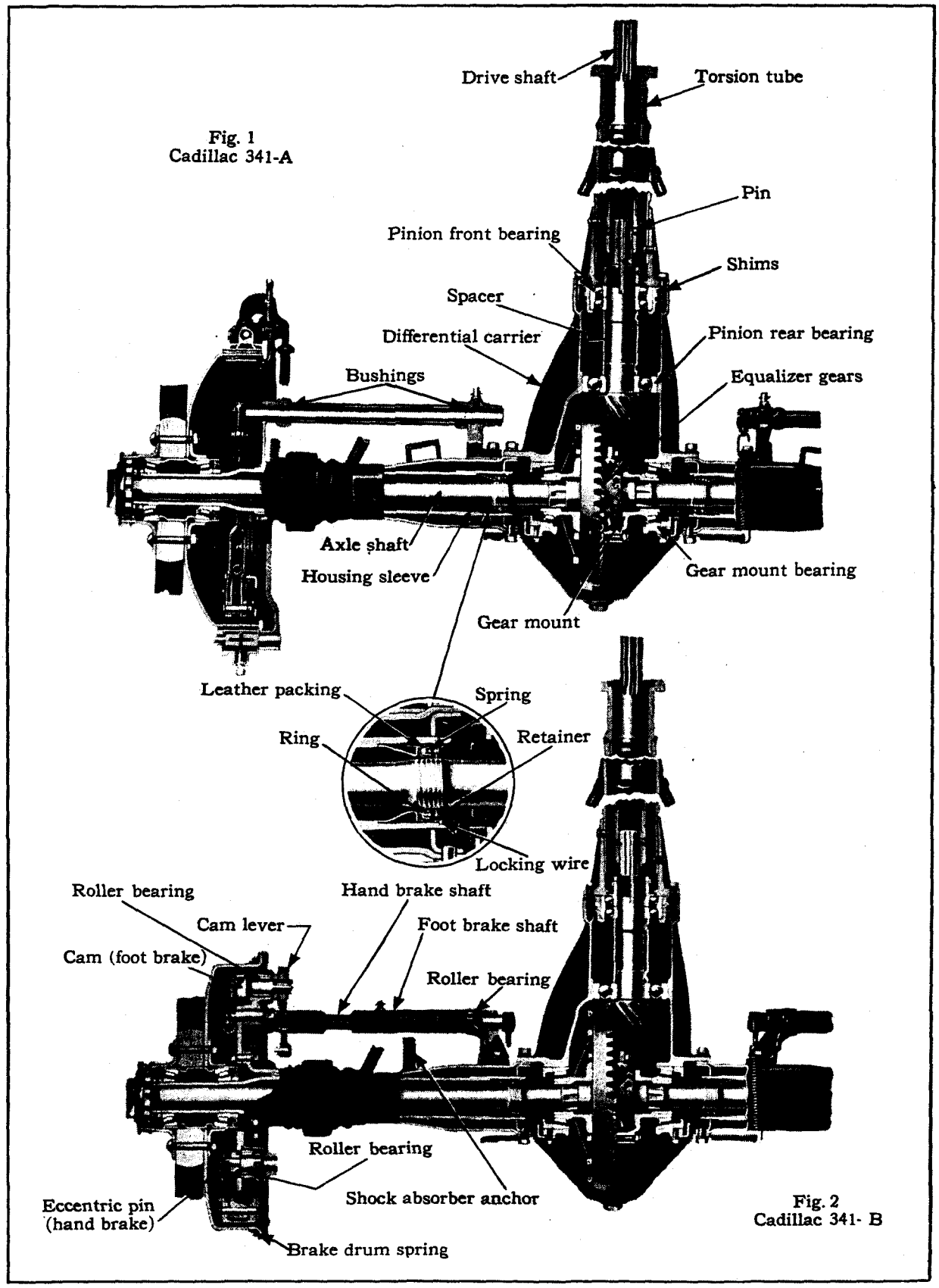

Plate 5. Sectional View of Cadillac Rear Axle.

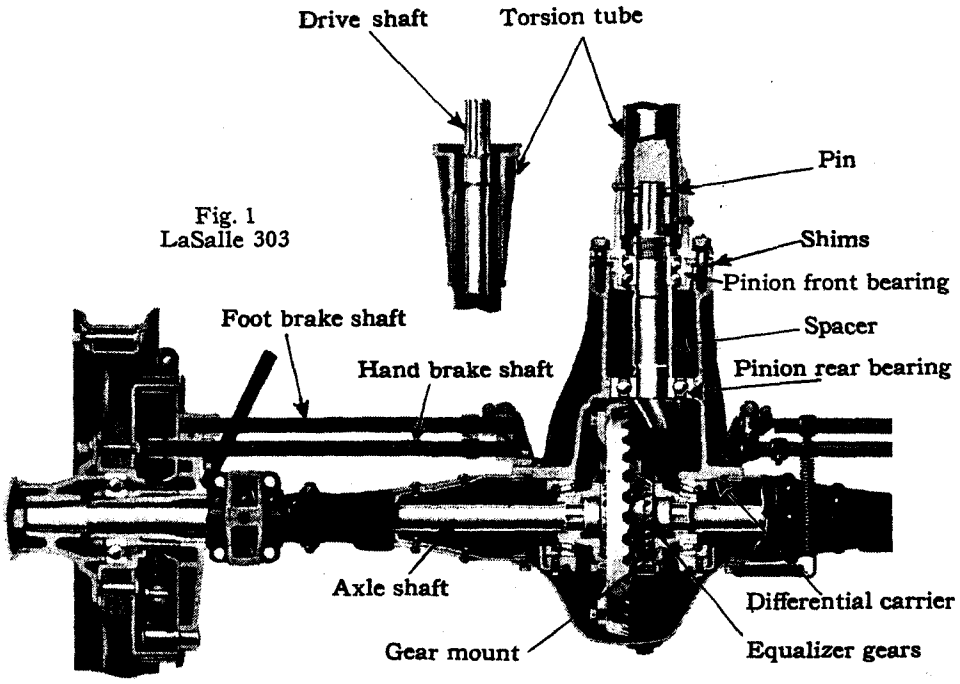

Fig. 1
LaSalle 303

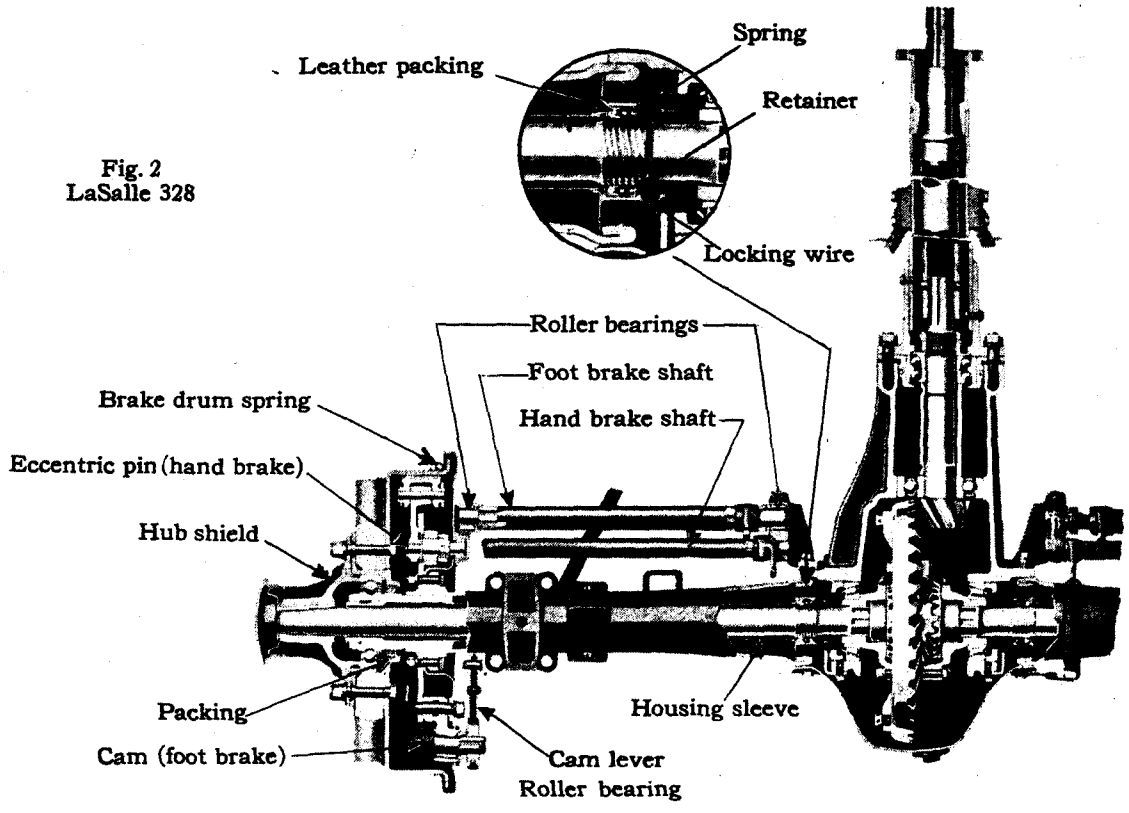

Fig. 2
LaSalle 328

Plate 6. Sectional View of La Salle Rear Axle.

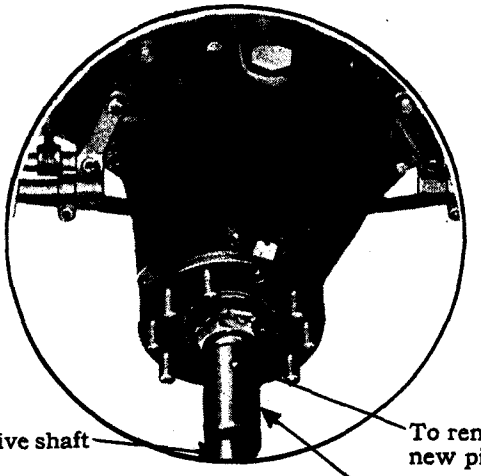

Fig. 1
Rear end of drive shaft

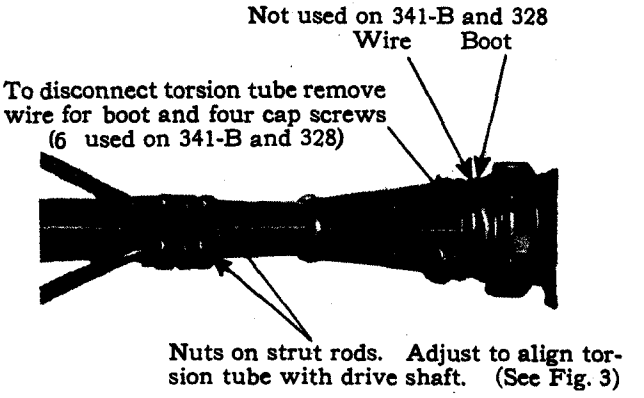

Fig. 2
Front end of torsion tube

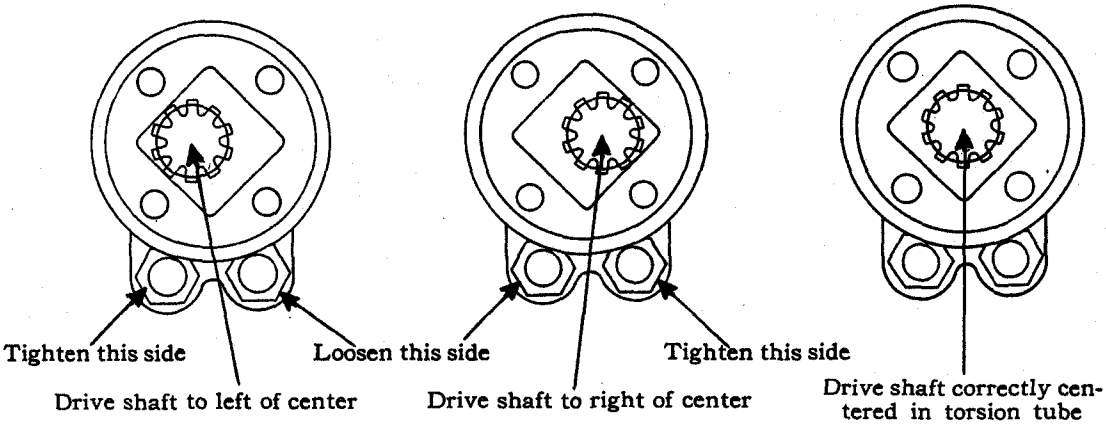

Fig. 3
Alignment of drive shaft.
Rear axle and torsion tube removed, torsion tube pointing straight up

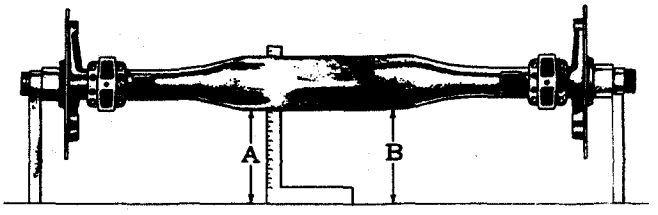

A and B when rear face of housing is down must equal A and B when front face is down

Fig. 4
Rear axle housing on V-blocks for testing

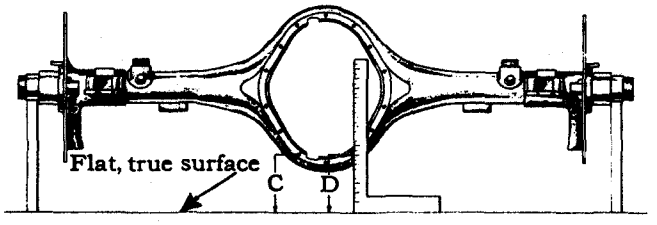

C and D when housing is right side up must equal C and D when housing is upside down

Plate 7. Torsion tube, drive shaft and axle housing.

Brakes

Subject	Cadillac 341		LaSalle 303-328		Specifications		Remarks
FOOT BRAKES							
FRONT AND REAR (Shoe type)							
Clearance between lining and drum	...	B	....	328	.....		Clearance determined by number of turns of adjusting nut. *Plates 10, 11. Figs 2, 4.*
Drum, nominal inside diameter	...	B	....	....	16½ in., front and rear		
	...	...	....	328	15 in., front and rear		
Drum, out of round	...	B	....	328	Not over .007 in.		
Drum, thickness	...	B	....	328	¼ in.		
Lining, length—					Short Shoe	Long Shoe	
Front	...	B	....	....	7⅛ in.	16¾ in.	
	...	...	....	328	6$\frac{11}{32}$ in.	15⅜ in.	
Rear	...	B	....	....	7⅛ in.	16¾ in.	
	...	...	....	328	6$\frac{11}{32}$ in.	15⅜ in.	
Lining, thickness	...	B	....	328	$\frac{3}{16}$ in.		
Lining, width	...	B	....	....	2¼ in.		
	...	...	....	328	2 in.		
Pull back spring for rear brake, free length	...	B	....	....	4¾ in., approximately		
	...	...	....	328	4¼ in., approximately		
Pull back spring for rear brake, tension	...	B	....	....	32—37 lbs. stretched to 7¾ in. between loops		
	...	...	....	328	19—24 lbs. stretched to 6½ in. between loops		
FRONT (Band type)							
Clearance between lining and drum	A	...	303	....	.015 in.		
Drum, nominal outside diameter	A[1]	...	....	....	16 in.		Before front axle unit 3-6001.
	A[2]	...	....	....	17 in.		Beginning with front axle unit 3-6001.
	...	...	303[1]	....	14 in.		Before front axle unit 2-16608.
	...	...	303[2]	....	16 in.		Beginning with front axle unit 2-16608.
Drum, out of round	A	...	303	....	Not over .015 in.		
Drum, thickness	A	...	....	....	$\frac{13}{64}$ in.		
	...	...	303	....	$\frac{3}{16}$ in.		
Lining, length	A[1]	...	....	....	41¾ in., approximately		Before front axle unit 3-6001 See note 1.
	A[2]	...	....	....	45¾ in., approximately		Beginning with front axle unit 3-6001. See note 1.
	...	...	303[1]	....	36⅞ in., approximately		Before front axle unit 2-16608. See note 1.
	...	...	303[2]	....	41½ in., approximately		Beginning with front axle unit 2-16608. See note 1.
Lining, thickness	A	...	303	....	$\frac{3}{16}$ in.		
Lining, width	A	...	....	....	2¼ in.		
	...	...	303	....	2 in.		
REAR (Band type)							
Clearance between lining and drum	A	...	303	....	.030 in.		

Note: Adjustment of connections, when necessary, should precede adjustment of shoes. Make all adjustments of connections in released position

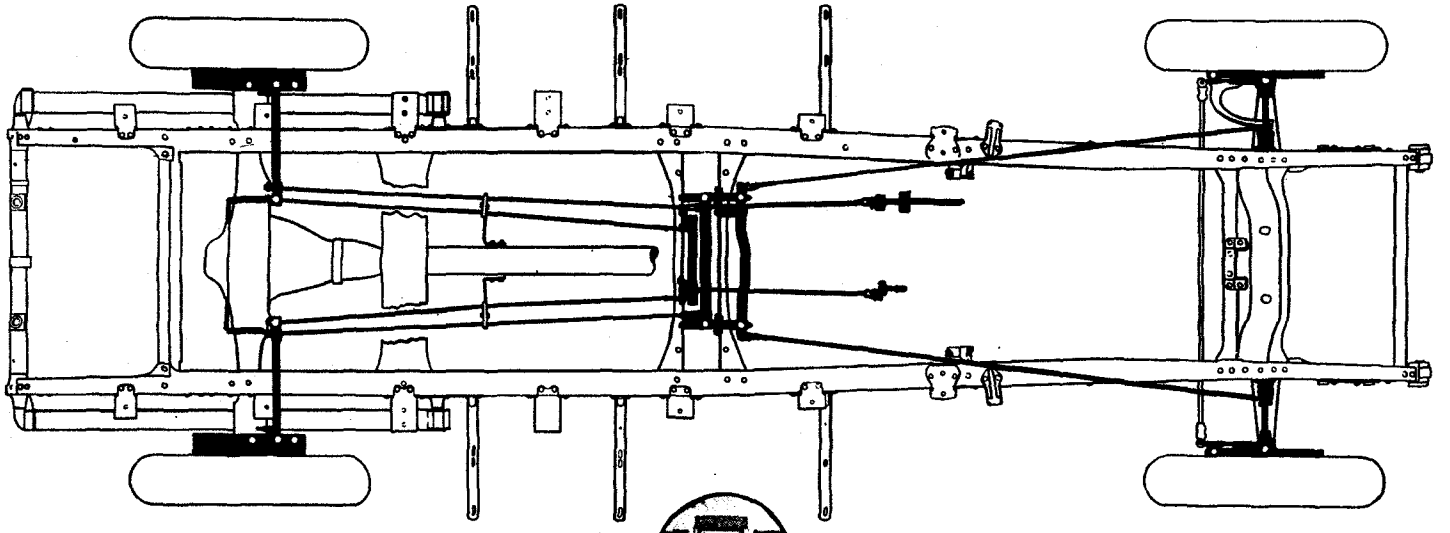

Roller bearings of this type are used at all places indicated by white circles

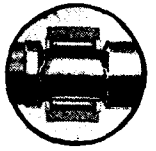

Plate 8. Adjustment of Cadillac 341-B brake connections.

Subject	Cadillac 341		LaSalle 303-328		Specifications	Remarks
Drum, nominal outside diameter	A	...	....	....	16 in.	
	...	...	303	....	14 in.	
Drum, out of round	A	...	303	....	Not over .015 in.	
Drum, thickness	A	...	....	....	$\frac{11}{64}$ in.	
	...	...	303	....	$\frac{3}{16}$ in.	
Lining, length	A	...	....	....	49½ in., approximately	See note 1.
	...	...	303	....	39 in., approximately	
Lining, thickness	A	...	303	....	$\frac{3}{16}$ in.	
Lining, width	A[1]	...	....	....	2½ in.	Before rear axle unit 3-12529.
	A[2]	...	....	....	2¼ in.	Beginning with rear axle unit 3-12529.
	...	...	303	....	2 in.	
Pull back spring for rear brake rod, free length	A	...	303	....	4¼ in., approximately	
Pull back spring for rear brake rod, tension	A	...	303	....	19-24 lbs. stretched to 6½ in. between loops	
HAND BRAKES						
Clearance between rocker shaft and bushings	A	B	303	328	New limits .004 to .008 in. Worn limit, not over .012 in.	
Lining, length	A	...	....	....	40⅜ in., approximately	See note 1.
	...	...	303	....	40$\frac{11}{16}$ in., approximately	
	...	B	....	....	10$\frac{5}{16}$ in.	
	...	...	....	328	9⅛ in.	
Lining, thickness	A	B	....	328	$\frac{3}{16}$ in.	
	...	...	303	....	$\frac{5}{32}$ in.	
Lining, width	A	...	....	328	2 in.	
	...	...	303	....	1⅝ in.	
	...	B	....	....	2¼ in.	

1. Length of Lining

The lengths given for the lining on 341-A and 303 cars allow for cutting to length to suit each individual band. The most economical method is to purchase lining in rolls and cut to length when installing. Lining for external bands should be cut $\frac{3}{16}$ in. longer than the band. Lining for internal bands should be cut $\frac{3}{16}$ in. shorter than the band.

Note: Adjustment of connections, when necessary, should precede adjustment of shoes. Make all adjustments of connections in released position

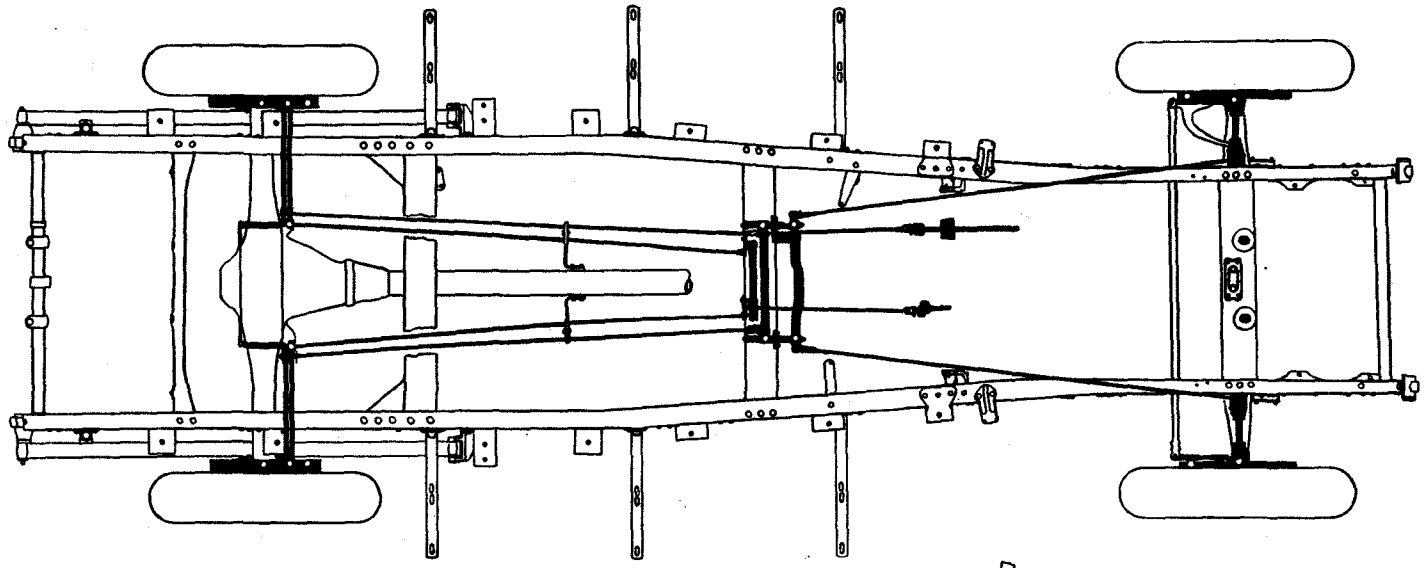

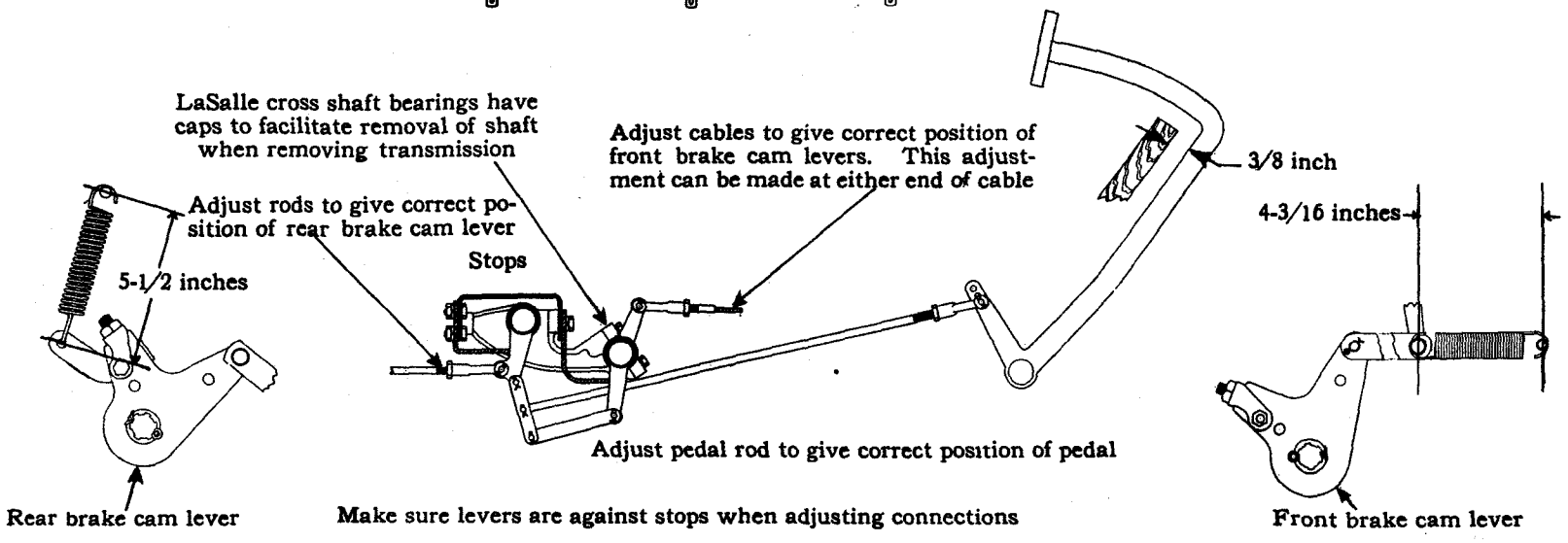

Plate 9. Adjustment of La Salle 328 brake connections.

Note: Unless brake connections are known to be O. K., check them as shown in Plate 8 before proceeding with shoe adjustments

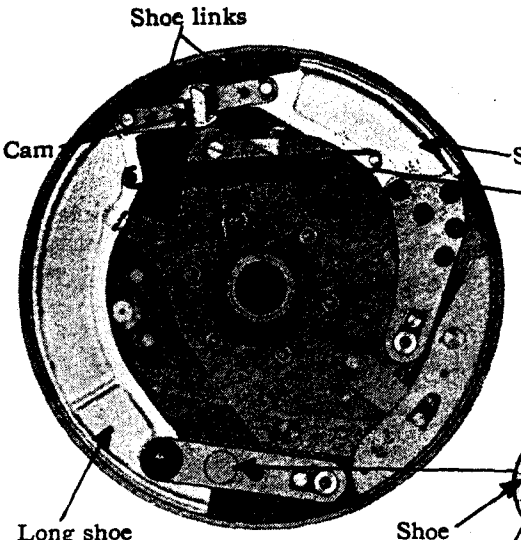

Fig. 1
Rear foot brake

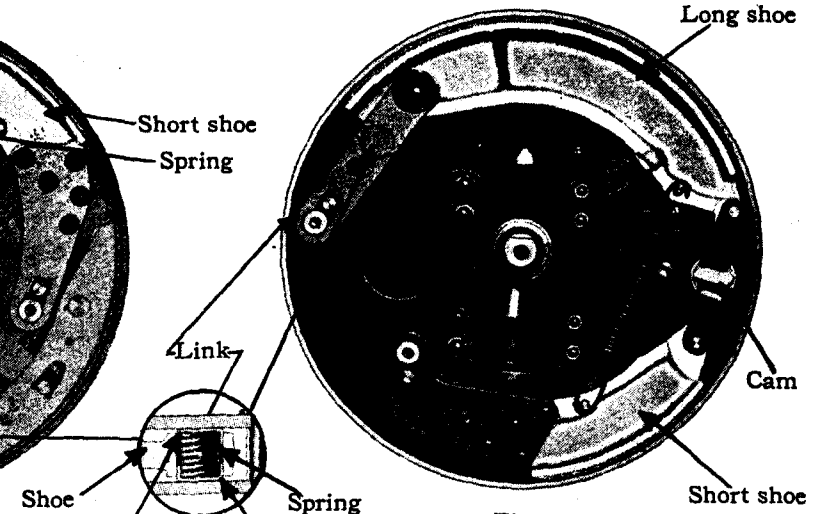

Fig. 3
Front brake

Loosen nut and apply brakes firmly to centralize cam bracket. Tighten nut before releasing brakes. (See Fig. 7 for cam bracket)

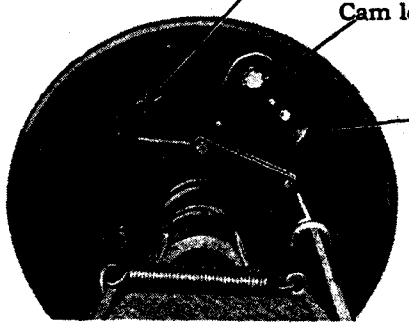

Fig. 2
Rear brake adjustment

Check for equalization between right and left. If O. K., turn down all four adjusting nuts same number of turns until pedal travel is approximately 2-1/4 inches. (1-1/6 turns equals 1 inch pedal travel)

If equalization is not O. K., first turn down nuts until all four wheels just drag; then back off nuts same number of turns to give proper pedal travel. Recheck for equalization and make further adjustment if necessary

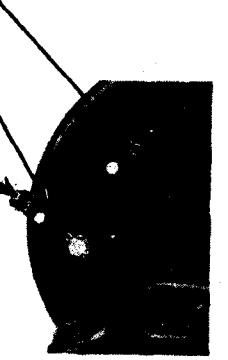

Fig. 4
Front brake adjustment

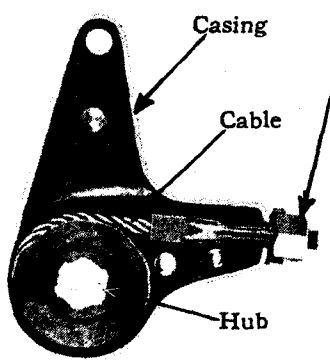

Fig. 5
Cam lever with half of casing removed

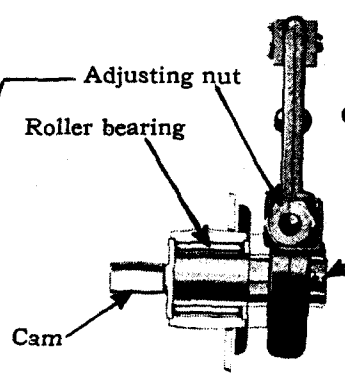

Fig. 6
Sectional view of cam shaft bearing

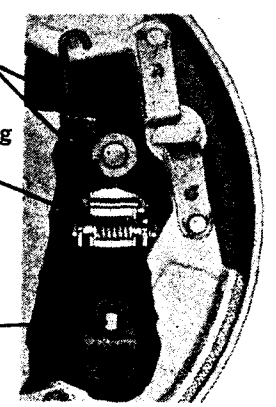

Fig. 7
Sectional view of cam centralizing bracket

Plate 10. Adjustment of Cadillac 341-B front and rear foot brakes.

Note: Unless brake connections are known to be O. K., check them as shown in Plate 9 before proceeding with shoe adjustments

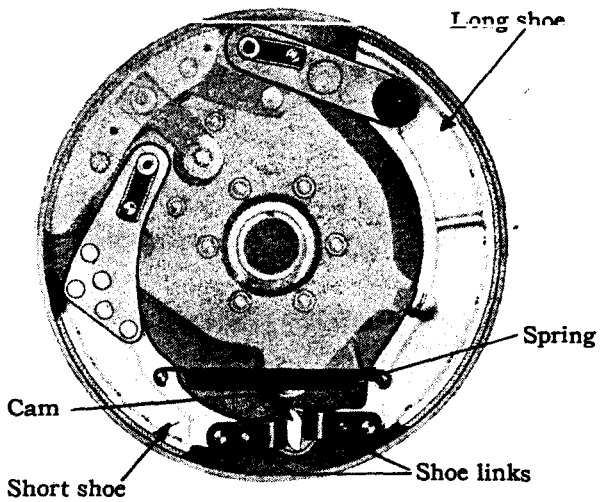

Fig. 1
Rear foot brake

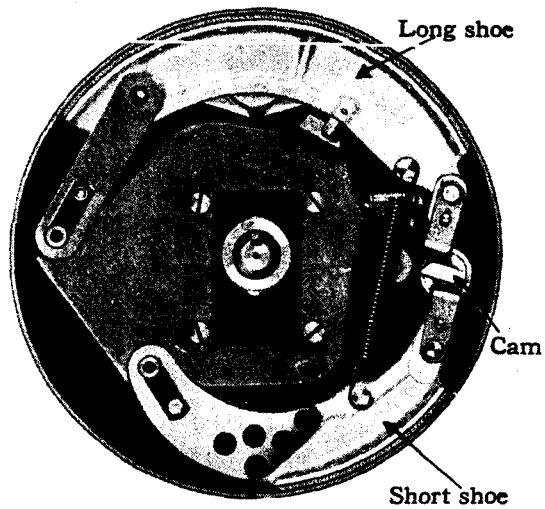

Fig. 3
Front brake

Loosen nut and apply brakes firmly to centralize cam bracket. Tighten nut before releasing brakes. (See Fig. 7 for cam bracket)

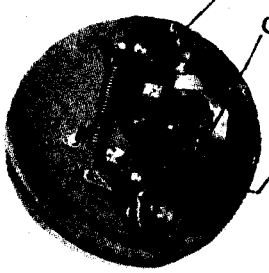

Fig. 2
Rear brake adjustment

Check for equalization between right and left. If O. K., turn down all four adjusting nuts same number of turns until pedal travel is approximately 2-1/4 inches. (1-1/6 turns equals 1 inch pedal travel)

If equalization is not O. K., first turn down nuts until all four wheels just drag; then back off nuts same number of turns to give proper pedal travel. Recheck for equalization and make further adjustment if necessary

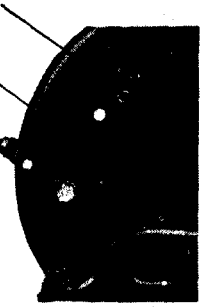

Fig. 4
Front brake adjustment

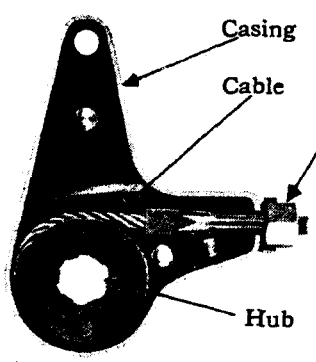

Fig. 5
Cam lever with half of casing removed

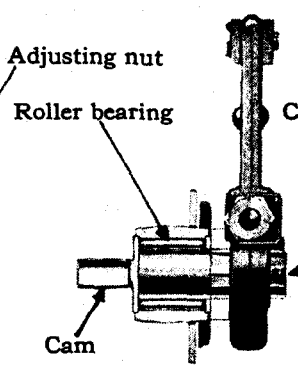

Fig. 6
Sectional view of cam shaft bearing

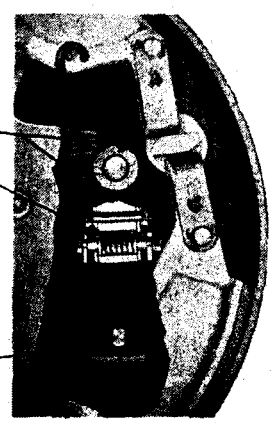

Fig. 7
Sectional view of cam centralizing bracket

Plate 11. Adjustment of La Salle 328 front and rear foot brakes.

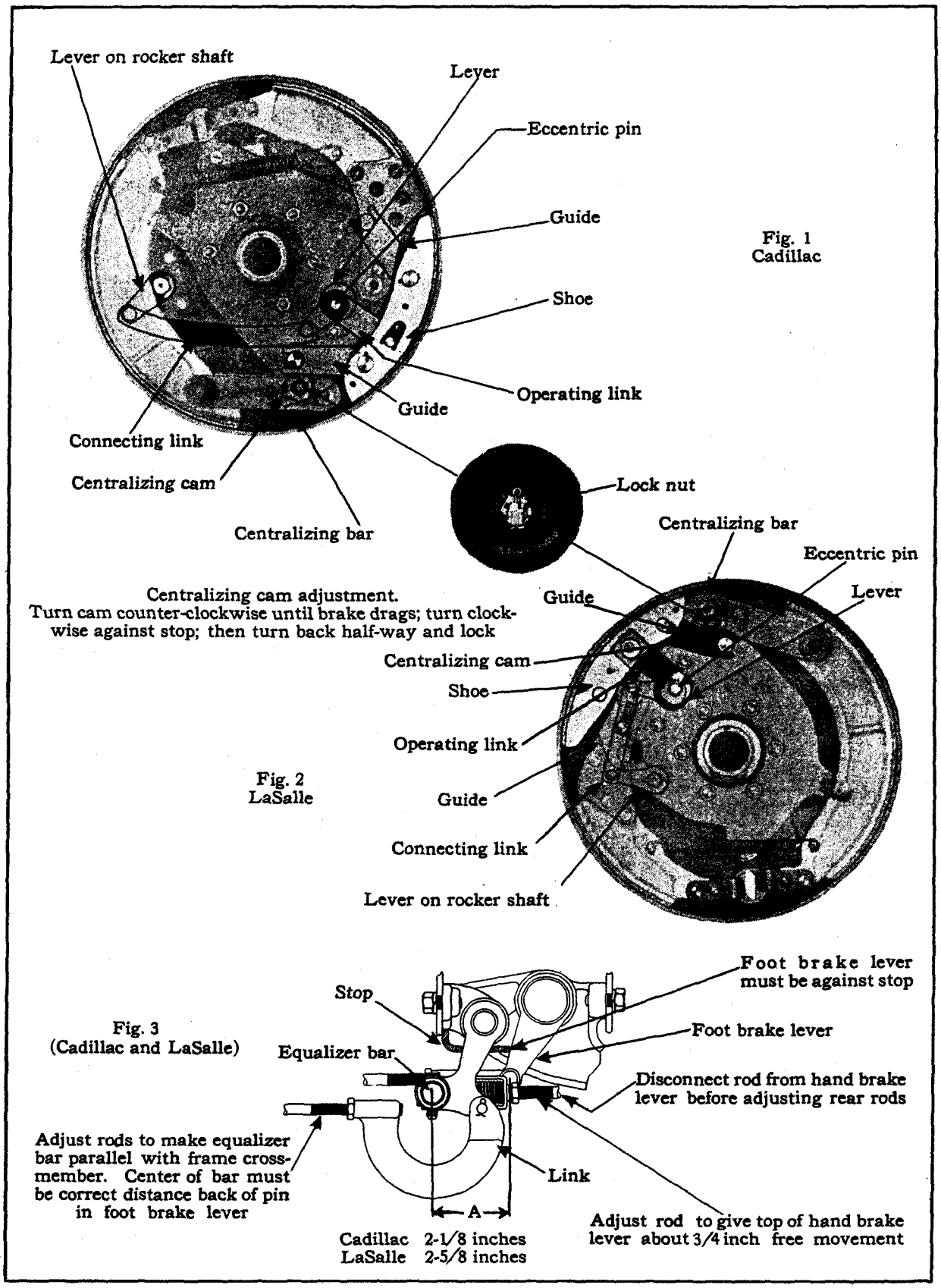

Fig. 1
Cadillac

Centralizing cam adjustment.
Turn cam counter-clockwise until brake drags; turn clockwise against stop; then turn back half-way and lock

Fig. 2
LaSalle

Fig. 3
(Cadillac and LaSalle)

Adjust rods to make equalizer bar parallel with frame cross-member. Center of bar must be correct distance back of pin in foot brake lever

Cadillac 2-1/8 inches
LaSalle 2-5/8 inches

Plate 12. Cadillac 341-B and La Salle 328 hand brakes.

Note: Adjustment of connections must precede adjustment of bands. Connections must also be freed up before adjustment. Make all adjustments of connections in released position

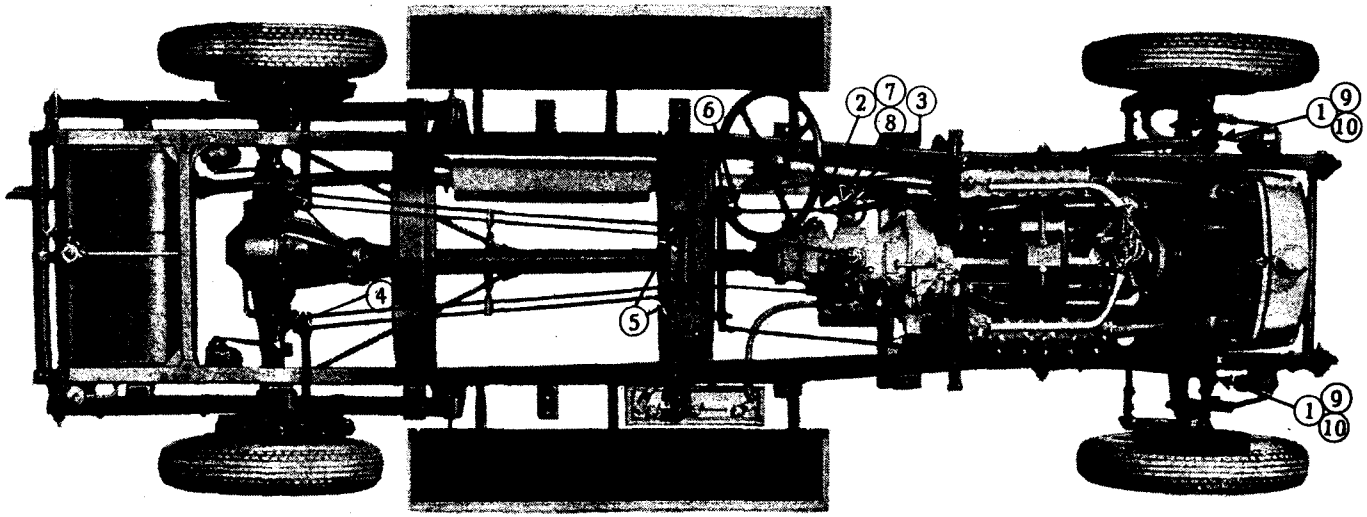

Preliminary { 1 Back off nuts on front ends of cables
2 Remove pedal rod and yoke assembly

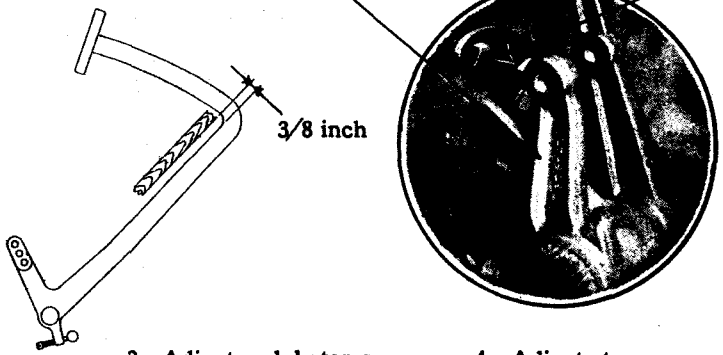

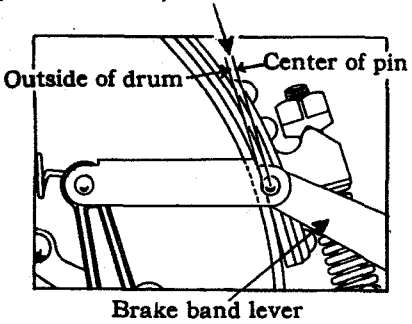

Gauge 109603

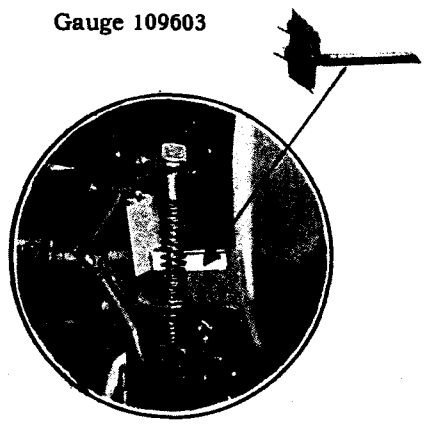

3 Adjust pedal stop screw

4 Adjust stop screws in rocker shaft levers to give correct position of brake band levers. Preferably use gauge

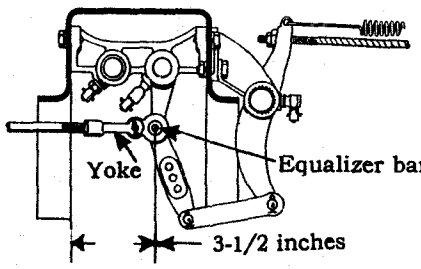

5 Adjust yokes on rods to give correct position of equalizer bar. Preferably use gauge

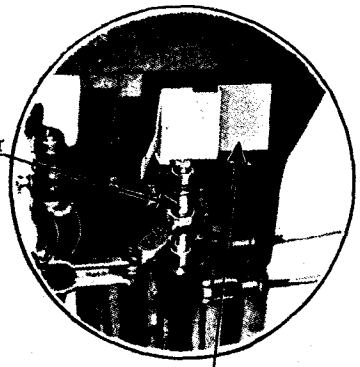

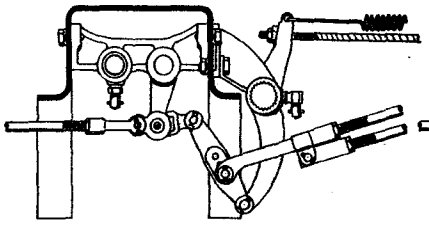

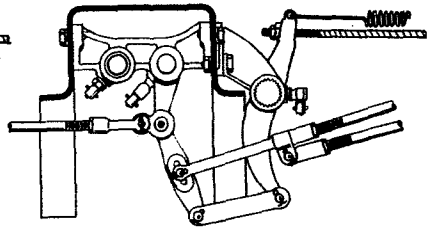

First type hook-up. Use bottom hole in division bar

Second type hook-up. Use middle hole in division bar

6 Connect rear end of pedal rod assembly to division bar



Gauge 109602



7 Adjust yoke on lower pedal rod to give correct position of levers on front brake cross shaft. Preferably use gauge

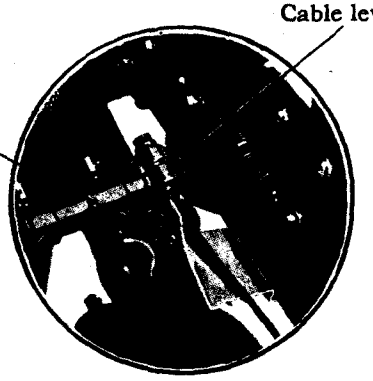

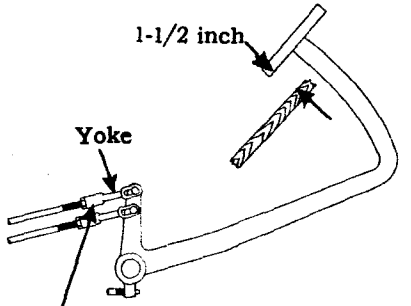

8 Adjust yoke on upper rod so second stage takes effect when pedal is 1-1/2 inches from toe board

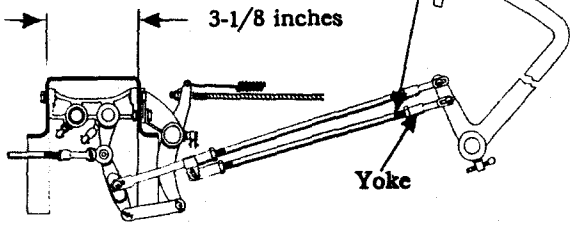

9 Check position of cable levers. Preferably use gauge

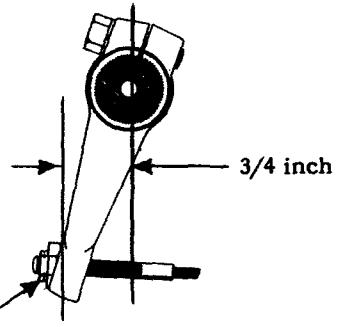

10 Adjust cable nuts to take up slack in cables

Adjustment of Cadillac 341-A Brake Connections.

Note: Adjustment of connections must precede adjustment of bands. Connections must also be freed up before adjustment. Make all adjustments of connections in released position

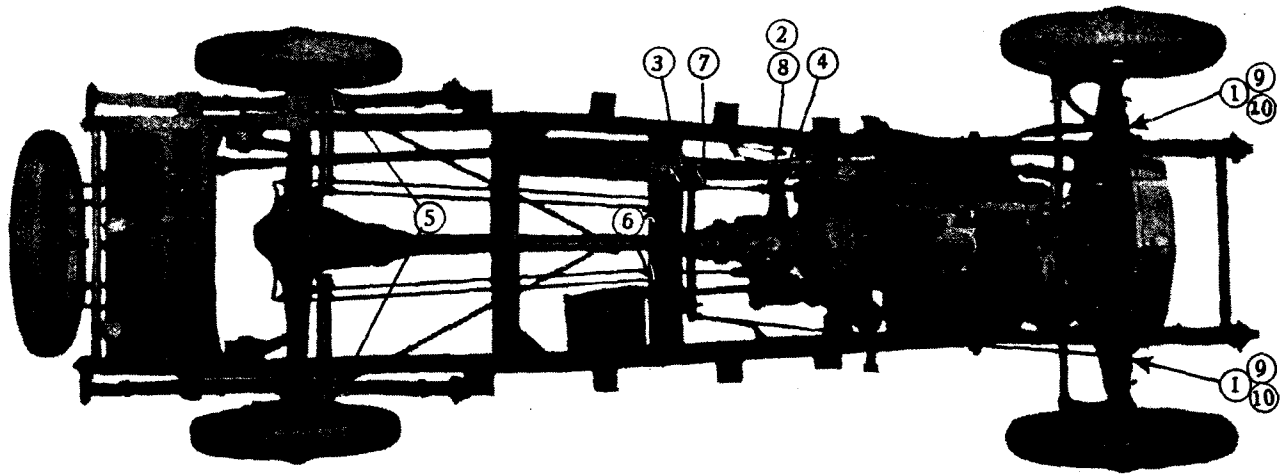

Preliminary
1 Back off nuts on front ends of cables
2 Disconnect pedal rod from pedal
3 Disconnect division bar link

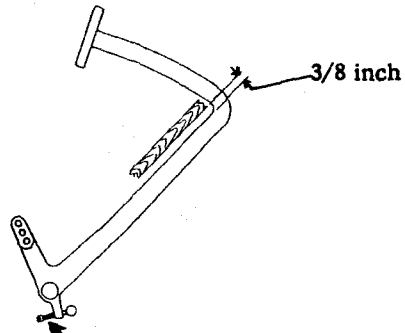

4 Adjust pedal stop screw

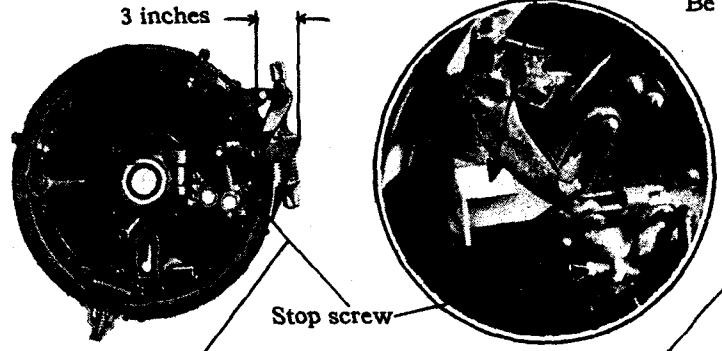

5 Adjust stop screw to give correct position of lever. Preferably use gauge

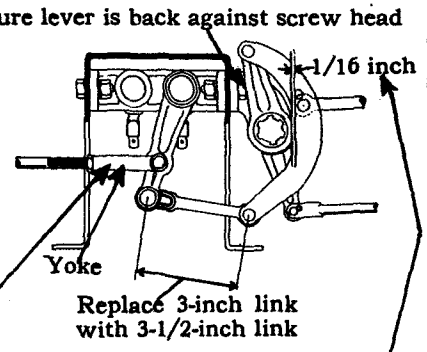

6 Adjust yokes on rods so that division bar will clear lever on cross shaft when link is connected

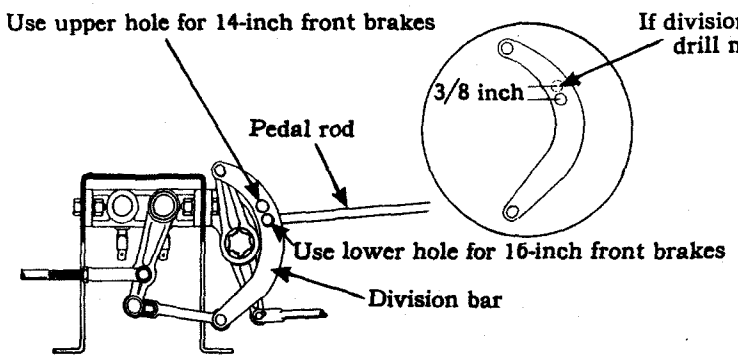

7 Make sure pedal rod is connected to proper hole in division bar

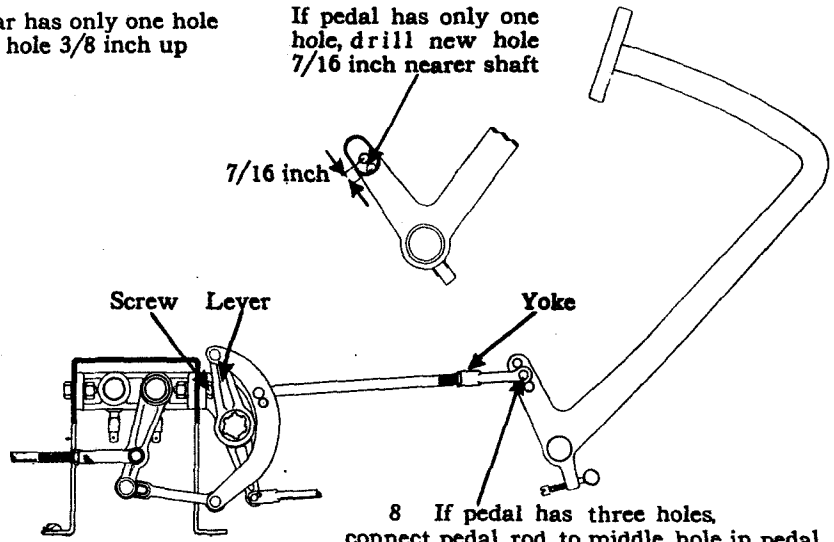

8 If pedal has three holes, connect pedal rod to middle hole in pedal. Adjust yoke so lever clears screw in bracket

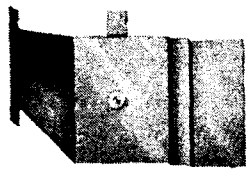

Gauge 109420

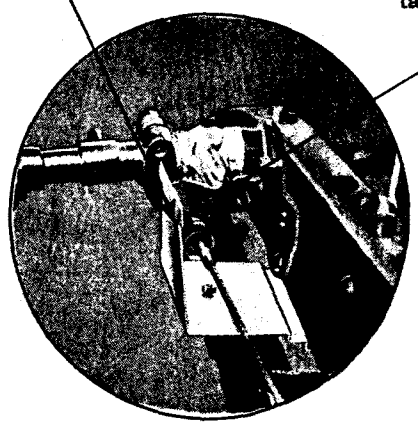

9 Check position of cable levers. Preferably use gauge. (Omit this step on all cars with 14-inch front brake drums and on cars with 16-inch drums which have levers welded on shaft)

10 Adjust cable nuts to take up slack in cables

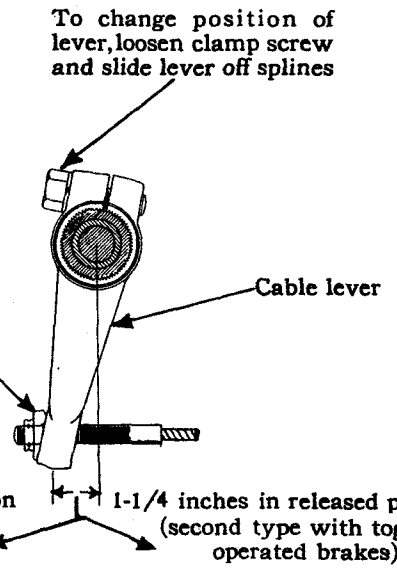

Note: Unless brake connections are known to be O. K., check them as shown in Plate 13 before proceeding with band adjustments

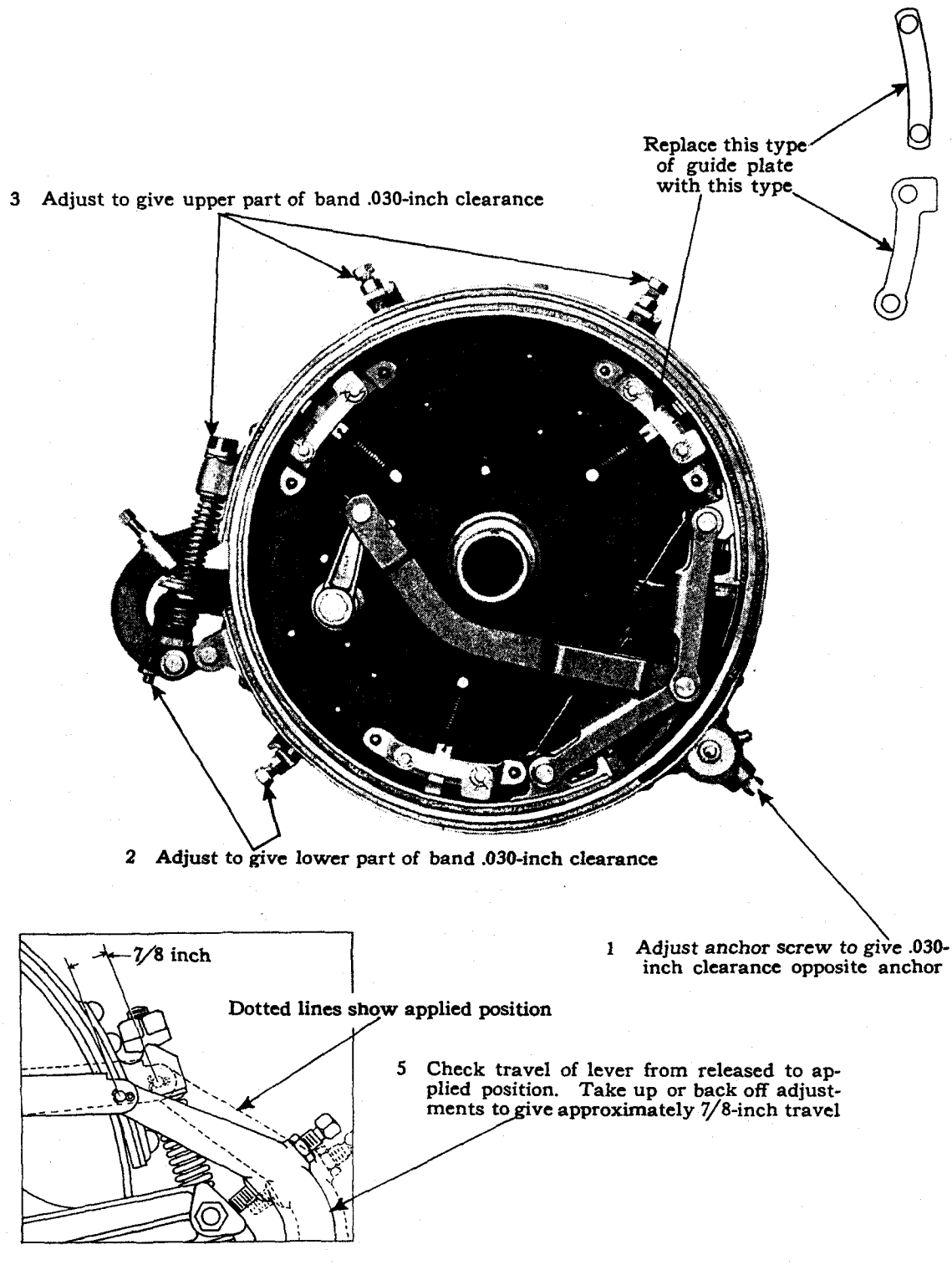

Plate 15. Adjustment of Cadillac 341-A rear foot brakes.

Note: Unless brake connections are known to be O. K., check them as shown in Plate 14 before proceeding with band adjustments

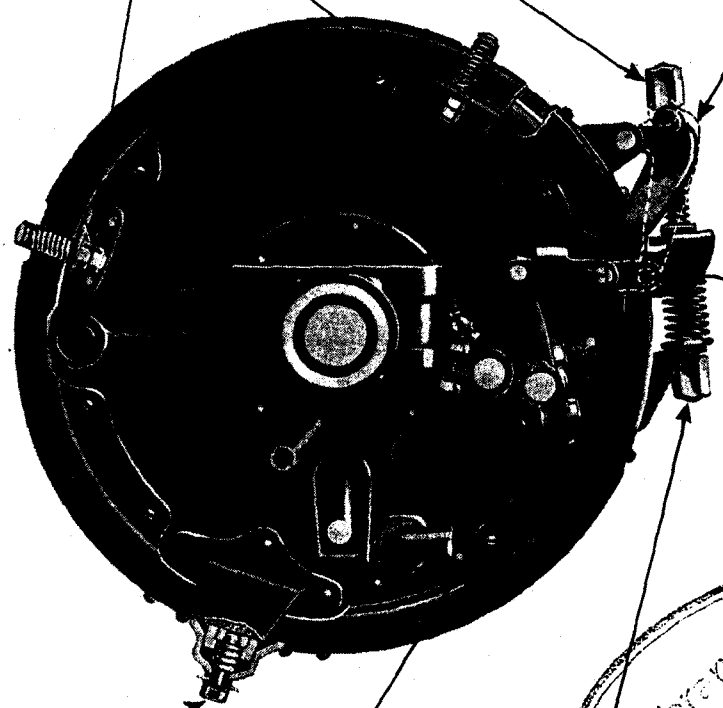

Library General Motors Corporation Research Laboratories

Plate 16. Adjustment of La Salle 303 rear foot brakes.

Note: Unless brake connections are known to be O. K., check them as shown in Plate 14 before proceeding with band adjustments

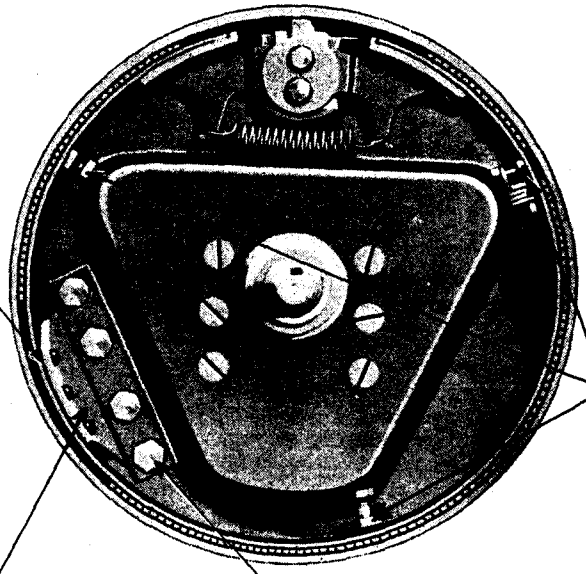

If anti-squeak is used between anchor plate and dust shield, remove and replace with thin canvas

2 Adjust stop screws to give .015-inch clearance

Anchor screws must be drawn tight

1 Adjust anchor in and out to give .015-inch clearance and up and down to centralize band

If lining stands away here, move anchor down

If lining stands away here, move anchor up

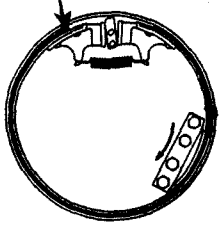

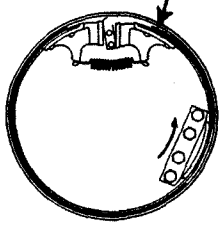

Gauge 109420

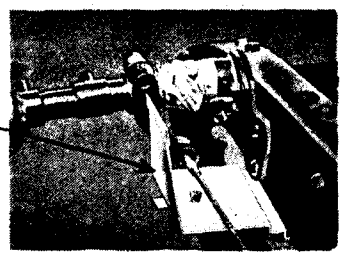

4 Check position of cable levers with brakes applied. Preferably use gauge. Change position of lever on splined shaft as necessary

3 Adjust nuts on cables to complete band adjustment and give .015-inch clearance all around

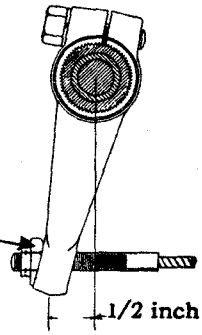

1/2 inch in applied position

Plate 17. Adjustment of La Salle 303 front brakes—first type.

Note: Unless brake connections are known to be O. K., check them as shown in Plates 13,14 before proceeding with band adjustments

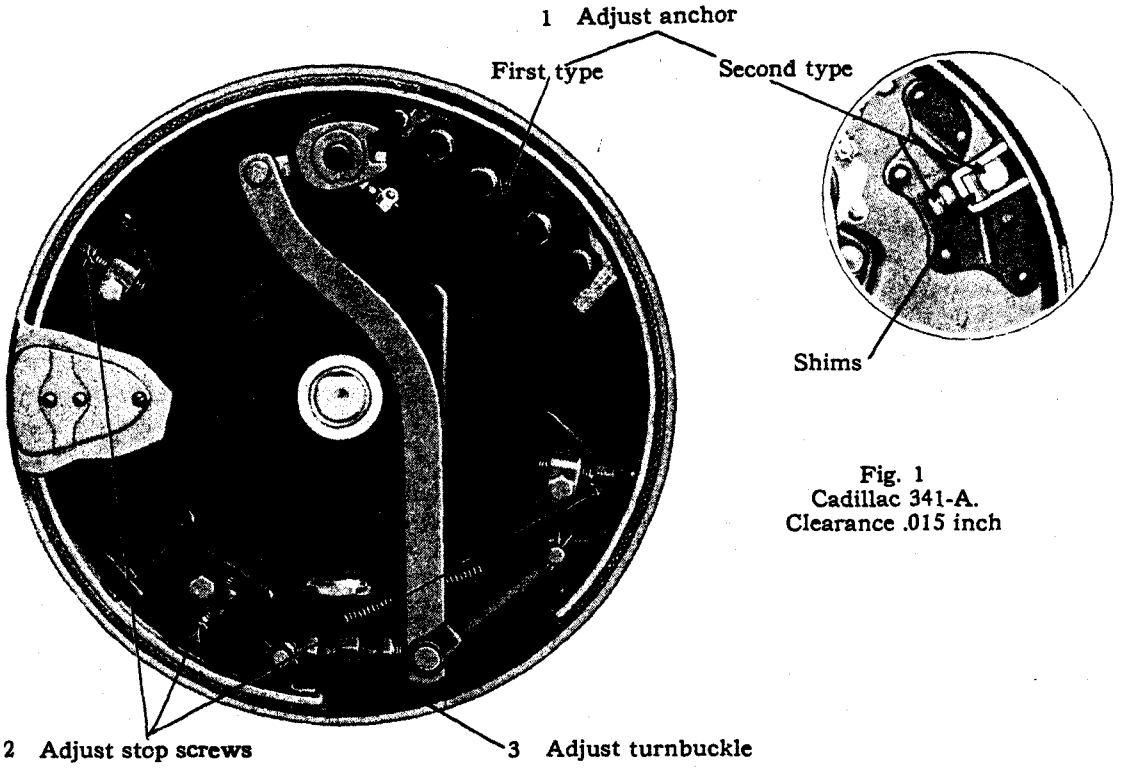

Fig. 1
Cadillac 341-A.
Clearance .015 inch

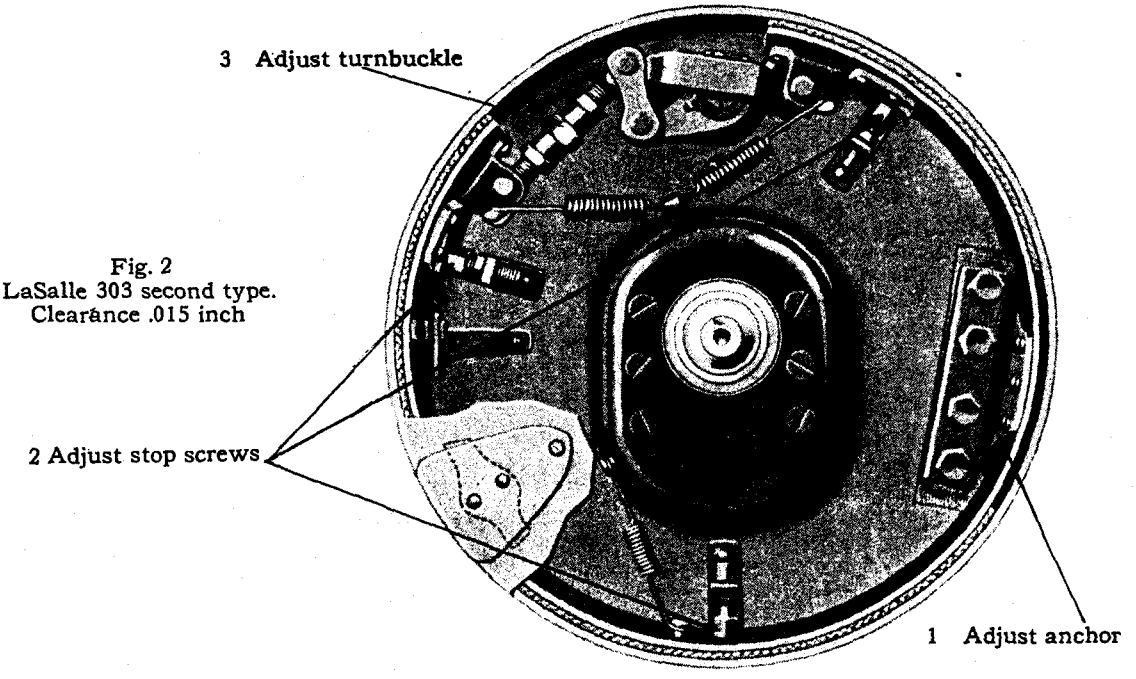

Fig. 2
LaSalle 303 second type.
Clearance .015 inch

Plate 18. Adjustment of front brakes, Cadillac 341-A and La Salle 303—second type.

Clutch

Subject	Cadillac 341		LaSalle 303-328		Specifications	Remarks
PLATE TYPE						After engine unit 2-12001 on 303 cars.
Clearance between driving plates and driving pins	A	B	303[2]	328	New limits, .005—.008 in. Worn limit, not over .010 in.	
Clearance between hub and splines on clutch connection shaft	A	B	303[2]	328	New limits, .0005—.002 in. Worn limit, not over.005 in.	
Clearance between release bearing sleeve and transmission bearing cap	A	B	303[2]	328	New limits, .001—.004 in. Worn limit, not over .006 in.	
Clearance between release shaft and bearings in transmission case	A	...	...	...	New limits, .003—.006 in. Worn limit, not over .010 in.	
Clutch pedal, free movement	A	B	303[2]	328	7/8—1 1/8 in.	
Clutch spring compression	A	B	303[2]	328	67—73 lbs. at 1 3/8 in.	
Clutch spring, number	A	B	303[2]	328	12	
Disc facing diameter, inside	A	B	303[2]	328	6 1/2 in.	
Disc facing diameter, outside	A	B	303[2]	328	9 1/2 in.	
Disc facing, number	A	B	303[2]	328	4	
Disc facing, thickness	A	B	303[2]	328	.125—.130 in.	
Disc with facings, thickness	A	B	303[2]	328	New limits, .305—.315 in. Worn limit, not less than .250 in.	See note 1.
Release bearing	A[1]	...	...	...	...	See note 2.
Release bearing pull-back spring, free length	A	...	303[2]	...	2 1/4 in., approxmately	
Release bearing pull-back spring, tension	A	B	303[2]	328	6—8 lbs. when stretched to 3 3/8 in. between loops	
Removal of clutch	A	B	303[2]	328	...	See note 3.
MULTIPLE DISC TYPE						Before engine unit 2-12001 on 303 cars.
Clearance between driven discs and teeth on hub. (Except rear disc)	...	...	303[1]	...	Worn limit, not over .008 in.	Fit rear disc tight on hub; next to rear disc, snug sliding fit.
Clearance between teeth on driving discs and teeth on flywheel. (Except rear disc)	...	...	303[1]	...	Worn limit, not over .010 in.	Rear disc, snug sliding fit in flywheel.
Clearance between release bearing sleeve and transmission bearing cap	...	...	303[1]	...	New limits, .001—.004 in. Worn limit, not over .006 in.	
Clutch pedal, free movement	...	...	303[1]	...	7/8—1 1/8 in.	
Clutch spring, compression	...	...	303[1]	...	Not under 420 lbs. at 2 13/32 in.	
Disc facing diameter, inside	...	...	303[1]	...	6 11/16 in.	
Disc facing diameter, outside	...	...	303[1]	...	7 5/8 in.	
Disc facing, number	...	...	303[1]	...	10	
Disc facing, thickness	...	...	303[1]	...	.130—.140 in.	

Subject	Cadillac 341	LaSalle 303-328	Specifications	Remarks
Disc, installation of		303[1]		See note 4.
Release bearing pull-back spring, free length		303[1]	1½ in., approximately	
Release bearingpull- back spring, tension		303[1]	6—8 lbs. at 1⅞ in. between loops.	
Thickness of driving disc with facing		303[1]	Not under $\frac{5}{16}$ in.	

1. Refacing Plate-Type Clutch

Replacement of the clutch driven discs with facings is recommended rather than relacing the original discs. The reason for this is because the surface of the facing must be ground after it is riveted to the disc, to insure the correct thickness. If the facing is too thick the disc will drag on the center plate. As it is impractical to grind the discs in service, the practice of replacing the discs and facing must be followed.

2. Clutch Release Bearing

On a few of the first 341-A cars, the clutch release bearing cannot be removed from the sleeve. If the bearing on these cars requires replacement, replace the sleeve and bearing as a unit. On later cars the sleeve has two holes through which the bearing can be reached to force it off the sleeve.

3. Removal of Plate-Type Clutch

Extreme care must be taken when removing the transmission to support the rear end so as to hold the transmission in perfect alignment with the clutch until the clutch connection shaft has been pulled *all the way out* of the clutch hub.

If the rear end of the transmission is allowed to drop down or is raised too high while the clutch connection shaft is still in the clutch hub, the clutch driven discs will be sprung out of shape. *This must be avoided.*

On cars which do not have the long piloting studs on the sides of the crankcase use special studs (Tool number 109222) provided for these cars. *Plate 60 Fig 1.*

4. Assembling Multiple Disc Clutch

The rear disc in the clutch is thicker than the other discs. This plate is fitted in the clutch driver at the factory and is marked to indicate its position in relation to the driver. When re-installing the clutch, make sure the marked tooth on the driver goes between the two marked teeth on the rear disc.

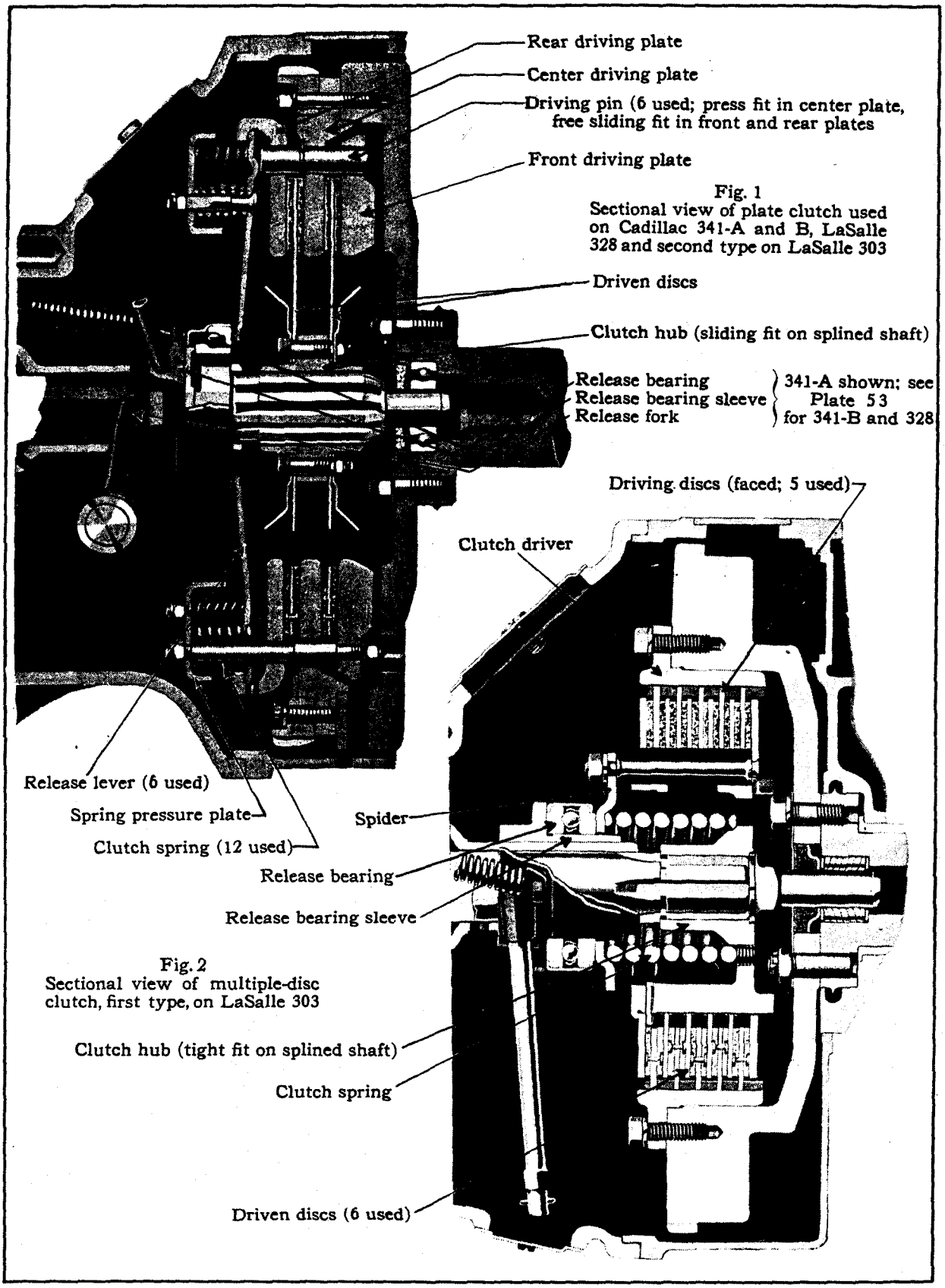

Fig. 1
Sectional view of plate clutch used on Cadillac 341-A and B, LaSalle 328 and second type on LaSalle 303

Fig. 2
Sectional view of multiple-disc clutch, first type, on LaSalle 303

Plate 19. Sectional view of clutch.

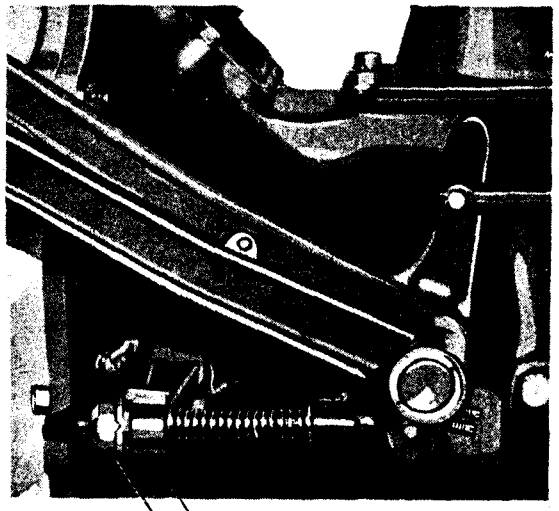

Fig. 1
LaSalle 303

Adjusting nut

Release fork

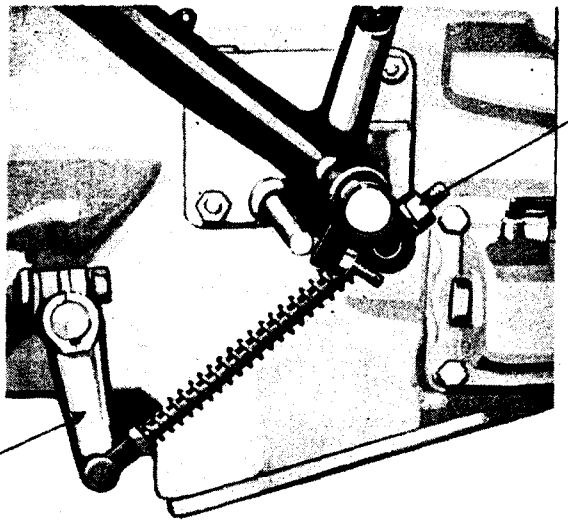

Adjusting nut

Fig. 2
Cadillac 341-A

Lever on release shaft

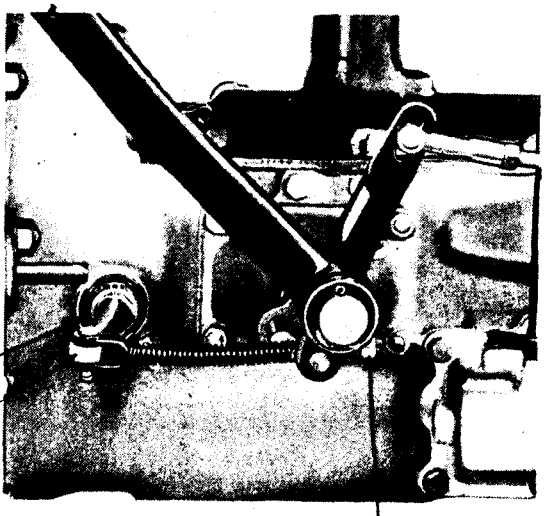

Fig. 3
Cadillac 341-B and LaSalle 328

Note: The adjustments shown in Figs. 1, 2 and 3 should all be made so as to give the clutch pedal about one inch free travel or lost motion before starting to disengage the clutch

Ball and socket bearing

Release fork

Adjusting nut

Plate 20. Adjustment of clutch pedal rod.

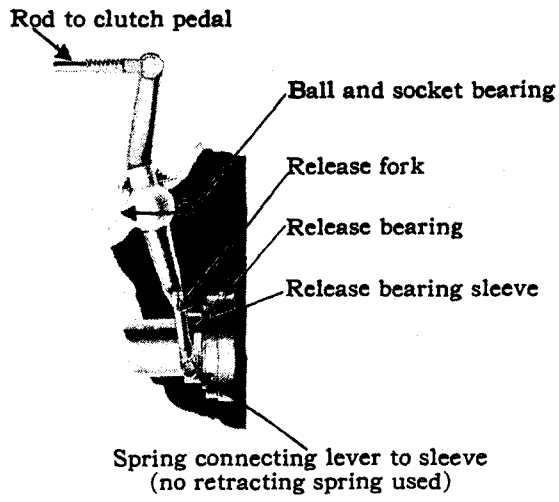

Fig. 1
Sectional view of clutch-release mechanism on Cadillac 341-B and LaSalle 328

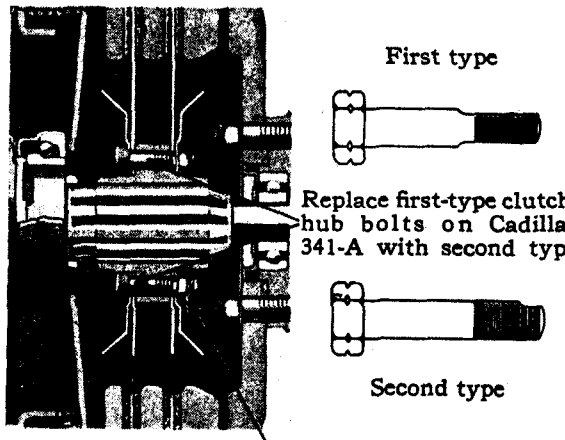

Fig. 2

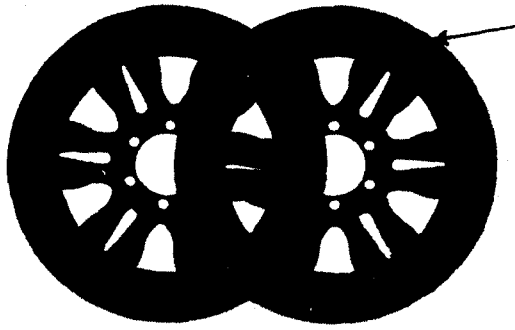

Fig. 3
Clutch driven discs with facing

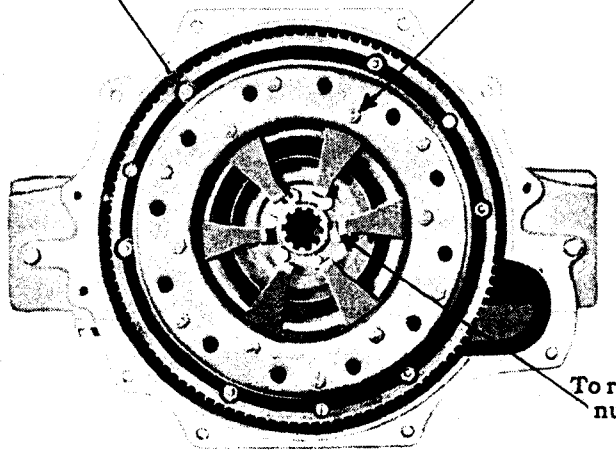

Fig. 4
Rear view of engine showing removal of clutch

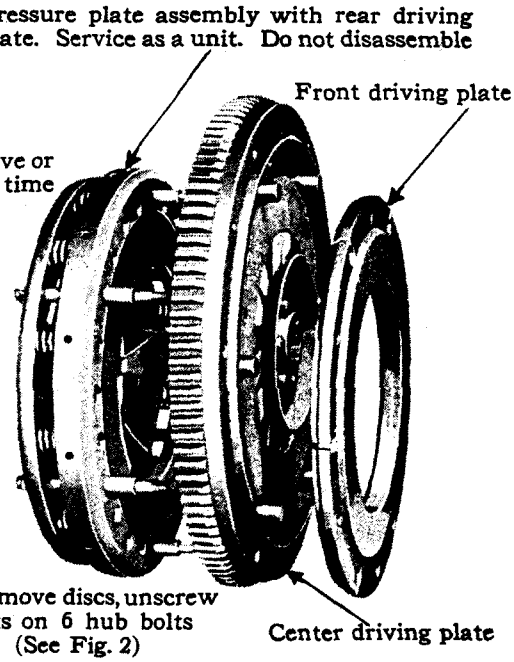

Fig. 5
Clutch disassembled

Plate 21. Removal and disassembly of plate-type clutch.

Cooling System

Subject	Cadillac 341		LaSalle 303-328		Specifications			Remarks
FAN								
Assembly, method of	A	B	303	328				See note 1.
Bearing diameter	A	B	303	328	¾ in.			
Belt, length	A	B	303	328	35 in.			
Belt, tension	A	B	303	328	⅝ in. slack with 15 lbs. pull.			*Plate 22, Fig. 3.*
Belt, width	A	B	303	328	1 in.			
Clearance between fanshaft and bushing	A	B	303	328	New limits, .004—.006 in. Worn limit, not over .010 in			
Diameter	A	B	303	....	20¼ in.			When replacing fan on 303 use 21-in. fan.
	...	...	....	328	21 in.			
Identification marks	A	B	....	328	"C"			Stamped on front face of hub cover. Fan for 328 is 21 in. in diameter. *Plate 22, Fig. 5.*
	...	...	303	....	"L"			
Lubrication	A	B	303	328	At every 1000 miles.			See note 2.
Oil capacity of fan reservoir	A	B	303	328				See Lubrication Table, page 83
Pitch of blades	A	B	....	328	33°			Cadillac 341-A Stamped "C"
	...	...	303	....	25°			Stamped "L"
HOSE CONNECTIONS								
Cylinder to radiator hose, diameter	A	B	303	328	1¼ in.			
Cylinder to radiator hose, length	A	B	....	....	16¾ in.			Before engine unit 3-11595 this hose was 16¼ in. long. When replacing, use 16¾ in. hose.
	...	...	303	....	10¾ in. R. H., 12 5/16 in. L. H.			
	...	...	....	328	14½ in.			
Cylinder block nipple to elbow hose, diameter	A	B	303	328	1¼ in. (either side)			
Cylinder block nipple to elbow hose, length	A	B	303	328	2¼ in. (either side)			
Pump to elbow hose, diameter	A	B	303	328	1⅝ in.			
Pump to elbow hose, length	A	...	303	....	13¾ in.			
	...	B	....	328	16⅝ in.			
Radiator to pump hose, diameter	A	B	303	328	1⅞ in.			
Radiator to pump hose, length	A	B	303	328	12⅛ in.			See note 3.
RADIATOR								
Anti-freeze solution					Qts.	Sp. gr. at 60°F.	% by Vol.	Sp. gr. at 60°F.—Specific gravity at 60° Fahrenheit
Alcohol required for 10°F	A	B	....	....	7¼	.9668	30	% by Vol.—Per cent by Volume.
	...	...	303	328	6¼	.9668	30	
Alcohol required for 0°F	A	B	....	....	9	.9567	38	
	...	...	303	328	8	.9567	38	
Alcohol required for – 10°F	A	B	....	....	10¾	.9485	45	The calculations are based on 180-proof alcohol (10% water). If 188-proof alcohol (6% water) is used, the amount of alcohol required can be reduced by 4% (volume).
	...	...	303	328	9½	.9485	45	
Alcohol required for – 20°F	A	B	....	....	12¼	.9350	51	
	...	...	303	328	10¾	.9350	51	
Alcohol required for – 30°F	A	B	....	....	13¾	.9260	57	
	...	...	303	328	12	.9260	57	

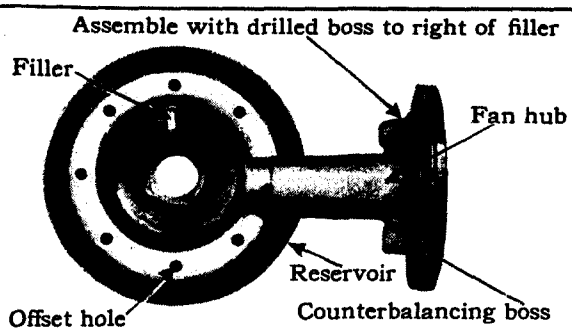

Fig. 1
To preserve balance fan hub and reservoir must be properly assembled

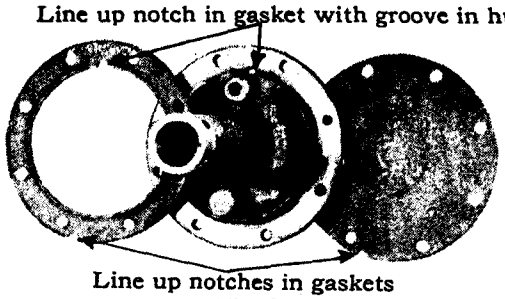

Fig. 2
Correct assembly of fan gaskets

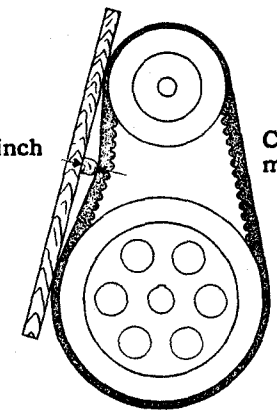

Fig. 3
Correct adjustment of fan belt

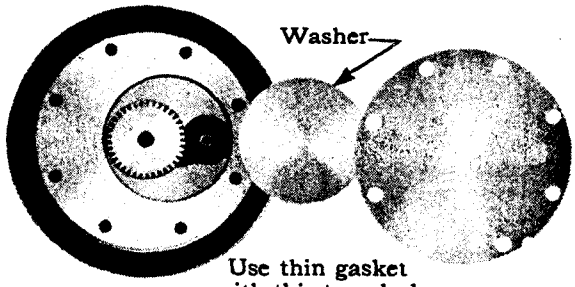

Fig. 4
Fan hub and thrust washer used on Cadillac 341-B and LaSalle 328. Use also for replacement on 341-A and 303

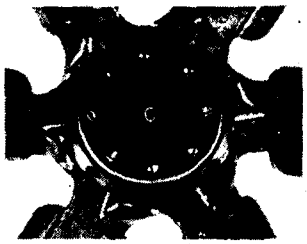

Fig. 5
Fan identification
C—Cadillac
L—LaSalle(303)

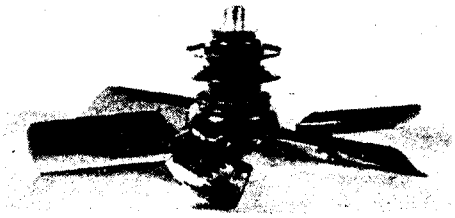

Fig. 6
Always place fan on bench with front down to prevent oil running out. Carry in same position

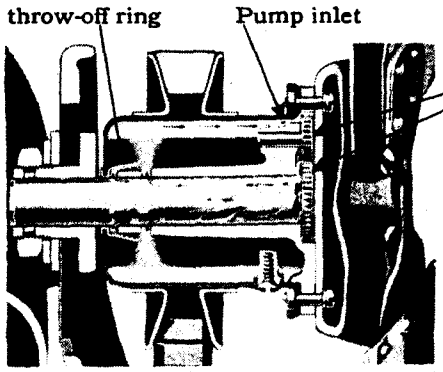

Fig. 7 Circulation of oil in fan.
Centrifugal force holds oil against outer wall of reservoir. Pump gears draw it through small hole and force it to bearing surface

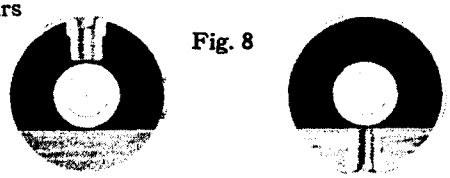

Fig. 8

Filler up for adding oil

Filler down for draining off surplus

Note: If reservoir is air-bound and surplus does not drain off at once, wait a few seconds to let air work in. Fan will throw oil if there is too much in reservoir

Plate 22. Fan Details.

Subject	Cadillac 341		LaSalle 303-328		Specifications	Remarks
Capacity of cooling system...	A	B	....	....	6 gals.	Total capacity of cylinder water jackets, hose connections and radiator. Do not fill radiator full. This will result in overflow when the water heats and expands. Expensive when anti-freeze is used.
	...	...	303	328	5¼ gals.	
Flushing radiator.....	A	B	303	328	.....	See note 4.
Manufacturer's number, location of.....	A	B	303	328	Rear of upper tank—right side	
Spacing of studs.....	A	...	....	....	.....	See note 5.
Thermostat.....	A	B	303	328	.....	See note 6.
Shutters open.....	A	B	303	328	Start to open 155°—165°F Full open—180°F.	
Shutters close.....	A	B	303	328	165°—170°F.	
Shutter rod adjustment.....	A	B	303	328	Adjustable end ⅛ in past operating arms.	See note 7. *Plate 23, Fig. 4.*
WATER PUMP						
Clearance between impeller and pump body.....	A	B	303	328	New limits, .055—.065 in. Worn limit, not over .075 in.	
Clearance between drive sprocket and support.....	A	B	303	328	New limits, .003—.005 in. Worn limit, not over .010 in.	
Clearance between pump shaft and bushings.....	A	B	303	328	New limits, .001—.003 in. Worn limit, not over .006 in.	

1. Fan Assembly

The fan must be assembled correctly to prevent unbalance.

Inspection of the fan will show that the hub has two bosses (*Plate 22 Fig. 1*), one of which is drilled to receive the smaller pump gear. The drilled boss should take a position just to the right of the filler plug at which point the bolt holes will line up correctly. The other boss is on the opposite side of the hub and is of sufficient weight to counterbalance the small gear and drilled boss together with the filler plug in the oil reservoir.

In order to maintain the correct position of the balancing parts when assembling the fan, one of the eight bolt holes in the hub, the reservoir, the gaskets and the blades, is purposely off-set $\frac{1}{16}$ inch. (*Plate 22 Fig. 1*). When assembling these parts the holes should line up correctly and under no consideration should the off-set hole be filed or elongated to enable the blades to be installed in any other position.

A further precaution in assembling the fan should be observed in the placing of the gasket. The ring type gasket has a notch on its inner circumference which must coincide with the small oil intake hole in the hub. The notches on the outer circumference of the ring type gasket and the solid gasket should also be in line. (*Plate 22 Fig. 2*)

On fans for 341-B and 328 cars, the hub is counterbored deeper to permit the installation of a metal plate between the oil pump gears and the gasket.

With these fans a thinner gasket should be used as it is easier to keep oil tight. On fans that do not have this metal plate the thicker gasket must be used so that it will fill in the space in front of the gears.

2. Lubrication of Fan

The only way to make sure that the fan has the proper amount of oil is to add more than enough and then turn the filler hole down and allow the surplus to drain off. (*Plate 22 Fig. 8*). If the surplus oil does not drain off at once, it is because the reservoir is "air-bound," and the filler hole should be left inverted for several minutes until the oil drains out. Oil should be added to the fan every 1000 miles.

3. Aligning Water Pump Hose with Radiator Connection

The holes for the screws by which the pump is attached to the sprocket support are purposely made $\frac{1}{32}$ inch larger in diameter than the screws themselves. The reason for this is to permit the pump inlet connection to be lined up with the water outlet on the radiator, so that the hose will be as nearly in a straight line as possible.

In order to make use of this feature the pump screws should be loosened whenever the generator chain is adjusted. Then, as the sprocket support is moved, the pump will be free to align itself.

Because of the fact that the holes in the pump flange are so much larger than the screws, flat washers as well as lock washers are used under the heads of the screws. It is very important that these washers always be in place. If they are omitted, the screws will bottom against the chain housing, instead of clamping the pump to the face of the sprocket support. This would tend to pry the support away from the chain housing and cause an oil leak.

If a water pump is removed for any reason the flat washers must be reinstalled.

4. Flushing Cooling System

In order to keep the Cooling System free from an excessive accumulation of sediment and scale, it should be flushed by the reverse-flow method every 4000 miles.

To flush the system, the hose connection at the bottom of the radiator should be disconnected and the flushing hose attached to the radiator outlet. The flushing water will then be forced up through the radiator, back through the cylinder jackets and pump and out through the disconnected hose. The flushing operation should be continued until the water from the pump is reasonably clear.

The pressure of the water used in flushing the cooling system should not exceed 20 to 25 pounds as a higher pressure is liable to damage the radiator.

5. Spacing of Radiator Studs

On 341-A Cadillac cars previous to engine unit 300600 and after engine unit 301200 (these numbers are approximate), the radiator studs are 9 inches apart on centers. On cars between these two unit numbers and also on some later 152-inch chassis, the radiator studs are 15 inches apart.

Whenever a radiator core having the studs 15 inches apart requires replacement, it will be necessary to remove the anchorage from the old core and use it with the new core to permit installing the new radiator on the chassis. To replace the anchorage, it is simply necessary to remove the two bolts which hold the anchorage on each side.

6. Operation of Thermostat

The thermostat plunger should start its stroke at a temperature of not less than 150° and should have a full stroke of $\frac{1}{32}$ inch at a temperature of not over 175°. The test may be made by placing the thermostat in water of the proper temperature.

7. Adjustment of Shutter Rod

The yoke end of the shutter operating rod should be adjusted to bring the center of the hole in the yoke about $\frac{1}{8}$ inch beyond the center of the holes in the operating arms when the rod is detached. *Plate 23, Fig. 4.*

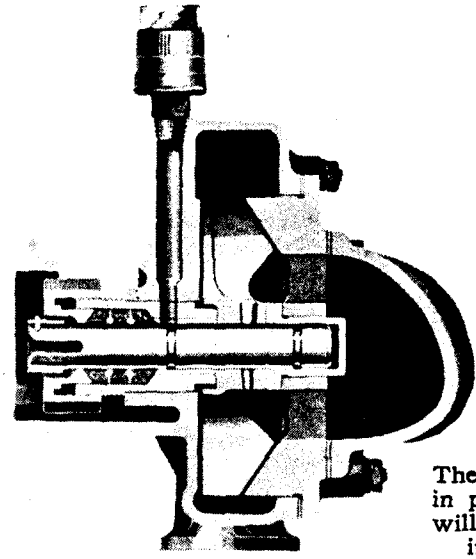

Fig. 1
Sectional view of water pump

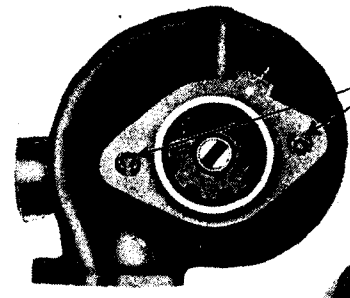

Fig. 2
Enlarged holes in water pump flange to permit lining up inlet with radiator connection

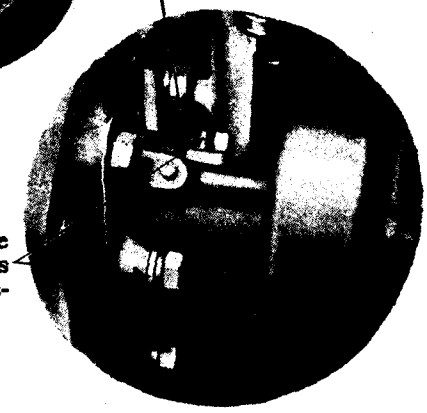

These flat washers must be in place; otherwise screws will bottom on chain housing and cause oil leak

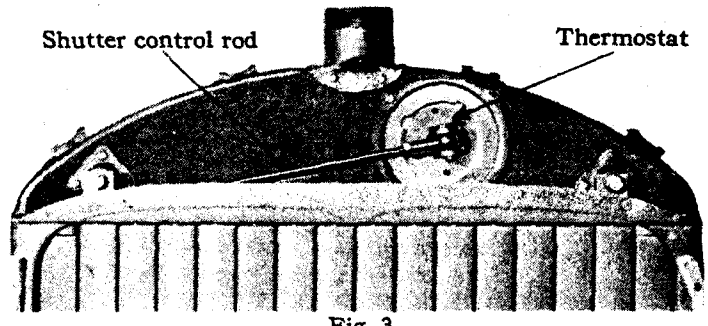

Fig. 3
Front view of radiator showing thermostat and shutter control

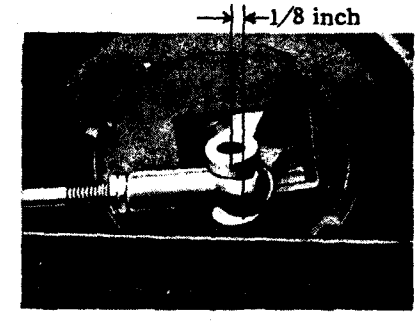

Fig. 4
Adjustment of shutter control rod

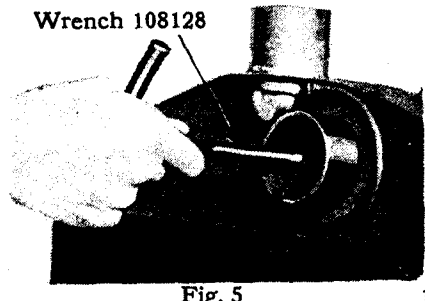

Fig. 5
To remove thermostat unscrew retaining nut

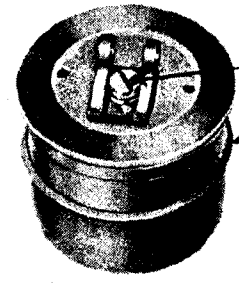

Fig. 6 Thermostat assembly. To disassemble remove trunnion screw

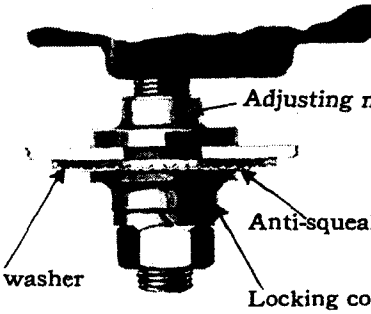

Fig. 9
Radiator support



Fig. 7
Thermostat cover assembly

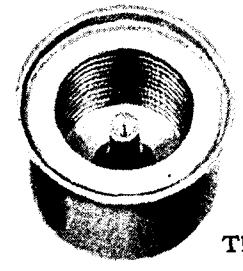

Fig. 8
Thermostat

Plate 23. Cooling System Details.

Electrical System

Subject	Cadillac 341		LaSalle 303-328		Specifications	Remarks
Connections on gasoline tank float unit	A					See note 1.
Stentor phones	A	B	303	328		See note 2.
STORAGE BATTERY						
Manufacturer's number	A	B			Exide, 3-LXRV-15-2-G	
			303		Exide, 3-XC-15-1-G	
				328	Exide, 3-MXV-15-1	
Capacity, rated	A	B			130 ampere hours	
			303	328	100 ampere hours	
Capacity, lighting	A	B			5 amperes for 26 hours	
			303	328	5 amperes for 20 hours	
Capacity, starting	A	B			137 amperes for 20 minutes	
			303	328	114 amperes for 20 minutes	
Charging rate on bench, start	A	B			10 amperes	
			303	328	8 amperes	
Charging rate on bench, finish	A	B	303	328	4 amperes	
Corrosion on terminals	A	B	303	328		See Note 3.
Number of plates	A	B	303	328	15 plates	
Specific gravity of battery solution	A	B	303	328		See Note 4.
Terminal grounded	A	B	303	328	Positive	
Voltage, rated	A	B	303	328	6 volts	
Water, add to storage battery	A	B	303	328		See Note 5.
CIRCUIT BREAKER						
Manufacturer's number	A	B	303	328	Delco-Remy 5759	
Lockout circuit breaker opens	A	B	303	328	25-30 amperes	
Vibrating circuit breaker starts	A	B	303	328	25-30 amperes	See Note 6.
CUT-OUT RELAY						
Manufacturer's number	A	B	303	328	Delco-Remy 266N	
Air gap between contacts	A	B	303	328	.015-.025 in.	
Air gap between cut-out armature and core	A	B	303	328	.014-.021 in.	This measurement is made with contacts together.
Cut-out closes	A	B	303	328	At 7.5 volts, approximately	Corresponding armature speed, 420 R P. M.; car speed, 8-10 M. P. H
Cut-out opens	A	B	303	328	At discharge of 0 to 2.5 amperes	
GENERATOR						
Manufacturer's number	A	B	303	328	Delco-Remy 384	
ARMATURE						
Commutator, out of round	A	B	303	328	Not over .002 in.	
End play in ball bearing	A	B	303	328	Not over .015 in.	
Radial (side) play in ball bearing	A	B	303	328	Not over .004 in.	
BRUSHES						
Tension of brush arm springs	A	B	303	328	16-20 oz.	Test with spring scale, Tool number 100242.
Charging rate on bench—						
700 R. P. M. (cold)	A	B	303	328	7 amperes at 7.2-7.4 volts	
1400 R. P. M. (cold)	A	B	303	328	18 amperes at 8.2-8.62 volts	
1600 R. P. M. (hot)	A	B	303	328	10-12 amperes at 7.3-7.7 volts	
Charging rate after thermostat opens	A	B	303	328	5-6 amperes, approximately	

Fig. 1
Sectional view of generator

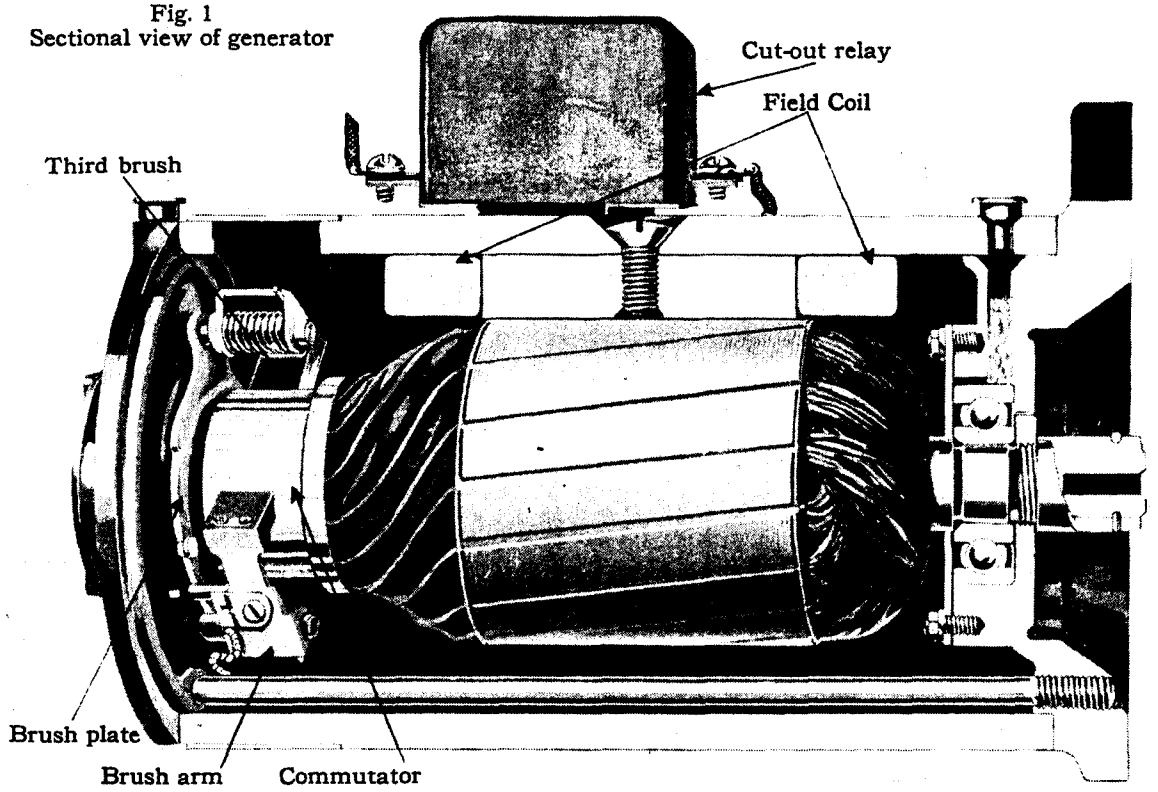

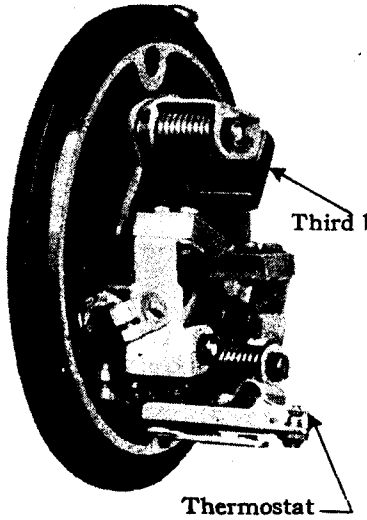

Fig. 3
End-frame of first-type generator showing split-pole type of thermostat

Fig. 2
Adjusting charging rate. Pry against brush arm, not brush. On later-type generator, pry against slot in brush plate

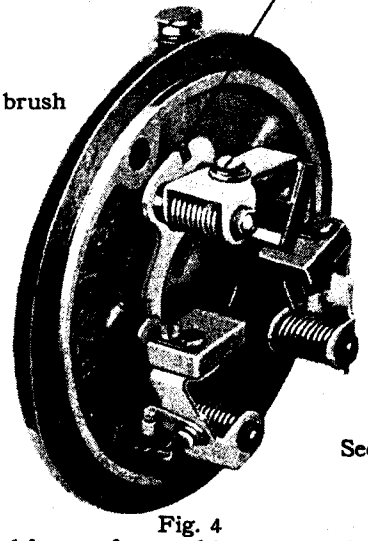

Fig. 4
End-frame of second-type generator. Thermostat on housing instead of end-frame

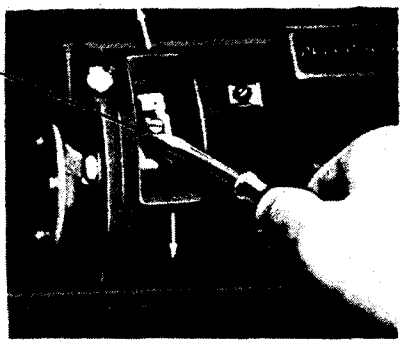

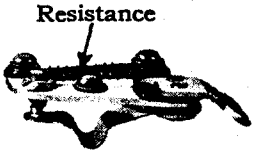

Fig. 5
Second-type thermostat with resistance

Plate 24. Generator Details.

Subject	Cadillac 341		LaSalle 303-328		Specifications	Remarks
Charging rate on car	A	B	303	328	16-18 amperes, maximum (cold)	
Current regulation	A	B	303	328	Third brush (thermostat control)	*Plate 24, Figs. 3, 4, 5*
Running engine with storage battery disconnected	A	B	303	328		See Note 7
Thermostat control	...	...	303[1]	....	Split field	Before engine unit 2-10750.
	A	B	303[2]	328	Resistance in series with field coils	Beginning with engine unit 2-10750 on 303 cars. See Note 8.
Thermostat opens	A	B	303	328	175° Fahrenheit	
Voltage, rated	A	B	303	328	6 volts	
HORN						
Manufacturer's number	...	...	303[1]	....	Delco-Remy K25 Type C991	
	A	B	303[2]	....	Delco-Remy K19 Type 1050	
	...	...	....	328	Delco-Remy K19 Type 1053	
ADJUSTMENTS						
Air gap between armature and field core	...	...	303[1]	....	.025 in. clearance	Adjust by loosening retaining nut and turning aluminum disc to give proper clearance. *Plate 25, Fig. 1*
	A	B	303[2]	328	.025 in. clearance	Adjust by loosening three stud nuts and raising or lowering field coil to give proper clearance. *Plate 25, Fig. 2.*
Position of vibrating spring	...	...	303[1]	....	Horizontal	*Plate 25, Figs. 1, 2.*
	A	B	303[2]	328	Slight angle below horizontal	
Contact point adjustment	A	B	303	328	Until proper tone is secured	
Current consumption	A	B	303	328	7-8 amperes	
IGNITION						
COIL						
Manufacturer's number	A	B	303	328	Delco-Remy 2195	
Current consumption	A	B	303	328	2 amperes, engine stopped 2½ amperes, engine running	
DISTRIBUTOR						
Manufacturer's number	A	...	303	....	Delco-Remy 4023	
	...	B	....	328	Delco-Remy 4041	
Angle between contact arms	A	B	303	328	135°	See Note 9.
Contact point gap	A	B	303	328	.0225-.0270 in.	
Firing order	A	B	303	328	1L, 4R, 4L, 2L, 3R, 3L, 2R, 1R.	
Side play in ball bearing	A	B	303	328	Worn limit, not over .003 in.	
Spark advance, automatic	A	...	303	....	32°	
	...	B	....	328	21°	
Spark advance, manual	A	B	303	328	38°	
Tension of contact arm springs	A	B	303	328	16-20 oz.	Measure with spring scale, Tool 100242. *Plate 27, Fig. 1.*
Timing, low-compression cylinder heads	A	B	303	328	⅛ in. ahead of center, manual control advanced	See Note 10.
Timing, high compression heads	A	...	303	....	½ in. ahead of center, manual control advanced	
	...	B	....	328	⅛ in. ahead of center, manual control advaned	
SPARK PLUGS						
Coated with Duco	A	B	303	328		Clean plugs with alcohol or Duco thinner.
Gap	A	B	303	328	.025-.028 in.	
Type	A	B	303	328	A. C. Type Y	

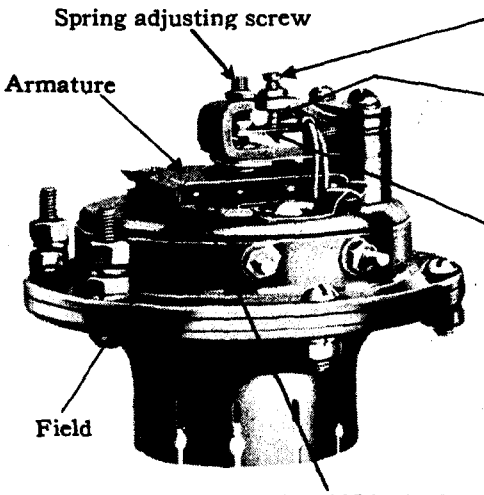

Fig. 1
Delco-Remy horn.
Type K-25-C991 used on LaSalle 303, first type

2 Turn diaphragm to give .025-inch clearance between armature and field poles

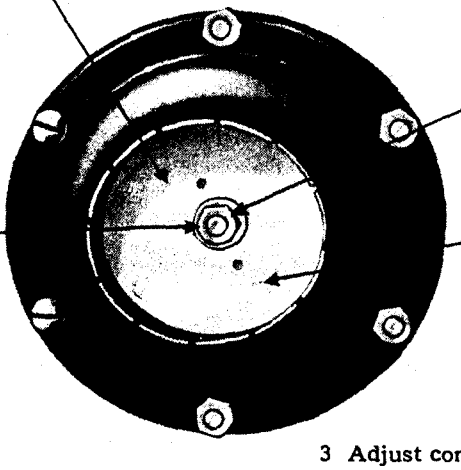

3 Adjust contact points to give proper tone

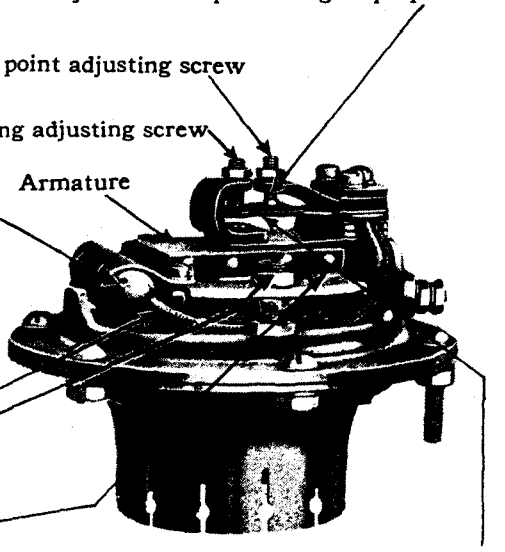

Fig. 2
Delco-Remy horn.
Type K-19-1050 used on Cadillac 341-A and B and LaSalle 303 second type.
Type K-19-1053 used on LaSalle 328.
(The same adjustments are applicable to both types)

Plate 25. Horn adjustments.

Subject	Cadillac 341		LaSalle 303-328		Specificatons	Remarks
STARTING MOTOR						
Manufacturer's number	A	B	....	....	Delco-Remy 382	
	...	...	303	328	Delco-Remy 725-C.	
ARMATURE						
Clearance between armature shaft and bearings	A	B	303	328	Worn limit, not over .010 in.	
Clutch spring, free length	A[1]	...	303[1]	....	2 in., approximately	Before engine number 312924 on 341-A cars and 219923 on 303 cars.
	A[2]	B	303[2]	328	2¼ in., approximately	Beginning with engine number 312924 on 341-A cars and 219923 on 303 cars.
Clutch spring, compression	A[1]	...	303[1]	....	34—38 lbs. at 1 in.	Before engine number 312924 on 341-A. cars and 219923 on 303 cars.
	A[2]	B	303[2]	328	46—52 lbs. at 1 in	Beginning with engine number 312924 on 341-A cars and 219923 on 303 cars.
Commutator, out of round	A	B	303	328	Worn limit, not over .002 in.	
End play	A	B	303	328	Worn limit, not over .025 in.	
BRUSHES						
Number of brushes	A	B	....	....	6	
	...	...	303	328	4	
Tension of brush arm springs	A	B	....	....	36-40 oz.	Test with spring scale, Tool 100242.
	...	...	303	328	24-28 oz.	
Gear ratio	A	B	303	328	12 to 1	Ratio between starter gear and flywheel gear.
Number of poles	A	B	....	....	6	
	...	...	303	328	4	

1. Arrangement of Units in Circuit Diagrams.

The positions of the units and wires in the circuit diagrams do not always correspond to their location on the car.

For instance, the float unit of the gasoline gauge is shown in the center of the 341-A Cadillac diagram (Plate 32). When looking at the float unit from the rear of the car the green wire is connected to the right terminal, which is terminal No. 2, and the black wire to the left terminal, which is terminal No. 1.

On the diagram, however, terminal No. 1 is on the right and terminal No. 2 on the left, which makes it appear that the unit is upside down. This was done so that the wires to the float unit would not have to be crossed in the diagram. As the terminals on the car are marked with the proper numbers no difficulty should arise in properly connecting the gasoline gauge.

2. Stentor Phone Replacement.

The stentor phones in the Imperial and the Fleetwood Town Cars are matched and installed in pairs. Therefore, if the original transmitter and receiver are not kept together the operation of the phone is likely to prove unsatisfactory.

If the signals are weak when it is known that the set is properly matched, the connections should be carefully checked for looseness and the wiring tested out for possible shorts caused by staples and tacks. If, however, replacement is found to be necessary both the transmitter and receiver should be replaced.

3. Corrosion on Terminals

See that the terminals are clean and free from corrosion. The terminals and battery posts should be wiped with a cloth saturated with household ammonia or a solution of water and bicarbonate of soda (cooking soda). These solutions will neutralize any acid that may be present on the parts to be cleaned. Therefore, do not allow any of the solution to get into the cells of the battery.

After the parts are cleaned they should be given a heavy coat of vaseline or heavy grease.

4. Specific Gravity of Battery Solution

Test the specific gravity of the battery solution with a hydrometer.

The specific gravity of a fully charged battery is 1.270 to 1.290 at 60° F. A fully discharged battery has a specific gravity of 1.150 to 1.170 and should be removed from the car for charging.

If the gravity of the battery solution is below 1.250 investigate, if possible, to determine whether or not there has been a recent temporary abnormal demand for current, such as excessive use of the lights or starter. If the low gravity is the result of a temporary abnormal demand, it is possible that the charging rate will be sufficient as it is to bring up the gravity. If the gravity is below 1.250 and there is no evidence of a temporary excessive demand for current, the charging rate should be observed and if low the necessary steps should be taken to increase it.

In any case if the gravity is below 1.225 the battery should be removed and charged.

If any battery solution has been spilled or leaked from the cell it should be replaced with a freshly mixed solution and the battery given an over-charge by charging it from an outside source.

CAUTION: In mixing the acid solution be sure to pour the acid slowly into the water. *Do not pour the water into the chemically pure acid.*

5. Adding Water to Storage Battery

In winter it is sufficient to inspect the level of the battery solution every 1000 miles when the car is lubricated. In summer, however, the battery solution should be inspected every 500 miles or at least every two weeks. Enough water should be added to keep the level of the solution above the tops of the plates and even with the bottom of the filling tubes.

Water for filling the battery must be pure. Distilled water, melted artificial ice or fresh rain water are suitable for this purpose. Do not use water that has come in contact with any metal.

6. Adjustment of Circuit Breaker

The circuit breaker is of the lock-out and vibrating type, the same as on previous cars. The lock-out side protects the horn, inspection lamp, dome lamp, quarter lamps, stop lamp, step lamps and cigar lighter. In case of a ground in any of these circuits, the breaker opens and remains open until the ground is removed.

The remaining lamps including the headlamps are protected by the vibrating circuit breaker. In case of a ground in any of the circuits protected by the vibrating circuit breaker, the breaker will start to vibrate and will continue until the ground is removed.

When 32 candle power bulbs are used in the headlamps the initial rush of the current when the lamps are first turned on sometimes causes the circuit breaker to vibrate a few times. This is only a temporary overload and should not necessitate any adjustments on the circuit breaker.

7. Running Engine with Storage Battery Disconnected

Serious damage will be done to the generator if the engine is run with the battery disconnected unless the generator terminal is grounded. This can be done by using a short wire attached at one end to the front terminal of the cut-out relay and at the other end fastened under one of the cut-out hold-down screws.

8. Generator Thermostat Control

Before engine unit 2-10750 on 303 cars, the generator is of the split-field type, thermostatically controlled. One of the field coils is connected between the third brush and one of the main brushes in the usual manner. The other field coil is connected between the two main brushes and the thermostat is in series with this field. The function of the thermostat is to disconnect this field from the ground as soon as the generator reaches the temperature of 175°F.

Before the thermostat operates, both fields are in use and the out-put of the generator is correspondingly higher. When, as a result of the combined heat of the generator and the engine, the temperature reaches the predetermined point, the thermostat cuts out the field to which it is connected and the generator out-put is reduced.

Beginning with engine unit 2-10750 on 303 cars, both field coils are in series with the thermostat which in turn is in parallel with a resistance. When the thermostat operates, the entire field current is shunted through this resistance with a corresponding reduction of current output.

9. Contact Point Adjustment

There are two sets of contact points, one for the odd-numbered cylinders (1-3-5-7), the others for the even-numbered cylinders (2-4-6-8). The contact arm for the odd-numbered cylinders is mounted on a stationary plate and the ignition for these cylinders is timed by adjusting the cam. The contact arm for the even-numbered cylinders is at an angle of 135° from the other arm and is mounted on a plate which is adjustable for timing these cylinders. The complete timing operation should include both adjustments.

10. Timing Marks

A few early 303 cars have the IG/A mark stamped $1\frac{13}{16}$ inch ahead of dead center instead of $\frac{7}{8}$ inch. On these cars the IG/A marks should be disregarded and the timing should be set $\frac{7}{8}$ inch ahead of the dead-center marks.

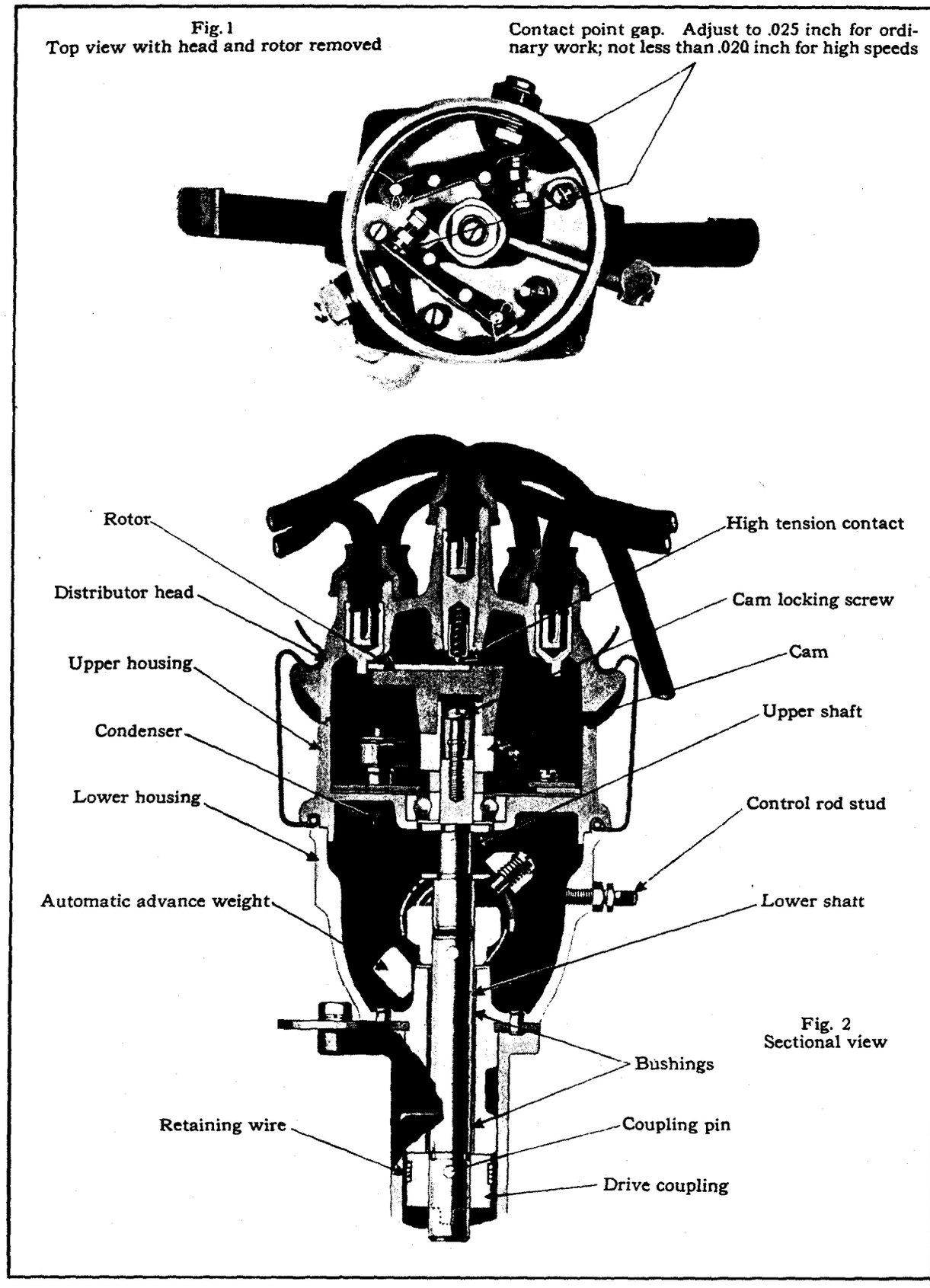

Plate 26: Sectional and Top Views of Distributor.

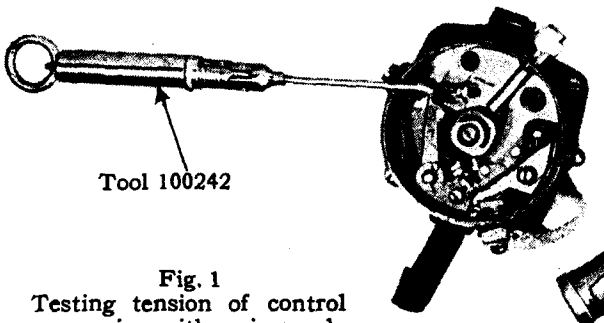

Fig. 1
Testing tension of control arm spring with spring scale

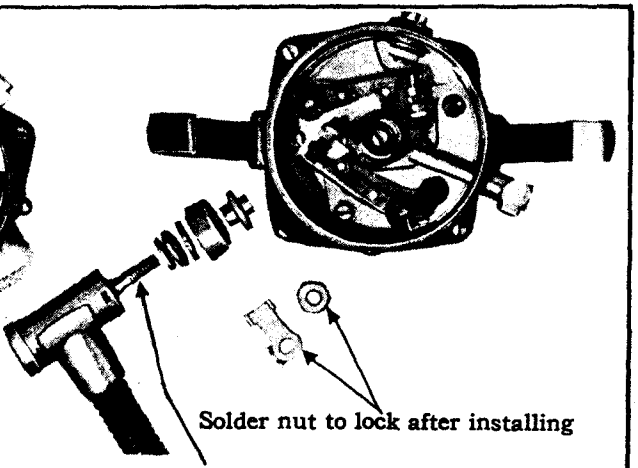

Fig. 2
Showing attachment of electrolock to distributor on Cadillac 341-A and LaSalle 303

Fig. 3

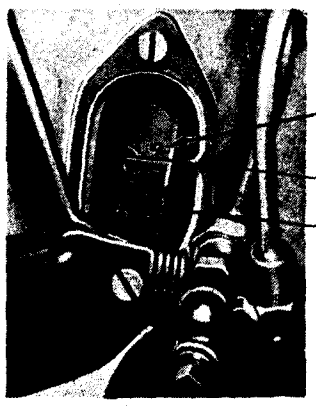

Note: With high-compression cylinder heads on Cadillac 341-A and LaSalle 303, time ignition 1/2-inch ahead of center

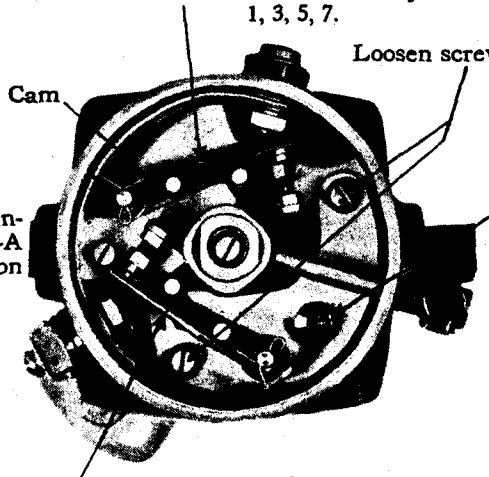

Fig. 4

Note:
Time ignition with hand control lever fully advanced

Fig. 6



Fig. 5

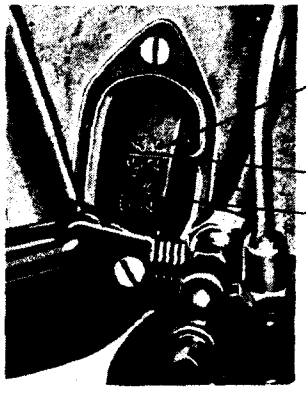

Plate 27. Ignition Timing.

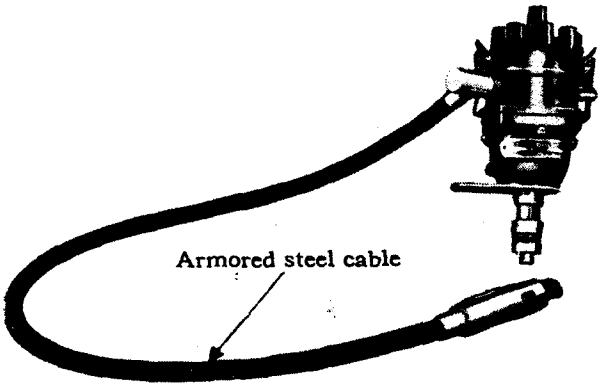

Fig. 1
Electrolock used on Cadillac 341-A and LaSalle 303
For service on distributor, remove Electrolock with distributor or use fixture shown in Plate 27, Fig. 6

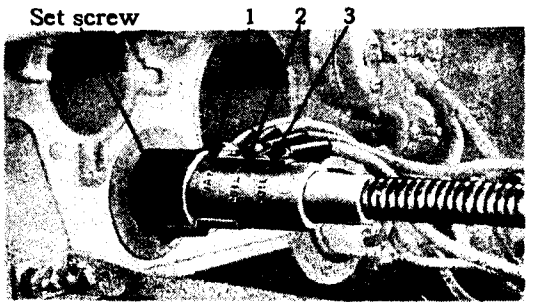

Fig. 2
Electrolock from front of instrument board.
To remove, unlock and take out set screw

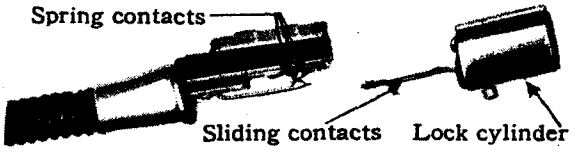

Fig. 3
Electrolock switch with casing and cylinder removed

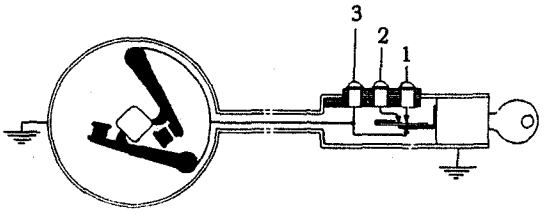

Fig. 4
Electrolock locked.
No current flowing to coil.
Coil and distributor grounded

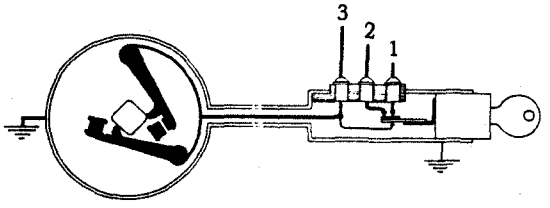

Fig. 5
Electrolock unlocked.
Terminals 1 and 2 connected by contact on slide. Heavy line indicates flow of current

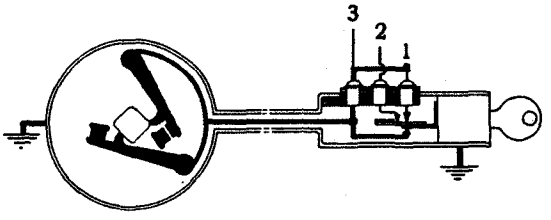

Fig. 6
Never attempt to wire around the Electrolock A "jumper" between terminals 1 and 3 will cause a short, damaging both switch and distributor

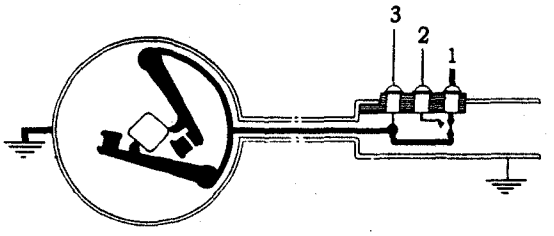

Fig. 7
Never remove the lock cylinder without disconecting the feed wire. No. 1 contact will touch the lower contact and short through the distributor

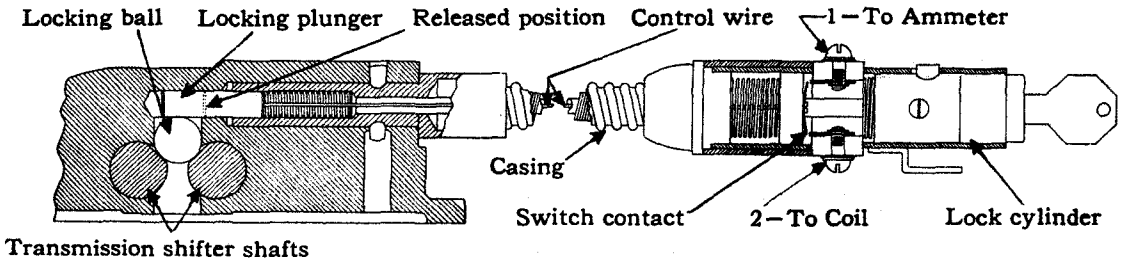

Fig. 8
Transmission lock and ignition switch on Cadillac 341-B and LaSalle 328

Plate 28. Electrolock and dual ignition and transmission lock.

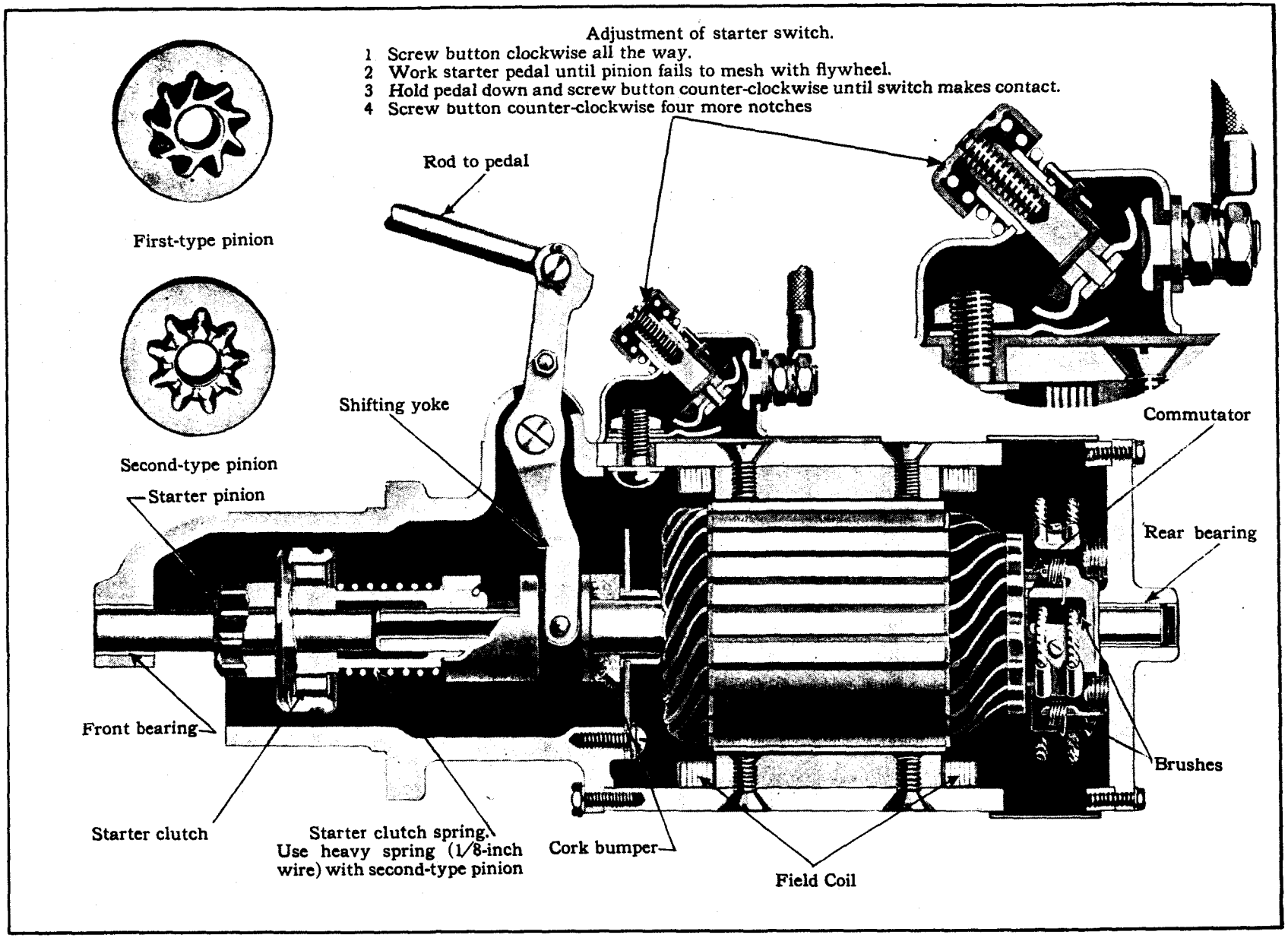

Plate 29. Starting motor details.

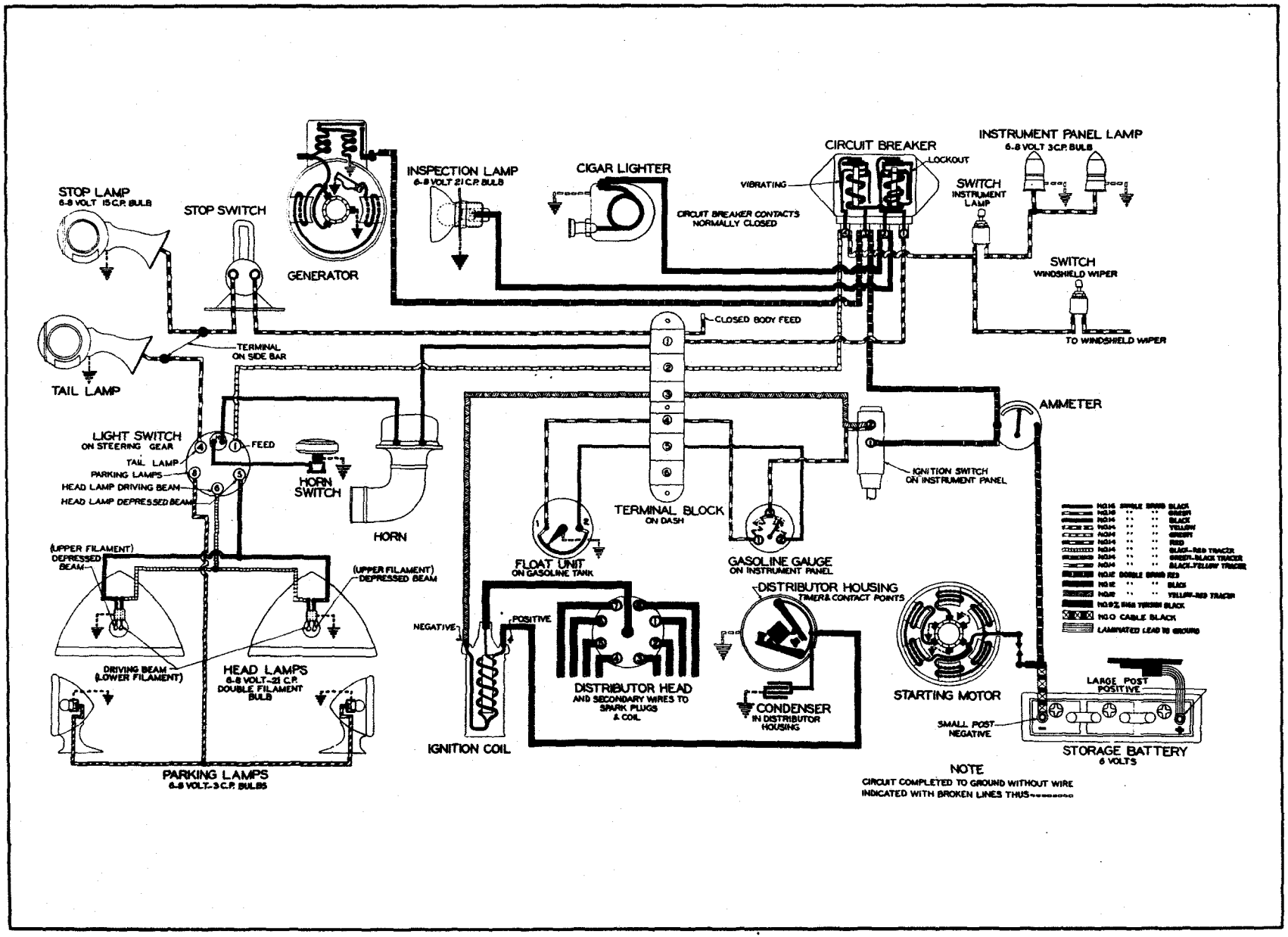

Plate 30. Circuit diagram, Cadillac 341-B.

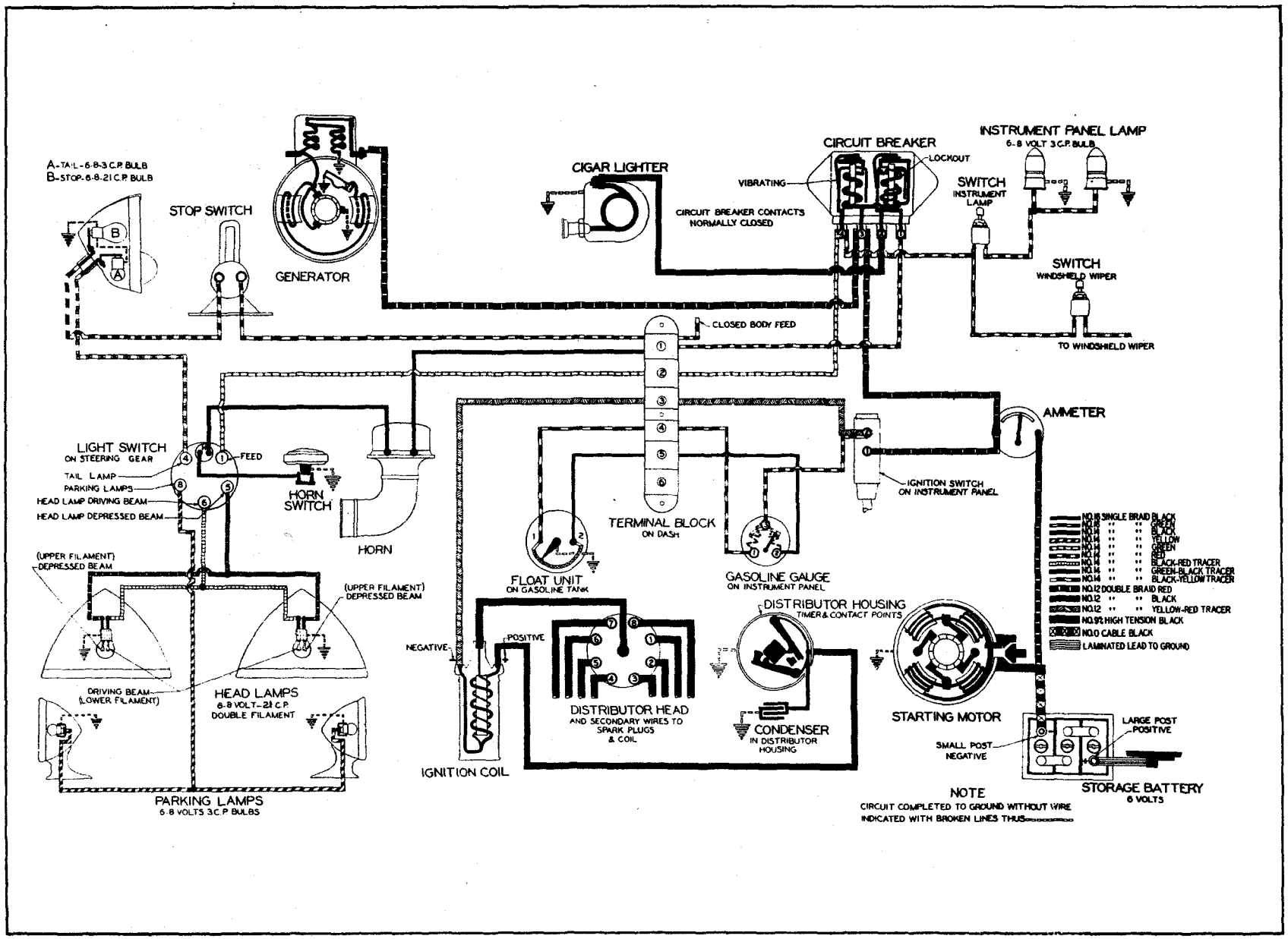

Plate 31. Circuit diagram, La Salle 328.

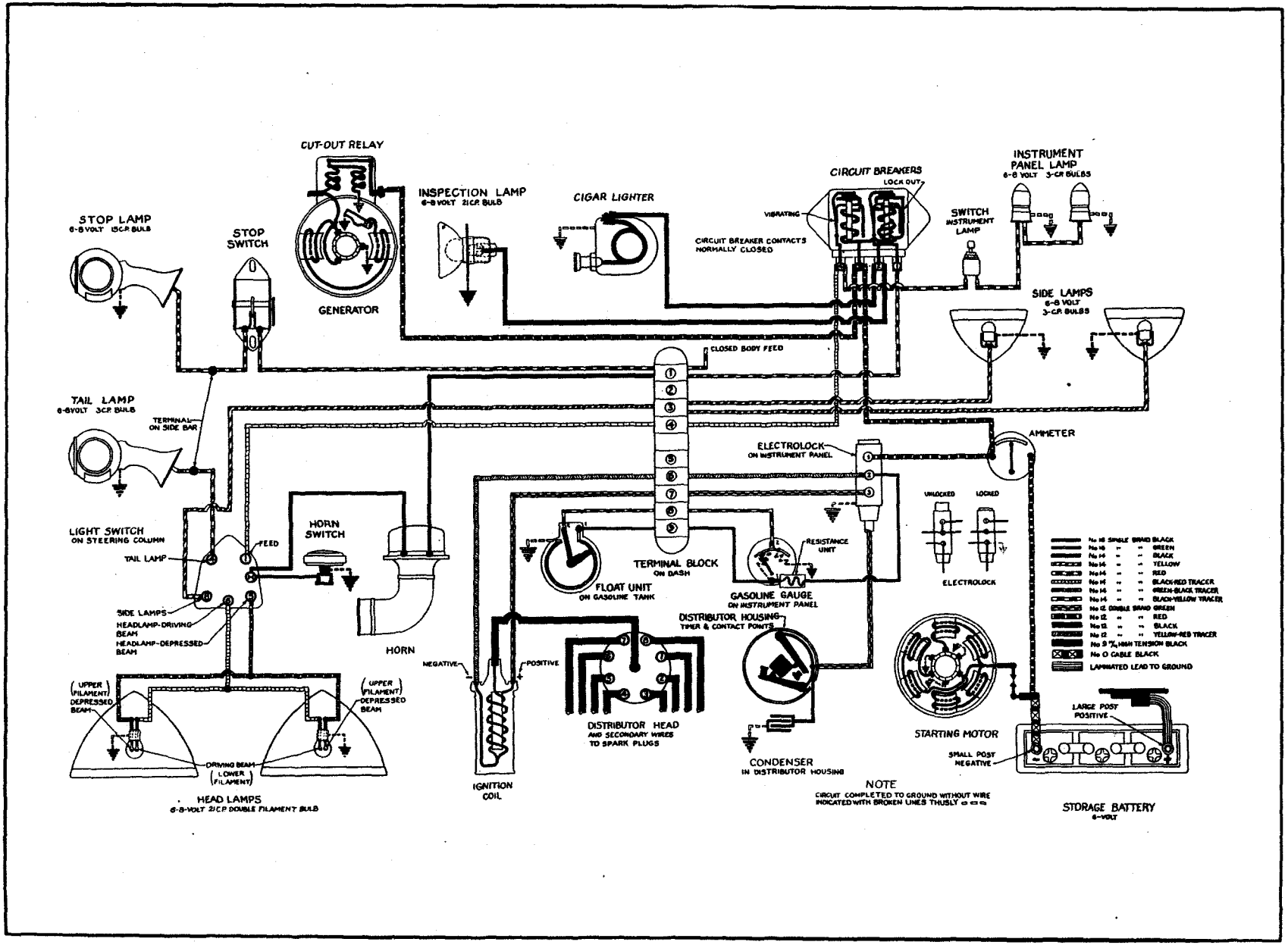

Plate 32. Circuit diagram, Cadillac 341-A.

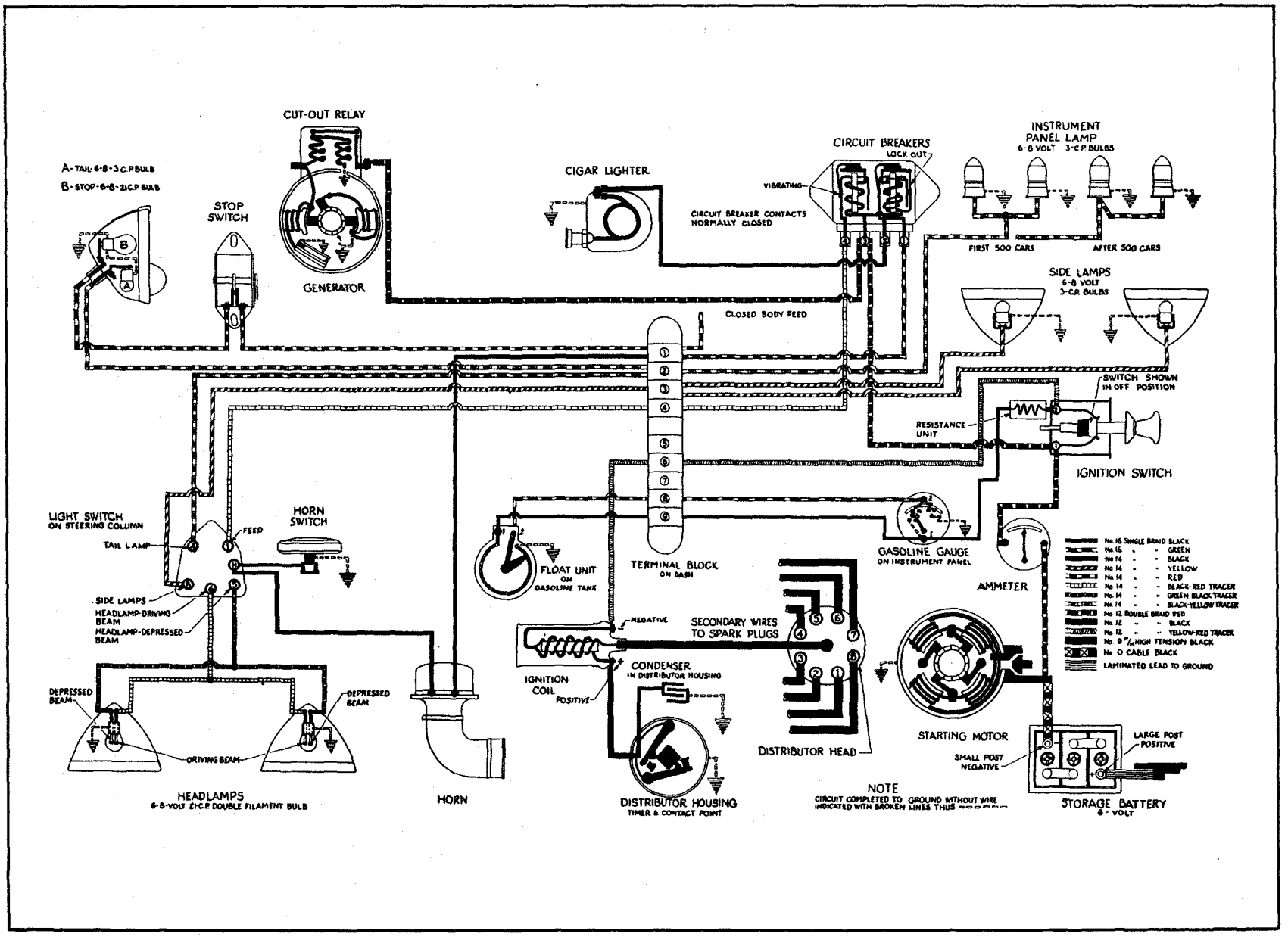

Plate 33. Circuit diagram, La Salle 303—first type.

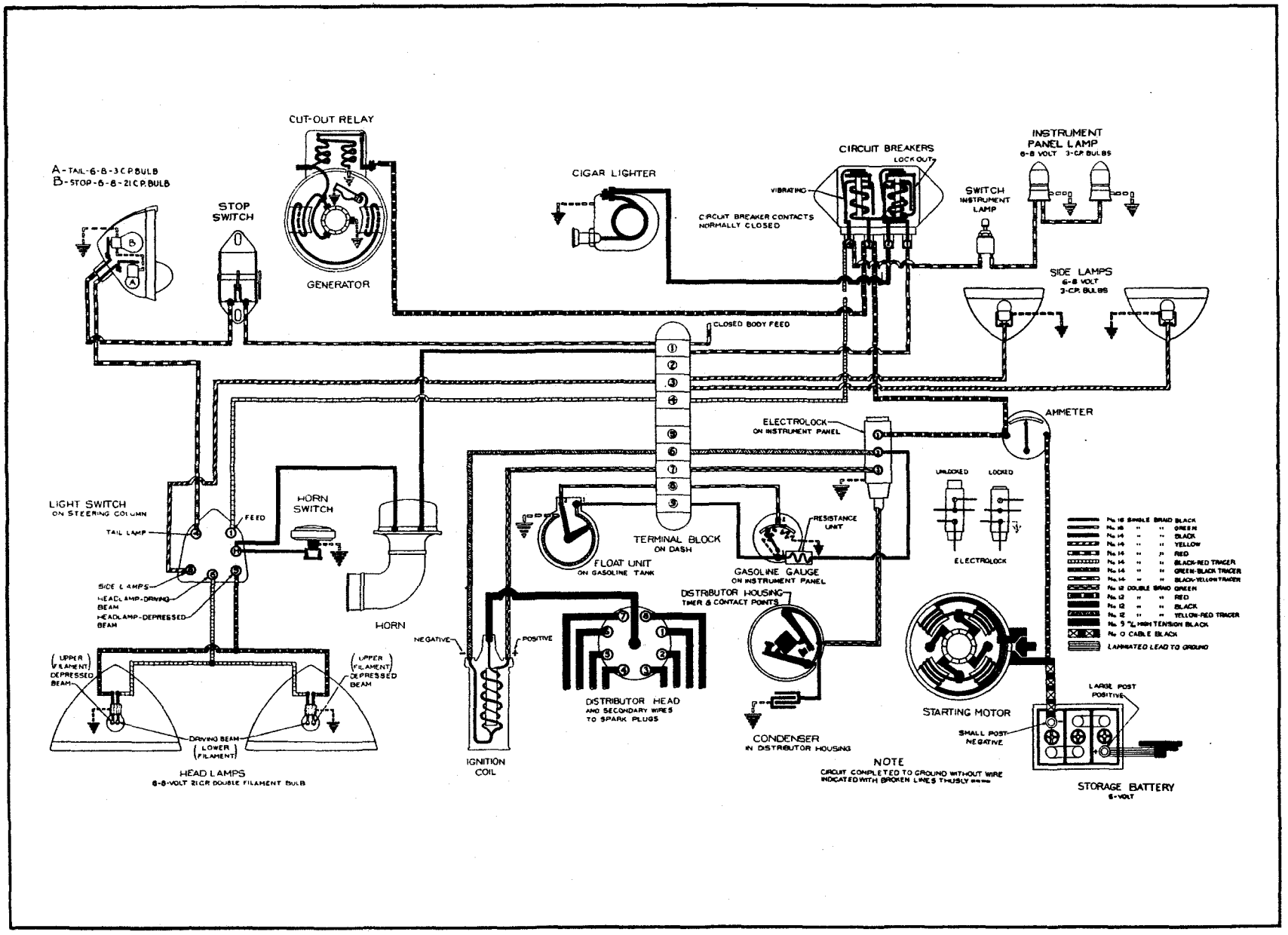

Plate 34. Circuit diagram, La Salle 303—second type.

Engine

Subject	Cadillac 341		LaSalle 303-328		Specifications	Remarks
Bore	A	B	....	....	3 5/16 in.	
	...	...	303	....	3 1/8 in.	
	...	...	....	328	3 1/4 in.	
Compression—						
Average compression pressure, low-compression cylinder heads	A	B	303	328	90-92 lbs. per sq. in. at 1000 R. P. M.	
Average compression pressure, high-compression cylinder heads	A	B	303	328	105-107 lbs. per sq. in. at 1000 R. P. M.	At the elevation of Detroit.
Ratio, low-compression cylinder heads	A	B	303	328	4.8 to 1	Low-compression cylinder heads are standard on 341-A and 303 cars. High-compression cylinder heads are standard on 341-B and 328 cars.
Ratio, high-compression cylinder heads	A	B	303	328	5.3 to 1	
Identification marks—						
Low-compression cylinder heads	A	...	303	....	No characteristic marks.	
High-compression cylinder heads	A	B	303	....	"HC-53"	
	...	...	....	328	"HC-53" "328" at lower edge of head	5.3 to 1 compression ratio.
Horsepower, rated	A	B	....	....	35.0	
	...	...	303	....	31.2	
	...	...	....	328	33.8	
Piston displacement	A	B	....	....	341 cu. in.	
	...	...	303	....	303 cu. in	
	...	...	....	328	328 cu. in.	
Stroke	A	B	303	328	4 11/16 in.	
CAMSHAFT						
Bearing clearance	A	B	303	328	New limits, .0027 to .0037 in. Worn limit, not over .005 in.	
Bearings, out of round	A	B	303	328	Not over .005 in.	
End-play in camshaft	A	B	303	328	New limits, .005 to .015 in. Worn limit, not over .020 in.	
CHAINS						
CAMSHAFT CHAIN						
Adjustment	A	B	303	328	Not adjustable	
No. of links	A	B	303	328	54	
Pitch	A	B	303	328	1/2 in.	
Type	A[1]	...	303[1]	....	645	Before engine unit 3-10155 on 341-A cars and 2-17156 on 303 cars.
	A[2]	B	303[2]	328	B-45	Beginning with engine unit 3-10155 on 341-A cars and 2-17156 on 303 cars.
Width	A	B	303	328	1 3/4 in.	
GENERATOR AND WATER PUMP CHAIN						
Adjustment	A	B	303	328	1/8 in. measured at top of sprocket housing	See Note 3 in Cooling System Group, Page 43. *Plate 36, Fig. 3.*
No. of links	A	B	303	328	57	
Pitch	A	B	303	328	1/2 in.	
Type	A	B	303	328	B-45	

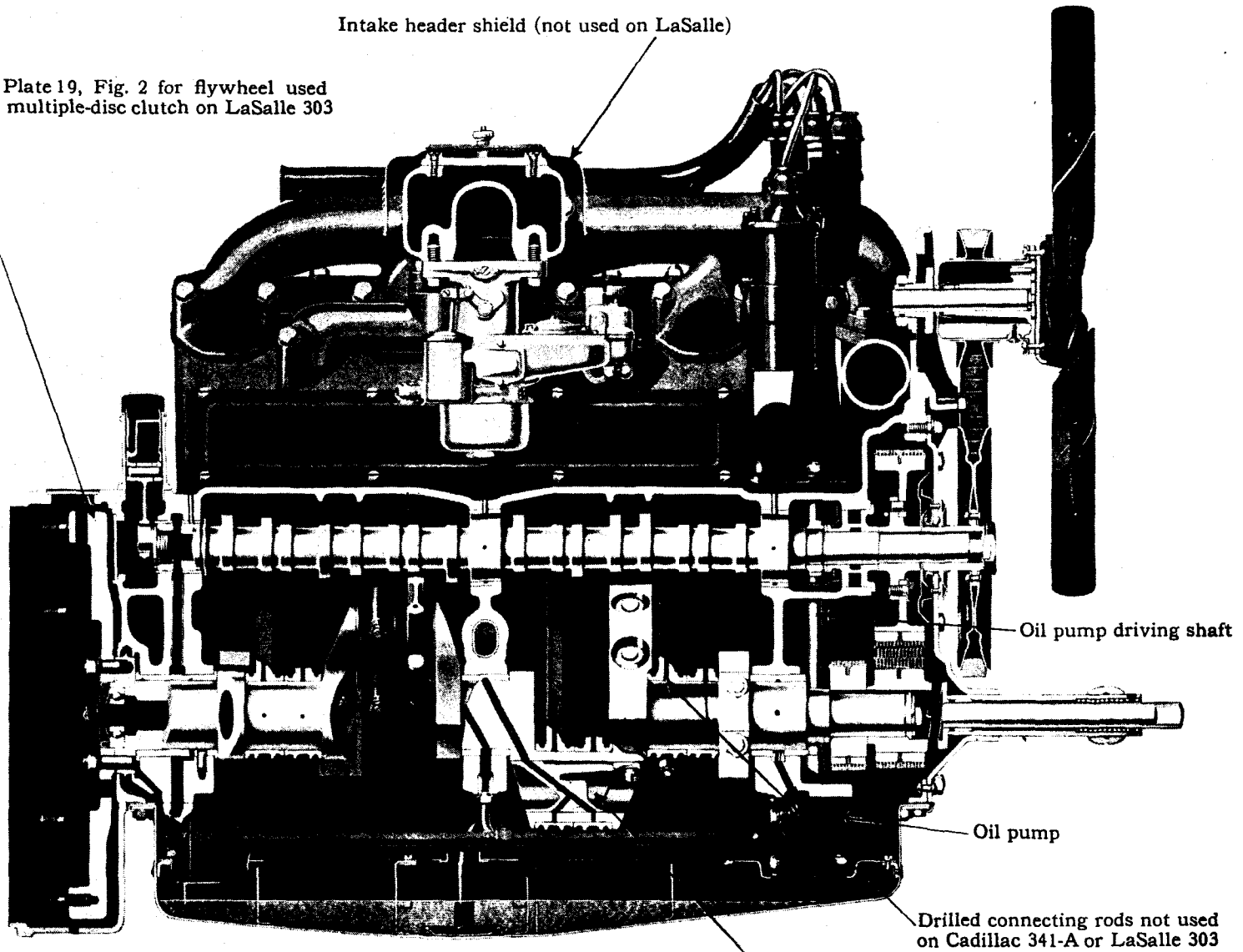

Plate 35. Sectional view of engine.

Subject	Cadillac 341		LaSalle 303-328		Specifications	Remarks
Width	A	B	303	328	1¼ in.	
CONNECTING RODS						
Alignment	A	B	303	328		See Note 1.
Assembly	A	B	303	328		See Note 2.
Center to center length			303[1]		10 in.	Before engine unit 2-13001.
	A	B	303[2]	328	10½ in.	Beginning with engine unit 2-13001 on 303 cars.
Clearance between bushing and piston pin	A	B	303	328		See note 6.
Clearance between lower bearing and crankpin	A	B	303	328	New limits, .001 to .0025 in. Worn limit, not over .006 in.	See note 3.
End-play of lower bearing	A	B	303	328	New limits, .008 to .012 in. Worn limit, not over .015 in.	
CRANKSHAFT AND MAIN BEARINGS						
Crankpin diameter	A	B	303	328	2⅜ in.	
Crankpin journals, out of round	A	B	303	328	New limit, .0002 in. Worn limit, not over .004 in.	
End play of crankshaft	A	B	303	328	New limits, .002 to .004 in. Worn limits not over .010 in.	
Length of crankshaft, over all	A	B	303	328	28¼ in.	
Length of crankshaft, front to rear bearing, inclusive	A	B	303	328	23 $\frac{23}{32}$ in.	
Main bearing clearance	A	B	303	328	New limits, .001 to .002 in. Worn limit, not over .004 in.	See note 4.
Main bearing journals, diameter	A	B	303	328	2⅜ in.	
Main bearing, out of round	A	B	303	328	New limit, .0002 in. Worn limit, not over .005 in.	
ENGINE LUBRICATION						
Crankcase oil capacity	A	B	303	328		See capacities in Lubrication Table, Page 83.
Thinning lubricant with kerosene	A	B	303	328		See Lubrication Table, Page 83.
OIL FILTER						
Cartridge, replacement of	A	B	303	328	12,000 miles	Oil pan and screen should also be removed and cleaned.
Cartridge, type	A	B	303	328	A. C. Type B-3	
Valve spring, compression	A		303		6 ozs. at $\frac{5}{8}$ in.	If spring is weak, correct by stretching to $\frac{11}{16}$—$\frac{23}{32}$ in. A few later cars do not have the check valve.
OIL PUMP						
Backlash between spiral drive gears	A	B	303	328	Not over .018 in.	
Clearance between bushing and drive shaft	A	B	303	328	New limits, .001—.0025 in. Worn limit, not over .010 in.	
Clearance between bushing in idler gear and shaft	A	B	303	328	New limits, .001—.0025 in. Worn limit, not over .005 in.	
Clearance between outside diameter of gears and pump body	A	B	303	328	New limits, .003—.005 in. Worn limit, not over .008 in.	
End play in pump gears	A	B	303	328	New limits, .004—.009 in. Worn limit, not over .020 in.	

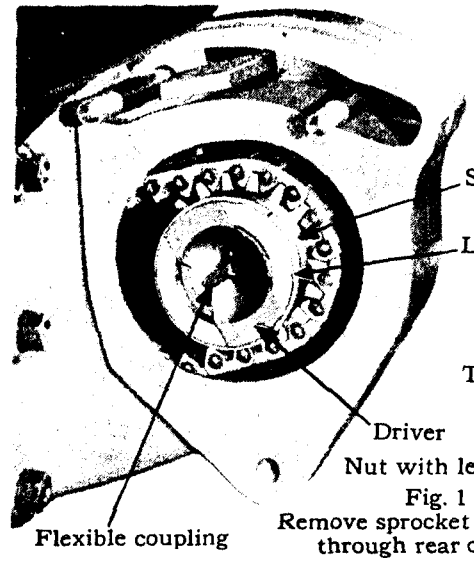

Fig. 1
Remove sprocket and driver through rear opening

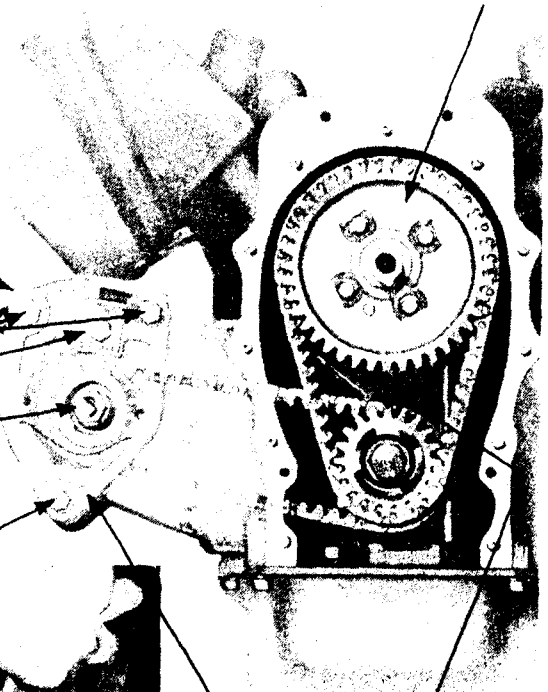

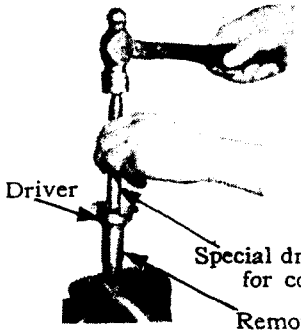

Fig. 2
Removing shaft and flexible couplings from driver

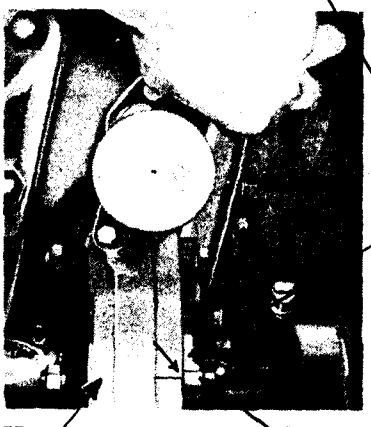

Fig. 3
Front end chains

To adjust chain, loosen pivot screw and through-bolts, force support over until chain is tight, then slack off 1/8 inch

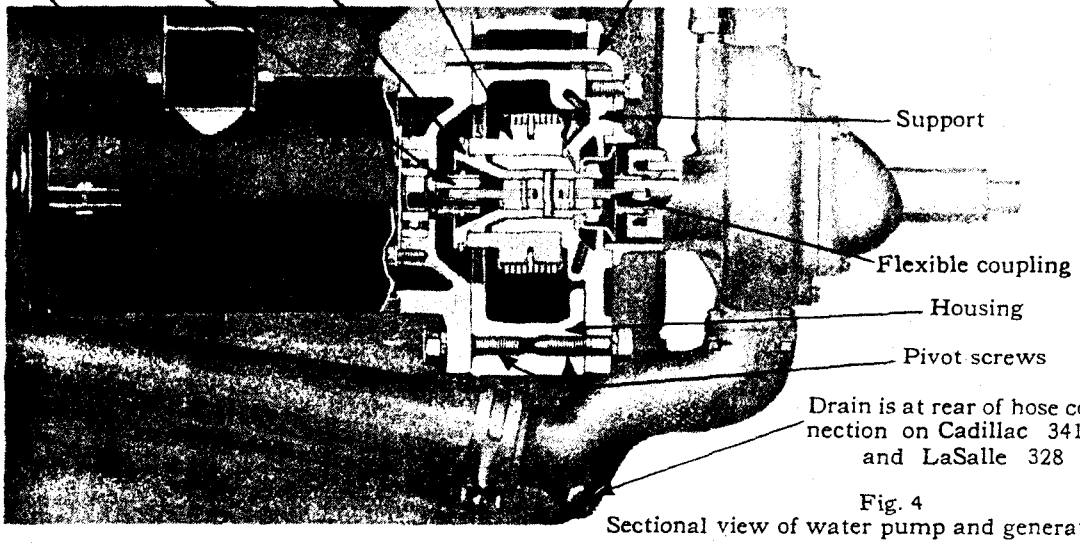

Fig. 4
Sectional view of water pump and generator drive

Plate 36. Water pump and generator drive.

Subject	Cadillac 341		LaSalle 303-328		Specifications	Remarks
End play in spiral drive gear.	A	B	303	328	New limits, .005—.015 in. Worn limit, not over .020 in.	
Thickness of pump cover gasket	A	B	303	328	.009—.011 in.	
PRESSURE REGULATOR						
Adjustment	A[1]	...	303[1]	....	By-pass adjusting screw	Before engine unit 3-10979 on 341-A cars and 2-17542 on 303 cars.
	A[2]	B	303	328	No adjustment necessary	Beginning with engine unit 3-10979 on 341-A cars and 2-17542 on 303 cars.
Clearance between plunger and housing	A	B	303	328	New limits, .003—.006 in. Worn limit, not over .008 in.	
Normal pressure	A	B	303	328	5-10 lbs. at idling speed	
Plunger valve opens	A	B	303	328	20 lbs.	
Spring, free length	A	B	303	328	1¾ in.	
Spring, compression	A	B	303	328	2 lb. at 1 5/16 in.	
PISTONS AND CYLINDERS						
Cylinder bore, out of round	A	B	303	328	New limit, .0005 in. Worn limit, not over .002 in.	
Piston, out of round	A	B	303	328	New limit, .0005 in. Worn limit, not over .002in.	
Piston clearance at top land	A	B	303	328	.015 in. minimum	
Piston clearance at skirt	...	...	303	....	New limit, .0025 in.	See note 5.
	A	B	....	328	New limit, .003 in.	
Limits on cylinder bore, standard	A	B	....	....	3.3125—3.3145 in.	The four bores of the same cylinder block are held within .0005 in. of each other.
	...	...	303	....	3.125—3.127 in.	
	...	...	....	328	3.2500—3.2520 in.	
Limits on cylinder bore	A	B	303	328	.....	Oversize Cylinders are honed to fit the pistons with which they are supplied.
Limits on pistons—						
Standard No. 1	A	B	....	....	3.309—3.3095 in.	Marked U1, U2, U3 and U4, respectively.
No. 2	A	B	....	....	3.3095—3.310 in.	
No. 3	A	B	....	....	3.310—3.3105 in.	
No. 4	A	B	....	....	3.3105—3.311 in.	
Standard No. 1	...	...	303	....	3.1222—3.1227 in.	First type with ¾ in. piston pin hole marked P1, P2, etc. Second type with ⅞ in. piston pin hole marked V1, V2, etc.
No. 2	...	...	303	....	3.1227—3.1232 in.	
No. 3	...	...	303	....	3.1232—3.1237 in.	
No. 4	...	...	303	....	3.1237—3.1242 in.	
No. 5	...	...	303	....	3.1242—3.1247 in.	
No. 6	...	...	303	....	3.1247—3.1252 in.	
No. 7	...	...	303	....	3.1252—3.1257 in.	
Standard No. 1	...	...	....	328	3.2455—3.2460 in.	Marked AA1, AA2, etc.
No. 2	...	...	....	328	3.2460—3.2465 in.	
No. 3	...	...	....	328	3.2465—3.2470 in.	
No. 4	...	...	....	328	3.2470—3.2475 in.	
Oversize—						
+.005	A	B	....	....	3.314—3.315 in.	Marked +.005
	...	...	303	....	3.1272—3.1288 in.	
	...	...	....	328	3.2505—3.2515 in.	
+.010	A	B	....	....	3.319—3.320 in.	Marked +.010
	...	...	303	....	3.1322—3.1332 in.	
	...	...	....	328	3.2555—3.2565 in.	
+.015	A	B	....	....	3.324—3.325 in.	Marked +.015
	...	...	303	....	3.1372—3.1382 in.	
	...	...	....	328	3.2605—3.2615 in.	

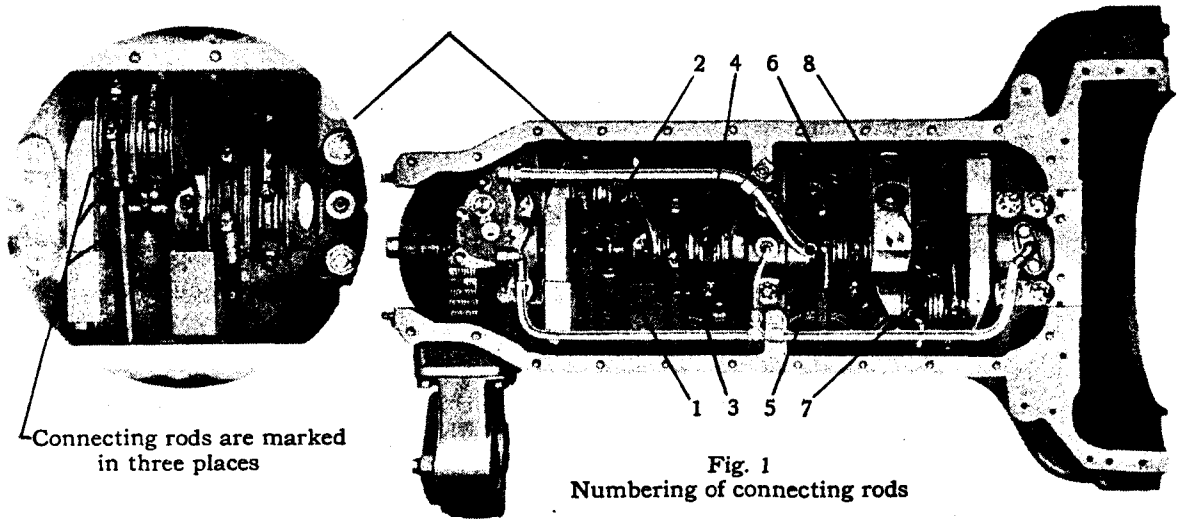

Fig. 1
Numbering of connecting rods

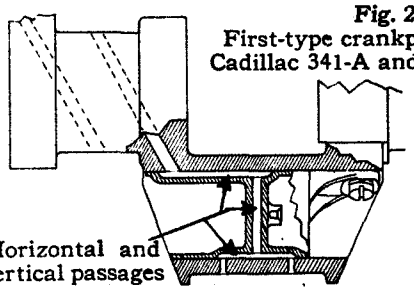

Fig. 2
First-type crankpin oil plugs.
Cadillac 341-A and LaSalle 303

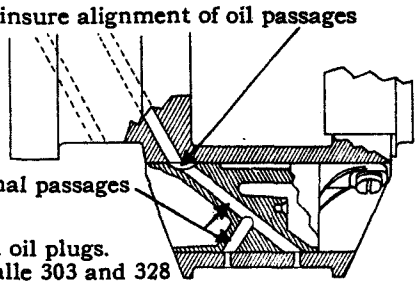

Fig. 3
Second-type crankpin oil plugs.
Cadillac 341-A and B, LaSalle 303 and 328

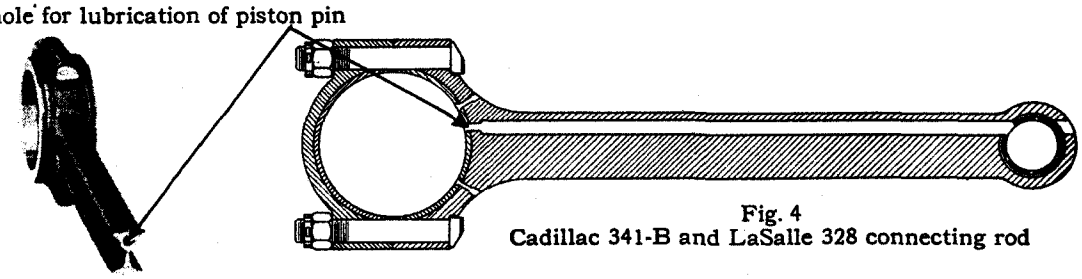

Fig. 4
Cadillac 341-B and LaSalle 328 connecting rod

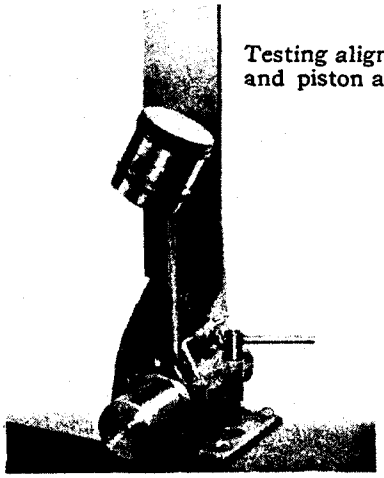

Fig. 5
Testing alignment of connecting rod and piston assembly on tool 109214

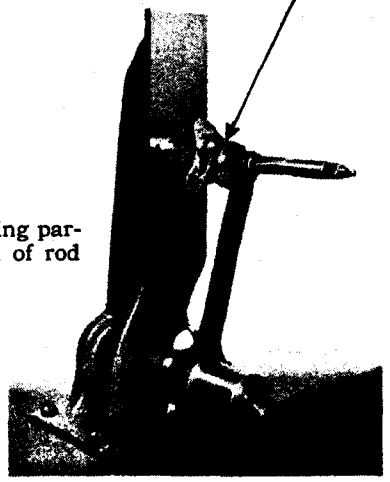

Fig. 6
Reaming piston pin bushing parallel to hole in large end of rod

Plate 37. Connecting rod details.

Subject	Cadillac 341		LaSalle 303-328		Specifications	Remarks
+.020	A	B	....	....	3.329—3.330 in.	
	...	...	303	....	3.1422—3.1432 in.	Marked +.020
	...	...	....	328	3.2655—3.2665 in.	
+.030	A	B	....	....	3.339—3.340 in.	
				328	3.2755—3.2765 in.	Marked +.030
+.031	...	...	303	....	3.1532—3.1542 in.	Marked +.031
PISTON PINS						
Diameter	...	...	303[1]	....	¾ in.	Before engine unit 2-13001
	A	B	303[2]	328	⅞ in	Beginning with engine unit 2-13001 on 303 cars.
Clearance between pin and bushing	A	B	303	328	.....	See note 6.
Clearance between pin and piston	A	...	303	....	Hand press fit	
	...	B	....	328	100 to 600 lbs. press fit on lock screw end (hand push fit on opposite end)	See note 7.
Identification marks	A	...	303	....	No characteristic marks.	
	...	B	....	328	60° notch .015 in. deep on end opposite lock screw.	Piston pins for 341-A engines must not be installed in 328 engines as they will score the cylinders. *Plate 40, Fig. 2*
Lubrication	A	...	303	....	Splash	
	...	B	....	328	Pressure feed through hole drilled in connecting rod.	
PISTON RINGS						
Clearance between piston rings and grooves in piston	A	B	303	328	New limits, .0015—.0025 in. Worn limit, not over .004 in.	
Gap clearance	A	B	....	328	New limits, .008—.018 in. Worn limit, not over .025 in.	
	...	...	303	....	New limits, .005—.015 in. Worn limit, not over .025 in.	
Number of compression rings	A	B	303	328	2	
Number of oil rings	A	B	303	328	1	
Ring installation	...	...	303[1]	....	All rings above piston pin	Before engine unit 2-6918.
	A	B	303[2]	328	2 comp. rings above pin 1 oil ring below pin	Beginning with engine unit 2-6918 on 303 cars.
Width of rings	A	B	303	328	$\frac{3}{16}$ in.	
VALVES						
Clearance between valve lifter and guide	A	B	303	328	New limits, .0015—.002 in. Worn limit, not over .005 in.	
Clearance between valve lifter roller and pin	A	B	303	328	New limits, .0015—.0025 in. Worn limit, not over .004 in.	
Spring compression, valve closed	A	B	303	328	77-81 lbs. at 2.5 in.	Before engine unit 3-14057 on 341-A cars and 2-20272 on 303 cars compression pressure was 133-139 lbs. with spring compressed to 2.148 in.
Spring compression, valve open	A	B	303	328	156-164 lbs. at 2.148 in.	
Spring type	A[1]	...	303[1]	....	Straight	Before engine unit 3-14057 on 341-A cars and 2-20272 on 303 cars.
	A[2]	B	303[2]	328	Conical	Beginning with engine unit 3-14057 on 341-A cars and 2-20272 on 303 cars. Conical Springs should be installed with large end at bottom.

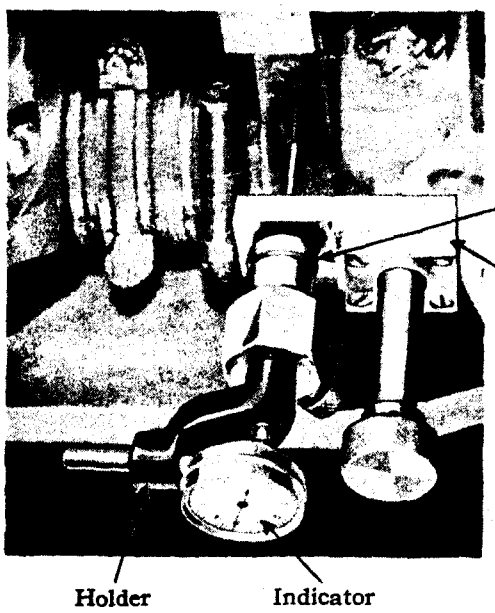

Fig. 1
Indicating clearance in front main bearing.
Use adapters A and B with holder 65530
(Use adapter A only for center main bearing)

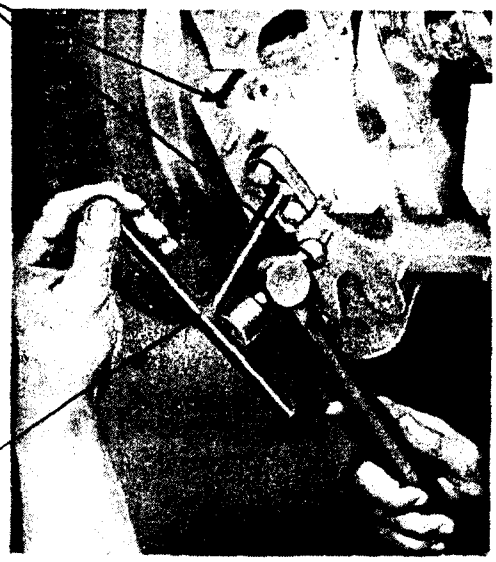

Fig. 2
Removing rear main bearing
cap with puller 109406

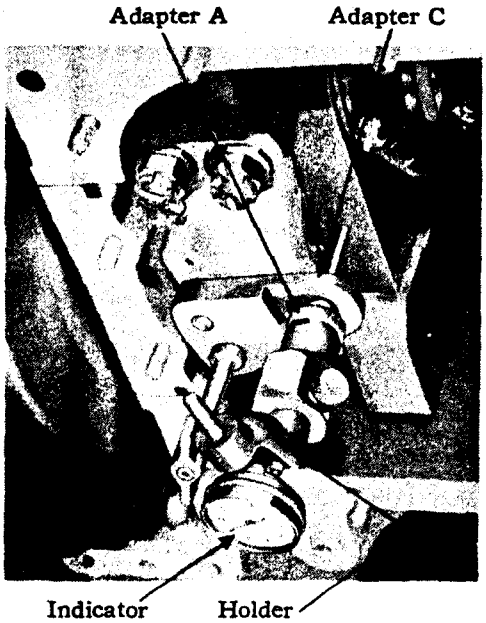

Fig. 3
Indicating clearance in rear main bearing.
Use adapters A and C with holder 65530

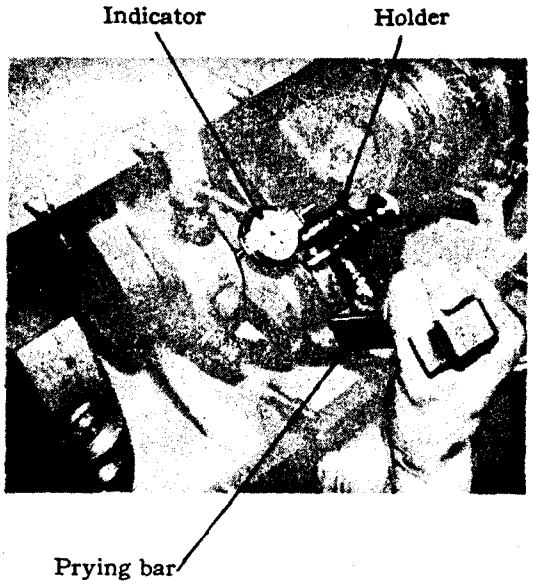

Fig. 4
Indicating clearance in connecting rod bearing.
Holder 109414, prying bar 109415

Plate 38. Indicating bearing clearance.

Subject	Cadillac 341		LaSalle 303-328		Specifications	Remarks
INLET VALVES						
Clearance between stem and guide in cylinder blocks	A	B	303	328	New limits, .001 to .0035 in. Worn limit, not over .006 in.	
Clearance between stem and valve lifter	A	B	303	328	.004 in.	Adjust when engine is cold.
Head diameter	A	B	303	328	1.660—1.666 in.	
Lift	A	B	303	328	$\frac{23}{64}$ in.	
Seat, angle of	A	B	303	328	30°	
Seat, width of	A	B	303	328	$\frac{1}{16}$ in.	
Stem diameter	A	B	303	328	$\frac{3}{8}$ in.	
Stem length	A	B	303	328	6 $\frac{3}{32}$ in. from seat	
EXHAUST VALVES						
Clearance between stem and guide in cylinder block	A	B	303	328	New limits, .002 to .0045 in. Worn limit, not over .006 in.	
Clearance between stem and valve lifter	A	B	303	328	.006 in.	Adjust when engine is cold.
Head diameter	A	B	303	328	1.634—1.640 in.	
Lift	A	B	303	328	$\frac{23}{64}$ in.	
Angle of seat	A	B	303	328	45°	
Seat, width of	A[1]	...	303[1]	....	$\frac{1}{16}$ in.	Before engine unit 3-5809 on 341-A cars and 2-15992 on 303 cars.
	A[2]	B	303	328	$\frac{5}{64}$ in.	Beginning with engine unit 3-5809 on 341-A cars and 2-15992 on 303 cars.
Stem diameter	A	B	303	328	$\frac{3}{8}$ in.	
Stem length	A	B	303	328	6$\frac{1}{8}$ in. from seat	
VALVE TIMING						
Intake valve, opens	A	B	303	328	9½° before top dead center	See note 8.
Intake valve, closes	A	B	303	328	58½° after bottom dead center	
Exhaust valve, opens	A	B	303	328	46° before bottom dead center	
Exhaust valve, closes	A	B	303	328	5° after top dead center	

1. Straightening Connecting Rods

La Salle and Cadillac connecting rods are of alloy steel of such toughness that it is not entirely satisfactory to align them by straightening. If attempt is made to straighten a rod it is apt to return sooner or later to its original shape.

In manufacture, the piston pin bushing is bored in a fixture which insures perfect parallelism between the hole in the large end of the rod and the hole bored in the bushing.

In service, the same thing can be accomplished by reaming on the special fixture which is provided for this purpose. (Tool Numbers 109214-5-6).

If straightening is resorted to, care must be taken to bend or twist the rod farther than necessary to align it and then spring the rod back in the original direction until it is straight. This procedure helps to "normalize" the strains in the steel and prevent further distortion from taking place.

2. Assembly of Connecting Rods

The following points should be checked when installing connecting rods:

1. The chamfered face of the bearings should be toward the end of the crankpin, the plain faces toward each other.

2. The numbers on the rods should be toward the bottom of the engine.

3. The oil holes in the rods should point toward the pistons.

4. The numbers on the caps should correspond to the numbers on the rods.

3. Connecting Rod Bearings

The connecting-rod bearing clearance should be measured with a dial indicator using the fixture designed for the purpose. (Tool Number 109414).

The connecting rod bearings are not separate parts but are cast in place in the connecting rod by a special process. The bearings are not adjustable and no attempt should be made to dress down the cap on the rod to take up the clearance. When a connecting rod bearing clearance exceeds the prescribed amount the rod should be removed and replaced with a rebabbitted rod. Rebabbitting of rods should not be attempted outside the factory. Rods should be returned to the factory and exchanged for rebabbitted rods. Rods, the caps of which have been dressed down, will not be exchanged.

4. Main Bearings

It is recommended that main bearing clearance be in-

dicated with a dial indicator using the special fixture supplied for the purpose. (Tool Number 65530).

No shims or liners are used under the main bearing caps and no attempt should be made to take up the bearings to compensate for wear. When worn enough to require it, the bearings should be replaced. Replacement bearings are furnished to exact size and do not require reaming or scraping.

Special attention is required when removing or installing the rear main bearing cap because the sides of this cap must be oil tight. For this purpose, wood plugs are driven into grooves in the cap when it is installed. To remove the cap a special puller is necessary. New wood plugs must then be installed after the cap is put back.

5. Piston Clearance

The piston clearance should be measured with feeler ribbons. A feeler ribbon .003-inch thick and ¼ to ½-inch wide should be used on Cadillac 341-A and B and La Salle 328 engines. On La Salle 303 engines, a feeler ribbon .0025-inch thick preferably ¼-inch wide, should be used. The meaurement should be taken at the skirt of the piston and at right angles to the piston pin with the piston midway between the top and bottom of the cylinder bore.

To measure accurately with feeler ribbons, consideration must be given to the pull required to withdraw the ribbon. The pull required for both the .0025-inch and the .003-inch ribbons should be between 2½ and 5 lbs. This test must be made with no oil on either the cylinder or piston. It is also very essential that the piston be not more than .0005-inch out of round at the skirt.

6. Fitting Piston Pins in Bushings

The recommended test for piston pin fit on engines with all three rings above the piston pin (first type on La Salle) is to hold the piston and rod assembly by the piston in a horizontal position. The connecting rod should then just drop of its own weight.

On engines with the oil ring below the piston pin, test by spinning the piston pin in the bushing perfectly dry. The pin should be free enough to spin but should have no perceptible looseness.

Piston pin bushings should preferably be reamed in the special aligning and reaming fixture furnished for the purpose.

7. Fitting Piston Pins in Pistons

The present practice in manufacture is to make one end of the piston pin a tight press fit in the side of the piston with the locking screw and the other end a hand press fit to allow for expansion. In service it is customary to fit both ends of the piston pin the same, which should allow a hand press fit. In other words, it should be just possible to push the pin into the piston by pressing with both thumbs on the end of the pin.

CAUTION: When removing and installing the piston pins always place the locking screw side of the piston pin down so that the pressure on the pin will not force the piston out of round.

8. Valve Timing

Because of the shape of the cams, the exact time of opening and closing of the valves depends upon the valve stem clearance and may vary as much as 10 degrees. The accompanying figures are actual readings taken on a cold engine.

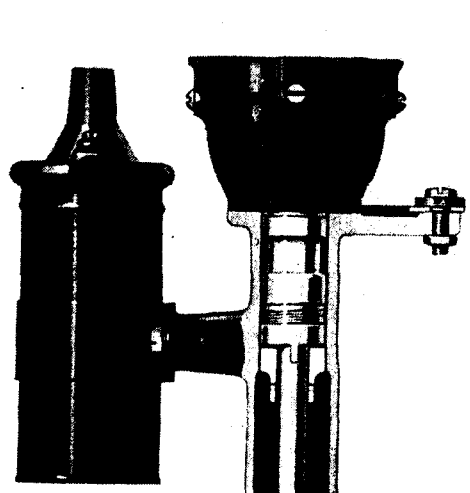

Fig. 1
Sectional view of oil pump and distributor drive

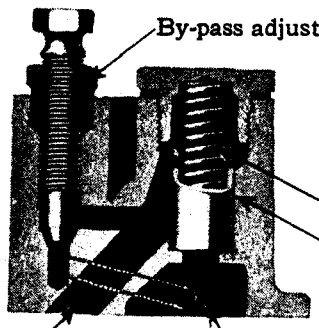

Fig. 2
Sectional view of oil pressure regulator, first type, with adjusting screw

Fig. 3
Sectional view of oil pressure regulator, second type

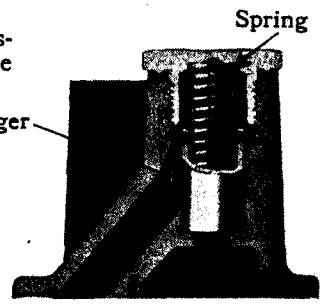

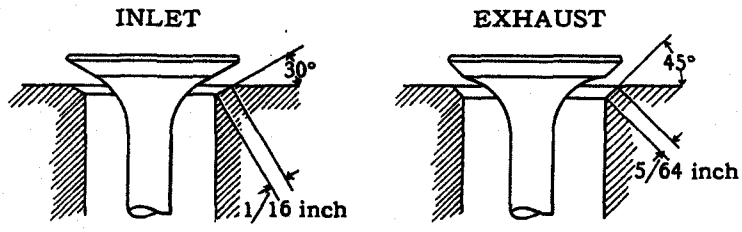

Fig. 4
Width and angle of valve seat

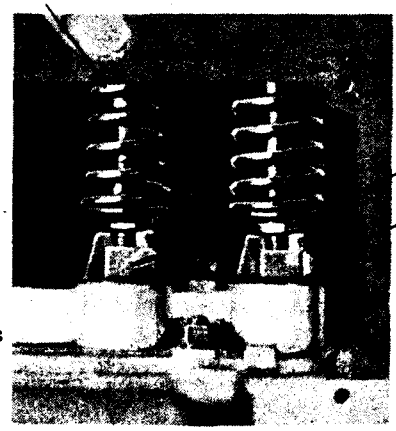

Fig. 5
Valve stem clearance adjustment

Plate 39. Oil pump, pressure regulator and valves.

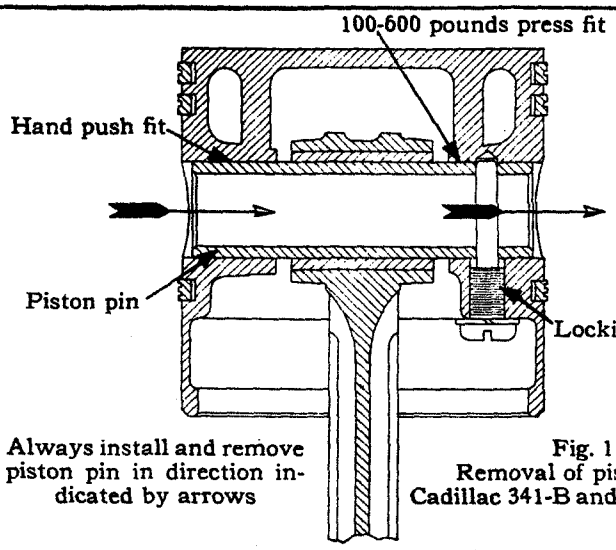

Always install and remove piston pin in direction indicated by arrows

Fig. 1
Removal of piston pin.
Cadillac 341-B and LaSalle 328

Piston pins for Cadillac 341-A engines must not be installed in LaSalle 328 engines

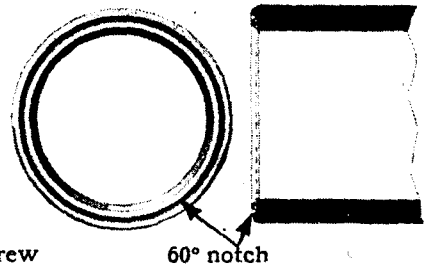

Fig. 2
Enlarged view showing identification marks on LaSalle 328 piston pins

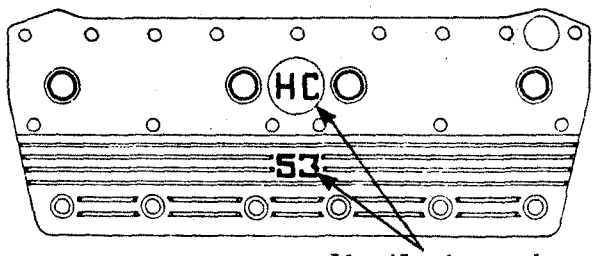

Fig. 3
High-compression cylinder head markings

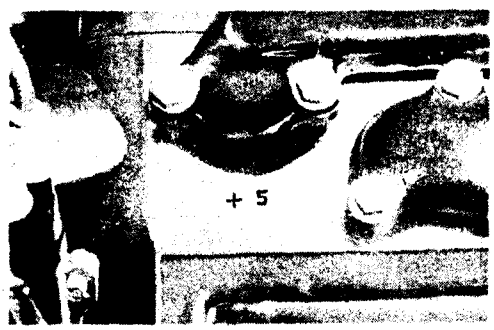

Fig. 4
Cylinder block showing location of oversize marking

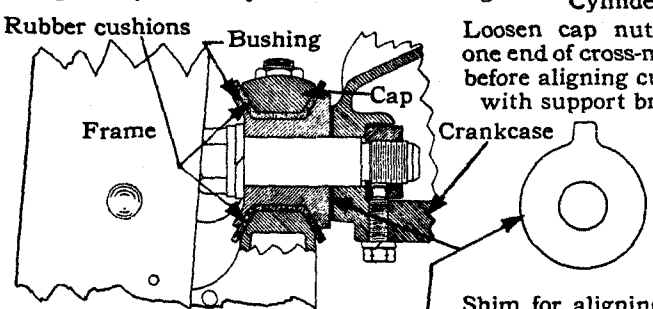

Fig. 5
Sectional view of engine support.
Cadillac 341-A

Loosen cap nuts on one end of cross-member before aligning cushions with support bracket

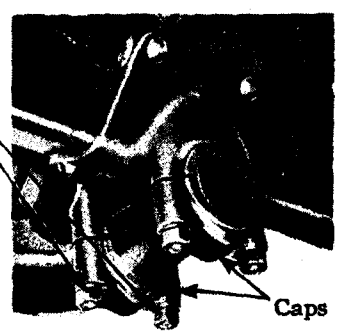

Fig. 6
Tubular cross-member under transmission.
Cadillac 341-A

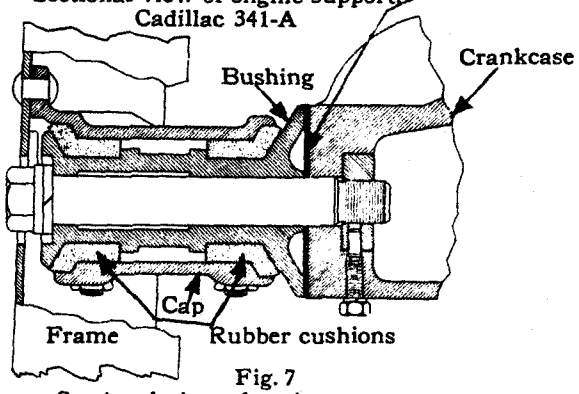

Fig. 7
Sectional view of engine support.
Cadillac 341-B and LaSalle 328

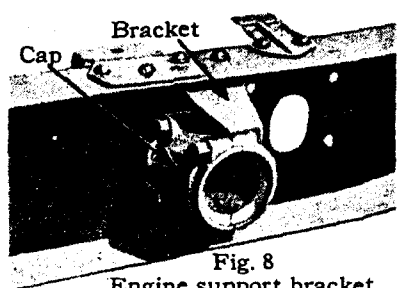

Fig. 8
Engine support bracket.
Cadillac 341-B and LaSalle 328

Plate 40. Cylinder head, piston pin and engine rear support.

Frame

Subject	Cadillac 341		LaSalle 303-328		Specifications	Remarks
Wheelbase	A	B	....	....	140 in. and 152 in.	Chassis with 152-in. wheelbase are intended primarily for commercial type bodies such as ambulances, etc.
	....	....	303	328	125 in. and 134 in.	
Overall length of car	A	B	....	....	213¼ in., 140 in. wheelbase	
	....	....	303	328	185 in., 125 in. wheelbase	
					196⅝ in., 134 in. wheelbase	
Overall width of car	A	B	....	....	73½ in., 140 in. wheelbase.	
	....	....	303	328	71 in., 125-134 in. wheelbase.	
FRAME						
Depth	A	....	....	....	7 9/16 in.	Measured at deepest part of frame.
	....	....	303	....	6½ in.	
	....	B	....	....	8 in.	
	....	....	....	328	6 9/16 in.	
Flange width	A	....	....	....	3¼ in.	
	....	B	....	....	3¼ in. top, 2 11/16 in. bottom	
	....	....	303	328	2½ in.	
Kick up, front	A	B	....	....	1¾ in.	
	....	....	303	328	¾ in.	
Kick up, rear	A	B	....	....	4 in.	
	....	....	303	328	5 in.	
Width, front	A	....	....	....	30 1/16 in.	
	....	....	303	....	29 in.	
	....	B	....	....	30 in.	
	....	....	....	328	29 1/16 in.	
Width, rear	A	....	....	....	35 1/16 in.	
	....	....	303	....	37½ in.	
	....	B	....	....	35 in.	
	....	....	....	328	37 9/16 in.	
Unit (Chassis) number, location of	A	B	303	328	On upper surface of left side bar opposite steering gear	

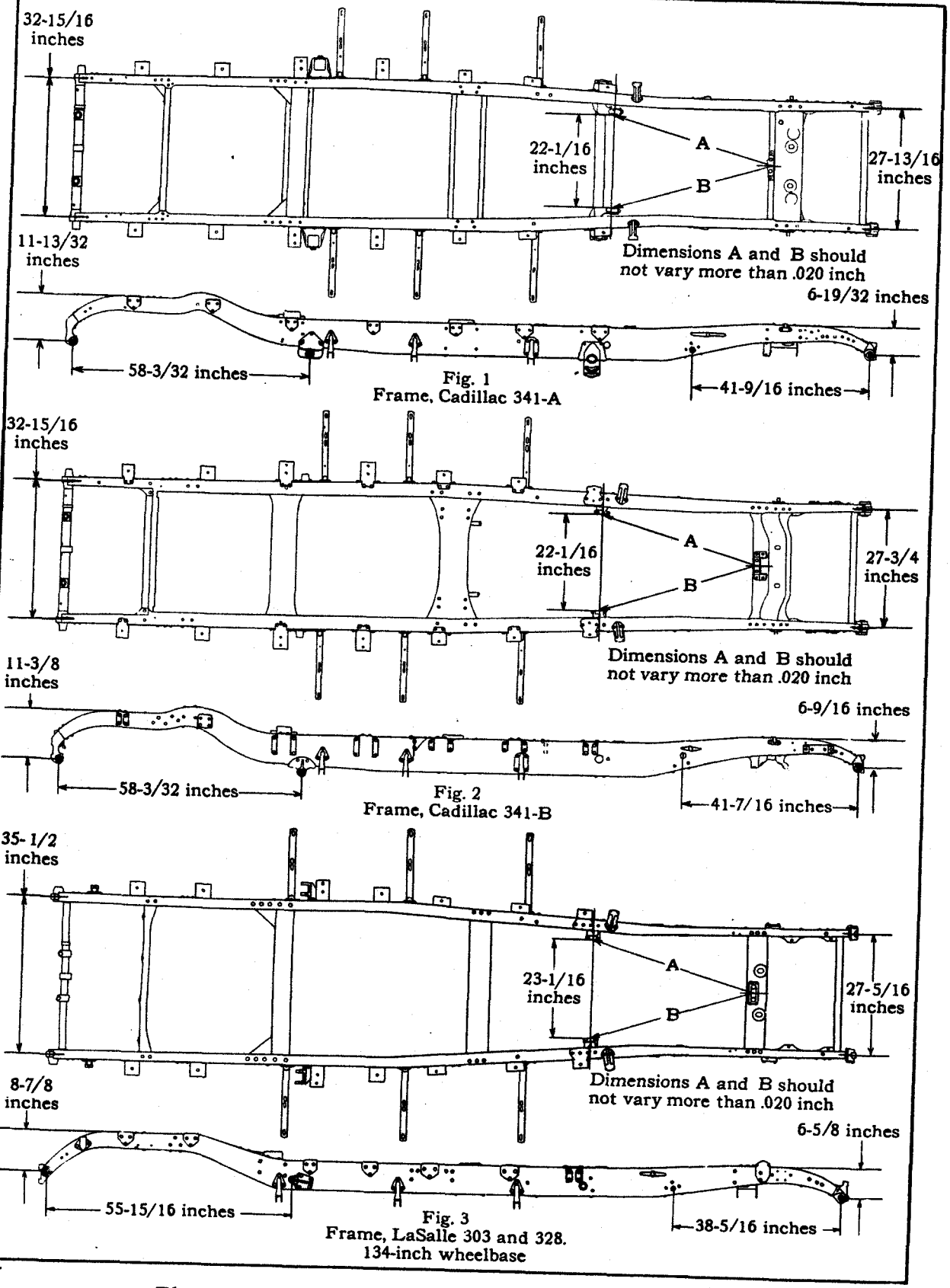

Fig. 1
Frame, Cadillac 341-A

Fig. 2
Frame, Cadillac 341-B

Fig. 3
Frame, LaSalle 303 and 328.
134-inch wheelbase

Plate 41. Diagrams of Cadillac and La Salle frames.

Gasoline System

Subject	Cadillac 341		LaSalle 303-328		Specifications	Remarks
Capacity of supply tank	A	B	....	....	21 gal.	Maximum gauge reading 20 gal.
	...	...	303	328	20 gal.	
Feed	A	B	303	328	Vacuum tank with auxiliary vacuum pump	
Gasoline gauge	A	B	303	328	Electric (Nagel)	
CARBURETOR						
Clearance between throttle disc and carburetor body	A	B	303	328	New limit, .003 in. Worn limit, not over .005 in.	
End play in throttle shaft	A	B	303	328	New limit, .0015 in. Worn limit, not over .005 in.	
Float setting	A	B	303	328	$\frac{11}{32}$ in.	
Size	A	B	303	328	2 in. (nominal)	
Size of nozzle	A	B	303	328	No. 16	
Throttle pump adjusting screw, fully open	A	B	303	328	7 turns	
Thermostat						
Air valve adjustment	A	B	303	328	$\frac{1}{64}$—$\frac{1}{32}$ in. Open at 65-85°F.	
Throttle pump control, closes	A	B	303	328	74°F.	
Throttle pump control, opens	A	B	303	328	78°F.	
Vent control, closes	A	B	303	328	125°F.	
Vent control, opens	A	B	303	328	130°F.	
Unit number, location of	A	B	303	328	Right side front on top flange	
VACUUM PUMP						
Clearance between connecting rod and crank journal on camshaft	A	B	303	328	New limits, .001—.003 in. Worn limits, not over .005 in.	
Clearance between piston and cylinder	A	B	303	328	New limits, .001—.0015 in. Worn limit, not over .003 in.	

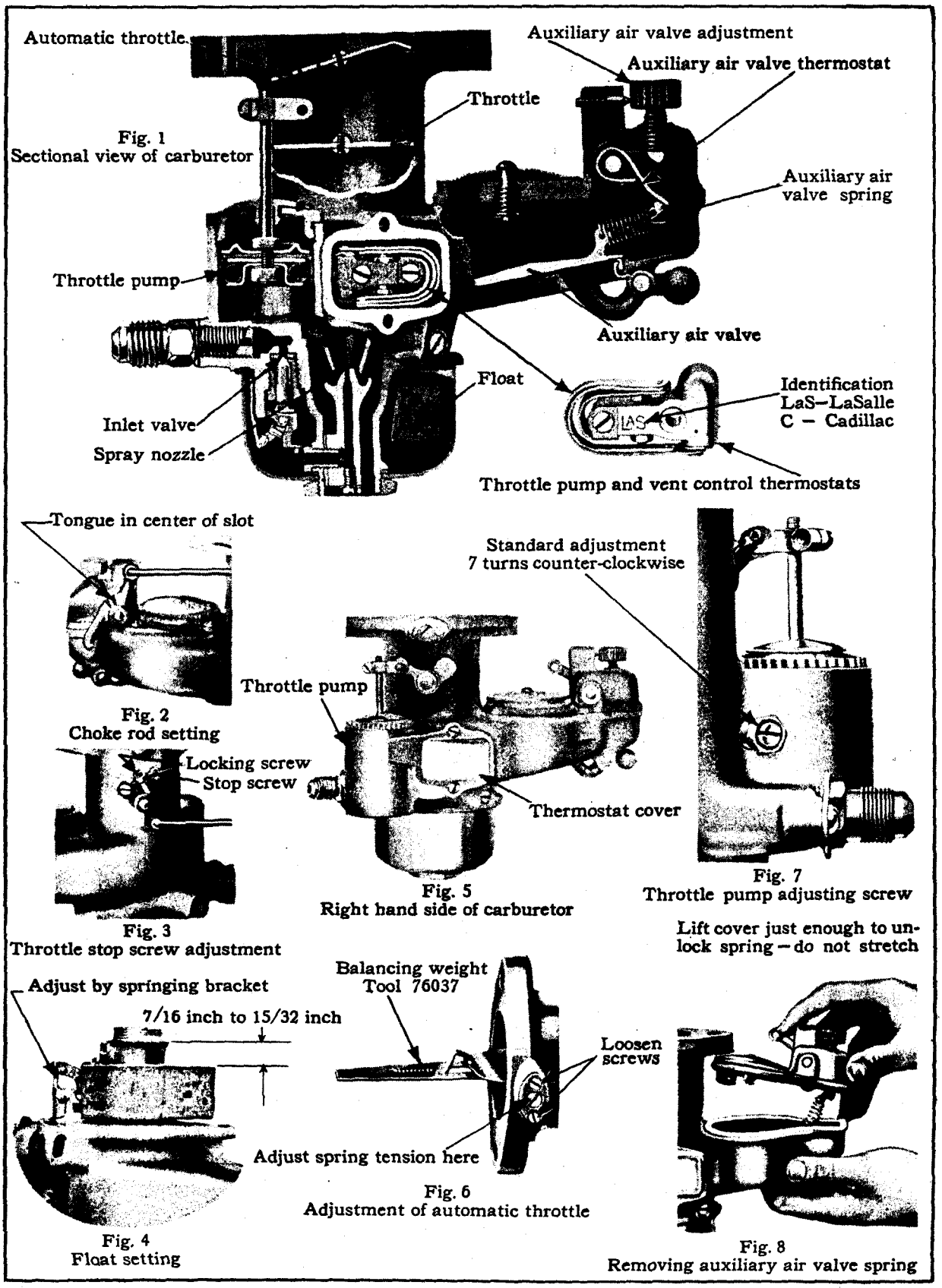

Fig. 1
Sectional view of carburetor

Fig. 2
Choke rod setting

Fig. 3
Throttle stop screw adjustment

Fig. 4
Float setting

Fig. 5
Right hand side of carburetor

Fig. 6
Adjustment of automatic throttle

Fig. 7
Throttle pump adjusting screw

Fig. 8
Removing auxiliary air valve spring

Plate 42. Carburetor and adjustments.

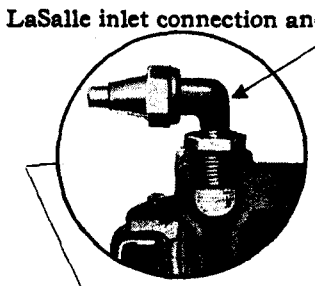

Fig. 1
Sectional view of vacuum tank

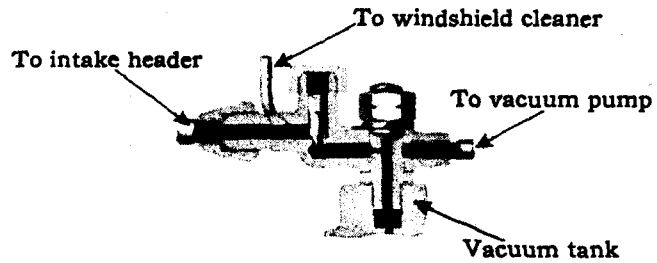

Fig. 2
First-type check valve—on vacuum tank.
LaSalle 303

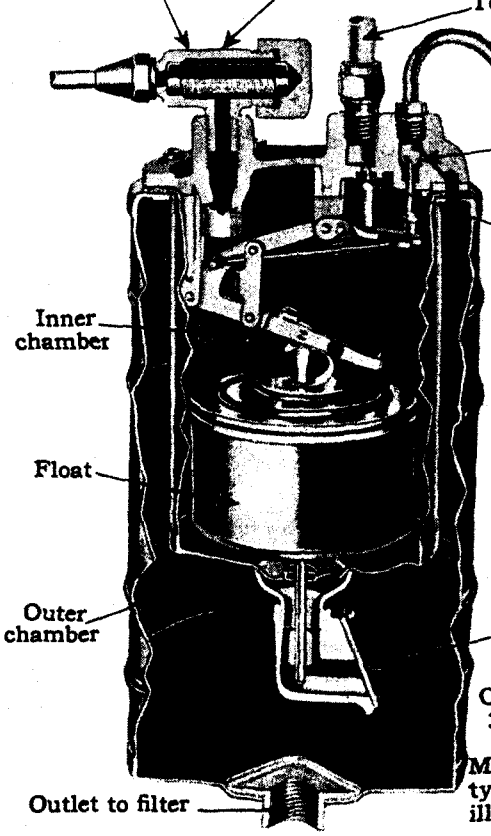

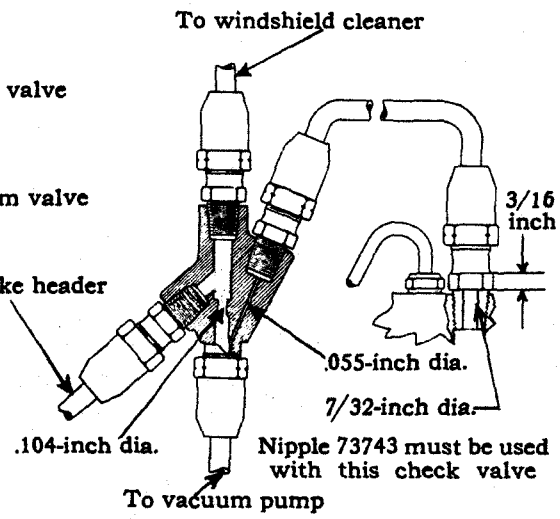

Fig. 3
Second-type check valve—on dash.
Cadillac 341-A and LaSalle 303

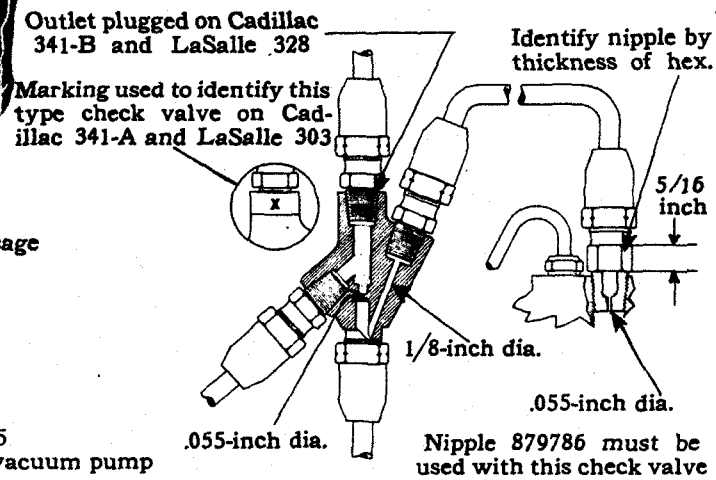

Fig. 4
Third-type check valve—on dash.
Cadillac 341-A and B, LaSalle 303 and 328

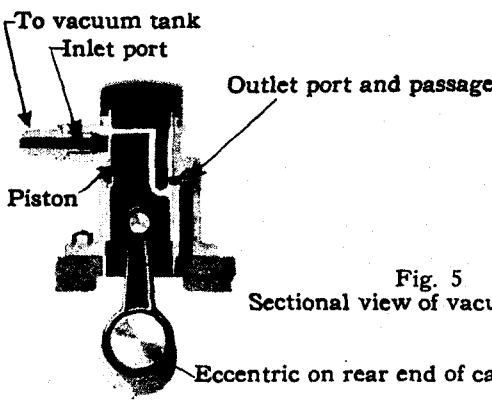

Fig. 5
Sectional view of vacuum pump

Plate 43. Vacuum tank, pump and check valve.

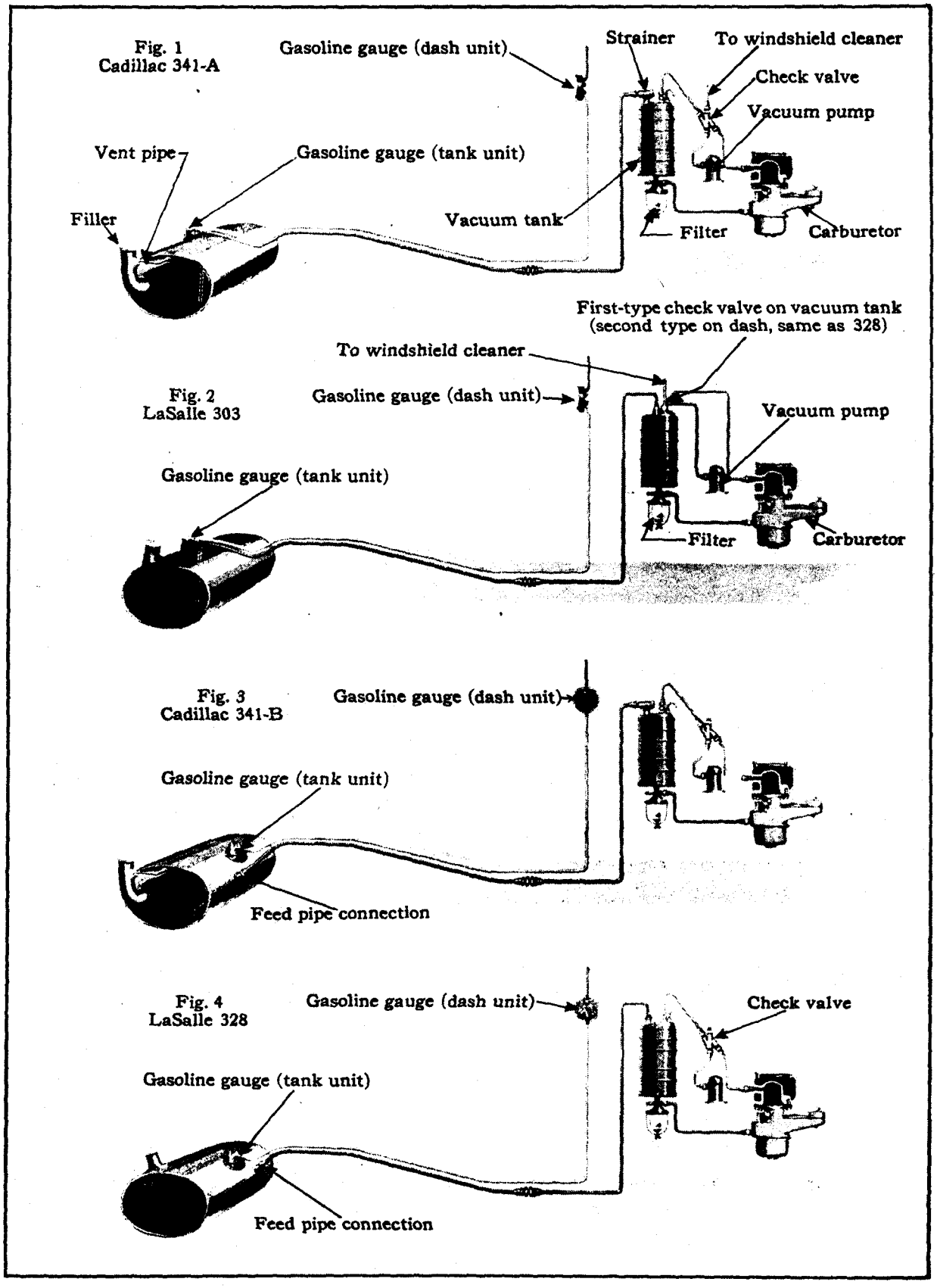

Plate 44. General arrangement of gasoline systems.

Lighting System

Subject	Cadillac 341		LaSalle 303-328		Specifications		Remarks
Cleaning headlamp reflectors	A	B	303	328			See note 1.
Headlamp lens, diameter	A	B	....	....	11 3/32 in.		
	....	....	303	328	10 11/32 in.		
Lamp bulbs, single or double contact	A	B	303	328	All single contact except two-filament headlamp bulbs which are double contact.		
Lamp bulb, sizes—					Candlepower	Mazda number	See note 2.
Headlamp bulb	A	B	303	328	21—21	1110	
Headlamp bulb	A	B	303	328	32—21	1116	Can be used as permitted by state regulations.
Parking lamp bulb	A	B	303	328	3	63	
Instrument lamp bulb	A	B	303	328	3	63	
Stop lamp bulb	A	B	....	....	21	1129	
	....	....	303	328	15	87	
Tail lamp bulb	A	B	....	....	3	63	
Running board step lamp bulb	A	B	....	....	3	63	
Closed car dome lamp bulb	A	B	303	328	3	63	
Rear quarter lamp bulb	A	B	303	328	3	63	
Voltage	A	B	303	328	6—8 volts		
Stop light, setting	A	B	303	328	Switch lever in "on" position at 3/4—1 in. movement of brake pedal		

1. Cleaning Headlamp Reflectors

To preserve the original reflector surface as much as possible, it should be polished with a good cleaner that is free from abrasive materials. A paste made of rouge or talcum powder and alcohol makes a good cleaner for this purpose. A clean cloth should be used and all rubbing should be done in straight lines from the bulb outward. Circular rubbing leaves fine lines which break up the beam of light, whereas rubbing straight from the bulb outward leaves lines parallel to the rays of light, which do not interfere with the reflection.

2. Headlamp Bulbs

Headlamp bulbs for Cadillac and La Salle cars have two filaments, one above the other, instead of the customary single filament. The filaments are located in different positions with respect to the focus of the parabolic reflector, and the beam of light from one filament is projected at a different angle from the other.

When the switch lever is in one position one set of filaments is lighted and the beams are projected straight ahead, illuminating the road at a distance. When the switch lever is in the other position, the other filaments are lighted and the beams are projected down at an angle, illuminating more brightly the road directly in front of the car.



Fig. 1
Lighting switch at bottom of steering gear. Cadillac 341-A and LaSalle 303

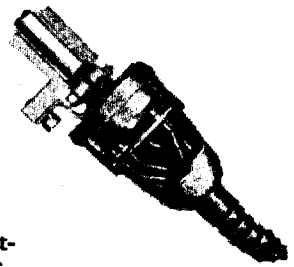

Fig. 2
Lighting switch at bottom of steering gear. Cadillac 341-B and LaSalle 328

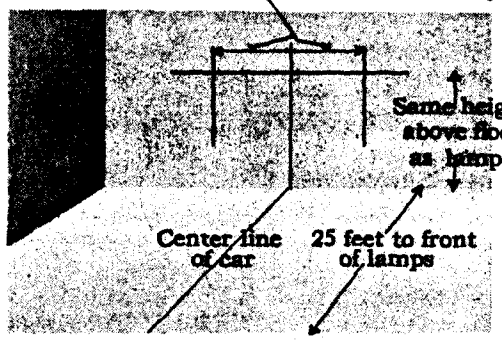

Fig. 5
Markings for adjustment of head lamps

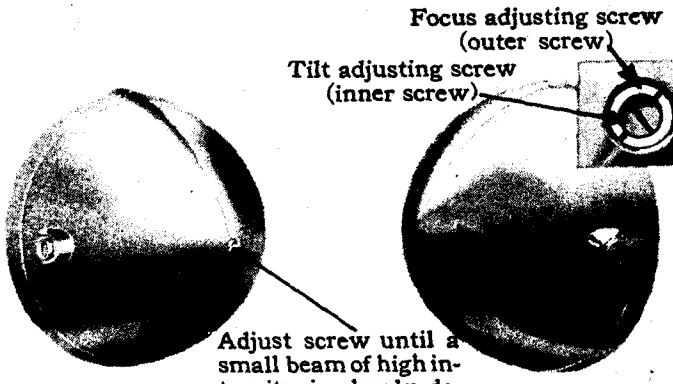

Fig. 3
Head lamp adjusting screw. Cadillac 341-A and B; LaSalle 303, second type, and 328

Fig. 4
Head lamp adjusting screws. LaSalle 303, first type

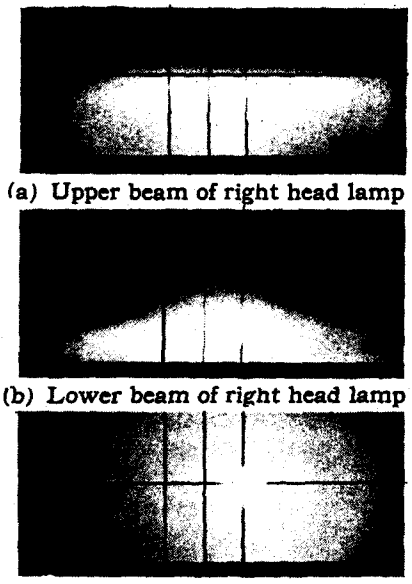

(a) Upper beam of right head lamp

(b) Lower beam of right head lamp

(c) Upper beam with lens removed

Fig. 6
Light beams with lamp properly focused and aimed. Cadillac 341-A and B; LaSalle 303, second type, and 328. After adjusting one head lamp, repeat adjustment on other lamp

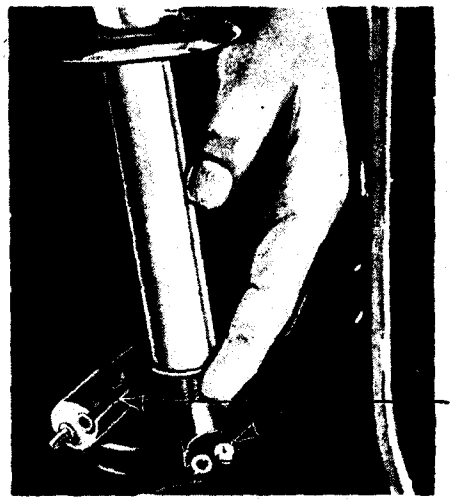

Fig. 8
Disconnecting wires on LaSalle 328 head lamp. Slotted coupling plugs used only on Cadillac 341-B and LaSalle 328. Coupling plugs are at top of conduits on Cadillac 341-A and B

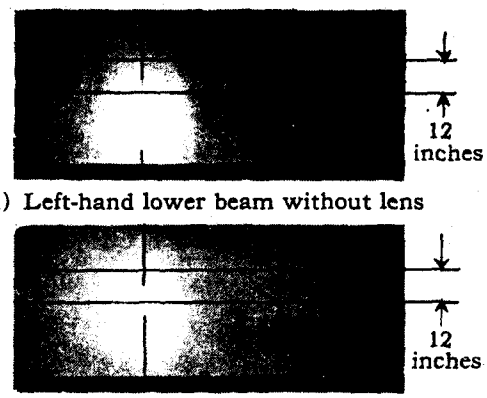

(a) Left-hand lower beam without lens

(b) Left-hand upper beam without lens

Fig. 7
Light beams with lamp properly focused and aimed. LaSalle 303 with first-type head lamp. After adjusting one lamp, repeat adjustment on other lamp

Plate 45. Lighting system details.

Lubrication

Subject	Cadillac 341		LaSalle 303-328		Specifications	Remarks
Oil pressure, engine	A	B	303	328	5-10 lbs. at idling speed	
Kerosene, for thinning—					Temperature / Per Cent Kerosene	
Engine oil	A	B	303	328	40° to 25° — 12½ 25° to 10° — 25 10° to -10° — 37½ -10° to -40° — 50	See Note 1.
Chassis lubricant	A	B	303	328	20° to -10° — 10 -10° to -30° — 25 Below -30° — 40	
CAPACITIES						
Engine	A	B	303	328	8 qts.	
Fan	A	B	303	328	⅛ pint, approximately	
Rear axle	A	B	....	....	2½ qts.	
			303	328	3 qts.	
Transmission	A	B	....	328	2½ qts.	
	....	....	303	....	1½ qts.	
LUBRICANTS						See lubrication diagrams pages 84, 85, 86 and 87, for points where lubricants are to be used. See Note 2.
Chassis lubricant	A	B	303	328	A-200 (viscosity 200 secs. at 210°)	
Engine oil	A	B	303	328	A-75 (viscosity 75 secs. at 210°)	
Fiber grease	A	B	303	328	G-7 (sodium soap grease, consistency 200-260)	
Spring lubricant	A	B	303	328	G-9 (petroleum jelly)	
Water pump grease	A	B	303	328	G-5 (calcium soap grease, consistency 82-145)	
Wheel bearing grease	A	B	303	328	G-2½ (calcium soap grease, consistency 250-315)	

1. Thinning Lubricants with Kerosene

Ordinarily, it is sufficient to thin the engine oil only at the beginning of cold weather and when adding fresh oil after draining the crankcase. However, if a car is driven at high speed for some distance the kerosene may be evaporated and driven off, leaving the oil as heavy as before it was thinned. In this case, it will be necessary to add more kerosene to the oil in the crankcase.

Chassis lubricant need be thinned only at the beginning of cold weather if a sufficient quantity of kerosene is added to take care of the lowest expected temperature.

2. Special Items for Lubrication Diagrams

The following items cannot be placed on the regular 1000-mile schedule, so they should be performed at the recommended intervals.

Every day—Check level of liquid in radiator.

Every week—Check tire pressure.

When cold weather starts—Thin engine oil with kerosene to permit easier cranking. Also thin lubricant in rear axle, transmission and steering gear.

At beginning of warm weather—Drain thinned lubricant and replace with fresh lubricant.

Once each season—Remove spring covers (if used) and repack with petroleum jelly.

Every 12000 miles—Check level of special oil in shock absorbers.

Every 12000 miles—Replace oil filter cartridge. Remove and clean engine oil pan and screen at same time.

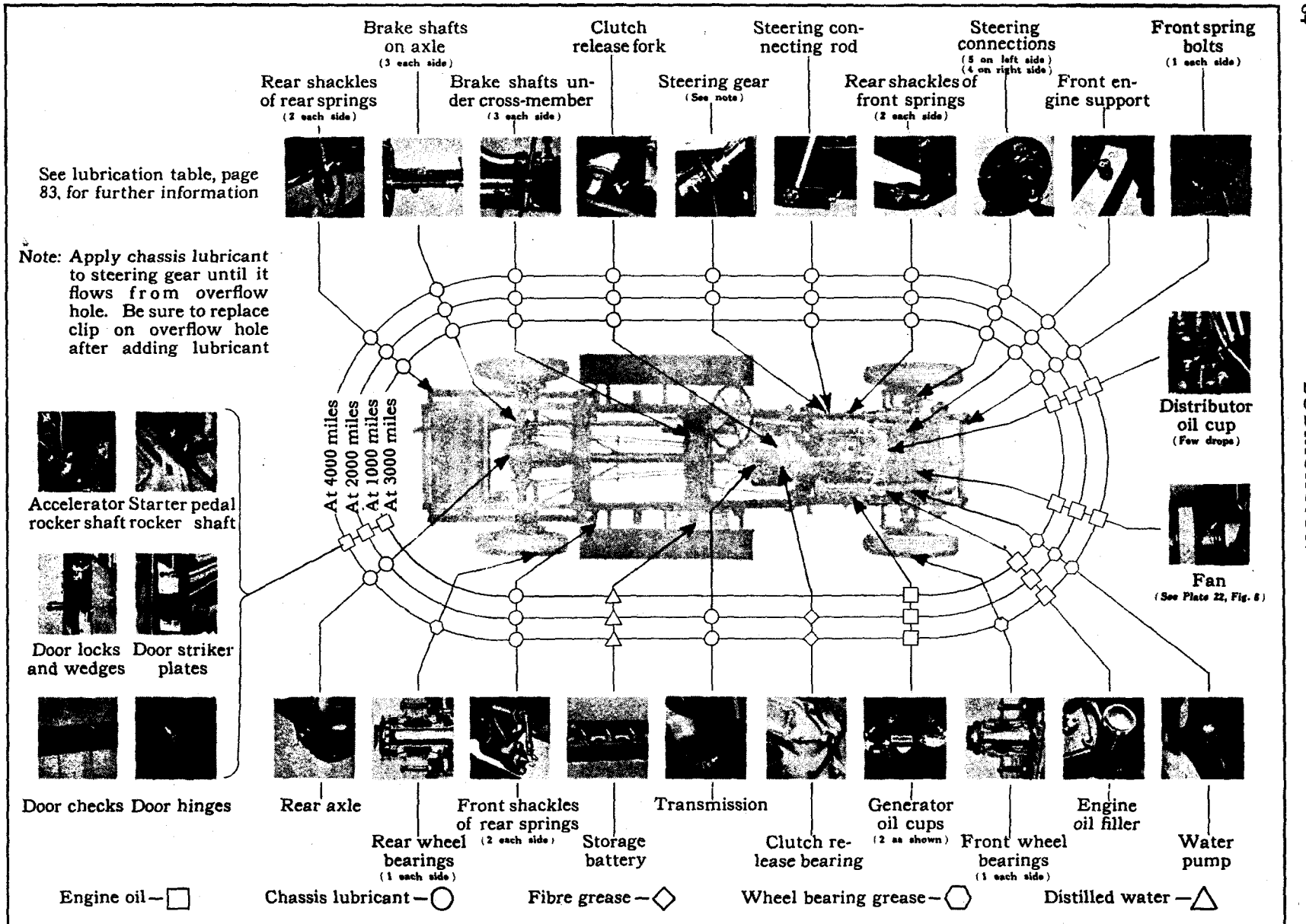

Plate 46. Lubrication diagram, Cadillac 341-B.

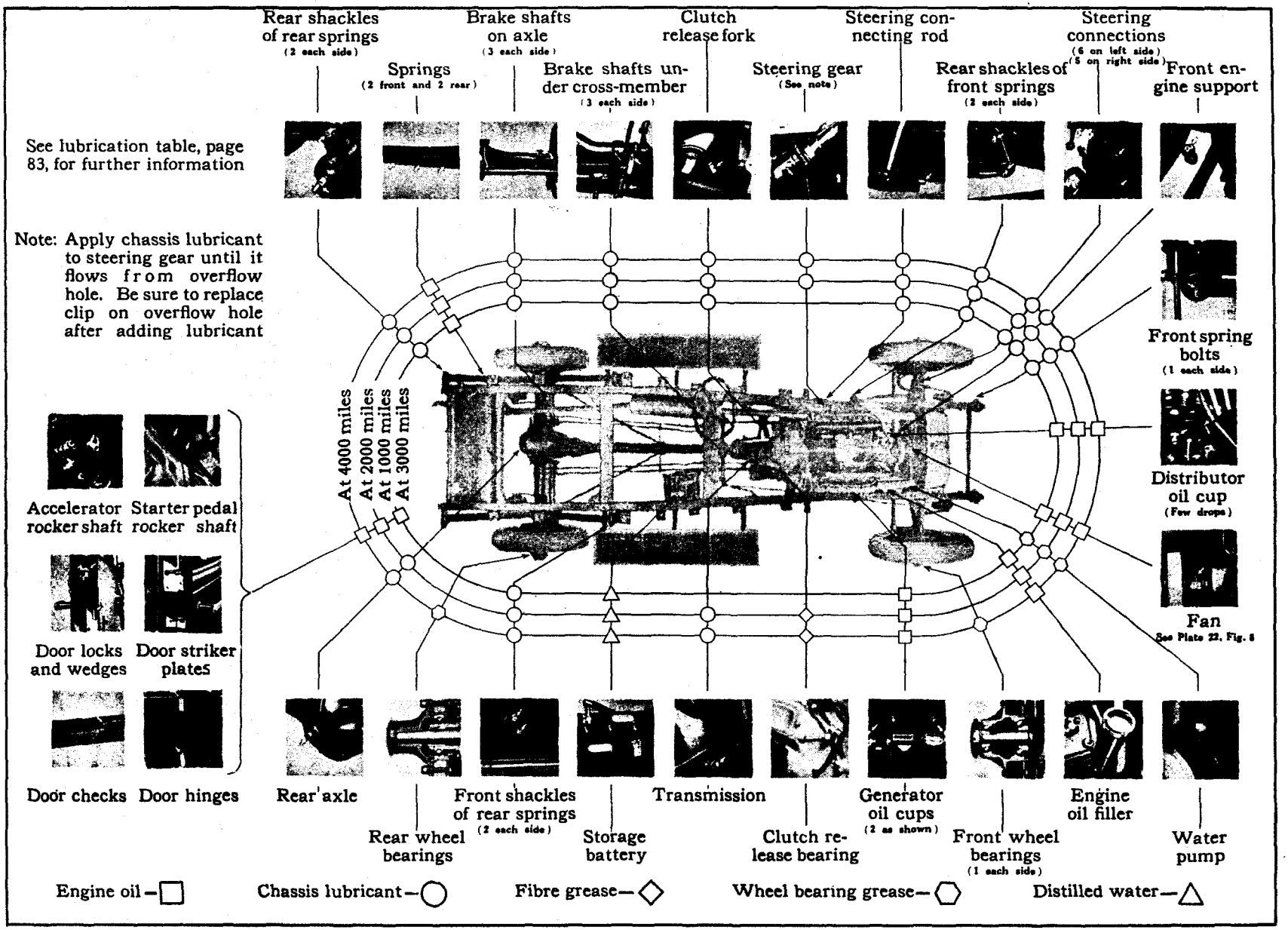

Plate 47. Lubrication diagram, La Salle 328.

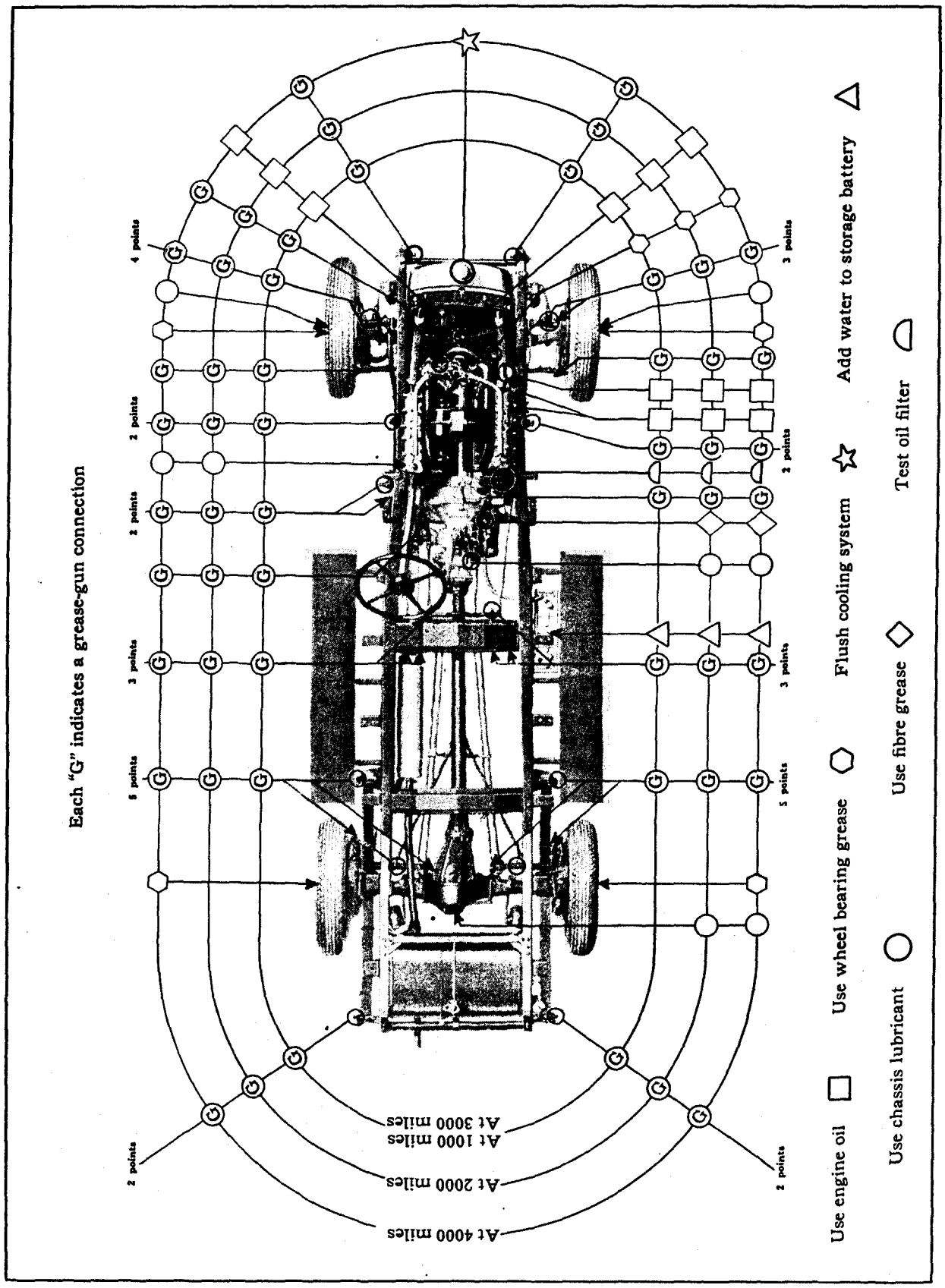

Plate 48. Chassis lubrication diagram, Cadillac 341-A.

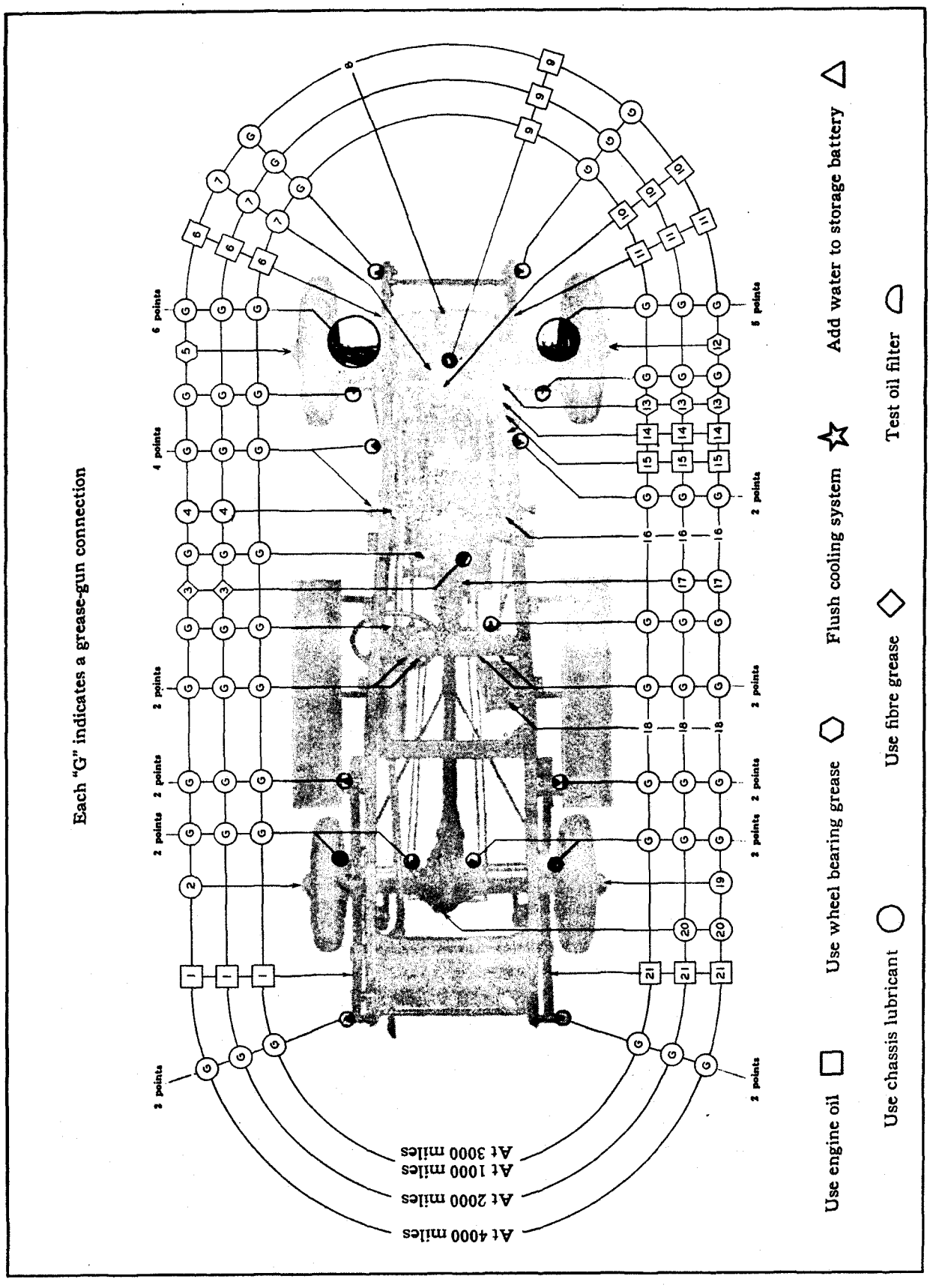

Plate 49. Chassis lubrication diagram, La Salle 303.

Springs

Subject	Cadillac 341		LaSalle 303-328		Specifications	Remarks
Bolts, diameter	A	B	303	328	.747-.748 in.	
Clearance between bolts and bushings	A	B	303	328	New limits, .001-.004 in. Worn limit, not over .006 in.	
Leaves Number of—						
Front	A	B	....	....	10	
	....	....	303[1]	....	8	Before chassis unit 2-15200
	....	....	303[2]	328	9	Beginning with chassis unit 2-15200
Rear, standard	A	B	....	....	9 Part No. 878710	2-pass. and 4-pass. cars.
					9 Part No. 878712	5-pass. cars.
					10 Part No. 878713	7-pass. cars.
	....	....	303[1]	....	9 Part No. 875871 Part No. 875872	2-pass. and 4-pass. cars (Except Town Sedan).
	....	....	303[1]	....	10 Part No. 875870	5-pass. cars and Town Sedan.
	....	....	303[1]	....	10 Part No. 875874	7-pass. cars.
	....	....	303[2]	328	9 Part No. 875876	2-pass. and 4-pass. cars (Except Town Sedan).
					10 Part No. 875873	5-pass. cars and Town Sedan.
					11 Part No. 875877	7-pass. cars.
Rear, special heavy	A	B	....	....	10 Part No. 878713	2-pass. and 4-pass. cars (Except Town Sedan).
					10 Part No. 878714	5-pass. cars and Town Sedan.
					10 Part No. 878716	7-pass. cars.
	....	....	303[1]	....	10 Part No. 875870	2-pass. and 4-pass. cars (Except Town Sedan).
	....	....	303[1]	....	10 Part No. 875874	5-pass. cars and Town Sedan.
	....	....	303[1]	....	10 Part No. 875875	7-pass. cars.
	....	....	303[2]	328	11 Part No. 875877	2-pass. and 4-pass. cars (Except Town Sedan).
					12 Part No. 875878	5-pass. cars and Town Sedan.
					12 Part No. 875879	7-pass. cars. See note 1.
Length, Center to Center—						
Front	A	B	....	....	42 in.	Spring in loaded position.
	....	....	303	328	39 in.	
Rear	A	B	....	....	60 in.	
	....	....	303	328	58 in.	
Width—						
Front	A	B	....	....	2¼ in.	
	....	....	303	328	2 in.	
Rear	A	B	....	....	2½ in.	
	....	....	303	328	2 in.	

1. Special Heavy Rear Springs

The standard rear springs with which Cadillac and La Salle cars are equipped are designed to give the best riding qualities under the road conditions which predominate where the greatest number of cars are used. Special heavy rear springs to prevent bottoming at high speed on rough roads are supplied by the Parts Division as listed in the table above.

The special heavy springs have 1½ inches more arch than the standard springs. To compensate for this, special rear shock absorber equipment is necessary on cars equipped with special heavy springs.

In the absence of these special heavy rear springs, the standard rear springs can be stiffened by inserting extra leaves. Two extra leaves are recommended and these should be duplicates of the No. 3 leaf. When using extra leaves it is necessary to use special length alignment clips and center bolts.

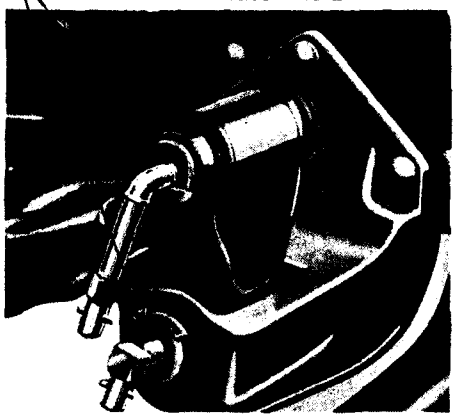

Fig. 1
Rear spring front shackle.
Cadillac 341-A



Fig. 2
Rear spring front shackle.
LaSalle 303 and 328

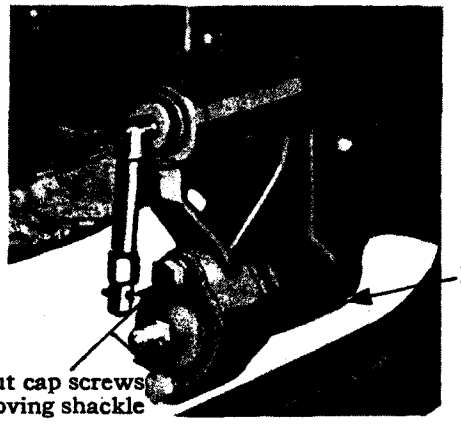

Fig. 3
Rear spring front shackle.
Cadillac 341-B

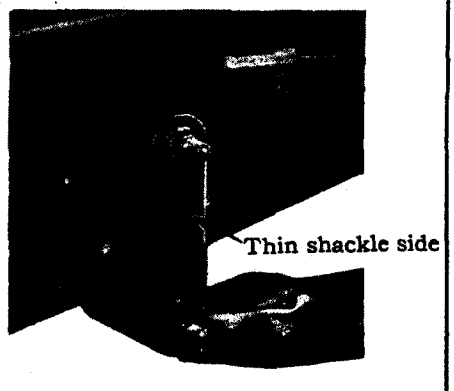

Fig. 4
Front spring rear shackle
Cadillac 341-B

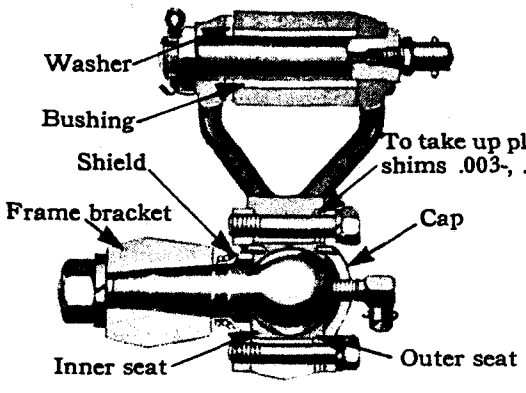

Fig. 5
Sectional view of rear spring shackle
Cadillac and LaSalle

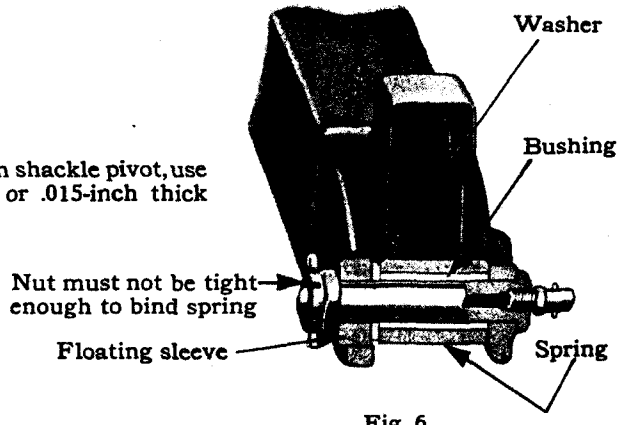

Fig. 6
Sectional view of front spring shackle
Cadillac and LaSalle

Plate 50. Cadillac and La Salle spring shackles.

Steering Gear

Subject	Cadillac 341		LaSalle 303-328		Specifications	Remarks
Angle of column—						
Closed cars	A	...	303	....	42° 10′	
	...	B	....	....	42° 25′	
	...	...	....	328	44° 28′	
Open cars	A[1]	...	....	....	40°	
	A[2]	...	....	....	40° 55′	
	...	...	303	....	42° 10′	
	...	B	....	....	41° 10′	
	...	...	....	328	42° 15′	
Clearance between steering tube (worm shaft) and bushings	A	B	303	328	.002—.004 in.	
Clearance between sector shaft and eccentric bushing	A	B	303	328	.001—.003 in.	
Diameter of steering wheel	A	B	....	....	19 in.	
	...	...	303	328	18 in.	
Ratio	A	...	....	....	16 to 1	Ratio of degrees movement of steering wheel to degrees movement of front wheel spindle.
	...	B	....	....	14.95 to 1	
	...	...	303	....	17.5 to 1	
	...	...	....	328	16.15 to 1	
Steering connecting rod-springs						
Free length	A	B	303	328	1 in.	
Compression	A	B	303	328	325—400 lbs. compressed to ⅞ in.	
Turning radius, left	A	B	....	....	25 ft.— 1 in.	Radius of circle swept by outside wall of tire. W. B.—Wheelbase.
	...	...	303	328	20 ft.— 8 in., 125 in. W. B.	
	...	...	....	....	22 ft.—10 in., 134 in. W. B.	
Turning radius, right	A	B	....	....	23 ft.— 0 in.	
	...	...	303	328	19 ft.— 7 in., 125 in. W. B.	
	...	...	....	....	21 ft.—½ in., 134 in W. B.	
Unit number, location of	A	B	303	328	Top face of steering gear housing, all models	

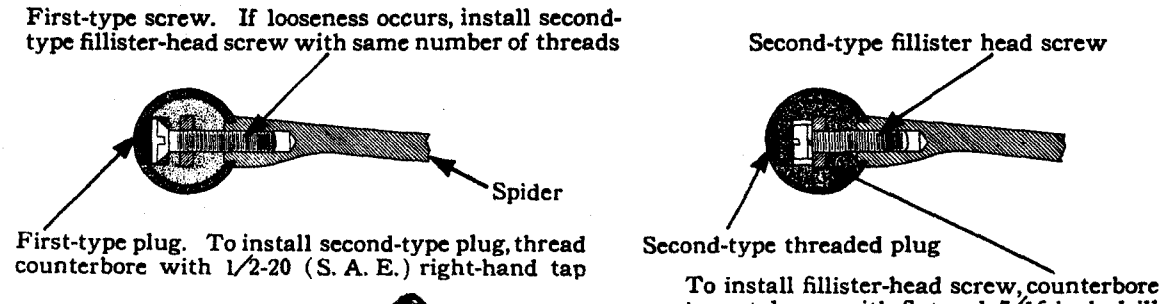

Fig. 2
Sectional view of steering wheel rim

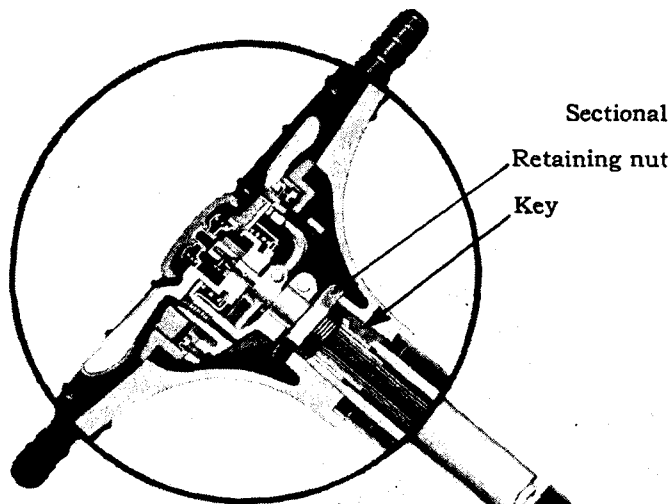

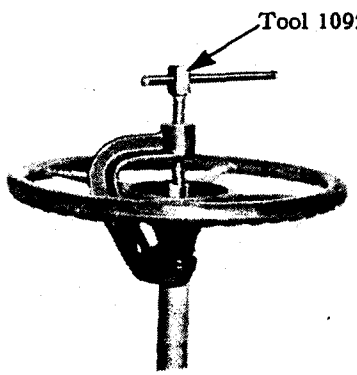

Fig. 3
Steering wheel puller

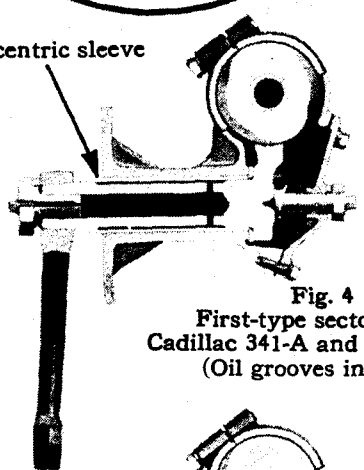

Fig. 4
First-type sector shaft.
Cadillac 341-A and LaSalle 303
(Oil grooves in shaft)

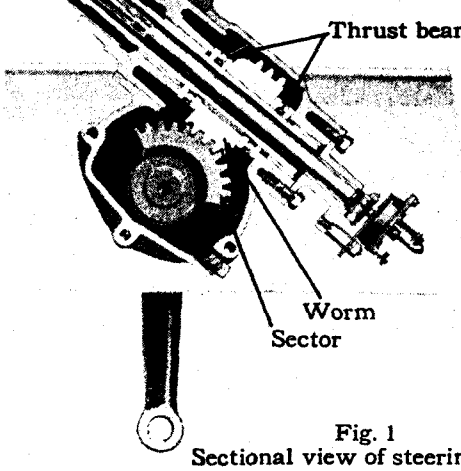

Fig. 1
Sectional view of steering gear

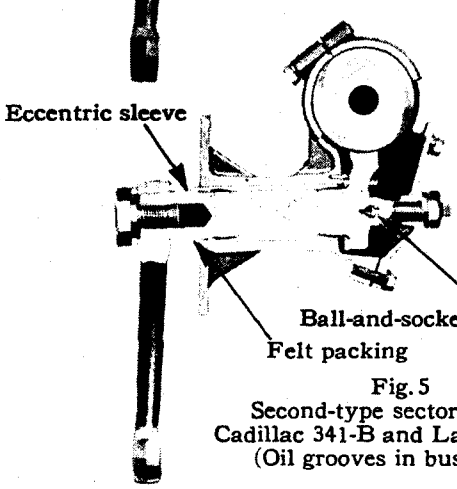

Fig. 5
Second-type sector shaft.
Cadillac 341-B and LaSalle 328
(Oil grooves in bushing)

Plate 51. Steering gear details.

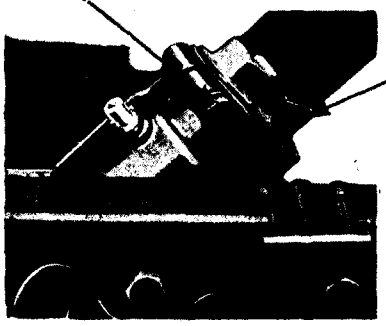

Fig. 1
Adjustment for end play in worm



Fig. 2
Eccentric sleeve adjustment

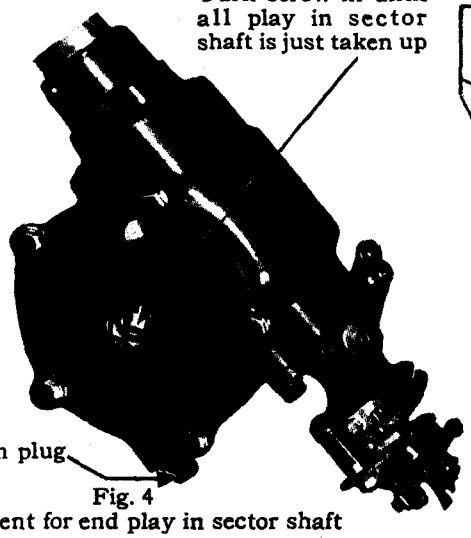

Fig. 4
Adjustment for end play in sector shaft

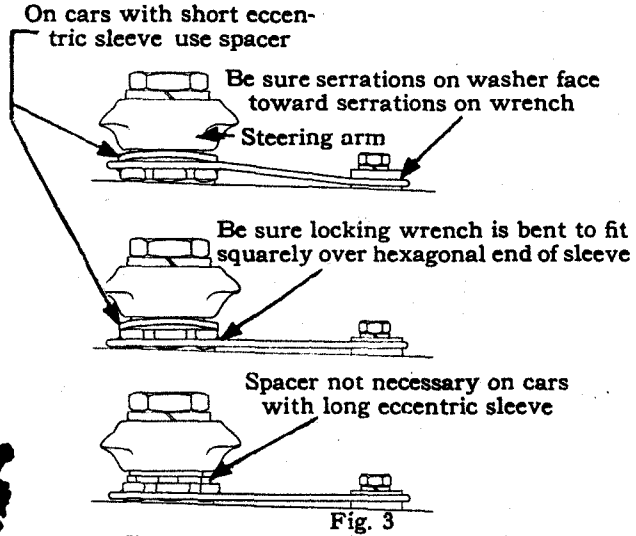

Fig. 3
Views showing installation of locking wrench on hexagonal end of eccentric sleeve

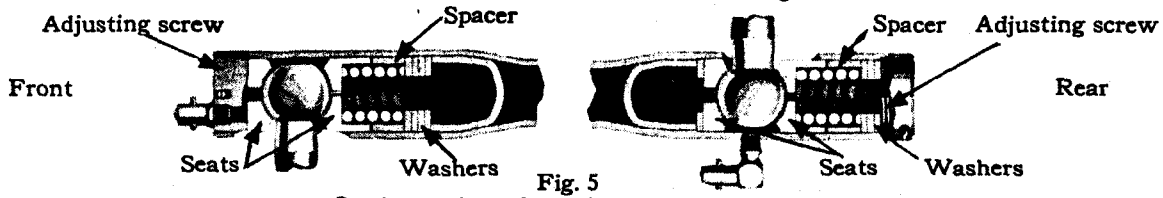

Fig. 5
Sectional view of steering connecting rod.
Cadillac 341-A and B

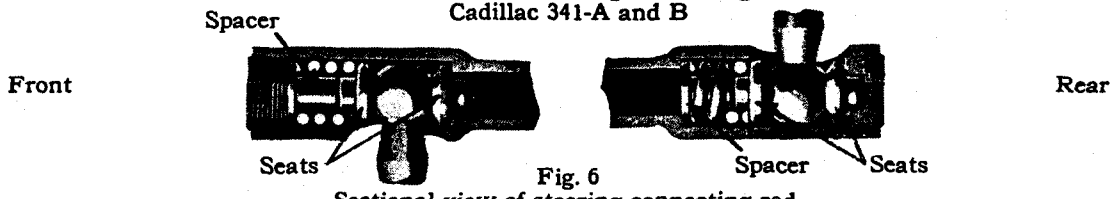

Fig. 6
Sectional view of steering connecting rod.
LaSalle 303, first type

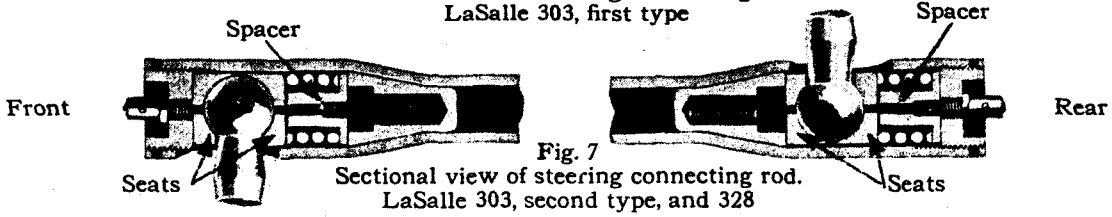

Fig. 7
Sectional view of steering connecting rod.
LaSalle 303, second type, and 328

Plate 52. Steering gear adjustments and steering connections.

Transmission and Universal Joint

Subject	Cadillac 341		LaSalle 303-328		Specifications	Remarks
TRANSMISSION						
Gear ratio, low gear	A	B	303	328	3.125 to 1	
Gear ratio, second gear	A	B	303	328	1.705 to 1	
Gear ratio, high gear	A	B	303	328	1 to 1 (Direct drive)	
Gear ratio, reverse gear	A	B	303	328	3.745 to 1	
Lubricant	A	B	303	328	Chassis lubricant A-200	
Lubricant, amount required	A	B	303	328		See capacities under Lubrication Table, Page 83.
Unit number, location	A	B	303	328	On center of left flange next to flywheel housing	
JACKSHAFT GEAR ASSY						
End play of gear unit	A	...	....	....	New limits, .001-.009 in. Worn limit, not over .015 in.	
	...	...	303	....	New limits, .012-.022 in. Worn limit, not over .025 in.	
	...	B	....	328	New limits, .001-.011 in. Worn limit, not over .025 in.	
Play in jackshaft bearings	A	B	303	328	Worn limit, not over .007 in.	
MAIN SHAFT ASSEMBLY						
Clearance between second speed gear and bushing	...	B	....	328	New limits, .002-.004 in. Worn limit, not over .006 in.	
Clearance between splines on main shaft and splineways of bushing in second speed gear	...	B	....	328	New limits, .001-.005 in. Worn limit, not over .008 in.	
Clearance between splines on main shaft and splineways in shifter gears	A	B	303	328	New limits, .001-.003 in. Worn limit, not over .005 in.	In 341-B and 328 cars, these limits apply only to low-and-reverse shifter gear.
Clearance between splines on main shaft and splineways in sliding gear coupling	...	B	....	328	New limits, .001-.003 in. Worn limit, not over .005 in.	
Clutch connection shaft, out of true	A	B	303	328	Not over .0025 in.	
End play between clutch connection shaft and main shaft	...	B	....	328	New limits, .001-.012 in. Worn limit, not over .020 in.	
End play in clutch connection shaft rear bearing	A	...	303	....	Not over .015 in.	
End play in main shaft rear bearing	A	...	303	....	Not over .015 in.	
Main shaft, out of true	A	B	303	328	Not over .0025 in.	
Shake between clutch connection shaft and main shaft	A	B	303	328	Not over .006 in.	
REVERSE PINION GEAR ASSEMBLY						
Clearance between reverse pinion shaft and bushing	A	B	303	328	New limits, .001-.003 in. Worn limit, not over .004 in.	

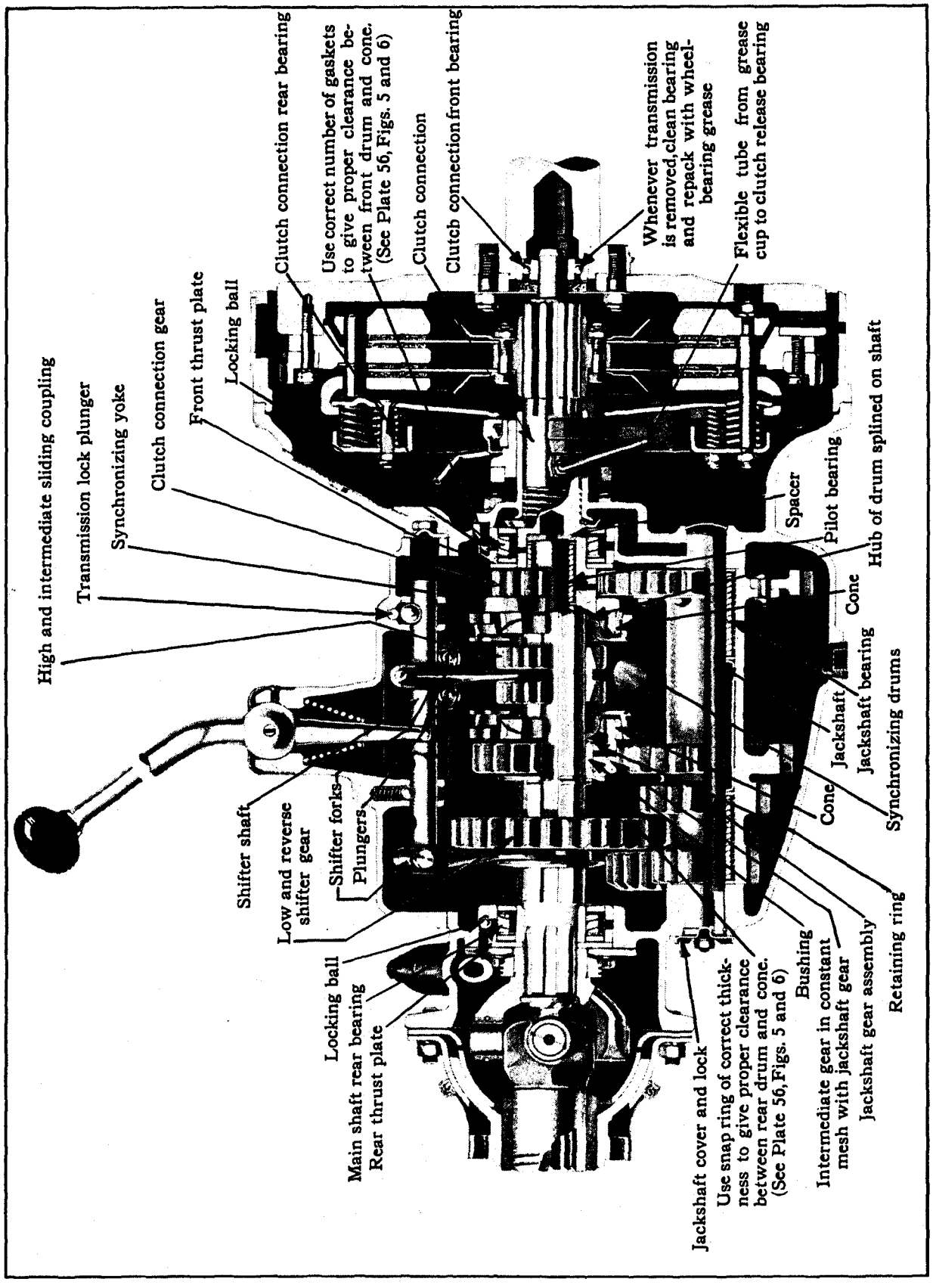

Plate 53. Sectional view of transmission, Cadillac 341-B and La Salle 328.

Subject	Cadillac 341		LaSalle 303-328		Specifications		Remarks
End play in reverse pinion	A		303		New limits, .010-.022 in. Worn limit, not over .025 in.		
		B		328	Worn limit, not over .025 in.		
Reaming size for reverse pinion bushing	A	B	303	328	.937-.938 in.		
SHIFTING MECHANISM							
Clearance between shifter fork and shifter gear	A		303		New limits, .010-.017 in. Worn limit, not over .025 in.		
		B		328	New limits, .005-.012 in. Worn limit, not over .020 in.		
Shifter shaft lock spring, free length	A				1 11/32 in., approximately		
			303		1 13/32 in., approximately		
		B		328	1 3/16 in., approximately		
Shifter shaft lock spring, compression	A				24-26 lbs. at 1 in.		
			303		24-26 lbs. at 1 1/4 in.		
		B		328	20-23 lbs. at 3/4 in.		
YOKE ASSEMBLY							
Clearance between guide block and drum		B		328	New limits, .002-.006 in. Worn limit, not over .010 in.		
Clearance between plunger and yoke bore		B		328	New limits, .001-.003 in. Worn limit, not over .005 in.		
Plunger main spring, free length		B		328	1 1/4 in., approximately		
Plunger main spring, compression		B		328	24-26 lbs. at 1 3/32 in.		
Plunger valve spring, free length		B		328	5/8 in., approximately		
Plunger valve spring, compression		B		328	2 3/4-3 1/4 lbs. at 7/16 in.		
Yoke return springs, free length		B		328	1 1/8 in., approximately		
Yoke return springs, compression		B		328	14-16 lbs. at 11/64 in.		
Yoke throw from neutral to applied position		B		328	New limits, 3/32-9/64 in. Worn limit, not over 1/4 in.		*Measured at top of transmission case, Plate 56, Fig. 5.*
SPEEDOMETER GEARS					Driving Gear No. of Teeth	Driven Gear No. of Teeth	See notes 1 and 2. Part Number
32 x 6.75 (7.00/20) TIRES							
4.75:1 gear ratio	A				7		878207
						21	878208
		B			7		848176
						20	848122
4.39:1 gear ratio	A				7		878207
						19	878209
		B			7		848176
						19	848178
5.08:1 gear ratio	A				7		878207
						22	876259
		B			7		848176
						22	848124
32 x 6.00 (6.00/20) TIRES							
4.54:1 gear ratio			303		7		874375

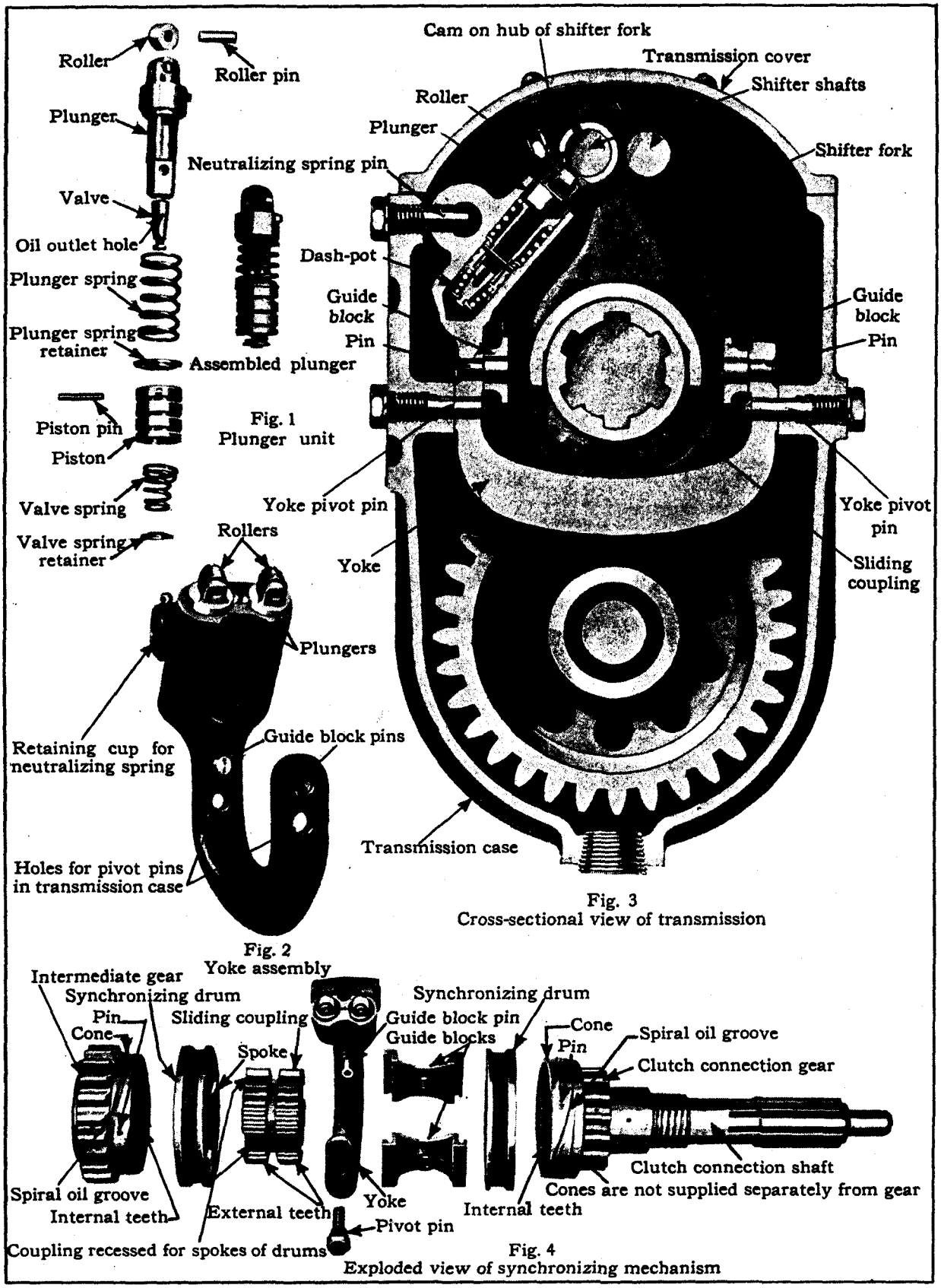

Plate 54. Transmission synchronizing mechanism.

Subject	Cadillac 341		LaSalle 303-328		Specifications		Remarks
					Driving Gear No. of Teeth	Driven Gear No. of Teeth	Part Number
			303			21	874374 (First type before transmission unit 2-5781) See note 1.
							876258 (Second type) See note 1.
4.91:1 gear ratio			303		7		874375
						22	876226 (First type before transmission unit 2-5781) See note 1.
							876259 (Second type) See note 1.
4.07:1 gear ratio			303		7		876267
						18	876374
32 x 6.20 (6.50/20) TIRES							
4.54:1 gear ratio			303		7		874375
						20	877088
4.91:1 gear ratio			303		7		874375
						22	876259
4.07:1 gear ratio			303		7		876267
						18	876374
31 x 6.20 (6.50/19) TIRES							
4.54:1 gear ratio				328	7		848176
						21	848123
4.91:1 gear ratio				328	7		848176
						23	848125
4.07:1 gear ratio				328	7		848176
						19	848178
UNIVERSAL JOINT							
Ball and socket joint, adjustment	A	B	303	328	Remove gaskets until friction can be felt in joint, then add one gasket		
Ball member bushing, assembly	A	B	303	328	Oil grooves must cross on right side and open toward top and bottom of ball		
Clearance between crosses and bushings	A	B	303	328	New limits, .0025-.004 in. Worn limit, not over .006 in.		
Clearance between yoke and ball member bushing	A	B	303	328	New limits, .005-.007 in. Worn limit, not over .010 in.		

1. Speedometer Drive and Driven Gears

Two types of driven gears are listed for LaSalle 303 cars. The first type gears are for transmissions before unit 2-5781, and the second type gears are for transmissions after this unit number.

Beginning with transmission unit 2-5781, the speedometer cable is smaller in diameter, so that a gear with a smaller hole is required.

There is no 18-tooth gear of the first type listed in the table. If a car with the first type speedometer cable is to be equipped with a 4.07 to 1 axle, it will be necessary to order a second type gear, part number 876374, and drill out the hole to ¼-in. diameter. The gear can then be used with the first type cable.

In changing to the 4.07 to 1 high gear ratio, it is necessary to change the driving gear, which is on the end of the transmission main shaft, as well as the driven gear.

All driving gears have seventeeth but differ in lead and pitch. Driven gears with 18 and 22 teeth give slightly fast readings with 32 x 6.00 tires and slightly slow readings with 32 x 6.20 tires.

2. Installation of Cable Flange

On 341-A and 303 cars the distance between the centers of the driving gear and driven gear is the same for all combinations. On 341-B and 328 cars, two different center distances are used, one for pinions with 16 to 19 teeth and one for pinions with 20 to 23 teeth. In order to make this possible, the end of the speedometer cable is eccentric. In one position, the cable gives the correct center distance for pinions with 16 to 19 teeth. When revolved 180° the cable gives the correct center distance for pinions with 20 to 23 teeth. The flange of the cable end has the figures "16-19" on one side and "20-23" on the other side. The cable should always be turned so that the figures corresponding to the number of teeth on the pinion are on top.

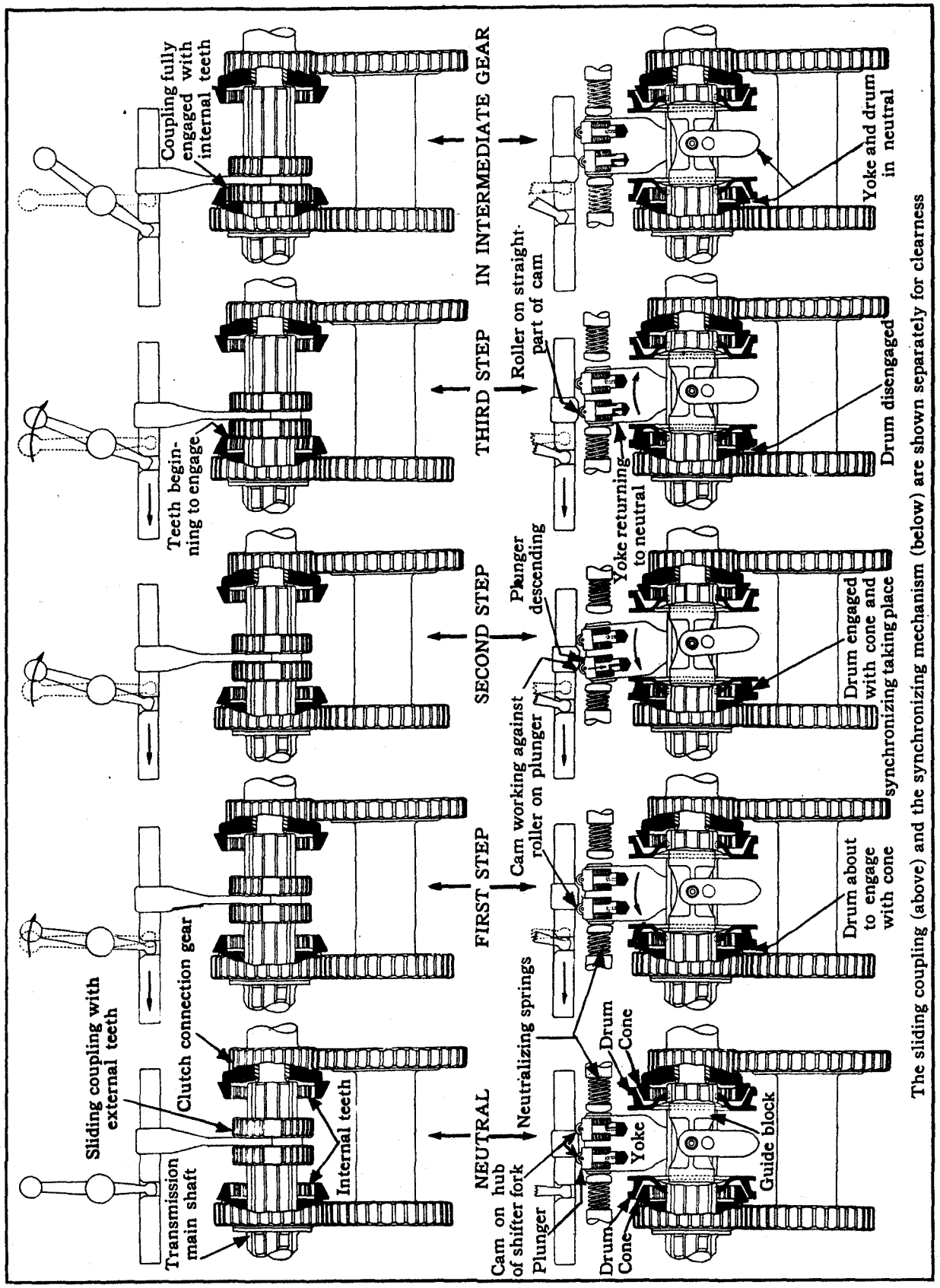

Plate 55. Diagrams showing operation of synchronizing mechanism. (Neutral to intermediate).

Figs. 1 to 4
Sectional views of synchronizing yoke showing action of dash-pot plungers

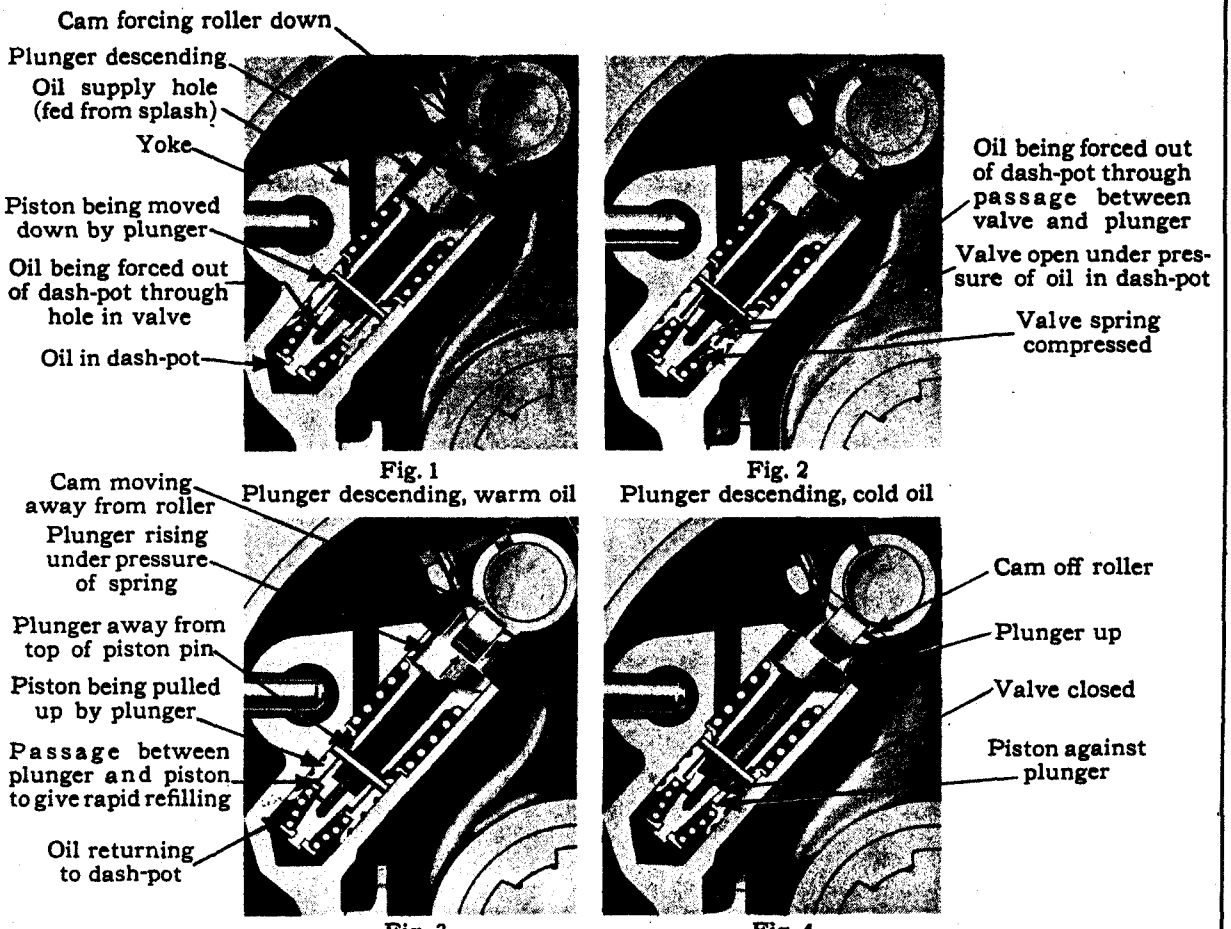

Fig. 1 Plunger descending, warm oil

Fig. 2 Plunger descending, cold oil

Fig. 3 Plunger returning to normal position. Dash-pot refilling

Fig. 4 Plunger in normal position

Prying tool. Use round punch or screwdriver. Use just enough pressure to engage drum with cone



Fig. 5
Measuring travel of yoke to determine clearance between front drum and cone. Repeat in opposite direction for rear drum

Clearance determined by number of gaskets under clutch connection rear-bearing cap. Normal clearance .002 inch measured as shown in Fig. 5

Clearance determined by thickness of snap ring in bushing. Normal clearance .002 inch measured as shown in Fig. 5

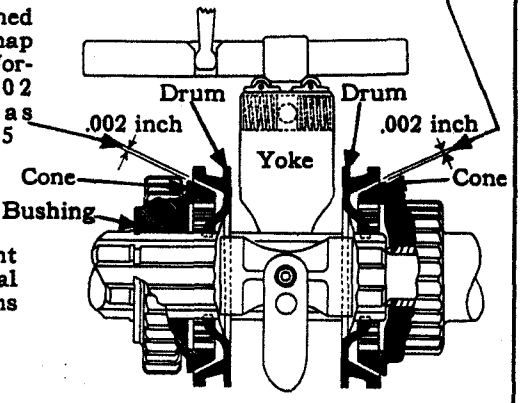

Fig. 6
Clearance between drum and cone. Adjustment necessary only when installing new parts

Plate 56. Dash pot operation and drum clearances.

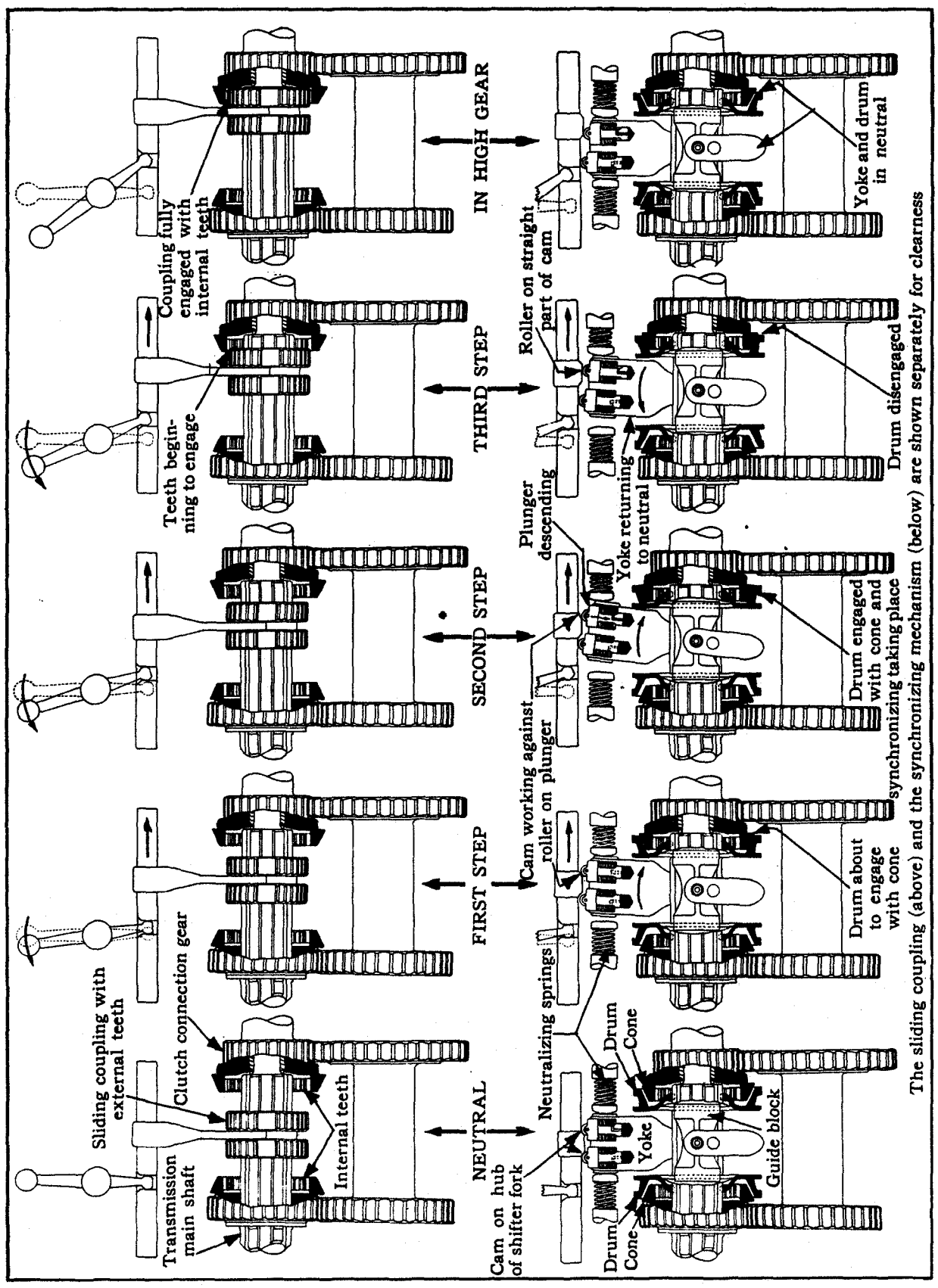

Plate 57. Diagrams showing operation of synchronizing mechanism. (Neutral to direct drive).

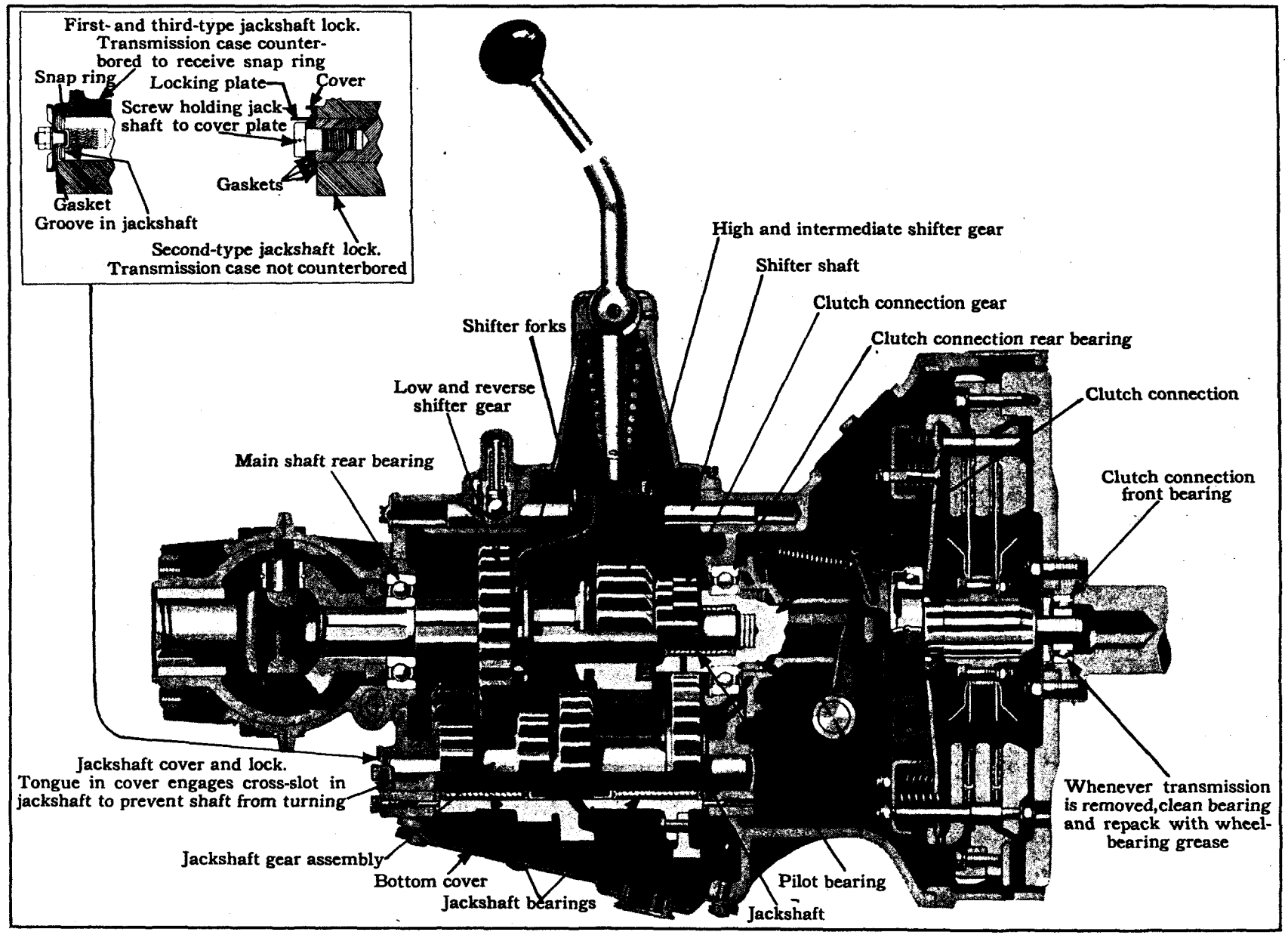

Plate 58. Sectional view of Cadillac 341-A transmission.

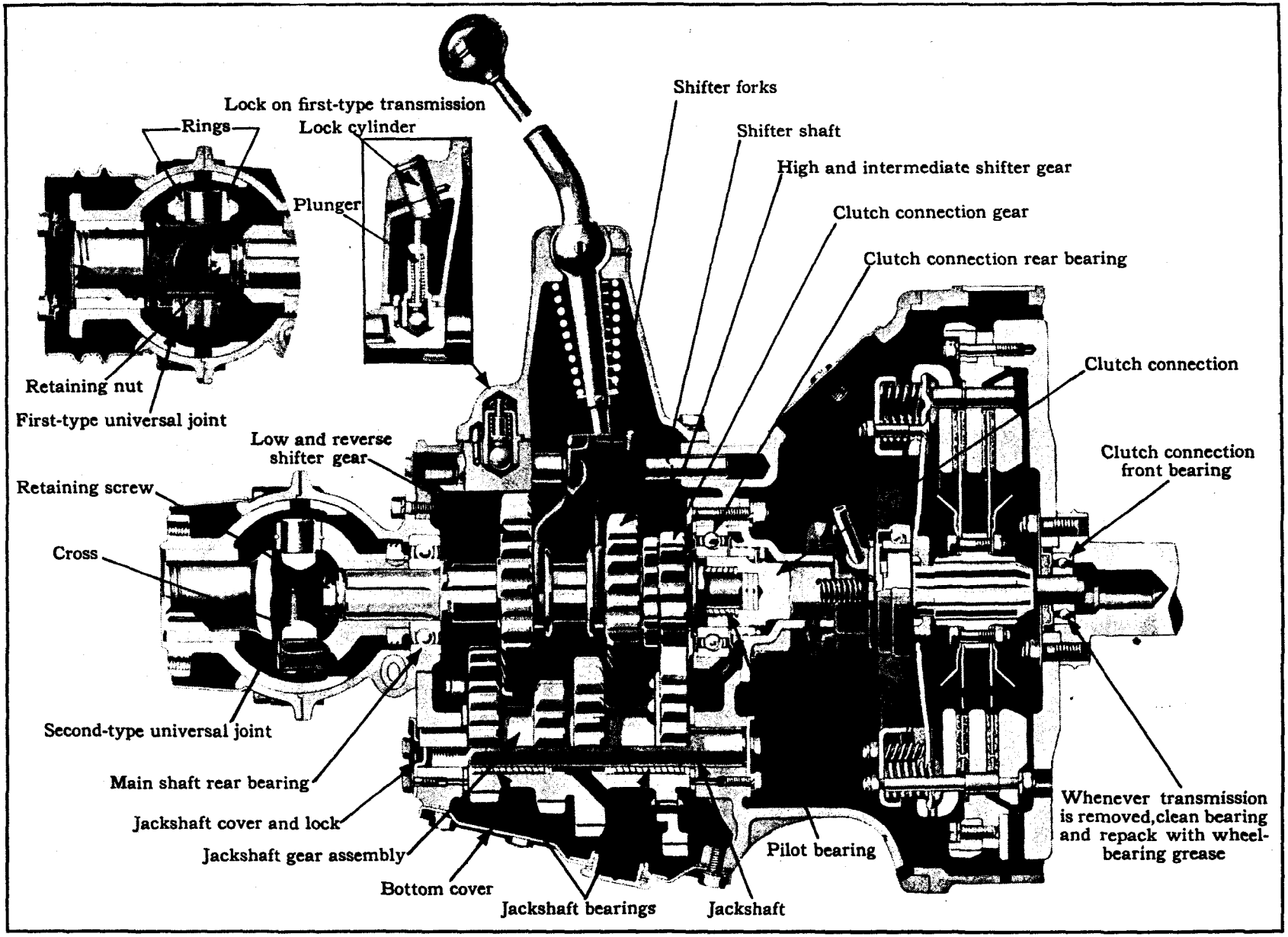

Plate 59. Sectional view of La Salle 303 transmission.

Figs. 1 and 2
Dowel pins are necessary for guiding the transmission during its removal and installation to prevent springing the clutch discs.
Cadillac 341-A and LaSalle 303 with plate clutch

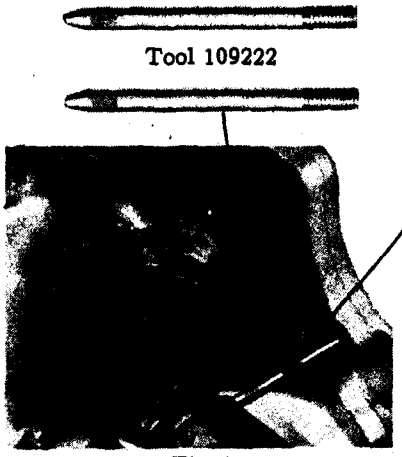

Fig. 1
First-type detachable dowel pin

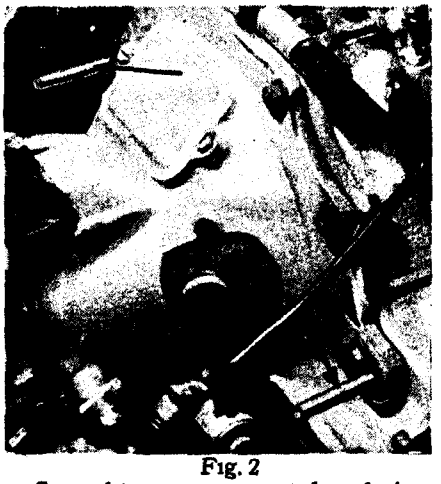

Fig. 2
Second-type permanent dowel pins

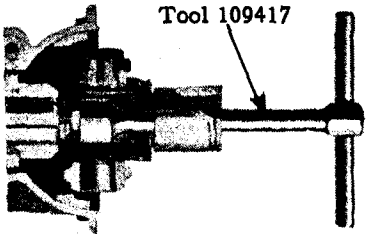

Fig. 3
Wrench for removing universal joint retaining nut.
Use wrench 109217 for second-type joint with retaining screw

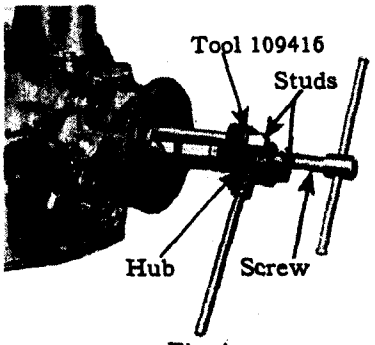

Fig. 4
Universal joint puller.
Use adapters in place of studs for Cadillac 341-A and B; LaSalle 303, second type, and 328

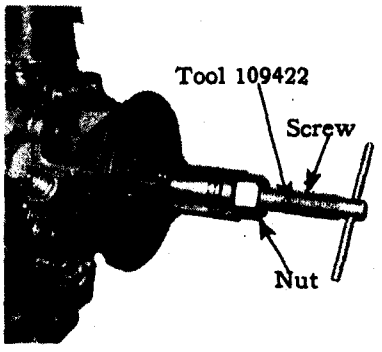

Fig. 5
Universal joint pusher.
Use adapter on end of screw for Cadillac 341-A and B; La Salle 303, second type, and 328

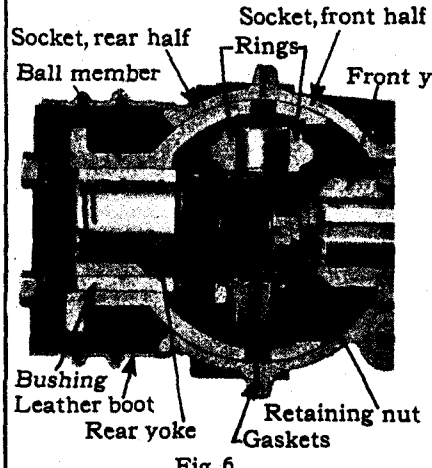

Fig. 6
Sectional view of universal joint.
LaSalle 303, first type

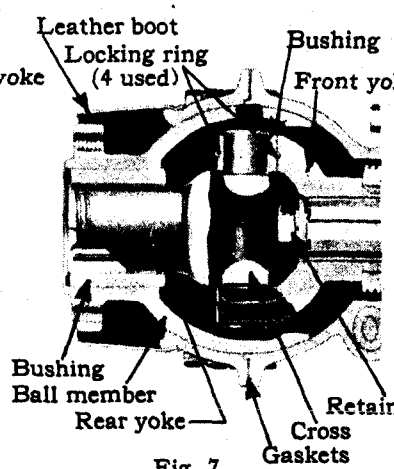

Fig. 7
Sectional view of universal joint.
Cadillac 341-A and LaSalle 303, second type

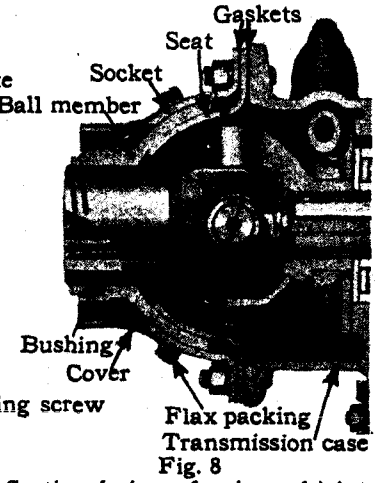

Fig. 8
Sectional view of universal joint.
Cadillac 341-B and LaSalle 328

Plate 60. Removal of transmission and universal joint.

Wheels, Rims and Tires

Subject	Cadillac 341		LaSalle 303-328		Specifications		Remarks
WHEELS AND RIMS							
Adjustment of bearings	A	B	303	328			See note 1.
Brake drums, out of round	A	...	303	....	Not over .015 in. (Indicator reading).		
	...	B	....	328	Not over .007 in. (Indicator reading).		
Wheel felloe, out of true (Radial and lateral run-out)	A	B	303	328	Not over $\frac{1}{16}$ in. (Indicator reading).		
Wheel size	A	B	303	....	20 in.		
	...	...	....	328	19 in.		
Rim size	A	B	....	....	20 x 6 in.		
	...	...	303	....	20 x 4½ in.		
	...	...	....	328	19 x 5 in.		
TIRES							
Balancing mark, location of	A	B	303	328	In line with valve stem		
Chain size	A	...	....	....			With some makes of chains it is necessary to use 33x6.20 chains on 32x6.75 tires to prevent interference with brakes.
Recommended pressure—							
Front	A	B	303	328	40 lbs., normal 50 lbs., high speed		
Rear	A	B	303	328	40 lbs.		
					Old marking	New marking	
Size	A	B	....	....	32 x 6.75	7.00/20	
	...	...	303	....	32 x 6.00	6.00/20	125 in. wheelbase
					32 x 6.20	6.50/20	134 in. wheelbase.
	...	...	....	328	31 x 6.20	6.50/19	

1. Bearing Adjustments

The roller bearings in the front and rear wheels of 341-A and 341-B cars and the ball bearings in the front wheels of 303 and 328 La Salle cars should not be adjusted too tight. They should be adjusted so that a very slight amount of play or looseness may be discerned. If, after a bearing has been adjusted to a point that is apparently correct the locking device cannot be placed in position without changing the adjustment loosen instead of tightening the adjusting nut until it can be secured with the locking device.

CAUTION: When adjusting the front wheel bearings care should be taken not to mistake play in the knuckle bolt for play in the wheel bearings. To eliminate dragging of the brakes as a factor in this adjustment it is also a good plan to turn the wheels to the right when adjusting the left-hand wheel bearings, and turn the wheels to the left when adjusting the right-hand wheel bearing. This automatically insures full release of the brakes.

The rear wheel bearings on 303 and 328 cars are not adjustable.

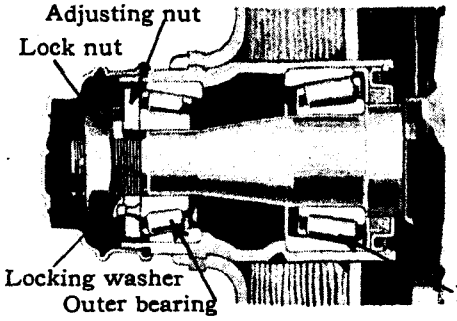

Fig. 1
Sectional view of front wheel hub.
Cadillac 341-B (wood wheel)

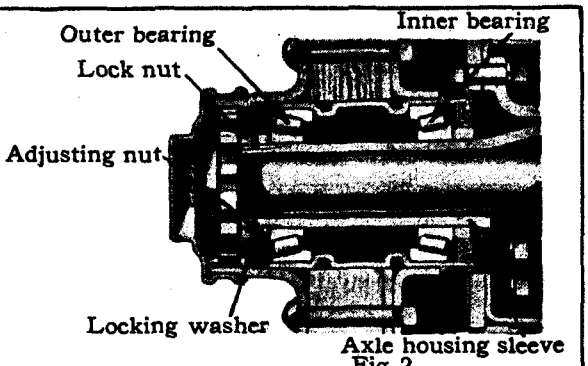

Fig. 2
Sectional view of rear wheel hub.
Cadillac 341-B (wood wheel)

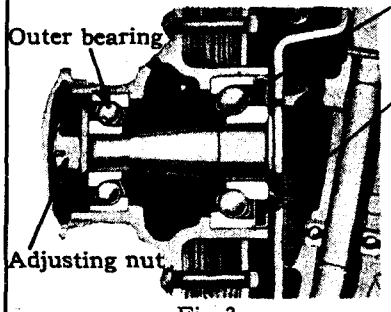

Fig. 3
Sectional view of front wheel hub.
LaSalle 303 (wood wheel)

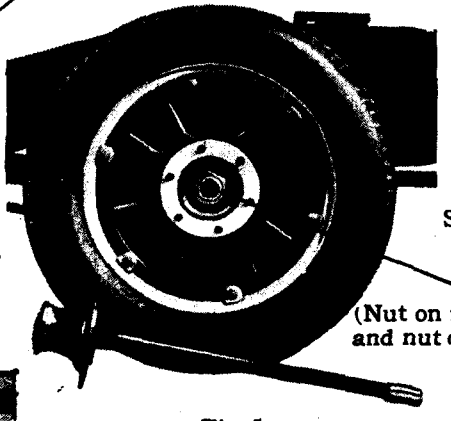

Fig. 5
Rear wheel with axle shaft
removed LaSalle 303

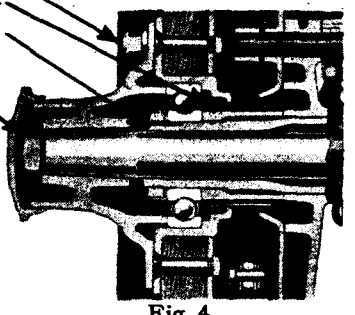

Fig. 4
Sectional view of rear wheel hub.
LaSalle 303 (wood wheel)

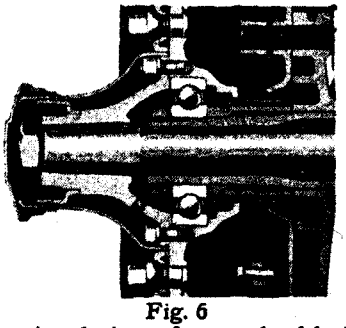

Fig. 6
Sectional view of rear wheel hub.
LaSalle 303 (disc wheel)

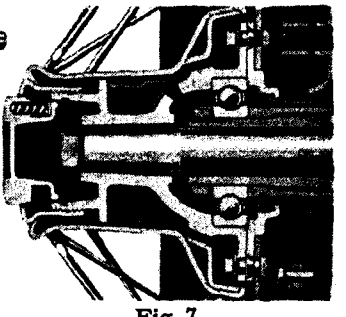

Fig. 7
Sectional view of rear wheel hub.
LaSalle 303 (wire wheel)

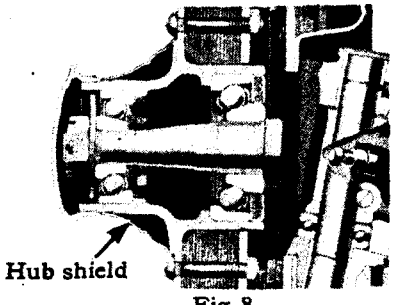

Fig. 8
Sectional view of front wheel hub.
LaSalle 328 (wood wheel)

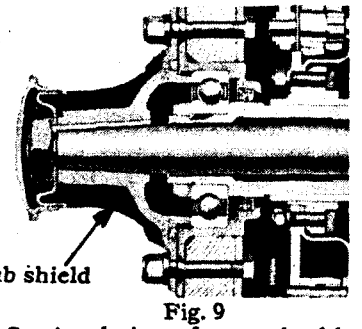

Fig. 9
Sectional view of rear wheel hub.
LaSalle 328 (wood wheel)

Plate 61. Cadillac and La Salle wheel bearings.

(NO) 6, 18, 34, 40, 46, 62, 88, 106 PAGES MISSING

CADILLAC-LaSALLE SHOP MANUAL

Adjustments, Repairs and Lubrication



Cadillac 341-A, 341-B
LaSalle 303, 328

FILE COPY
DO NOT REMOVE

Book Number_____

Please refer to the above number when writing us in regard to this Manual

Service Department
CADILLAC MOTOR CAR COMPANY
DETROIT

Foreword

THIS Shop Manual is a book of reference on the adjustment and repair of Cadillac and La Salle motor cars. It is intended for the use of service men who are already familiar with automobile construction and repairing in general. It is not a text book for those who have had no previous shop experience and does not aim to present instructions in elementary form.

The style in which the information is presented is a distinct departure from the usual book of this sort. Straight reading matter has been eliminated as far as possible and the facts and figures needed by service men are presented briefly in two ways—by illustrations and by tabulated specifications.

At the beginning of each group is a specification table giving clearances, dimensions and other facts important to service men. Explanations, where necessary, follow the specifications in the form of notes. The rest of the information is in picture form on the pages following the specification table.

Our service department invites correspondence with service managers and shop foremen on all matters discussed in the Shop Manual.

CADILLAC MOTOR CAR COMPANY
Detroit, Michigan

Copyright 1928 by
Cadillac Motor Car Company
Detroit

August, 1928

Printed in U.S.A.

FILE COPY
DO NOT REMOVE

Contents

NOTE: The information contained in this book is grouped under the headings shown below. The table of specifications at the beginning of each group acts as an index for the information pertaining to that group.

Front Axle — Page

Specifications 7, 8
Plate 1. Sectional view of Cadillac front wheel hub and steering knuckle 9
Plate 2. Sectional view of La Salle front wheel hub and steering knuckle 10
Plate 3. Front wheel alignment, camber and caster 11
Plate 4. Alignment of axle I-beam and steering knuckle arms 12

Rear Axle and Torsion Tube

Specifications 13, 14
Plate 5. Sectional view of Cadillac rear axle 15
Plate 6. Sectional view of La Salle rear axle 16
Plate 7. Torsion tube, drive shaft and axle housing 17

Body

For service information pertaining to bodies the reader is referred to the manual published by the Fisher Body Corporation, Detroit, Michigan.

Brakes

Specifications 19, 21
Plate 8. Adjustment of Cadillac 341-B and La Salle 328 brake connections—first type 20
Plate 9. Adjustment of Cadillac 341-B and La Salle 328 brake connections—second type 22
Plate 10. Adjustment of Cadillac 341-B front and rear foot brakes 23
Plate 11. Adjustment of La Salle 328 front and rear foot brakes 24
Plate 12. Cadillac 341-B and La Salle 328 hand brakes—first type 25
Plate 13. Adjustment of Cadillac 341-A brake connections 26, 27
Plate 14. Adjustment of La Salle 303 brake connections 28, 29
Plate 15. Adjustment of Cadillac 341-A rear foot brakes 30
Plate 16. Adjustment of La Salle 303 rear foot brakes 31
Plate 17. Adjustment of La Salle 303 front brakes—first type 32
Plate 18. Adjustment of front brakes, Cadillac 341-A and La Salle 303 second type 33

Clutch

Specifications 35, 36
Plate 19. Sectional view of clutch 37
Plate 20. Adjustment of clutch pedal rod 38
Plate 21. Removal and disassembly of plate-type clutch 39

Cooling System

Specifications 41, 43, 44
Plate 22. Fan details 42
Plate 23. Cooling system details 45

Electrical

Specifications 47, 49, 51, 52
Plate 24. Generator details 48
Plate 25. Horn Adjustments 50
Plate 26. Sectional and top views of distributor 53
Plate 27. Ignition timing 54
Plate 28. Electrolock and dual ignition and transmission lock 55
Plate 29. Starting motor details 56
Plate 30. Circuit diagram, Cadillac 341-B 57
Plate 31. Circuit diagram, La Salle 328 58
Plate 32. Circuit diagram, Cadillac 341-A 59
Plate 33. Circuit diagram, La Salle 303—first type 60
Plate 34. Circuit diagram, La Salle 303—second type 61

Engine
Specifications 63, 65, 67, 69, 71, 72
Plate 35. Sectional view of engine 64
Plate 36. Water pump and generator drive 66
Plate 37. Connecting rod details 68
Plate 38. Indicating bearing clearance 70
Plate 39. Oil pump, pressure regulator and valves 73
Plate 40. Cylinder head, piston pin and engine rear support 74

Frame
Specifications 75
Plate 41. Diagrams of Cadillac and La Salle frames 76

Gasoline System
Specifications 77
Plate 42. Carburetor adjustments 78
Plate 43. Vacuum tank, pump and check valve 79
Plate 44. General arrangement of gasoline systems 80

Lighting System
Specifications 81
Plate 45. Lighting system details 82

Lubrication
Specifications 83
Plate 46. Lubrication diagram, Cadillac 341-B 84
Plate 47. Lubrication diagram, La Salle 328 85
Plate 48. Chassis lubrication diagram, Cadillac 341-A 86
Plate 49. Chassis lubrication diagram, La Salle 303 87

Springs and Shock Absorbers
Specifications 89, 90A, 90B
Plate 50. Cadillac and La Salle spring shackles 90

Steering Gear
Specifications 91
Plate 51. Steering gear details 92
Plate 52. Steering gear adjustments and steering connections 93
Plate 52A. Steering gear adjustments and steering connections 94

Transmission
Specifications 95, 97, 98A, 98B
Plate 53. Sectional view of transmission, Cadillac 341-B and LaSalle 328 96
Plate 54. Cross-sectional view of transmission, Cadillac 341-B and La Salle 328 98
Plate 54A. Transmission synchronizing mechanism 99
Plate 55. Diagrams showing operation of synchronizing mechanism. (Neutral to intermediate) 100
Plate 56. Dash pot operation and drum clearances 101
Plate 57. Diagrams showing operation of synchronizing mechanism. (Neutral to direct drive) 102
Plate 58. Sectional view of Cadillac 341-A transmission 103
Plate 59. Sectional view of La Salle 303 transmission 104
Plate 60. Removal of transmission and universal joint 105

Wheels, Rims and Tires
Specifications 107
Plate 61. Cadillac and La Salle wheel bearings 108

FILE COPY
DO NOT REMOVE

Introduction

Arrangements of Tables

THE subjects covered in the specification tables are listed in alphabetical order in the first column, and the corresponding facts or figures in the column under "Specifications." Under "Remarks" will be found important comments, cautions and references to illustrations and notes.

In cases where a change in construction has been made and the same information does not apply to all cars of the same model, small figures "1" and "2" are used following the model number or letter to designate first and second type construction. Thus, La Salle cars with the first type or cam-operated brakes, are designated as "303[1]" and cars used with second type or toggle brakes as "303[2]". The unit number at which the change was made is given under "Remarks."

One class of information in the specifications consists of limits for the clearance between parts subject to wear. The limits given are of two kinds. "New limits" are those to be observed in replacing worn parts with new parts. "Worn limits" are those beyond which it is inadvisable to continue to use the worn parts if quietness of operation and maximum performance are expected. Some service, although not the most satisfactory, can of course be obtained from parts worn beyond these limits.

Arrangement of Illustrations

The illustrated pages are laid out to show as far as possible in picture form the repair operations, together with the differences and similarities of the various car units.

Unless otherwise specified all illustrations apply to both the Cadillac and the La Salle.

Identification Numbers

EACH Cadillac and La Salle car when shipped carries an engine number which is also a car serial number. This is the number to be used in filling out license and insurance applications and in general reference to the car. The engine number is stamped on the car in two places: On the name plate on the front face of the left side of the dash and on the crankcase just below the water inlet on the right-hand side.

The various units such as the engine, transmission, steering gear, etc., also carry unit assembly numbers. These are located as described in the specification tables. It is important in ordering parts to give, not only the engine number of the car, but also the unit assembly number of the unit to which the part belongs.

FILE COPY
DO NOT REMOVE

Front Axle

Subject	Cadillac 341		LaSalle 303-328		Specifications	Remarks
Camber of front wheel (angle with vertical)	A	B	303	328	2½°	*Plate 3, Fig. 7*
Angle between steering knuckle bolt and vertical	A	B	....	....	5°	
	...	...	303	328	7½°	
Angle between steering knuckle bolt and wheel spindle	A	B	....	....	97½°	
	...	...	303	328	100°	
Caster angle	A	B[1]	303	328[1]	2½°—3°	Before front axle unit 3-27619 on 341-B cars and 4-8137 on 328 cars.
	...	B[2]	....	328[2]	1°—2°	Beginning with front axle unit 3-27619 on 341-B cars and 4-8137 on 328 cars. See Note 1. *Plate 3, Fig. 6.*
Angle between spring seat and vertical plane of I-beam	A[1]	...	....	....	2½°—3°	Before front axle unit 3-2858.
	...	...	303[1]	....	0°	Before front axle unit 2-16018.
	A[2]	B[1]	....	....	1°—1½°	Beginning with front axle unit 3-2858 on 341-A cars and before front axle unit 3-27619 on 341-B cars. *Plate 4, Fig. 5.*
	...	B[2]	....	....	2½°—3°	Beginning with front axle unit 2-27619.
	...	...	303[2]	328[1]	1¼°—1¾°	Beginning with front axle unit 2-16018 on 303 cars and before front axle unit 4-8137 on 328 cars. *Plate 4, Fig. 6.*
	...	...	....	328[2]	0°	Beginning with front axle unit 4-8137.
Correct installation of I-beam (identification mark)	...	...	303	328[1]	"F" on right spring pad	
	A	B	....	328[2]	"F" on front face of I-beam	
I-beam twist (misalignment between steering knuckle bolts)	A	B	303	328	½° allowable variation between ends	See note 2.
Clearance between steering knuckle bolt and bushing	A	B	....	....	New limits, .0015-.0025 in. Worn limit, not over .005 in.	
	...	...	303	328	New limits, .0005-.0025 in. Worn limit, not over .005 in.	
Pivot balls, out of round	A	B	303	328	Worn limit, not over .010 in.	
Road clearance under front axle	A	B	....	....	8 7/16 inch	
	...	...	303	328	9 3/16 inch	
Steering cross rod adjustment	...	...	303[1]	....	Tighten and back off one cotter pin hole	Before front axle unit 2-16001. *Plate 3, Fig. 4*
	A	B	303[2]	328	Automatic adjustment	Beginning with front axle unit 2-16001 on 303 cars. *Plate 3, Figs. 3-5.*
Steering cross rod springs—Free length	A	B[1]	....	....	1 1/16 in. approximately	Install second-type pivot seat springs in steering cross rod ends before front axle unit 3-21101.
	...	B[2]	....	....	1⅛ in. approximately	

FILE COPY
DO NOT REMOVE

FRONT AXLE

Subject	Cadillac 341		LaSalle 303-328		Specifications	Remarks
	...	...	303	328[1]	$\frac{11}{13}$ in. approximately	Install second-type pivot seat springs in steering cross rod ends before front axle unit 4-3801.
	...	...	....	328[2]	$\frac{21}{32}$ in. approximately	
Compression	A	B[1]	....	....	180-220 lbs. compressed to $\frac{5}{8}$ in.	Install second-type pivot seat springs in steering cross rod ends before front axle unit 3-21101.
	...	B[2]			90-110 lbs. compressed to $\frac{5}{8}$ in.	
	...	...	303	328[1]	180-220 lbs. compressed to $\frac{9}{16}$ in.	Install second-type pivot seat springs in steering cross rod ends before front axle unit 4-3801.
	...	...	....	328[2]	90-110 lbs. compressed to $\frac{9}{16}$ in.	
Steering knuckle thrust bearing adjustment	A	B	....	....	Tighten and back off just enough to free adjustment	Tapered roller bearing. Tighten dust-cap securely against roller bearing. *Plate 1.*
	...	...	303	328	Not over .004 in. end play	Ball bearing. Adjust with shims .003 and .005 in. thick. *Plate 2.*
Stop screw adjustment	A	B	303	328	$\frac{1}{2}$-$\frac{3}{4}$ in. clearance between tire and nearest point of possible interference.	Interference with steering connecting rod on left side and spring on right side. Also shock absorber brackets.
Toe-in of front wheels	...	...	303[1]	....	$\frac{1}{8}$ in. preferable, $\frac{1}{4}$ in. maximum.	Adjust by spacers $\frac{1}{8}$ in. and $\frac{1}{32}$ in. thick. Before front axle unit 2-16001. *Plate 3, Figs. 1-2-4.*
	A	B	303[2]	328	$\frac{1}{8}$ in. preferable, $\frac{1}{4}$ in. maximum.	Adjust by turning steering cross rod. Beginning with front axle unit 2-16001 on 303 cars. *Plate 3, Figs. 1-2-3-5.*
Tread	A	B	303	328	56 in.	
Unit number, location of	A	B	303	328	Top right on I-beam	

1. Caster Angle

To measure the caster angle, use a Bear or Duby Gauge as shown in Plate 3, Figs. 8, 11. Be sure to have all four wheels the same distance off the floor. Floor must be level.

On early 341-A and 303 cars, the spring seats are not machined at the same angle as on later cars. To give these cars the standard caster angle specified in the table, use tapered shims (Fig. 9) between the springs and the axle. Place the thick edges of the shims toward the rear.

2. Straightening Bent Parts

Because of their location the parts of the front axle are more subject to damage by accident than any other part of the chassis. Front axle service, therefore, involves the inspection of parts for alignment and possible straightening.

Heat-treated parts should not be straightened if they are sprung out of alignment more than 5°. To straighten such parts while cold is likely to result in strains and sometimes in cracks not visible to the naked eye. Straightening with heat destroys the effect of previous heat treatment and may result either in overheating, making the steel soft and weak, or in underheating, which will make it brittle and easily broken.

Parts which are not heat-treated may be straightened cold if not sprung out of alignment more than 10°.

Welding of parts subjected to severe strain should never be permitted. A welded part is never as strong as the original, unbroken metal and the heat required for the welding process changes the structure of the metal around the weld, making it coarse and weak.

FILE COPY
DO NOT REMOVE

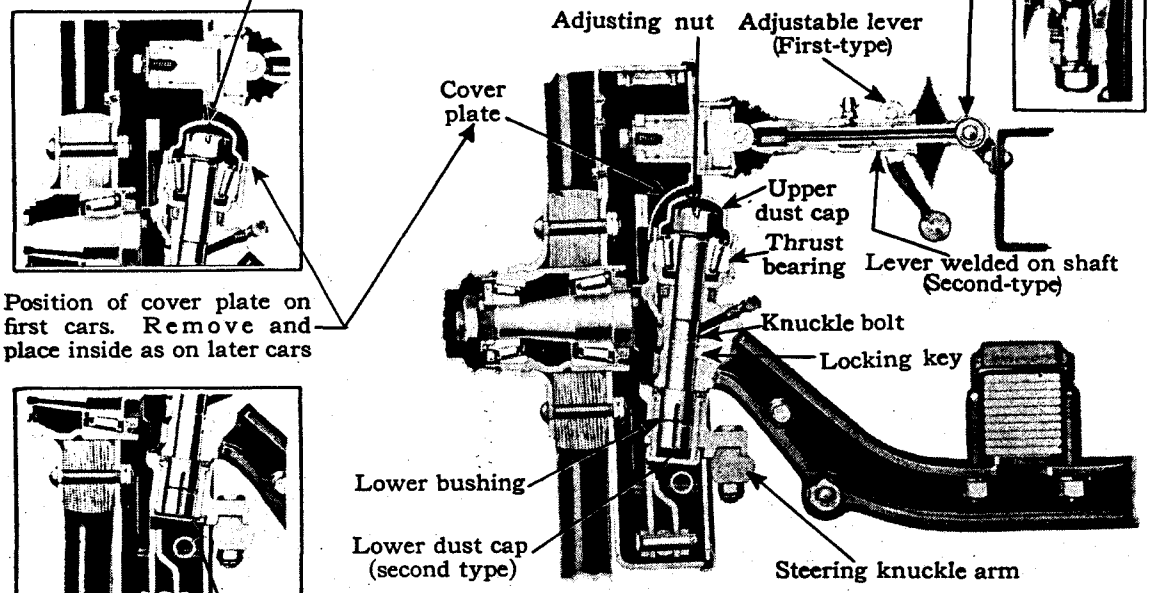

Fig. 1
Cadillac 341-A

First type dust cap attached by cap screws. Avoid forcing grease in under heavy pressure

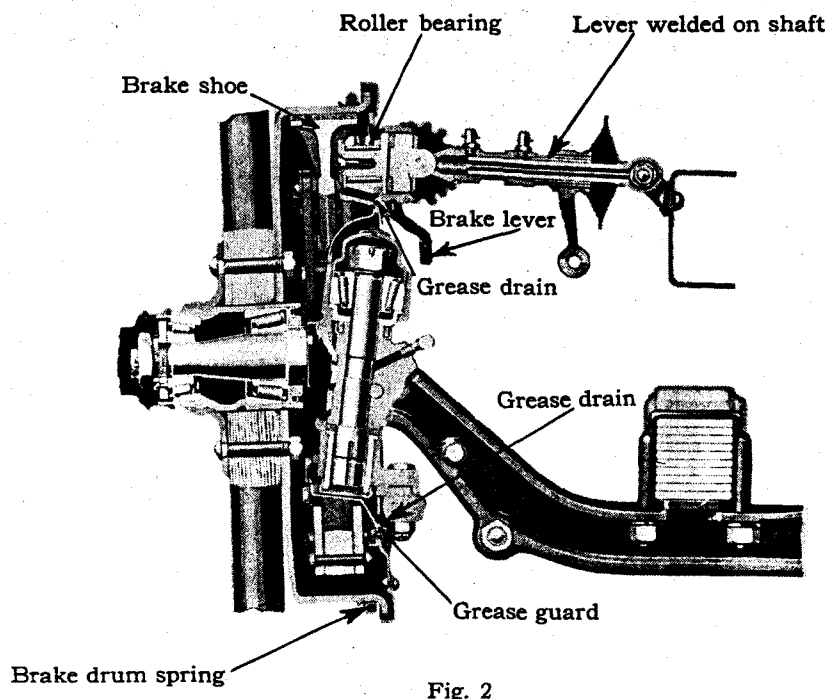

Fig. 2
Cadillac 341-B

Plate 1. Sectional view of Cadillac front wheel hub and steering knuckle.

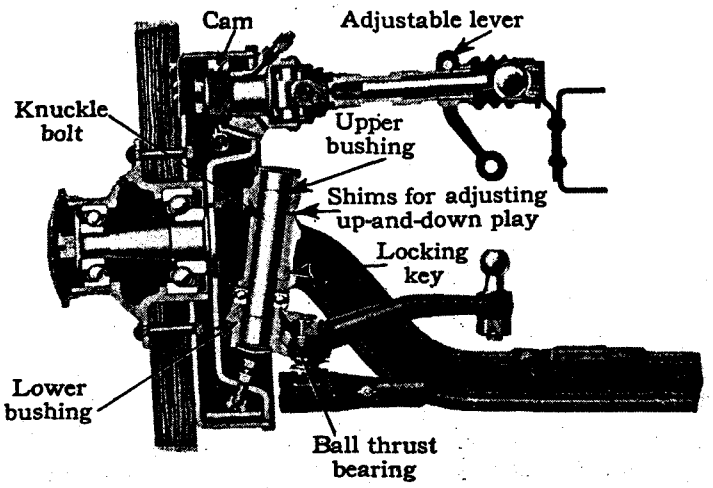

Fig. 1
LaSalle 303
(first type with cam-operated brakes)

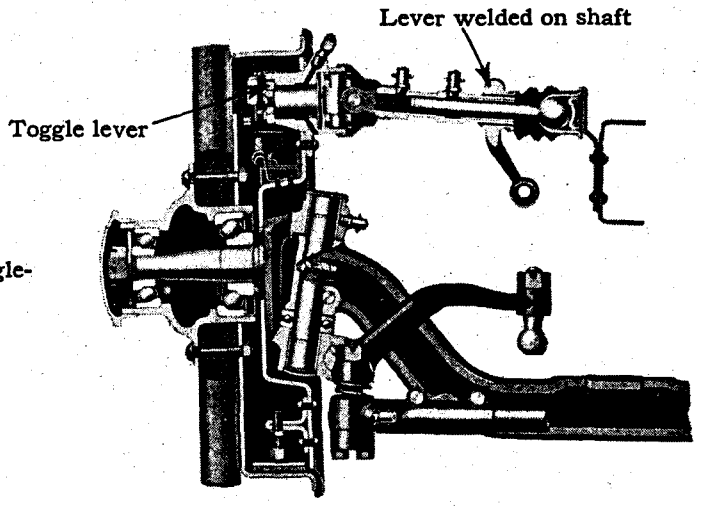

Fig. 2
LaSalle 303
(second type with toggle-operated brakes)

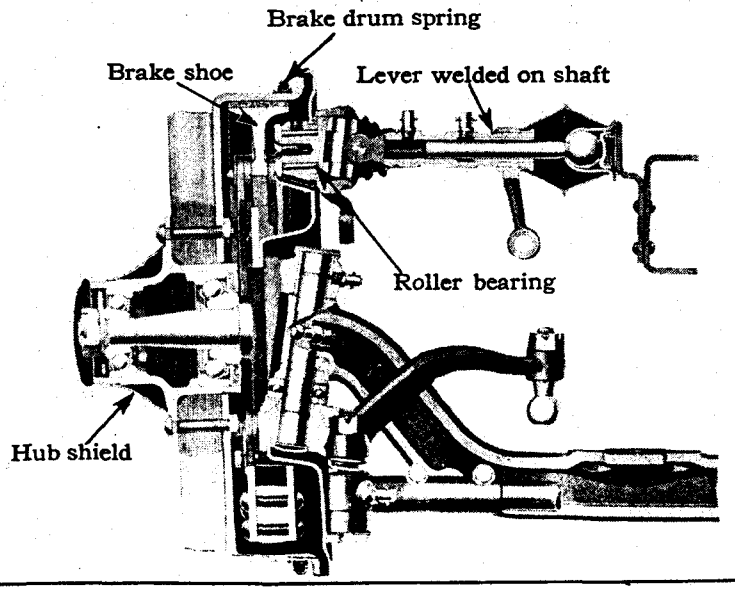

Fig. 3
LaSalle 328

Plate 2. Sectional view of La Salle front wheel hub and steering knuckle.

FILE COPY
DO NOT REMOVE

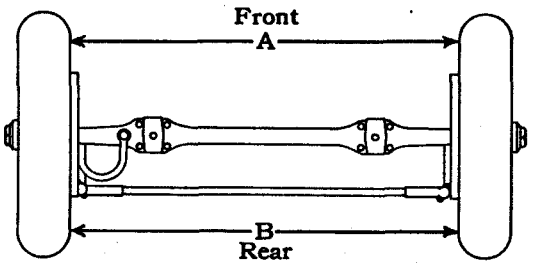

Fig. 1
Front wheel alignment.
A should be 1/8 to 1/4 inch less than B

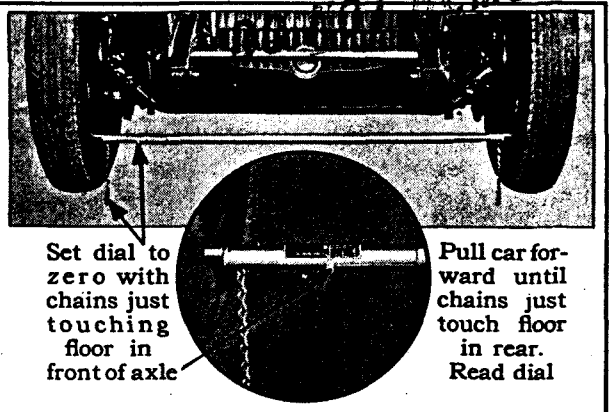

Fig. 2
Front wheel alignment gauge

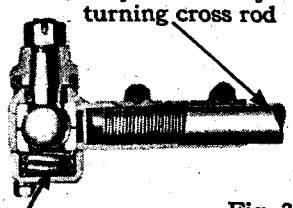

Fig. 3
Steering cross rod joint
Cadillac 341-A and B

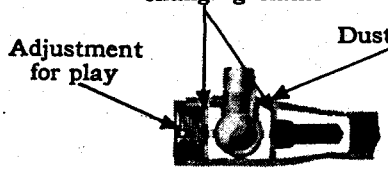

Fig. 4
Steering cross rod joint
LaSalle 303 (first type)

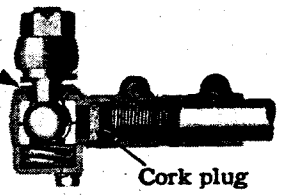

Fig. 5
Steering cross rod joint
LaSalle 303 (second type) and 328

Fig. 6

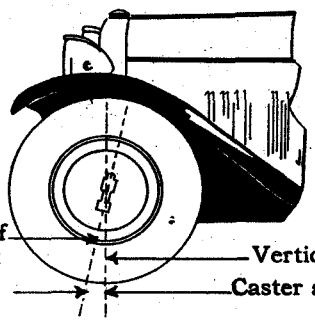

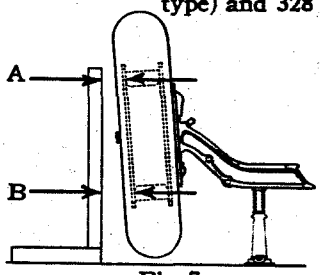

Fig. 7
Front wheel camber.
A should be 3/4 inch less than B

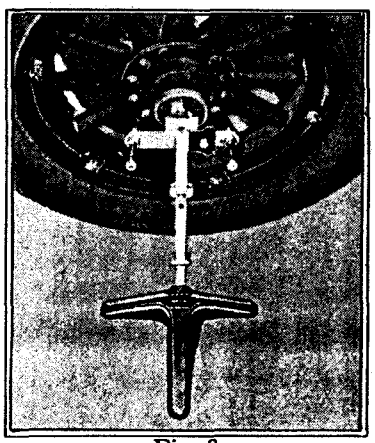

Fig. 8
Bear gauge for measuring caster angle

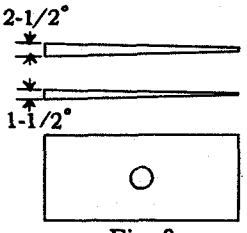

Fig. 9
Wedges for changing caster angle

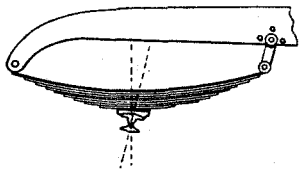

Fig. 10
To increase caster, insert wedges with thick edge toward rear

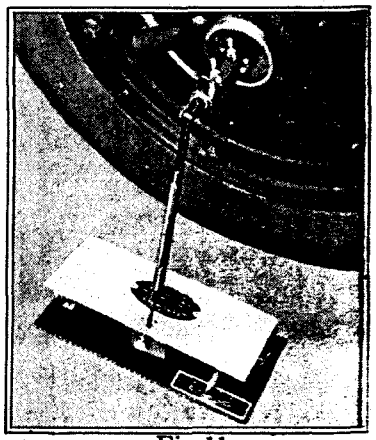

Fig. 11
Duby gauge for measuring caster and camber

Plate 3. Front Wheel Alignment, Camber and Caster.

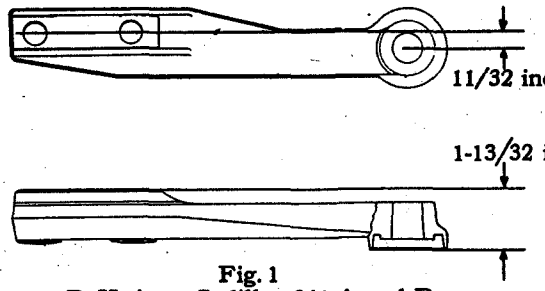

Fig. 1
R. H. Arm, Cadillac 341-A and B

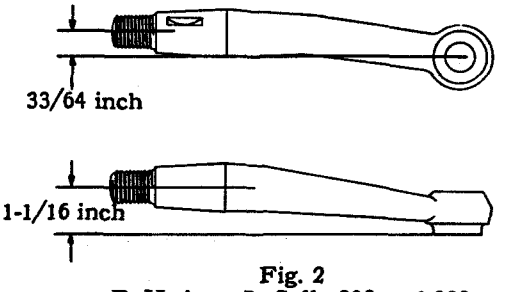

Fig. 2
R. H. Arm, LaSalle 303 and 328

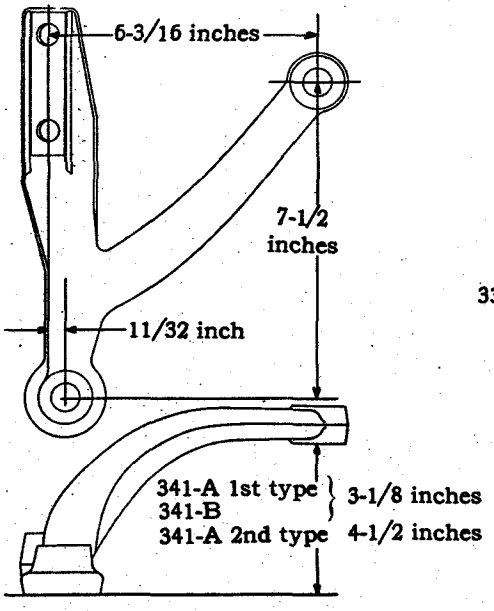

Fig. 3
L. H. Arm, Cadillac 341-A and B

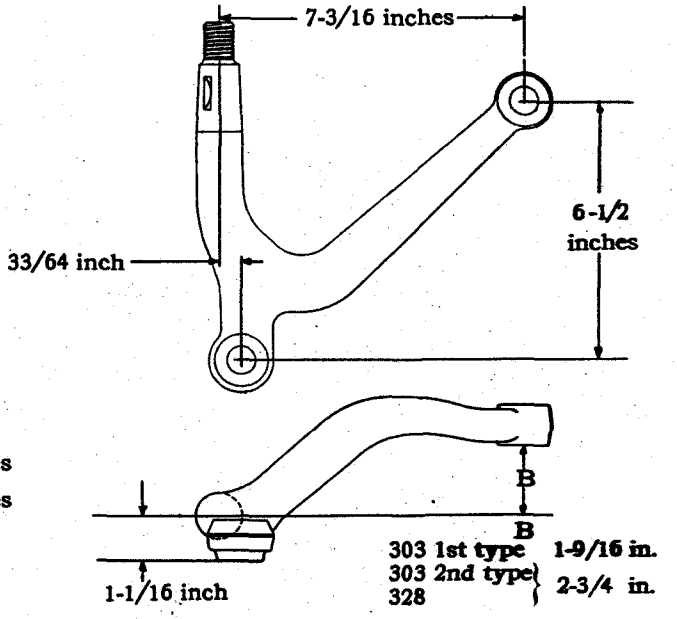

Fig. 4
L. H. Arm, LaSalle 303 and 328

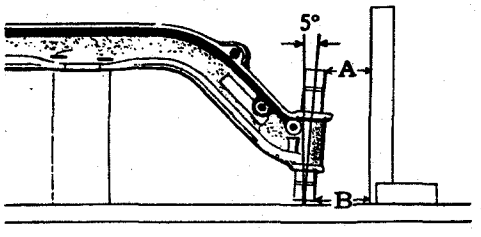

Fig. 5
Axle I-beam, Cadillac
A should be 1 inch
less than B
C should be 1/2 inch
less than D

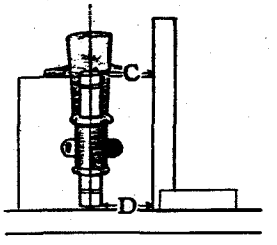

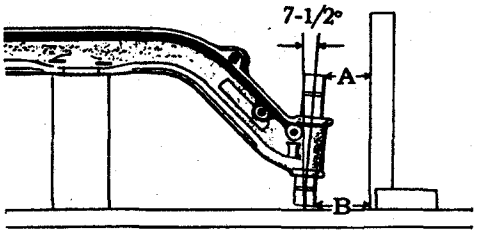

Fig. 6
Axle I-beam, LaSalle
A should be 55/64 inch
less than B
The dimensions C and
D should be equal

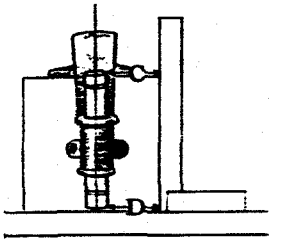

Plate 4. Alignment of axle I-beam and steering knuckle arms.

Rear Axle and Torsion Tube

Subject	Cadillac 341		LaSalle 303-328		Specifications	Remarks
Axle shaft, clearance between driver and recesses in wheel hub	A	B	....	....	New limits, .0005-.0025 in. Worn limit, not over .005 in.	
Axle shaft length, left side	A	B	....	....	30 1/16 in. overall	
	...	...	303	....	31 1/16 in. overall	
	...	...	....	328	32 5/8 in. overall	
Axle shaft length, right side	A	B	....	....	33 7/16 in. overall	
	...	...	303	....	34 5/16 in. overall	
	...	...	....	328	35 1/4 in. overall	
Axle shaft, out of true	A	B	303	328	Not over 1/32 inch	
Axle housing, out of true	A	B	303	328	Not over 3/32 inch	Ideal gauge, Tool 102789, can be used to check alignment of rear wheels as well as front wheels. *Plate 7, Fig. 4.*
Differential carrier, installation of	A	B	303	328	.....	See Note 1
Drive shaft, clearance between sleeve and splines on pinion shaft	A	B	303	328	New limits, .000-.003 in. Worn limit, not over .006 in.	
Driveshaft, clearance between splines and hub of universal joint	A	B	303	328	New limits, .001-.005 in. Worn limit, not over .006 in.	
Driveshaft, length	A	...	....	....	140 in. wheelbase—61 1/4 in.	
					152 in. wheelbase—73 1/4 in.	
	...	...	303	....	125 in. wheelbase—50 7/8 in.	
					134 in. wheelbase—59 7/8 in.	
	...	B	....	....	140 in. wheelbase—62 11/64 in.	
					152 in. wheelbase—74 11/64 in.	
	...	...	....	328	125 in. wheelbase—49 1/8 in.	
					134 in. wheelbase—58 1/8 in.	
Driveshaft, out of true	A	B	303	328	Not over .010 in.	
Gear ratio, high	A	B	....	....	4.39:1	
	...	...	303	328	4.07:1	
Gear ratio, medium	A	B	....	....	4.75:1	Stamped on top of differential carrier.
	...	...	303	328	4.54:1	
Gear ratio, low	A	B	....	....	5.08:1	
	...	...	303	328	4.91:1	
Gear adjustment or replacement	A	B	303	328	.....	See Note 2.
Lubrication	A	B	303	328	.....	See Lubrication Table, page 83.
Removal of rear axle and torsion tube assembly	A	B	303	328	.....	See Note 3.
Road clearance under rear axle	A	B	....	....	8 7/16 inch	At center under differential.
	...	...	303	328	7 13/16 inch	
Tread	...	...	303	....	56 inches	
	A	B	....	328	58 inches	
Type of axle	A	B	....	....	Full floating	
	...	...	303	328	Three-quarter floating	
Unit number, location of	A	B	303	328	Rear surface of housing, right side	

1. Lubrication of Pinion Bearings

Differential carrier assemblies shipped by the Parts Division have no lubricant in the bearings, as all the lubricant is washed out before the assemblies are shipped.

Before an assembly is installed in a car, it is important that care be taken to see that the lubricant reaches the front pinion bearing. It is not enough simply to install the assembly and add lubricant to the proper level. Before the lubricant has a chance to work up into the pinion bearing the bearing may be damaged.

The best plan is to stand the assembly up on the front end and pour in enough lubricant to make sure that the ball bearings are thoroughly lubricated. The assembly can then be installed and the necessary additional lubricant added to bring up the level. In this way lubrication of the ball bearings is provided for until the oil in the housing works up through the bearings.

2. Gear Adjustment

The rear axle gears are correctly adjusted when the axle is assembled, and their positions must not be changed. If the gear and pinion require replacement, the entire differential carrier assembly should be replaced. Differential carrier assemblies for replacement can be obtained from the Factory Parts Department on an exchange basis.

It is very important that every assembly returned to the factory be accompanied by the original shims.

3. Removal of Rear Axle and Torsion Tube

It is customary for work on the rear axle to remove the axle and torsion tube as an assembly by disconnecting the torsion tube from the ball-and-socket joint and removing the spring clips. On 341 Cadillac cars the rear ends of the rear springs must also be disconnected because the springs are underslung.

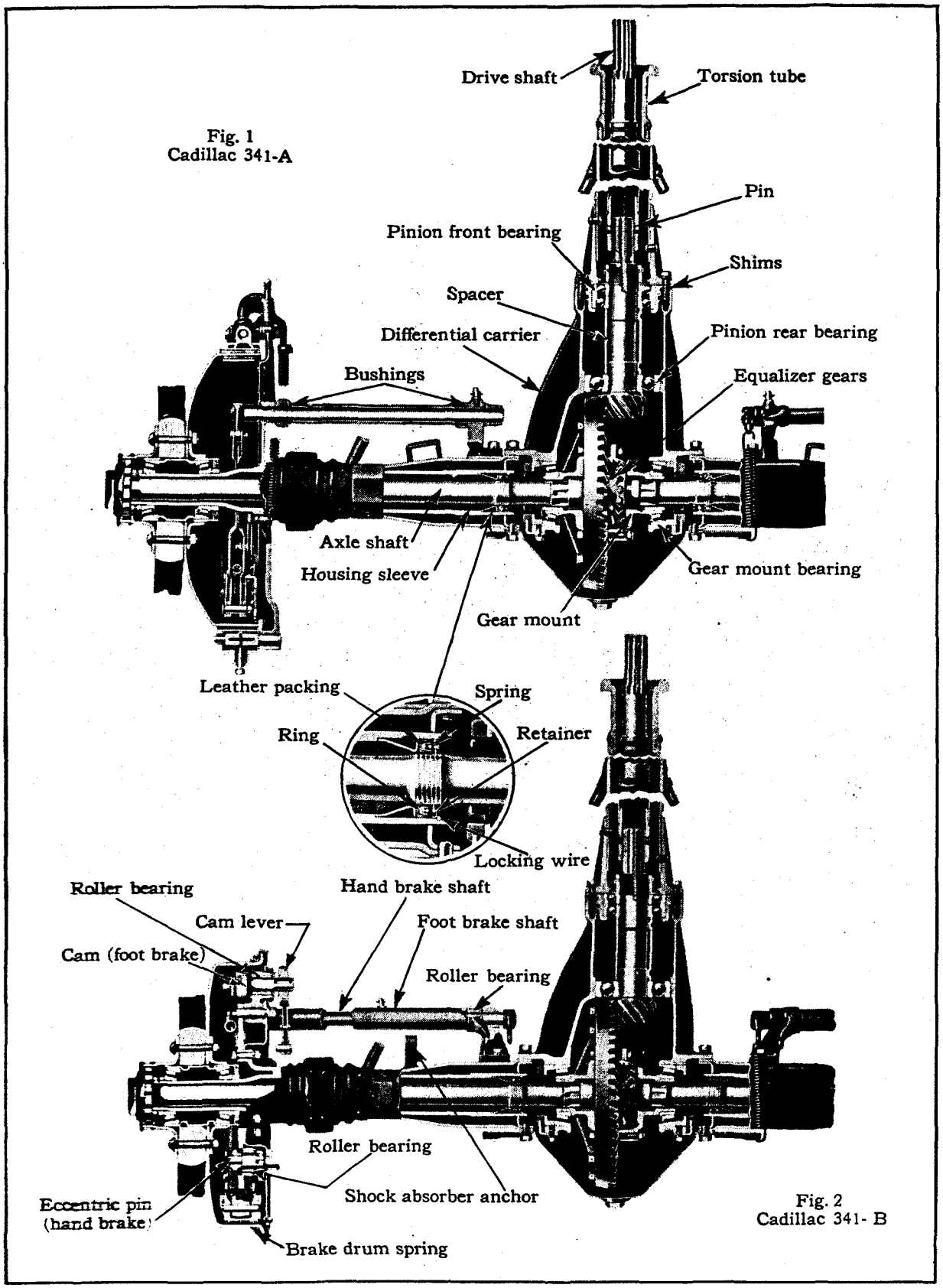

Plate 5. Sectional View of Cadillac Rear Axle.

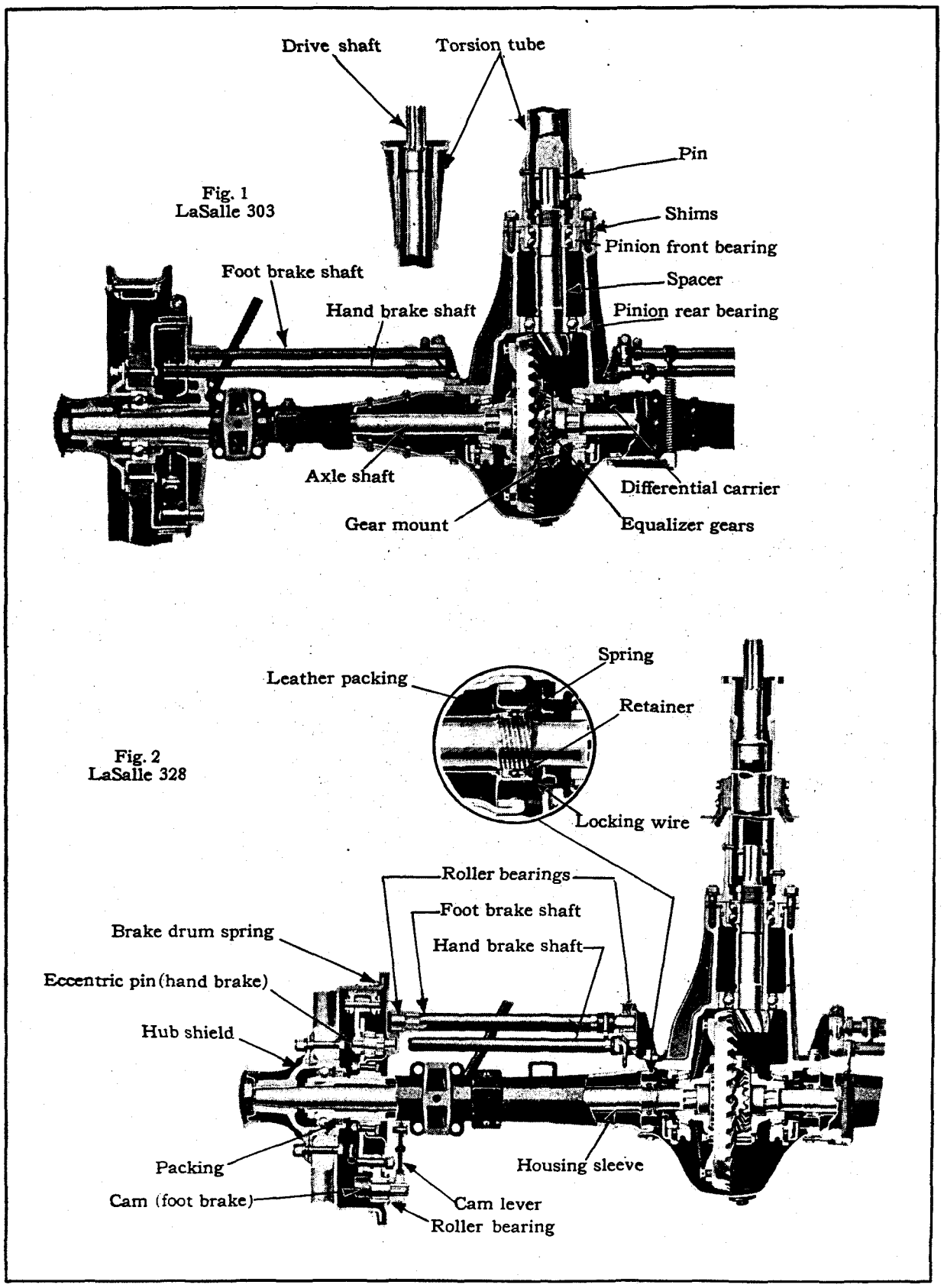

Plate 6. Sectional View of La Salle Rear Axle.

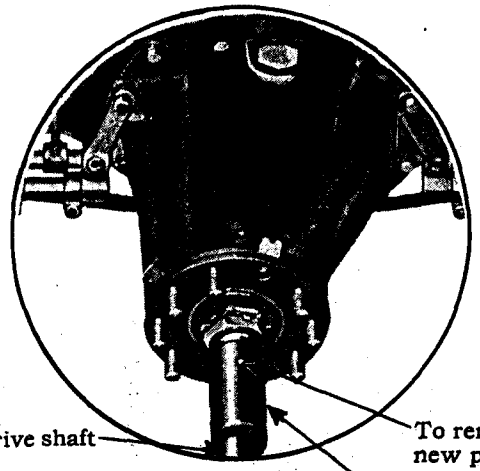

Fig. 1
Rear end of drive shaft

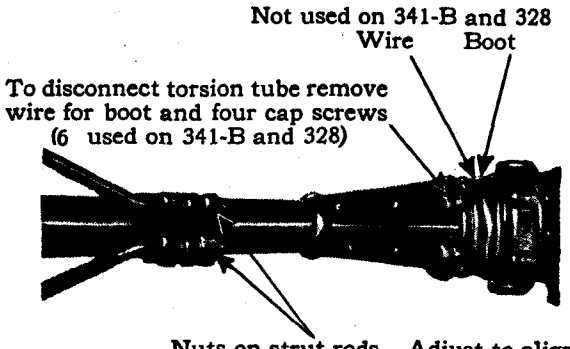

Fig. 2
Front end of torsion tube

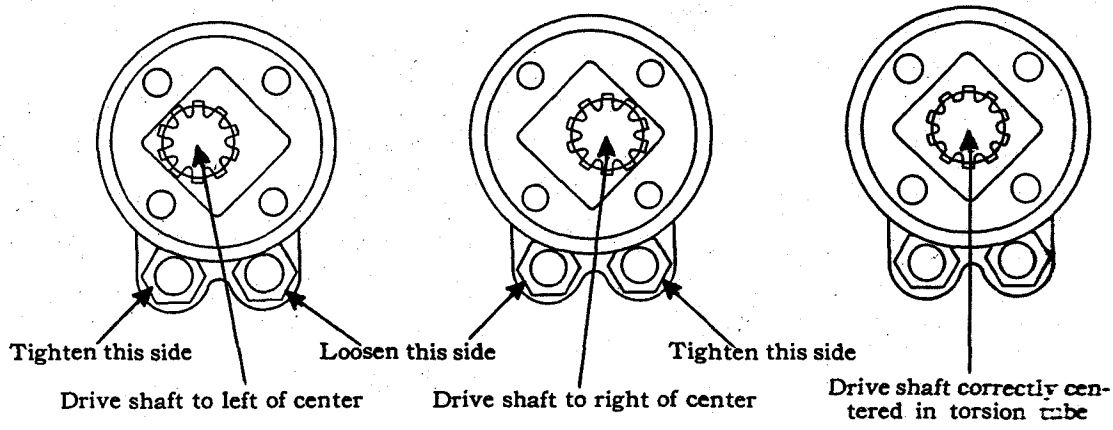

Fig. 3
Alignment of drive shaft.
Rear axle and torsion tube removed, torsion tube pointing straight up

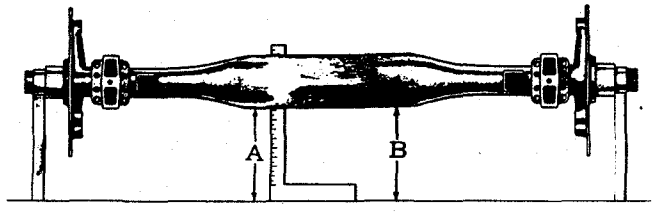

A and B when rear face of housing is down must equal A and B when front face is down

Fig. 4
Rear axle housing on V-blocks for testing

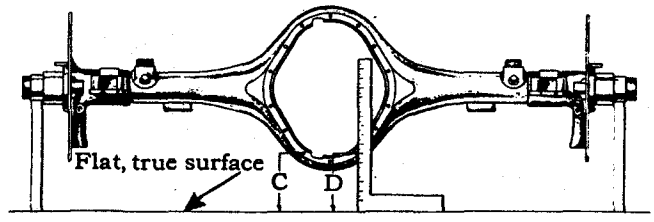

C and D when housing is right side up must equal C and D when housing is upside down

Plate 7. Torsion tube, drive shaft and axle housing.

Brakes

Subject	Cadillac 341	LaSalle 303-328	Specifications	Remarks
FOOT BRAKES				
Front and Rear (Shoe type)				
Clearance between lining and drum	B	328		Clearance determined by number of turns of adjusting nut. *Plates 10, 11. Figs. 2, 4.*
Drum, nominal inside diameter	B		16½ in., front and rear	
		328	15 in., front and rear	
Drum, out of round	B	328	Not over .007 in.	
Drum, thickness	B	328	¼ in.	Drums not to be ground in service over .040 in. less than minimum original thickness.
Lining (Front and Rear)			Short Shoe / Long Shoe	
Length without lead tip	B		7⅛ in. / 16¾ in.	Beginning with front axle unit 3-31441 and rear axle unit 3-31525 on 341-B cars and front axle unit 4-13424 and rear axle unit 4-13409 on 328 cars lead tips are installed at the trailing end of the long shoes. Replace lead tips when installing new linings, using lining rivets.
		328	6 11/32 in. / 15⅜ in.	
Length with lead tip	B		/ 15 3/16 in.	
		328	/ 13 13/16 in.	
Lining, thickness	B	328	3/16 in.	
Lining, width	B		2¼ in.	
		328	2 in.	
Pull back spring for rear brake, free length	B		4¾ in., approximately	
		328	4¼ in., approximately	
Pull back spring for rear brake, tension	B		32-37 lbs stretched to 7¾ in.	Measured between loops
		328	19-24 lbs stretched to 6½ in.	Measured between loops
FRONT (Band type)				
Clearance between lining and drum	A	303	.015 in.	
Drum, nominal outside diameter	A[1]		16 in.	Before front axle unit 3-6001.
	A[2]		17 in.	Beginning with front axle unit 3-6001.
		303[1]	14 in.	Before front axle unit 2-16608.
		303[2]	16 in.	Beginning with front axle unit 2-16608.
Drum, out of round	A	303	Not over .015 in.	
Drum, thickness	A		13/64 in.	Drums not to be ground in service over .040 in. less than minimum original thickness.
		303	3/16 in.	
Lining, length	A[1]		41¾ in., approximately	Before front axle unit 3-6001. See note 1.
	A[2]		45¾ in., approximately	Beginning with front axle unit 3-6001. See note 1.
		303[1]	36⅞ in., approximately	Before front axle unit 2-16608. See note 1.
		303[2]	41½ in., approximately	Beginning with front axle unit 2-16608. See note 1
Lining, thickness	A	303	3/16 in.	
Lining, width	A		2¼ in.	
		303	2 in.	
REAR (Band type)				
Clearance between lining and drum	A	303	.030 in.	

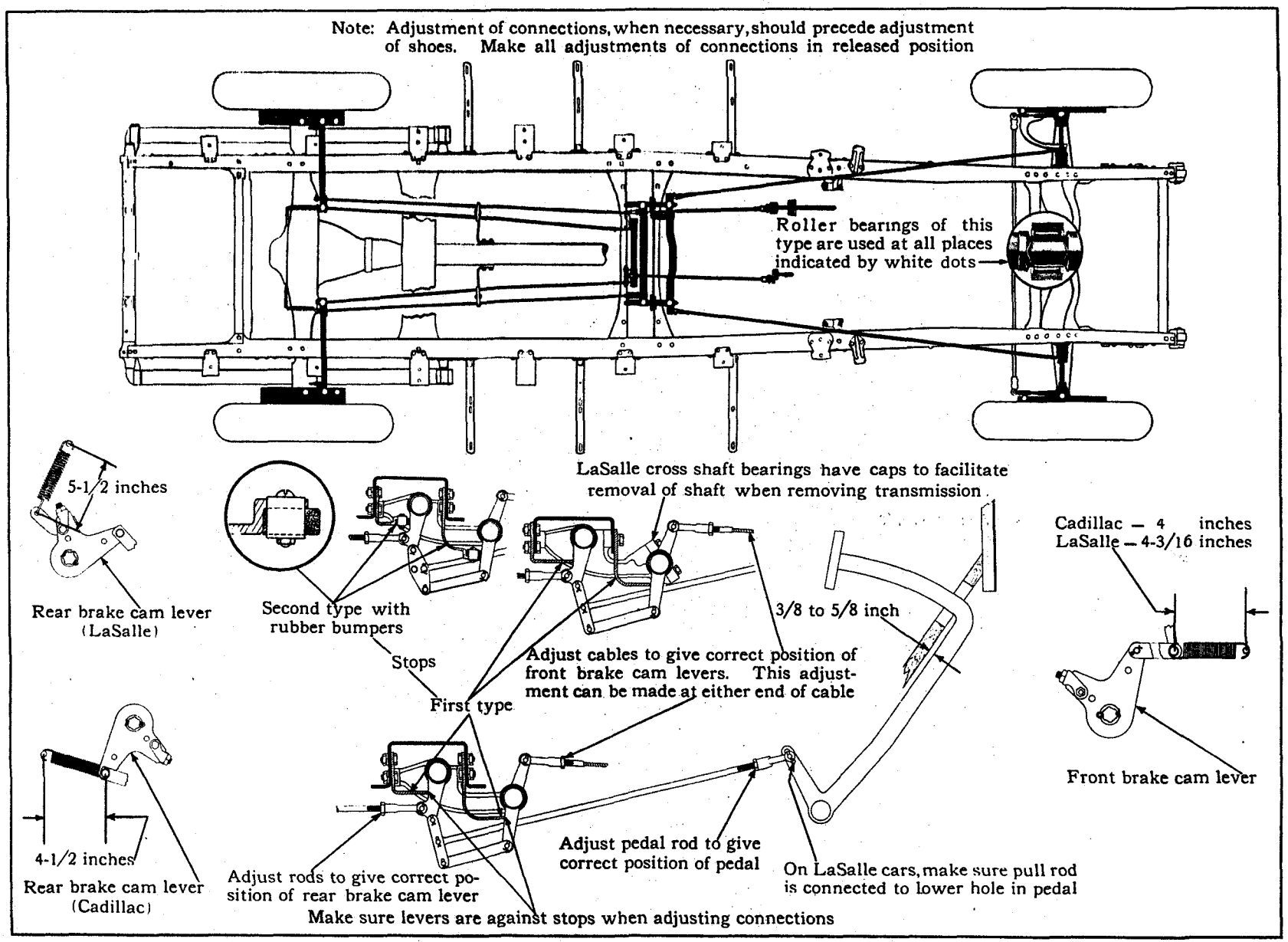

Plate 8. Adjustment of Cadillac 341-B and La Salle 328 brake connections—first type

Subject	Cadillac 341		LaSalle 303-328		Specifications	Remarks
Drum, nominal outside diameter	A	...	....	....	16 in.	
	...	...	303	....	14 in.	
Drum, out of round	A	...	303	....	Not over .015 in.	
Drum, thickness	A	...	....	....	$\frac{13}{64}$ in.	
	...	...	303	....	$\frac{3}{16}$ in.	
Lining, length	A	...	....	....	49½ in., approximately	See note 1.
	...	...	303	....	39 in., approximately	
Lining, thickness	A	...	303	....	$\frac{3}{16}$ in.	
Lining, width	A[1]	...	....	....	2½ in.	Before rear axle unit 3-12529.
	A[2]	...	....	....	2¼ in.	Beginning with rear axle unit 3-12529.
	...	...	303	....	2 in.	
Pull back spring for rear brake rod, free length	A	...	303	....	4¼ in., approximately	
Pull back spring for rear brake rod, tension	A	...	303	....	19-24 lbs. stretched to 6½ in. between loops	
HAND BRAKES						
Clearance between rocker shaft and bushings	A	B	303	328	New limits .004 to .008 in. Worn limit, not over .012 in.	
Lining, length	A	...	....	....	40⅜ in., approximately	See note 1.
	...	...	303	....	40$\frac{11}{16}$ in., approximately	
	...	B	....	....	10$\frac{5}{16}$ in.	
	...	...	....	328	9⅛ in.	
Lining, thickness	A	B	....	328	$\frac{3}{16}$ in.	
	...	...	303	....	$\frac{5}{32}$ in.	
Lining, width	A	...	....	328	2 in.	
	...	...	303	....	1⅝ in.	
	...	B	....	....	2¼ in.	

1. Length of Lining

The lengths given for the lining on 341-A and 303 cars allow for cutting to length to suit each individual band. The most economical method is to purchase lining in rolls and cut to length when installing. Lining for external bands should be cut $\frac{3}{16}$ in. longer than the band. Lining for internal bands should be cut $\frac{3}{16}$ in. shorter than the band.

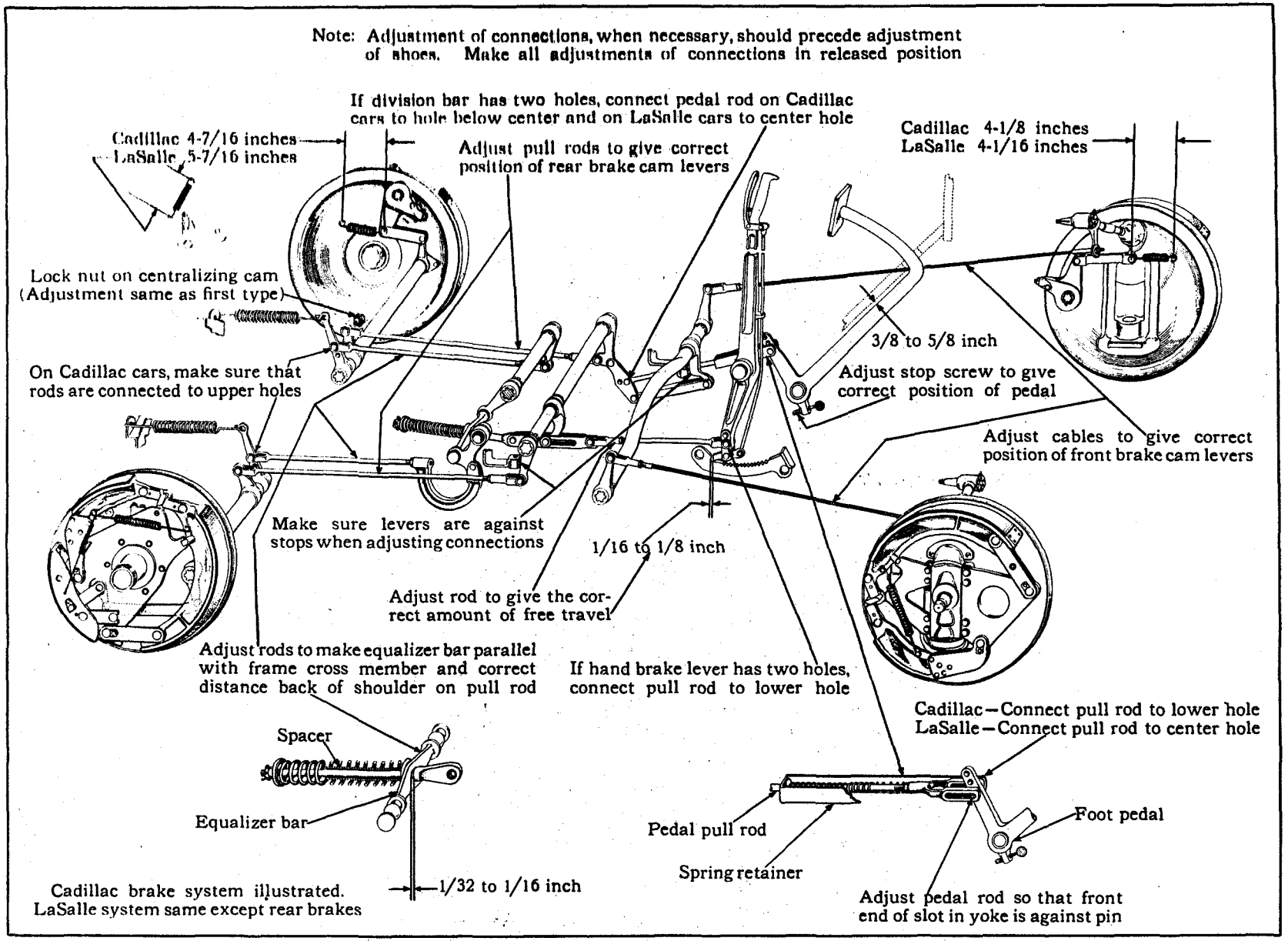

Plate 9. Adjustment of Cadillac 341-B and La Salle 328 brake connections—second type.

Note: Unless brake connections are known to be O. K., check them as shown in Plate 8 before proceeding with shoe adjustments

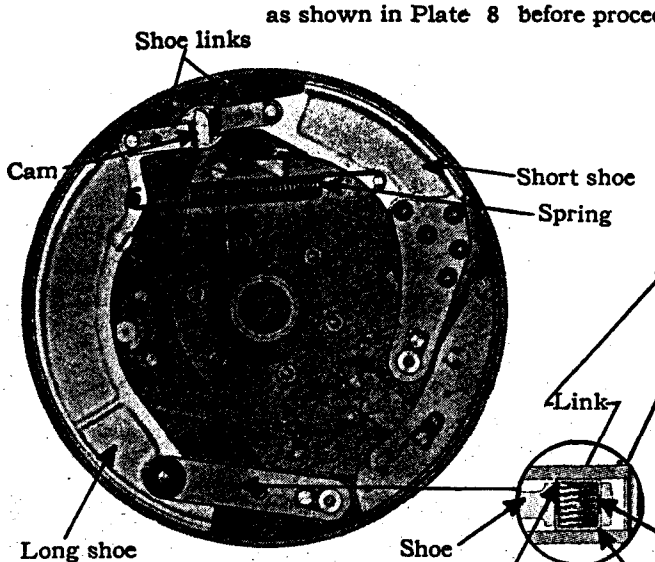

Fig. 1
Rear foot brake

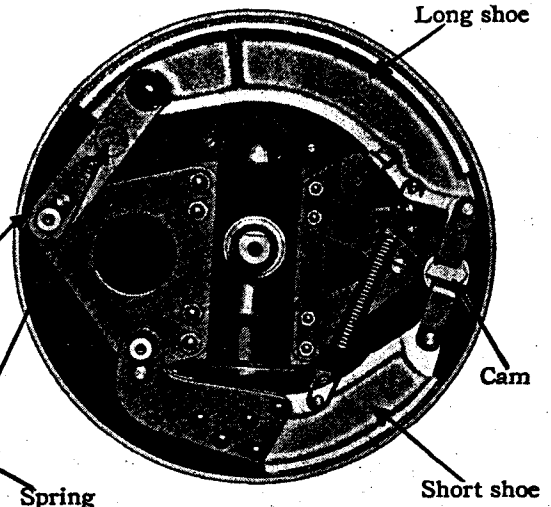

Fig. 3
Front brake

Loosen nut and apply brakes firmly to centralize cam bracket. Tighten nut before releasing brakes. (See Fig. 7 for cam bracket)

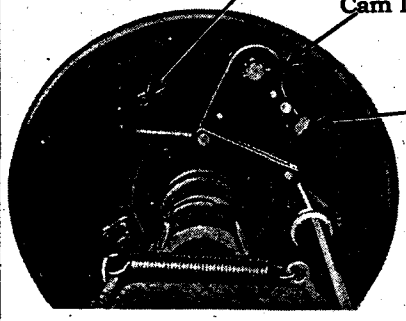

Fig. 2
Rear brake adjustment

Check for equalization between right and left. If O. K., turn down all four adjusting nuts same number of turns until pedal travel is approximately 2-1/4 inches. (1-1/6 turns equals 1 inch pedal travel)

If equalization is not O. K., first turn down nuts until all four wheels just drag; then back off nuts same number of turns to give proper pedal travel. Recheck for equalization and make further adjustment if necessary

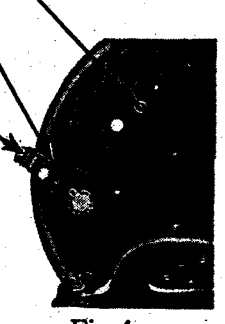

Fig. 4
Front brake adjustment

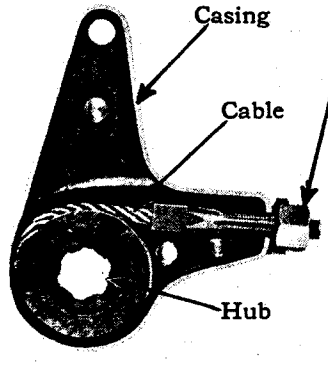

Fig. 5
Cam lever with half of casing removed

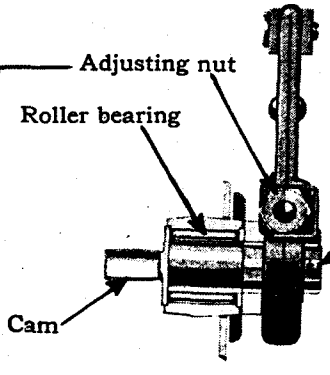

Fig. 6
Sectional view of cam shaft bearing

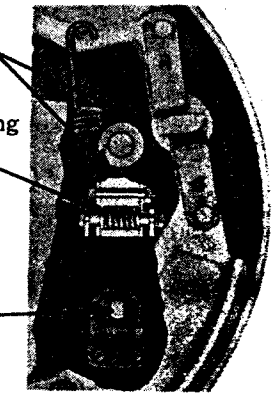

Fig. 7
Sectional view of cam centralizing bracket

Plate 10. Adjustment of Cadillac 341-B front and rear foot brakes.

Note: Unless brake connections are known to be O. K., check them as shown in Plate 9 before proceeding with shoe adjustments

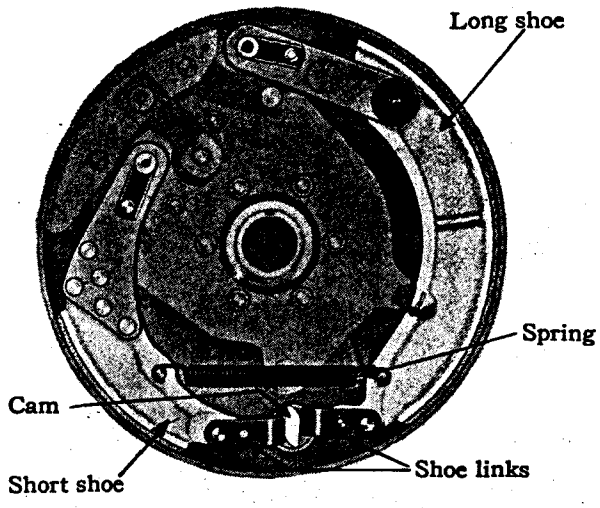

Fig. 1
Rear foot brake

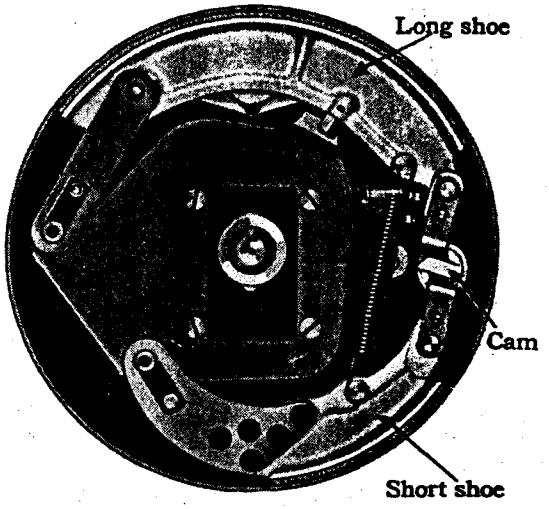

Fig. 3
Front brake

Loosen nut and apply brakes firmly to centralize cam bracket. Tighten nut before releasing brakes. (See Fig. 7 for cam bracket)

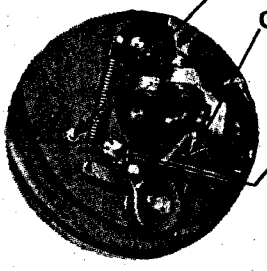

Fig. 2
Rear brake adjustment

Check for equalization between right and left. If O. K., turn down all four adjusting nuts same number of turns until pedal travel is approximately 2-1/4 inches. (1-1/6 turns equals 1 inch pedal travel)

If equalization is not O. K., first turn down nuts until all four wheels just drag; then back off nuts same number of turns to give proper pedal travel. Recheck for equalization and make further adjustment if necessary

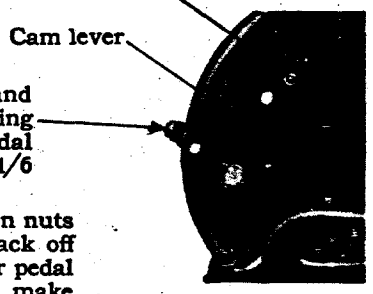

Fig. 4
Front brake adjustment

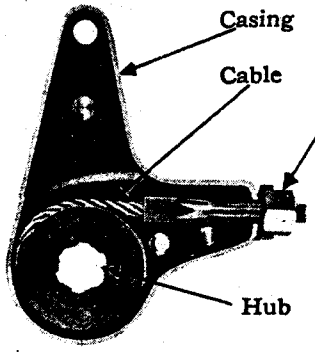

Fig. 5
Cam lever with half of casing removed

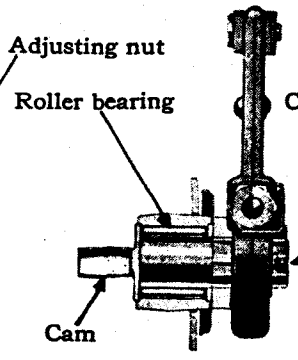

Fig. 6
Sectional view of cam shaft bearing

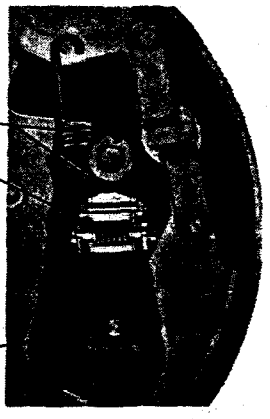

Fig. 7
Sectional view of cam centralizing bracket

Plate 11. Adjustment of La Salle 328 front and rear foot brakes.

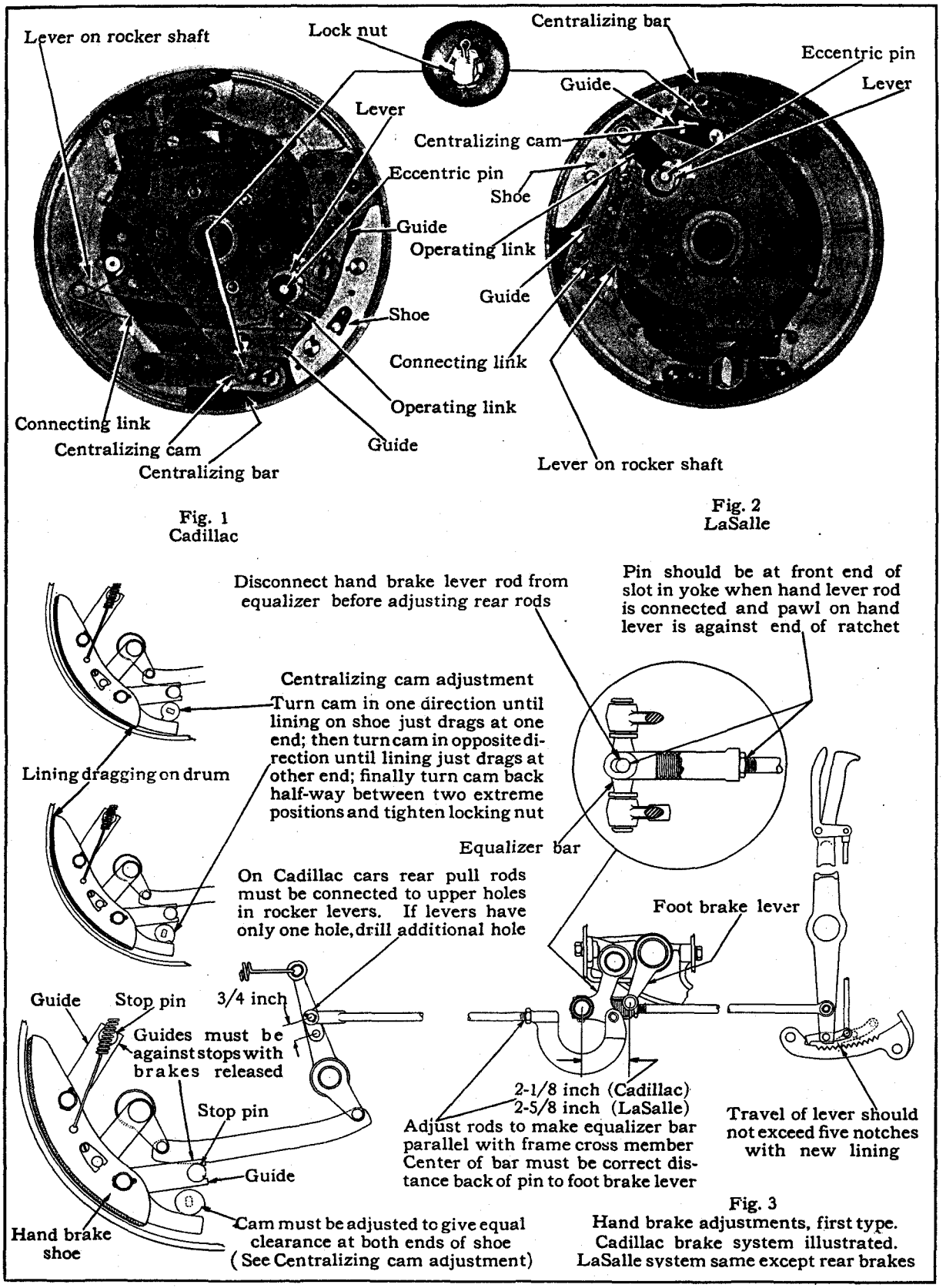

Plate 12. Cadillac 341-B and La Salle 328 hand brakes—first type.

February, 1929

Note: Adjustment of connections must precede adjustment of bands. Connections must also be freed up before adjustment. Make all adjustments of connections in released position

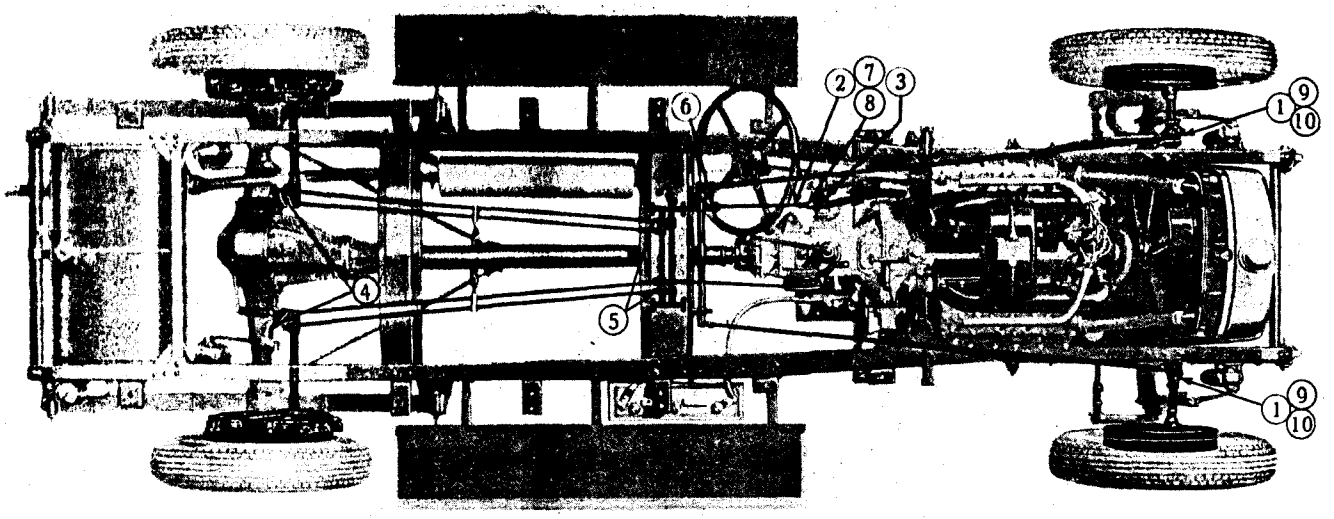

Preliminary
1 Back off nuts on front ends of cables
2 Remove pedal rod and yoke assembly

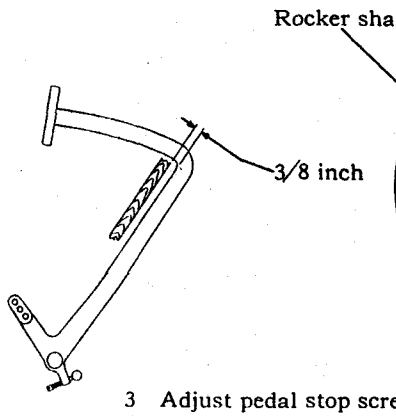

3 Adjust pedal stop screw

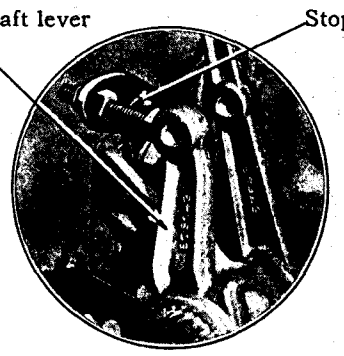

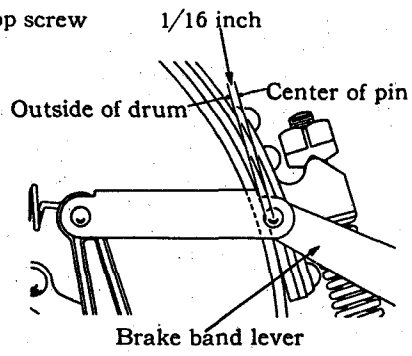

Gauge 109603

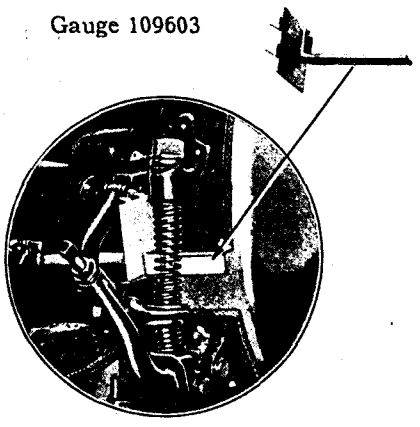

4 Adjust stop screws in rocker shaft levers to give correct position of brake band levers. Preferably use gauge

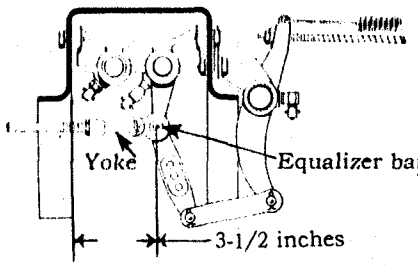

5 Adjust yokes on rods to give correct position of equalizer bar. Preferably use gauge

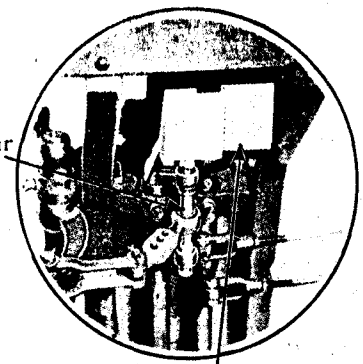

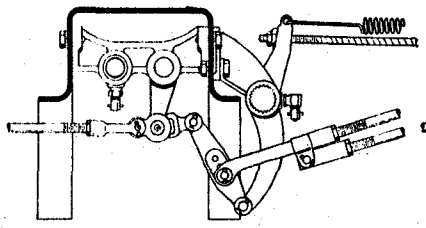

First type hook-up.
Use bottom hole in division bar

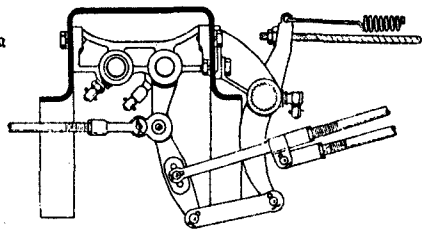

Second type hook-up.
Use middle hole in division bar

6 Connect rear end of pedal rod assembly to division bar

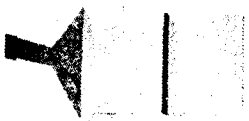

Gauge 109602

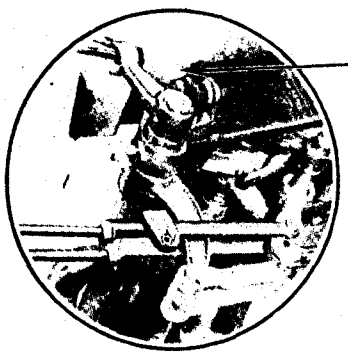

7 Adjust yoke on lower pedal rod to give correct position of levers on front brake cross shaft. Preferably use gauge

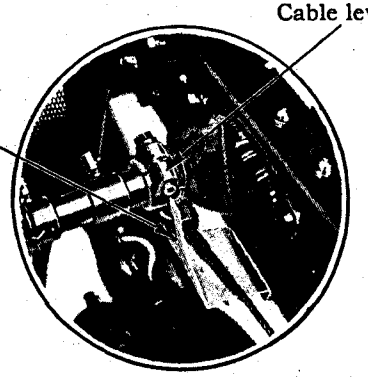

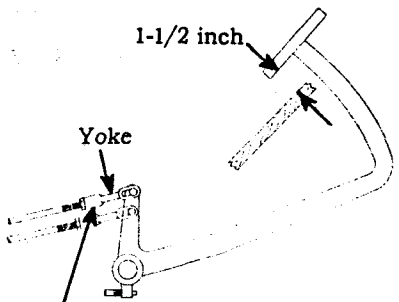

8 Adjust yoke on upper rod so second stage takes effect when pedal is 1-1/2 inches from toe board

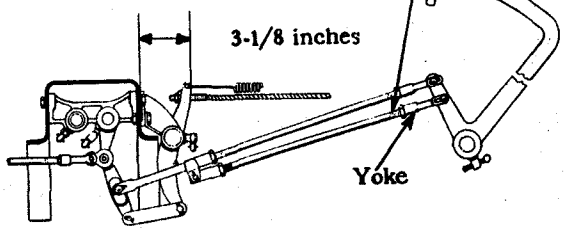

9 Check position of cable levers. Preferably use gauge

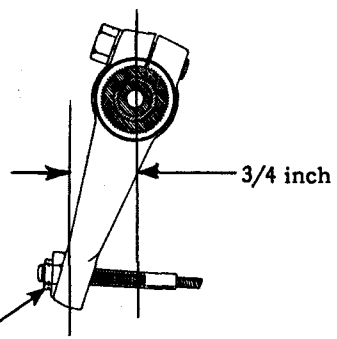

10 Adjust cable nuts to take up slack in cables

Note: Adjustment of connections must precede adjustment of bands. Connections must also be freed up before adjustment. Make all adjustments of connections in released position

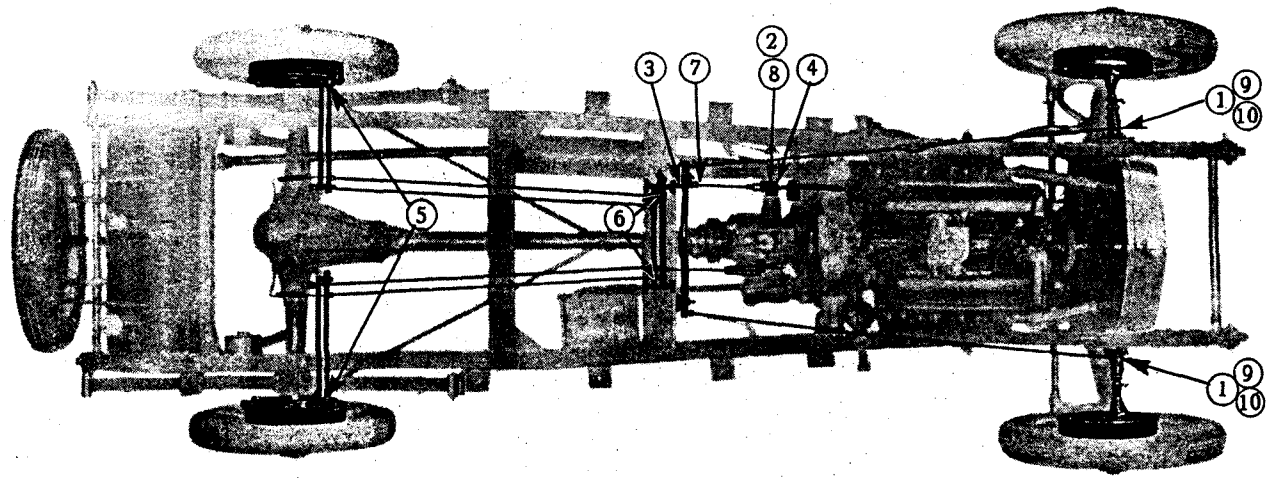

Preliminary
1 Back off nuts on front ends of cables
2 Disconnect pedal rod from pedal
3 Disconnect division bar link

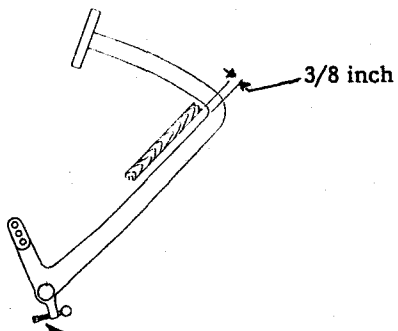

4 Adjust pedal stop screw

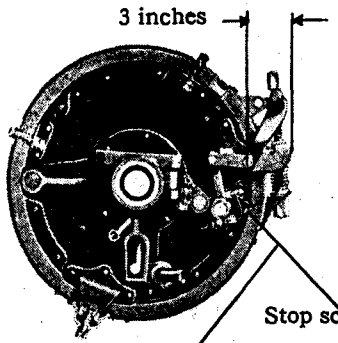

5 Adjust stop screw to give correct position of lever. Preferably use gauge



Gauge 109419

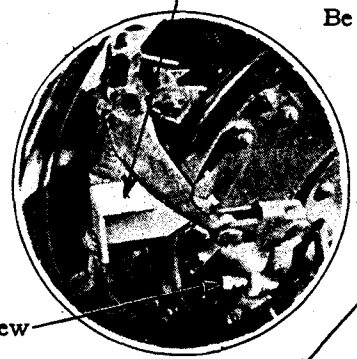

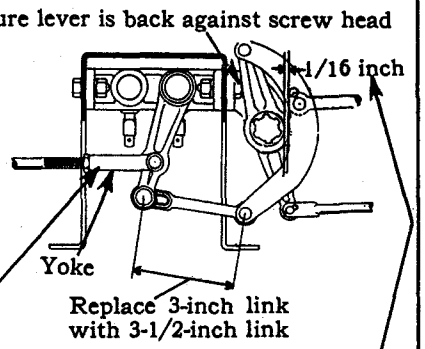

6 Adjust yokes on rods so that division bar will clear lever on cross shaft when link is connected

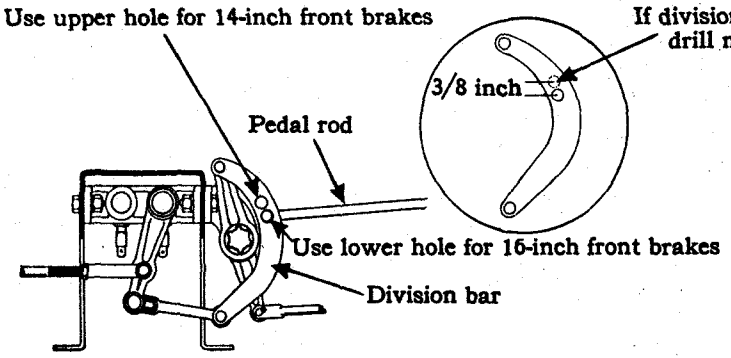

7 Make sure pedal rod is connected to proper hole in division bar

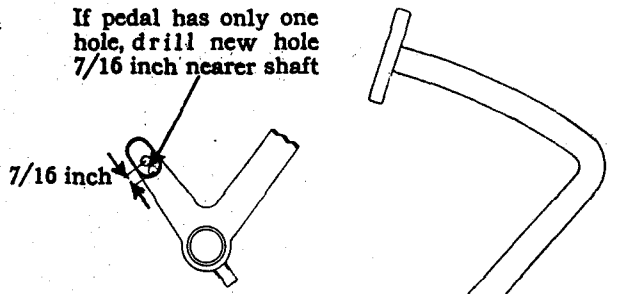

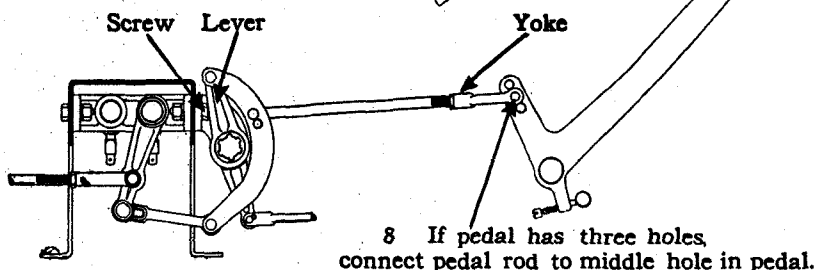

8 If pedal has three holes, connect pedal rod to middle hole in pedal. Adjust yoke so lever clears screw in bracket

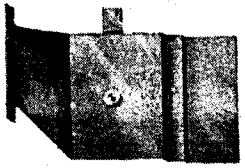

Gauge 109420

9 Check position of cable levers. Preferably use gauge. (Omit this step on all cars with 14-inch front brake drums and on cars with 16-inch drums which have levers welded on shaft)

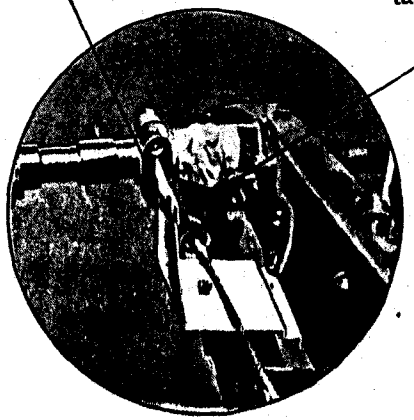

10 Adjust cable nuts to take up slack in cables

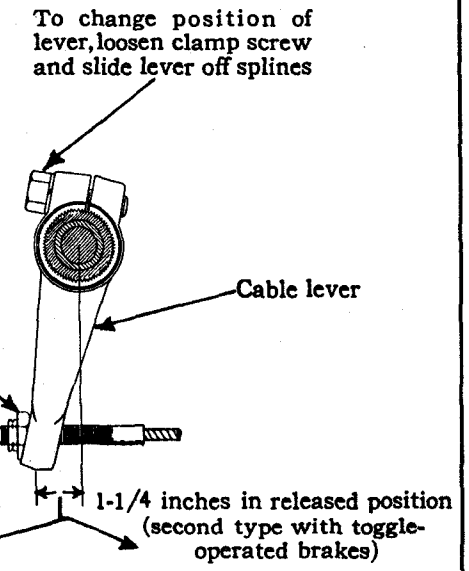

Note: Unless brake connections are known to be O. K., check them as shown in Plate 13 before proceeding with band adjustments

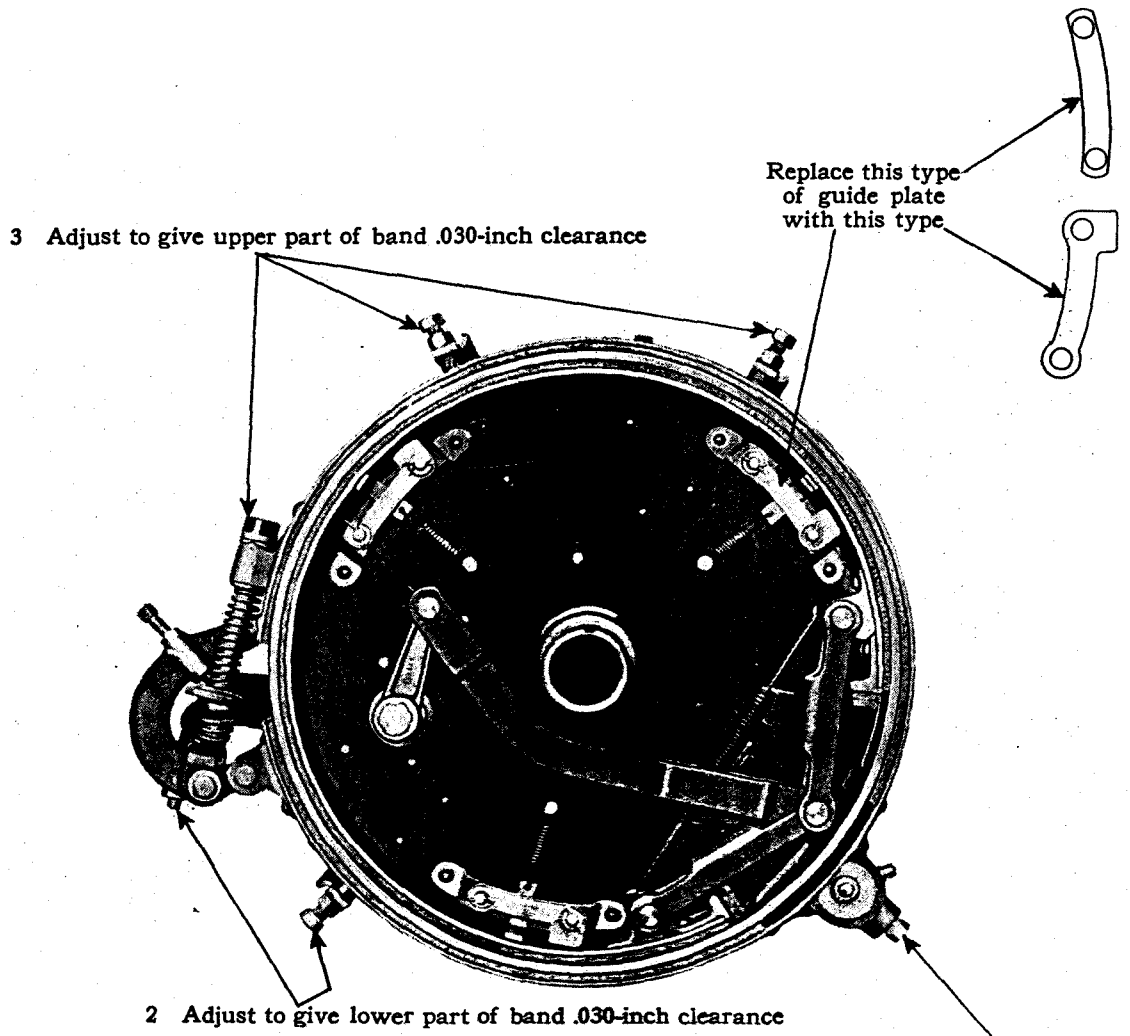

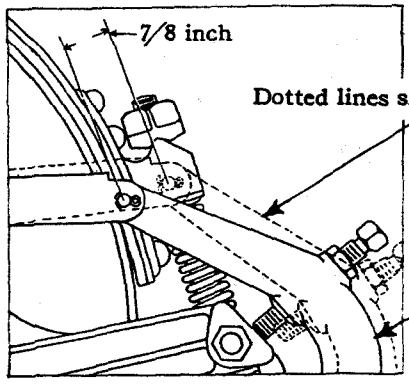

5 Check travel of lever from released to applied position. Take up or back off adjustments to give approximately 7/8-inch travel

Plate 15. Adjustment of Cadillac 341-A rear foot brakes.

Note: Unless brake connections are known to be O. K., check them as shown in Plate 14 before proceeding with band adjustments

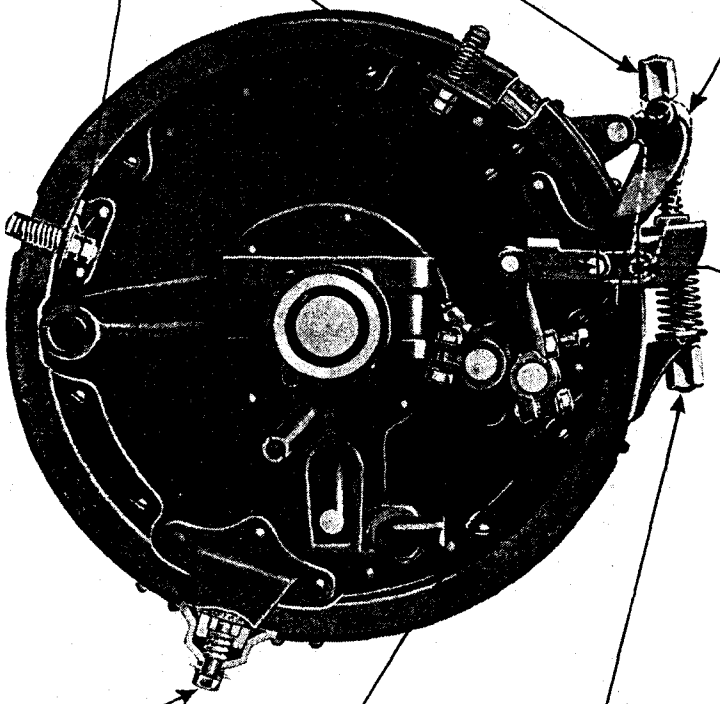

Plate 16. Adjustment of La Salle 303 rear foot brakes.

Note: Unless brake connections are known to be O. K., check them as shown in Plate 14 before proceeding with band adjustments

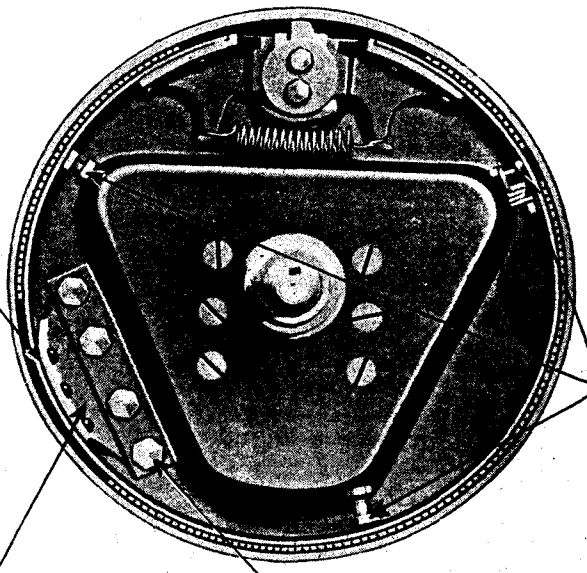

If anti-squeak is used between anchor plate and dust shield, remove and replace with thin canvas

2 Adjust stop screws to give .015-inch clearance

Anchor screws must be drawn tight

1 Adjust anchor in and out to give .015-inch clearance and up and down to centralize band

If lining stands away here, move anchor down

If lining stands away here, move anchor up

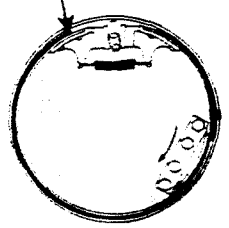

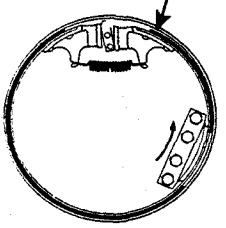

Gauge 109420

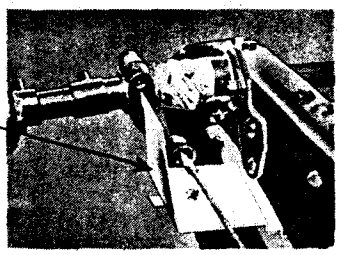

4 Check position of cable levers with brakes applied. Preferably use gauge. Change position of lever on splined shaft as necessary

3 Adjust nuts on cables to complete band adjustment and give .015-inch clearance all around

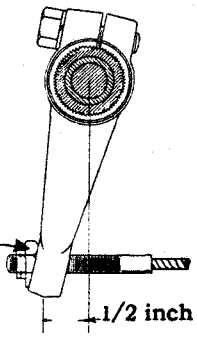

1/2 inch in applied position

Plate 17. Adjustment of La Salle 303 front brakes—first type.

Note: Unless brake connections are known to be O. K., check them as shown in Plates 13,14 before proceeding with band adjustments

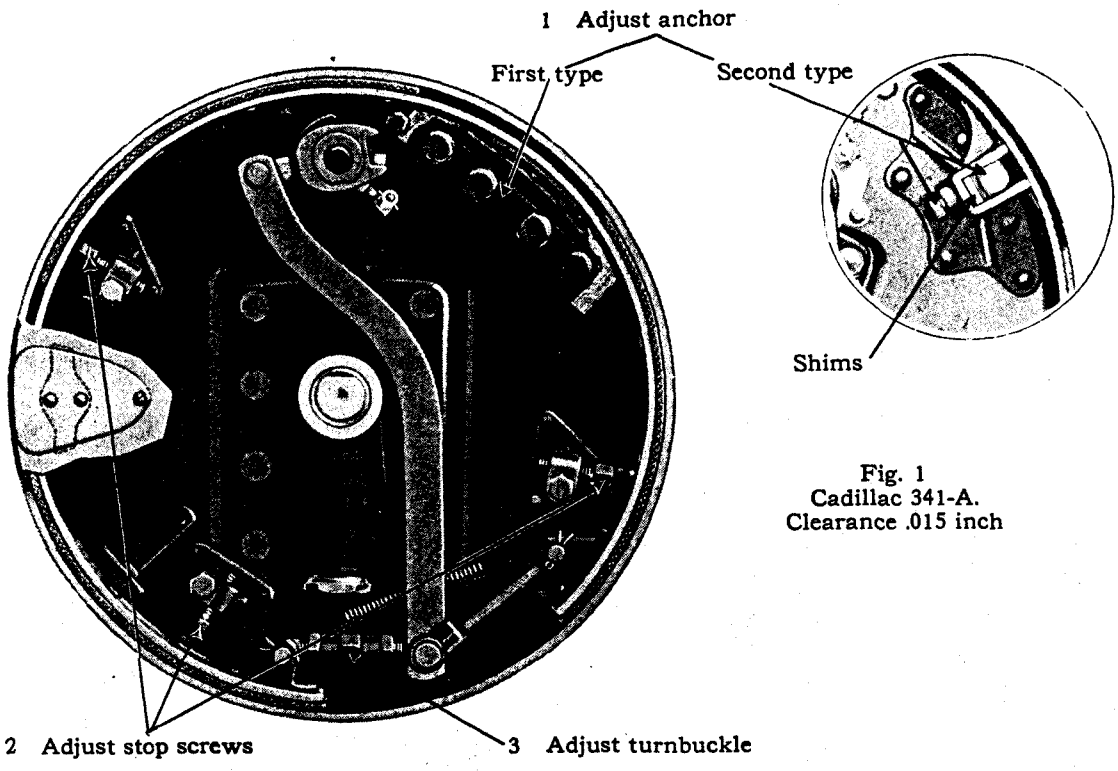

Fig. 1
Cadillac 341-A.
Clearance .015 inch

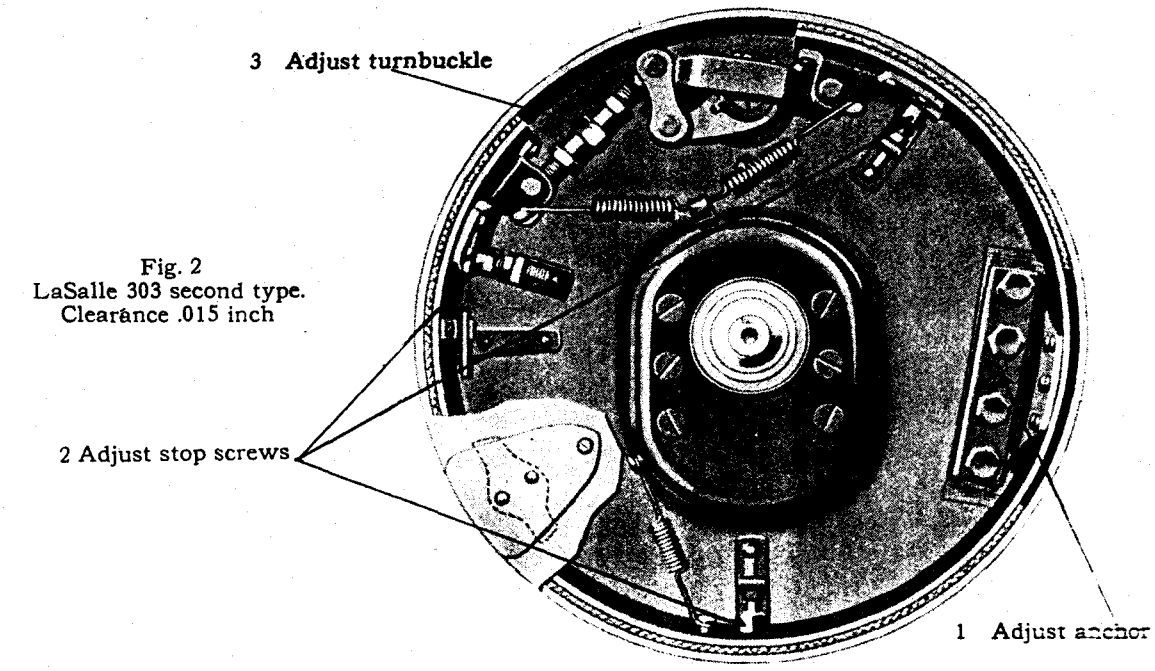

Fig. 2
LaSalle 303 second type.
Clearance .015 inch

Plate 18. Adjustment of front brakes, Cadillac 341-A and La Salle 303—second type.

Clutch

Subject	Cadillac 341		LaSalle 303-328		Specifications	Remarks
PLATE TYPE						After engine unit 2-12001 on 303 cars.
Clearance between driving plates and driving pins	A	B	303[2]	328	New limits, .005—.008 in. Worn limit, not over .010 in.	
Clearance between hub and splines on clutch connection shaft	A	B	303[2]	328	New limits, .0005—.002 in. Worn limit, not over.005 in.	
Clearance between release bearing sleeve and transmission bearing cap	A	B	303[2]	328	New limits, .001—.004 in. Worn limit, not over .006 in.	
Clearance between release shaft and bearings in transmission case	A	...	....	....	New limits, .003—.006 in. Worn limit, not over .010 in.	
Clutch pedal, free movement	A	B	303[2]	328	7/8—1 1/8 in.	
Clutch spring compression	A	B	303[2]	328	67—73 lbs. at 1 3/8 in.	
Clutch spring, number	A	B	303[2]	328	12	
Disc facing diameter, inside	A	B	303[2]	328	6 1/2 in.	
Disc facing diameter, outside	A	B	303[2]	328	9 1/2 in.	
Disc facing, number	A	B	303[2]	328	4	
Disc facing, thickness	A	B	303[2]	328	.125—.130 in.	
Disc with facings, thickness	A	B	303[2]	328	New limits, .305—.315 in. Worn limit, not less than .250 in.	See note 1.
Release bearing	A[1]	...	....	....	.....	See note 2.
Release bearing pull-back spring, free length	A	...	303[2]	....	2 1/4 in., approxmately	
Release bearing pull-back spring, tension	A	B	303[2]	328	6—8 lbs. when stretched to 3 3/8 in. between loops	
Removal of clutch	A	B	303[2]	328	.....	See note 3. Before engine unit 2-12001 on 303 cars.
MULTIPLE DISC TYPE						
Clearance between driven discs and teeth on hub. (Except rear disc)	...	...	303[1]	....	Worn limit, not over .008 in.	Fit rear disc tight on hub; next to rear disc, snug sliding fit.
Clearance between teeth on driving discs and teeth on flywheel. (Except rear disc)	....	...	303[1]	....	Worn limit, not over .010 in.	Rear disc, snug sliding fit in flywheel.
Clearance between release bearing sleeve and transmission bearing cap	...	...	303[1]	....	New limits, .001—.004 in. Worn limit, not over .006 in.	
Clutch pedal, free movement	...	...	303[1]	....	7/8—1 1/8 in.	
Clutch spring, compression	...	...	303[1]	....	Not under 420 lbs. at 2 11/32 in.	
Disc facing diameter, inside	...	...	303[1]	....	6 11/16 in.	
Disc facing diameter, outside	...	...	303[1]	....	7 5/8 in.	
Disc facing, number	...	...	303[1]	....	10	
Disc facing, thickness	...	...	303[1]	....	.130—.140 in.	

Subject	Cadillac 341	LaSalle 303-328	Specifications	Remarks
Disc, installation of		303[1]		See note 4.
Release bearing pull-back spring, free length		303[1]	1½ in., approximately	
Release bearingpull- back spring, tension		303[1]	6—8 lbs. at 1⅞ in. between loops.	
Thickness of driving disc with facing		303[1]	Not under $\frac{5}{16}$ in.	

1. Refacing Plate-Type Clutch

Replacement of the clutch driven discs with facings is recommended rather than refacing the original discs. The reason for this is because the surface of the facing must be ground after it is riveted to the disc, to insure the correct thickness. If the facing is too thick the disc will drag on the center plate. As it is impractical to grind the discs in service, the practice of replacing the discs and facing must be followed.

2. Clutch Release Bearing

On a few of the first 341-A cars, the clutch release bearing cannot be removed from the sleeve. If the bearing on these cars requires replacement, replace the sleeve and bearing as a unit. On later cars the sleeve has two holes through which the bearing can be reached to force it off the sleeve.

3. Removal of Plate-Type Clutch

Extreme care must be taken when removing the transmission to support the rear end so as to hold the transmission in perfect alignment with the clutch until the clutch connection shaft has been pulled *all the way out* of the clutch hub.

If the rear end of the transmission is allowed to drop down or is raised too high while the clutch connection shaft is still in the clutch hub, the clutch driven discs will be sprung out of shape. *This must be avoided.*

On cars which do not have the long piloting studs on the sides of the crankcase use special studs (Tool number 109222) provided for these cars. *Plate 60 Fig 1.*

4. Assembling Multiple Disc Clutch

The rear disc in the clutch is thicker than the other discs. This plate is fitted in the clutch driver at the factory and is marked to indicate its position in relation to the driver. When re-installing the clutch, make sure the marked tooth on the driver goes between the two marked teeth on the rear disc.

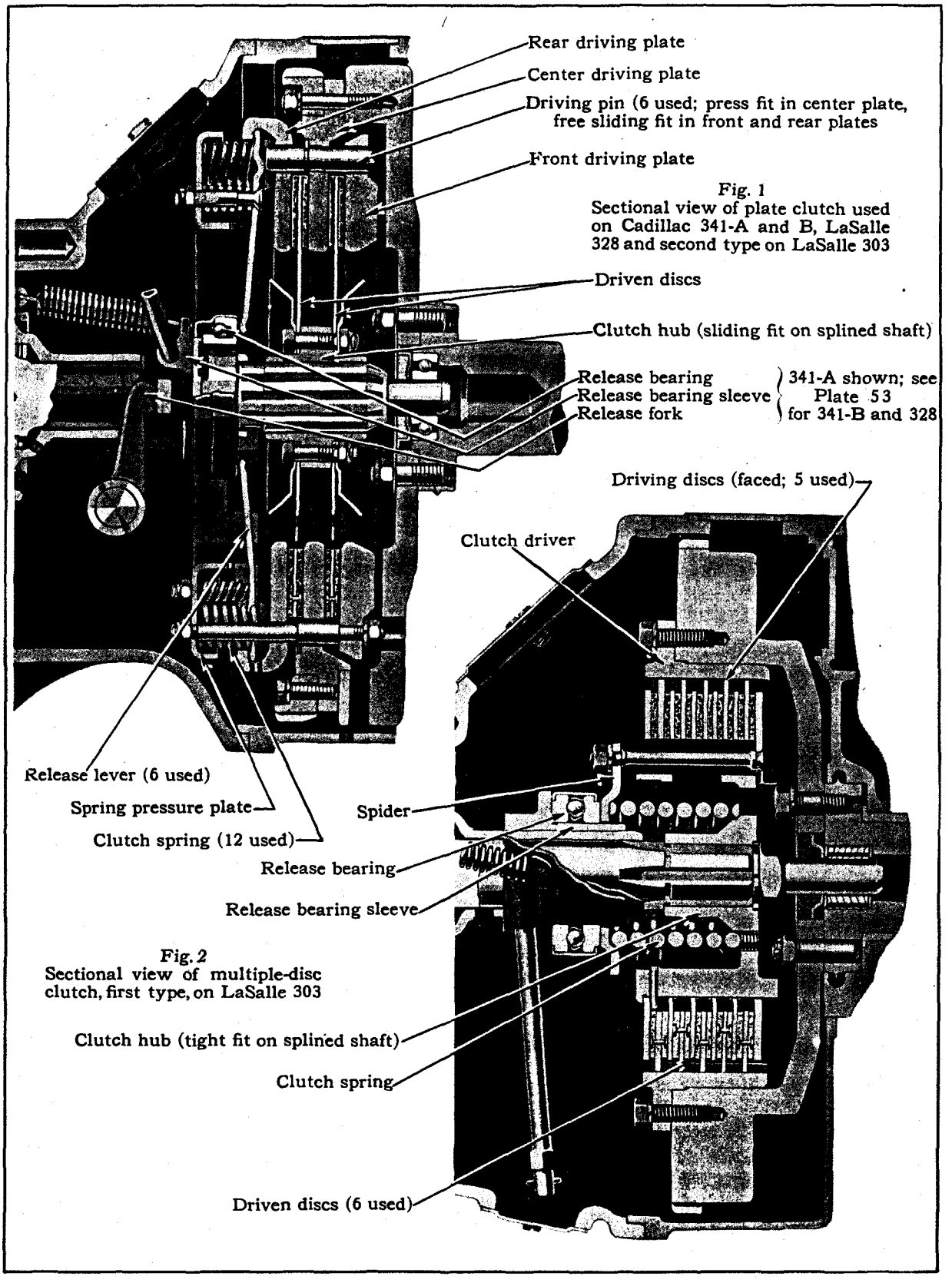

Fig. 1
Sectional view of plate clutch used on Cadillac 341-A and B, LaSalle 328 and second type on LaSalle 303

Fig. 2
Sectional view of multiple-disc clutch, first type, on LaSalle 303

Plate 19. Sectional view of clutch.

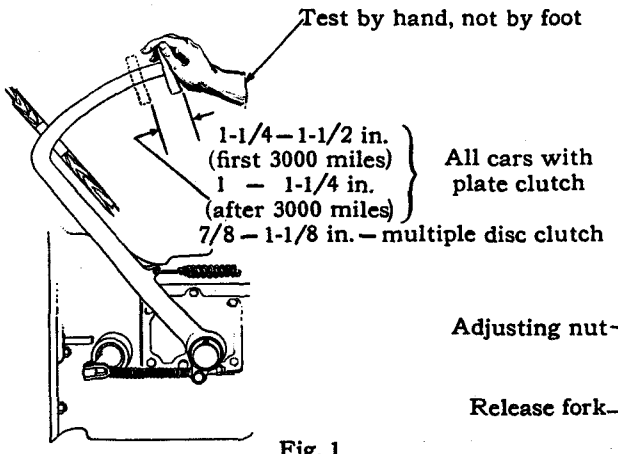

Fig. 1
Measuring free travel or lost motion of clutch pedal before starting to disengage the clutch

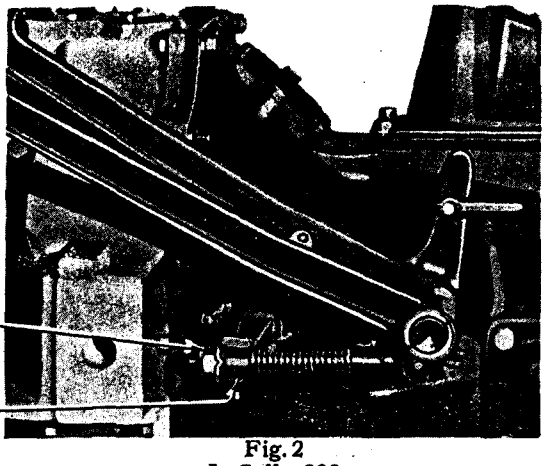

Fig. 2
LaSalle 303

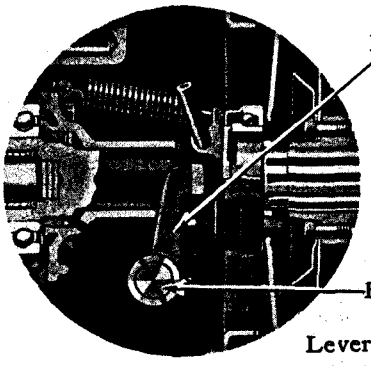

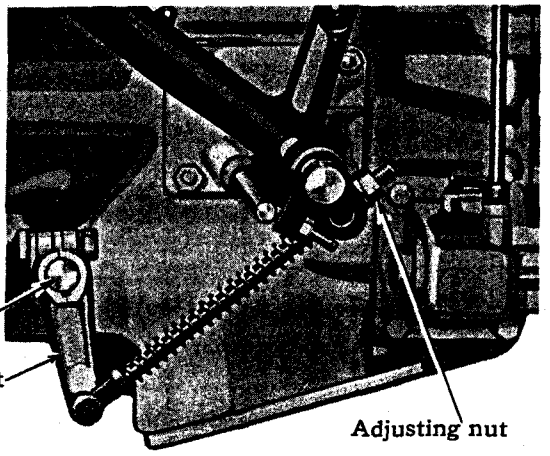

Fig. 3
Cadillac 341-A

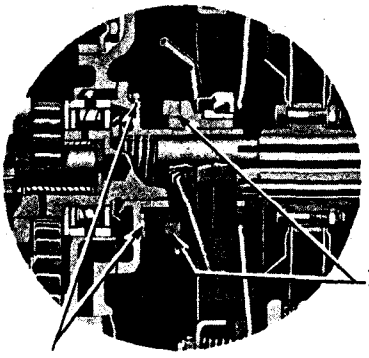

Install thin head cap screws (part number 871838) with special thin lock washers (part number 110730) in place of studs on 341-B cars before transmission unit 3-31617 and on 328 cars before transmission unit 4-12532. Watch for interference between studs and fork by making sure adjusting nut is tight against trunnion

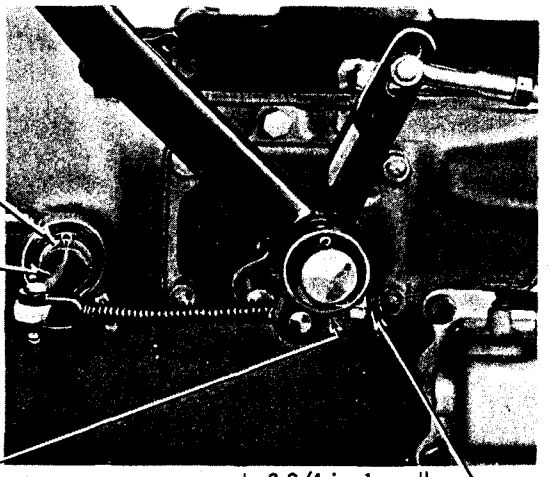

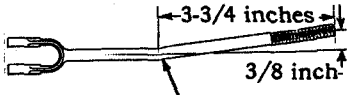

On 341-B and 328 cars the clutch release rod should be bent as shown and installed so that the bent part points up

Fig. 4
Cadillac 341-B and LaSalle 328

Plate 20. Adjustment of clutch pedal rod.

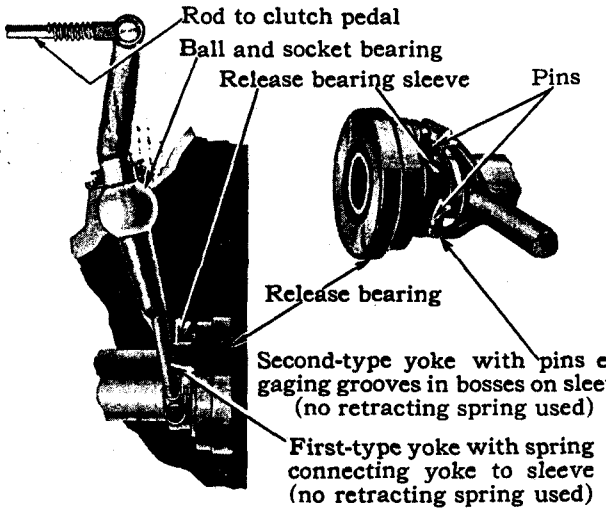

Fig. 1
Clutch release yoke on Cadillac 341-B and LaSalle 328

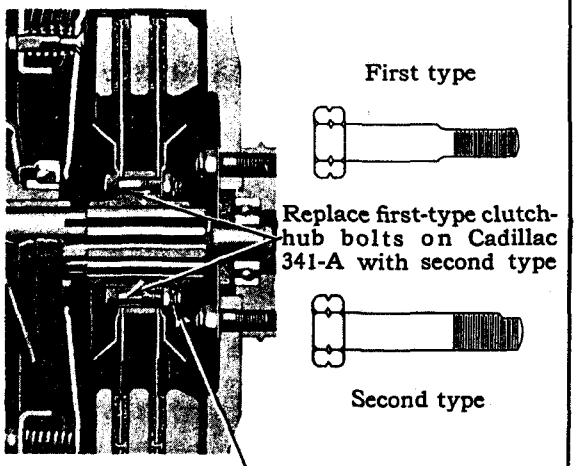

Fig. 2

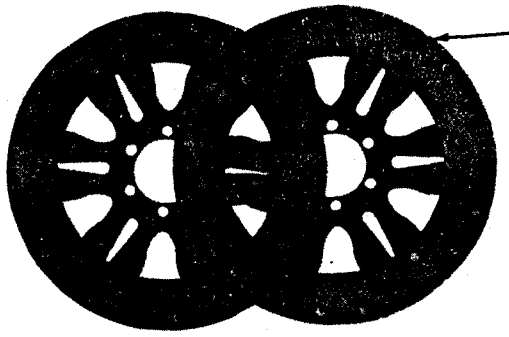

Fig. 3
Clutch driven discs with facing

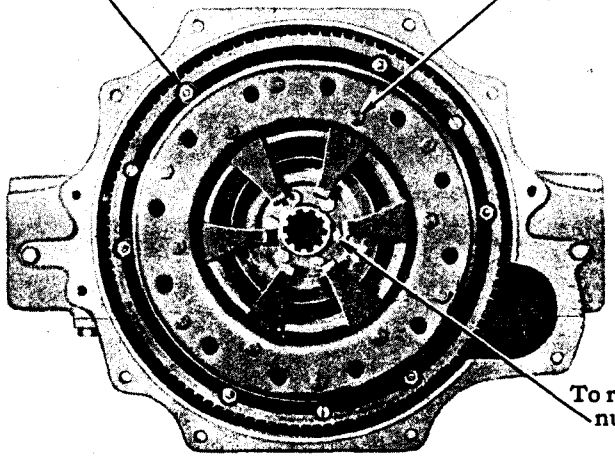

Fig. 4
Rear view of engine showing removal of clutch

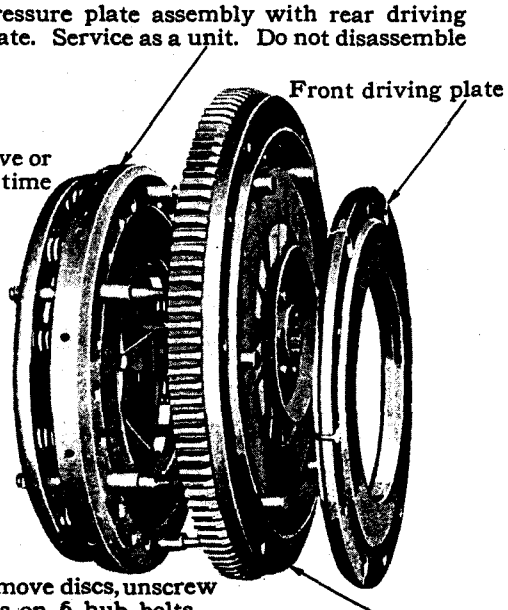

Fig. 5
Clutch disassembled

Plate 21. Removal and disassembly of plate-type clutch.

Cooling System

Subject	Cadillac 341		LaSalle 303-328		Specifications			Remarks
FAN								
Assembly, method of	A	B	303	328				See note 1.
Bearing diameter	A	B	303	328	¾ in.			
Belt, length	A	B	303	328	35 in.			
Belt, tension	A	B	303	328	⅝ in. slack with 15 lbs. pull.			*Plate 22, Fig. 3.*
Belt, width	A	B	303	328	1 in.			
Clearance between fanshaft and bushing	A	B	303	328	New limits, .004—.006 in.			
					Worn limit, not over .010 in			
Diameter	A	B	303	....	20¼ in.			When replacing fan on 303 use 21-in. fan.
	...	...	....	328	21 in.			
Identification marks	A	B	....	328	"C"			Stamped on front face of hub cover. Fan for 328 is 21 in. in diameter. *Plate 22, Fig. 5.*
	...	...	303	....	"L"			
Lubrication	A	B	303	328	At every 1000 miles.			See note 2.
Oil capacity of fan reservoir	A	B	303	328				See Lubrication Table, page 83
Pitch of blades	A	B	....	328	33°			Cadillac 341-A Stamped "C"
	...	...	303	....	25°			Stamped "L"
HOSE CONNECTIONS								
Cylinder to radiator hose, diameter	A	B	303	328	1¼ in.			
Cylinder to radiator hose, length	A	B	....	....	16¾ in.			Before engine unit 3-11595 this hose was 16¼ in. long. When replacing, use 16¾ in. hose.
	...	...	303	....	10¾ in. R. H., 12 1/16 in. L. H.			
	...	...	....	328	14½ in.			
Cylinder block nipple to elbow hose, diameter	A	B	303	328	1¼ in. (either side)			
Cylinder block nipple to elbow hose, length	A	B	303	328	2¼ in. (either side)			
Pump to elbow hose, diameter	A	B	303	328	1⅝ in.			
Pump to elbow hose, length	A	...	303	....	13¾ in.			
	...	B	....	328	16⅝ in.			
Radiator to pump hose, diameter	A	B	303	328	1⅞ in.			
Radiator to pump hose, length	A	B	303	328	12⅛ in.			See note 3.
RADIATOR								
Anti-freeze solution					Qts.	Sp. gr. at 60°F.	% by Vol.	Sp. gr. at 60°F.—Specific gravity at 60° Fahrenheit
Alcohol required for 10°F.	A	B	....	....	7¼	.9668	30	% by Vol.—Per cent by Volume.
	...	...	303	328	6¼	.9668	30	
Alcohol required for 0°F.	A	B	....	....	9	.9567	38	
	...	...	303	328	8	.9567	38	
Alcohol required for – 10°F.	A	B	....	....	10¾	.9485	45	The calculations are based on 180-proof alcohol (10% water). If 188-proof alcohol (6% water) is used, the amount of alcohol required can be reduced by 4% (volume).
	...	...	303	328	9½	.9485	45	
Alcohol required for – 20°F.	A	B	....	....	12¼	.9350	51	
	...	...	303	328	10¾	.9350	51	
Alcohol required for – 30°F.	A	B	....	....	13¾	.9260	57	
	...	...	303	328	12	.9260	57	

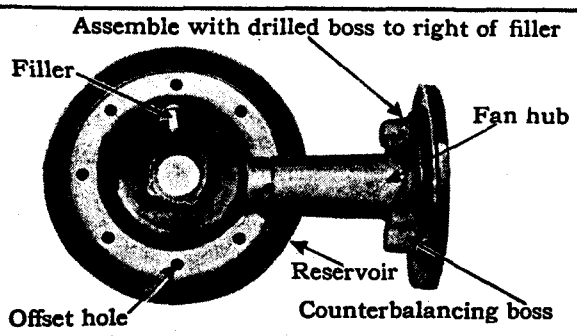

Fig. 1
To preserve balance fan hub and reservoir must be properly assembled

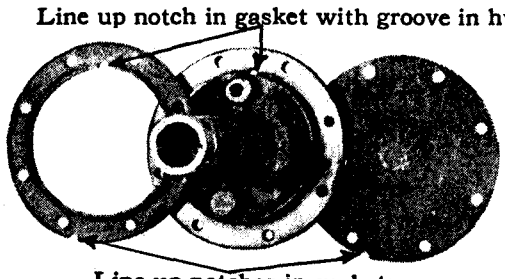

Fig. 2
Correct assembly of fan gaskets

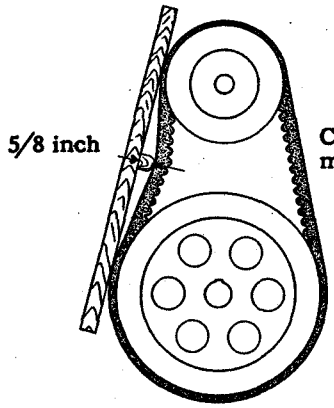

Fig. 3
Correct adjustment of fan belt

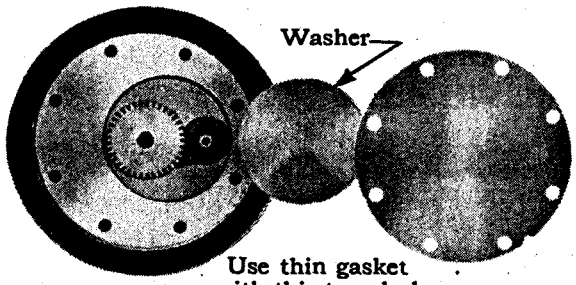

Fig. 4
Fan hub and thrust washer used on Cadillac 341-B and LaSalle 328. Use also for replacement on 341-A and 303

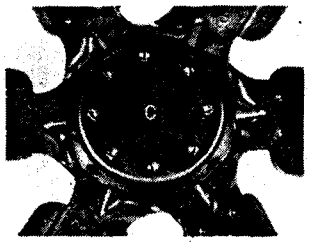

Fig. 5
Fan identification
C—Cadillac
L—LaSalle(303)

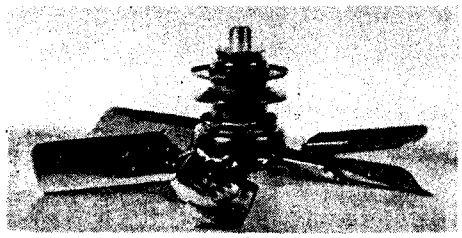

Fig. 6
Always place fan on bench with front down to prevent oil running out. Carry in same position

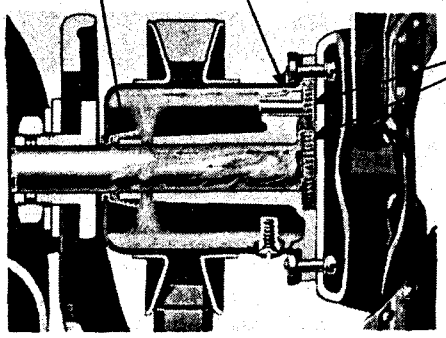

Fig. 7 Circulation of oil in fan.
Centrifugal force holds oil against outer wall of reservoir. Pump gears draw it through small hole and force it to bearing surface

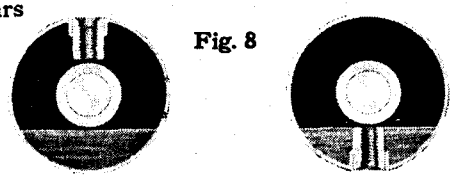

Fig. 8

Filler up for adding oil

Filler down for draining off surplus

Note: If reservoir is air-bound and surplus does not drain off at once, wait a few seconds to let air work in. Fan will throw oil if there is too much in reservoir

Plate 22. Fan Details.

Subject	Cadillac 341		LaSalle 303-328		Specifications	Remarks
Capacity of cooling system...	A	B	....	....	6 gals.	Total capacity of cylinder water jackets, hose connections and radiator. Do not fill radiator full. This will result in overflow when the water heats and expands. Expensive when anti-freeze is used.
	...	...	303	328	5¼ gals.	
Flushing radiator.....	A	B	303	328	.....	See note 4.
Manufacturer's number, location of.....	A	B	303	328	Rear of upper tank—right side	
Spacing of studs.....	A	...	....	....	.....	See note 5.
Thermostat.....	A	B	303	328	.....	See note 6.
Shutters open.....	A	B	303	328	Start to open 155°—165°F Full open—180°F.	
Shutters close.....	A	B	303	328	165°—170°F.	
Shutter rod adjustment.....	A	B	303	328	Adjustable end ⅛ in past operating arms.	See note 7. *Plate 23, Fig. 4.*
WATER PUMP						
Clearance between impeller and pump body.....	A	B	303	328	New limits, .055—.065 in. Worn limit, not over .075 in.	
Clearance between drive sprocket and support.....	A	B	303	328	New limits, .003—.005 in. Worn limit, not over .010 in.	
Clearance between pump shaft and bushings.....	A	B	303	328	New limits, .001—.003 in. Worn limit, not over .006 in.	

1. Fan Assembly

The fan must be assembled correctly to prevent unbalance.

Inspection of the fan will show that the hub has two bosses (*Plate 22 Fig. 1*), one of which is drilled to receive the smaller pump gear. The drilled boss should take a position just to the right of the filler plug at which point the bolt holes will line up correctly. The other boss is on the opposite side of the hub and is of sufficient weight to counterbalance the small gear and drilled boss together with the filler plug in the oil reservoir.

In order to maintain the correct position of the balancing parts when assembling the fan, one of the eight bolt holes in the hub, the reservoir, the gaskets and the blades, is purposely off-set $\frac{1}{16}$ inch. (*Plate 22 Fig. 1*). When assembling these parts the holes should line up correctly and under no consideration should the off-set hole be filed or elongated to enable the blades to be installed in any other position.

A further precaution in assembling the fan should be observed in the placing of the gasket. The ring type gasket has a notch on its inner circumference which must coincide with the small oil intake hole in the hub. The notches on the outer circumference of the ring type gasket and the solid gasket should also be in line. (*Plate 22 Fig. 2*)

On fans for 341-B and 328 cars, the hub is counterbored deeper to permit the installation of a metal plate between the oil pump gears and the gasket.

With these fans a thinner gasket should be used as it is easier to keep oil tight. On fans that do not have this metal plate the thicker gasket must be used so that it will fill in the space in front of the gears.

2. Lubrication of Fan

The only way to make sure that the fan has the proper amount of oil is to add more than enough and then turn the filler hole down and allow the surplus to drain off. (*Plate 22 Fig. 8*). If the surplus oil does not drain off at once, it is because the reservoir is "air-bound," and the filler hole should be left inverted for several minutes until the oil drains out. Oil should be added to the fan every 1000 miles.

3. Aligning Water Pump Hose with Radiator Connection

The holes for the screws by which the pump is attached to the sprocket support are purposely made $\frac{5}{32}$ inch larger in diameter than the screws themselves. The reason for this is to permit the pump inlet connection to be lined up with the water outlet on the radiator, so that the hose will be as nearly in a straight line as possible.

In order to make use of this feature the pump screws should be loosened whenever the generator chain is adjusted. Then, as the sprocket support is moved, the pump will be free to align itself.

Because of the fact that the holes in the pump flange are so much larger than the screws, flat washers as well as lock washers are used under the heads of the screws. It is very important that these washers always be in place. If they are omitted, the screws will bottom against the chain housing, instead of clamping the pump to the face of the sprocket support. This would tend to pry the support away from the chain housing and cause an oil leak.

If a water pump is removed for any reason the flat washers must be reinstalled.

4. Flushing Cooling System

In order to keep the Cooling System free from an excessive accumulation of sediment and scale, it should be flushed by the reverse-flow method every 4000 miles.

To flush the system, the hose connection at the bottom of the radiator should be disconnected and the flushing hose attached to the radiator outlet. The flushing water will then be forced up through the radiator, back through the cylinder jackets and pump and out through the disconnected hose. The flushing operation should be continued until the water from the pump is reasonably clear.

The pressure of the water used in flushing the cooling system should not exceed 20 to 25 pounds as a higher pressure is liable to damage the radiator.

5. Spacing of Radiator Studs

On 341-A Cadillac cars previous to engine unit 300600 and after engine unit 301200 (these numbers are approximate), the radiator studs are 9 inches apart on centers. On cars between these two unit numbers and also on some later 152-inch chassis, the radiator studs are 15 inches apart.

Whenever a radiator core having the studs 15 inches apart requires replacement, it will be necessary to remove the anchorage from the old core and use it with the new core to permit installing the new radiator on the chassis. To replace the anchorage, it is simply necessary to remove the two bolts which hold the anchorage on each side.

6. Operation of Thermostat

The thermostat plunger should start its stroke at a temperature of not less than 150° and should have a full stroke of $\frac{11}{32}$ inch at a temperature of not over 175°. The test may be made by placing the thermostat in water of the proper temperature.

7. Adjustment of Shutter Rod

The yoke end of the shutter operating rod should be adjusted to bring the center of the hole in the yoke about $\frac{1}{8}$ inch beyond the center of the holes in the operating arms when the rod is detached. *Plate 23, Fig. 4.*

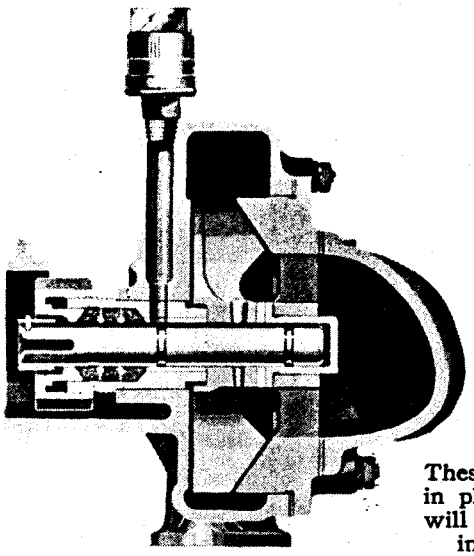

Fig. 1
Sectional view of water pump

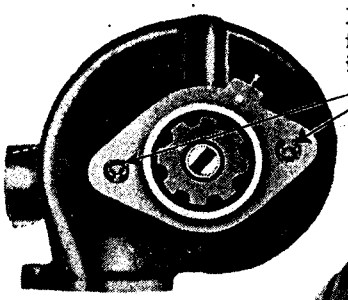

Fig. 2
Enlarged holes in water pump flange to permit lining up inlet with radiator connection

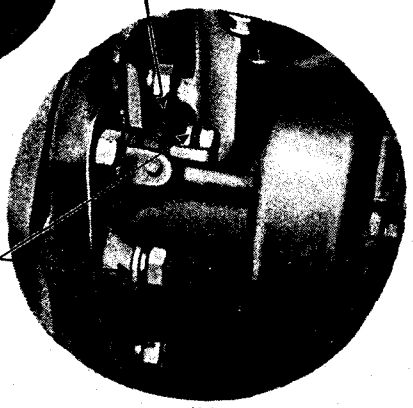

These flat washers must be in place; otherwise screws will bottom on chain housing and cause oil leak

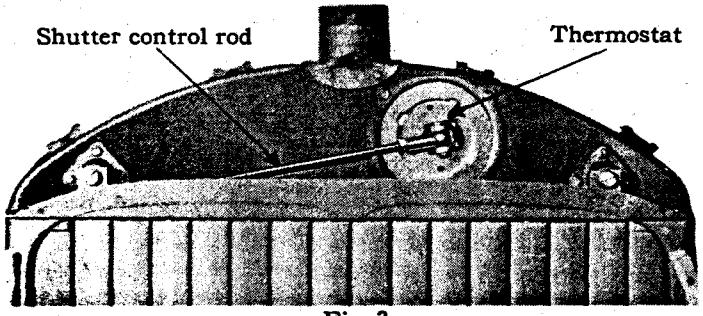

Fig. 3
Front view of radiator showing thermostat and shutter control

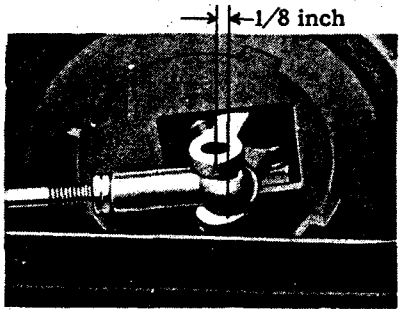

Fig. 4
Adjustment of shutter control rod

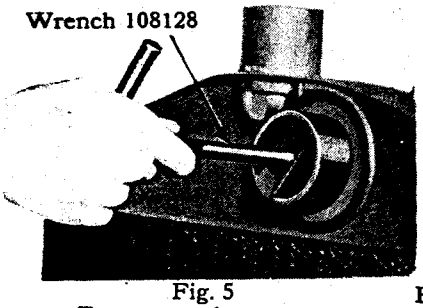

Fig. 5
To remove thermostat unscrew retaining nut

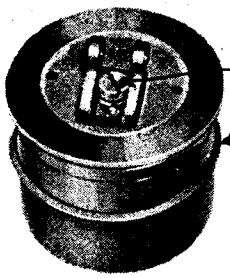

Fig. 6 Thermostat assembly. To disassemble remove trunnion screw

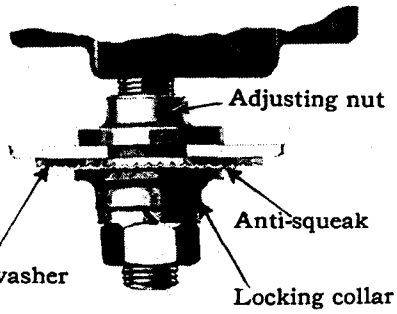

Fig. 9
Radiator support

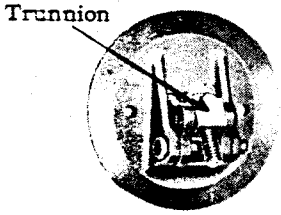

Fig. 7
Thermostat cover assembly

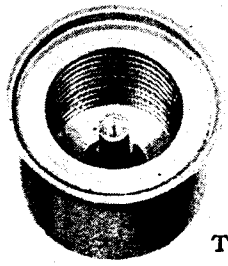

Fig. 8
Thermostat

Plate 23. Cooling System Details.

Electrical System

Subject	Cadillac 341		LaSalle 303-328		Specifications	Remarks
Connections on gasoline tank float unit	A	...	....	....	.....	See note 1.
Stentor phones	A	B	303	328	.....	See note 2.
STORAGE BATTERY						
Manufacturer's number	A	B	....	....	Exide, 3-LXRV-15-2-G	
	...	...	303	....	Exide, 3-XC-15-1-G	
	...	...	....	328	Exide, 3-MXV-15-1	
Capacity, rated	A	B	....	....	130 ampere hours	
	...	...	303	328	100 ampere hours	
Capacity, lighting	A	B	....	....	5 amperes for 26 hours	
	...	...	303	328	5 amperes for 20 hours	
Capacity, starting	A	B	....	....	137 amperes for 20 minutes	
	...	...	303	328	114 amperes for 20 minutes	
Charging rate on bench, start	A	B	....	....	10 amperes	
	...	...	303	328	8 amperes	
Charging rate on bench, finish	A	B	303	328	4 amperes	
Corrosion on terminals	A	B	303	328	.....	See Note 3.
Number of plates	A	B	303	328	15 plates	
Specific gravity of battery solution	A	B	303	328	.....	See Note 4.
Terminal grounded	A	B	303	328	Positive	
Voltage, rated	A	B	303	328	6 volts	
Water, add to storage battery	A	B	303	328	.....	See Note 5.
CIRCUIT BREAKER						
Manufacturer's number	A	B	303	328	Delco-Remy 5759	
Lockout circuit breaker opens	A	B	303	328	25-30 amperes	
Vibrating circuit breaker starts	A	B	303	328	25-30 amperes	See Note 6.
CUT-OUT RELAY						
Manufacturer's number	A	B	303	328	Delco-Remy 266N	
Air gap between contacts	A	B	303	328	.015-.025 in.	
Air gap between cut-out armature and core	A	B	303	328	.014-.021 in.	This measurement is made with contacts together.
Cut-out closes	A	B	303	328	At 7.5 volts, approximately	Corresponding armature speed, 420 R P. M.; car speed, 8-10 M. P. H.
Cut-out opens	A	B	303	328	At discharge of 0 to 2.5 amperes	
GENERATOR						
Manufacturer's number	A	B	303	328	Delco-Remy 384	
ARMATURE						
Commutator, out of round	A	B	303	328	Not over .002 in.	
End play in ball bearing	A	B	303	328	Not over .015 in.	
Radial (side) play in ball bearing	A	B	303	328	Not over .004 in.	
BRUSHES						
Tension of brush arm springs	A	B	303	328	16-20 oz.	Test with spring scale, Tool number 100242.
Charging rate on bench—						
700 R. P. M. (cold)	A	B	303	328	7 amperes at 7.2-7.4 volts	
1400 R. P. M. (cold)	A	B	303	328	18 amperes at 8.2-8.62 volts	
1600 R. P. M. (hot)	A	B	303	328	10-12 amperes at 7.3-7.7 volts	
Charging rate after thermostat opens	A	B	303	328	5-6 amperes, approximately	

Fig. 1
Sectional view of generator

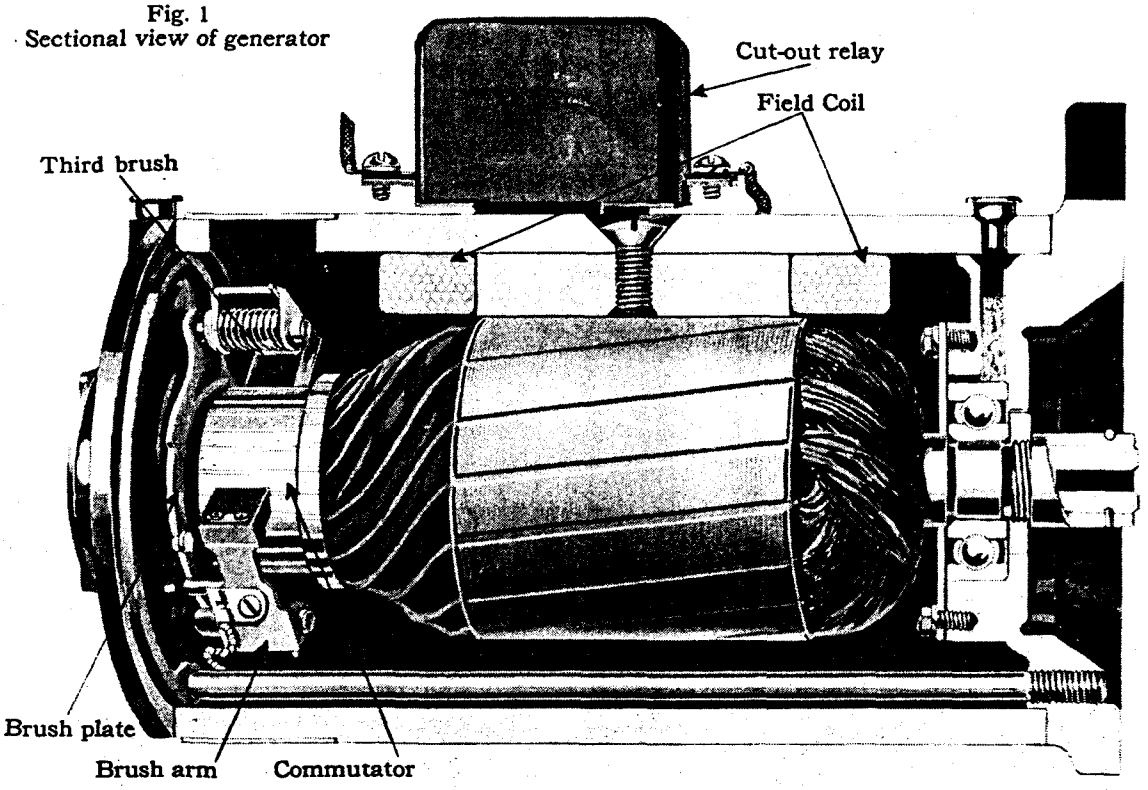

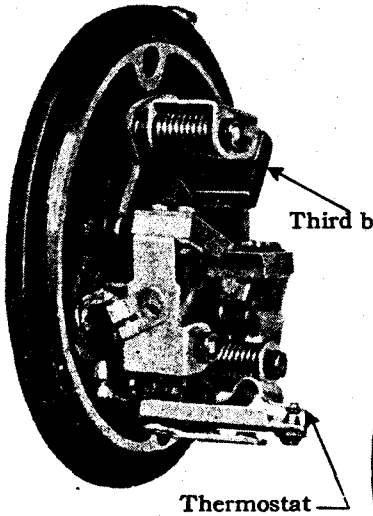

Fig. 3
End-frame of first-type generator showing split-pole type of thermostat

Fig. 2
Adjusting charging rate. Pry against brush arm, not brush. On later-type generator, pry against slot in brush plate

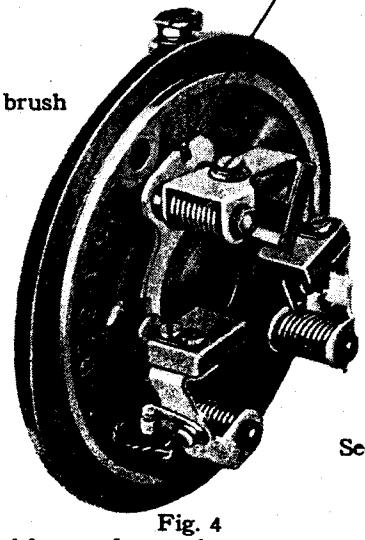

Fig. 4
End-frame of second-type generator. Thermostat on housing instead of end-frame

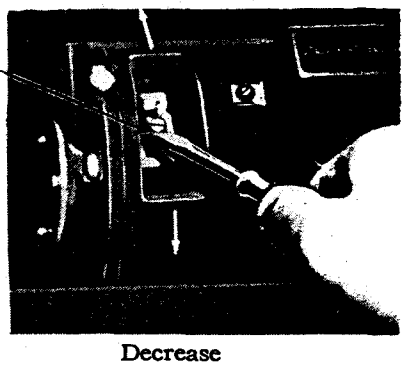

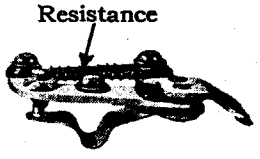

Fig. 5
Second-type thermostat with resistance

Plate 24. Generator Details.

Subject	Cadillac 341		LaSalle 303-328		Specifications	Remarks
Charging rate on car	A	B	303	328	16-18 amperes, maximum (cold)	
Current regulation	A	B	303	328	Third brush (thermostat control)	*Plate 24, Figs. 3, 4, 5*
Running engine with storage battery disconnected	A	B	303	328		See Note 7
Thermostat control	...	...	303[1]	....	Split field	Before engine unit 2-10750.
	A	B	303[2]	328	Resistance in series with field coils	Beginning with engine unit 2-10750 on 303 cars. See Note 8.
Thermostat opens	A	B	303	328	175° Fahrenheit	
Voltage, rated	A	B	303	328	6 volts	
HORN						
Manufacturer's number	...	...	303[1]	....	Delco-Remy K25 Type C991	
	A	B	303[2]	....	Delco-Remy K19 Type 1050	
	...	...	....	328	Delco-Remy K19 Type 1053	
ADJUSTMENTS						
Air gap between armature and field core	...	...	303[1]	....	.025 in. clearance	Adjust by loosening retaining nut and turning aluminum disc to give proper clearance. *Plate 25, Fig. 1*
	A	B	303[2]	328	.025 in. clearance	Adjust by loosening three stud nuts and raising or lowering field coil to give proper clearance. *Plate 25, Fig. 2.*
Position of vibrating spring	...	...	303[1]	....	Horizontal	
	A	B	303[2]	328	Slight angle below horizontal	*Plate 25, Figs. 1, 2.*
Contact point adjustment	A	B	303	328	Until proper tone is secured	
Current consumption	A	B	303	328	7-8 amperes	
IGNITION						
COIL						
Manufacturer's number	A	B	303	328	Delco-Remy 2195	
Current consumption	A	B	303	328	2 amperes, engine stopped 2½ amperes, engine running	
DISTRIBUTOR						
Manufacturer's number	A	...	303	....	Delco-Remy 4023	
	...	B	....	328	Delco-Remy 4041	
Angle between contact arms	A	B	303	328	135°	See Note 9.
Contact point gap	A	B	303	328	.0225-.0270 in.	
Firing order	A	B	303	328	1L, 4R, 4L, 2L, 3R, 3L, 2R, 1R.	
Side play in ball bearing	A	B	303	328	Worn limit, not over .003 in.	
Spark advance, automatic	A	...	303	....	32°	
	...	B	....	328	21°	
Spark advance, manual	A	B	303	328	38°	
Tension of contact arm springs	A	B	303	328	16-20 oz.	Measure with spring scale, Tool 100242. *Plate 27, Fig. 1.*
Timing, low-compression cylinder heads	A	B	303	328	⅛ in. ahead of center, manual control advanced	See Note 10.
Timing, high compression heads	A	...	303	....	½ in. ahead of center, manual control advanced	
	...	B	....	328	⅛ in. ahead of center, manual control advaned	
SPARK PLUGS						
Coated with Duco	A	B	303	328		Clean plugs with alcohol or Duco thinner
Gap	A	B	303	328	.025-.028 in.	
Type	A	B	303	328	A. C. Type Y	

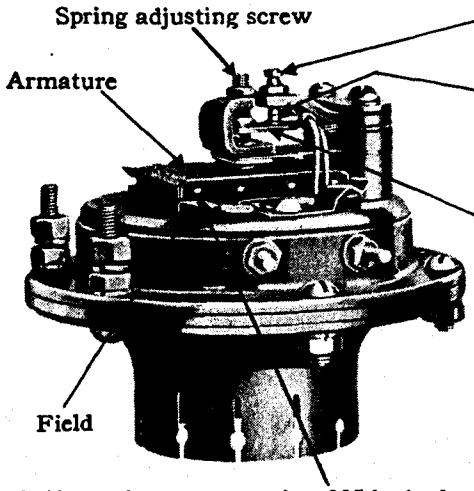

Fig. 1
Delco-Remy horn.
Type K-25-C991 used on LaSalle 303, first type

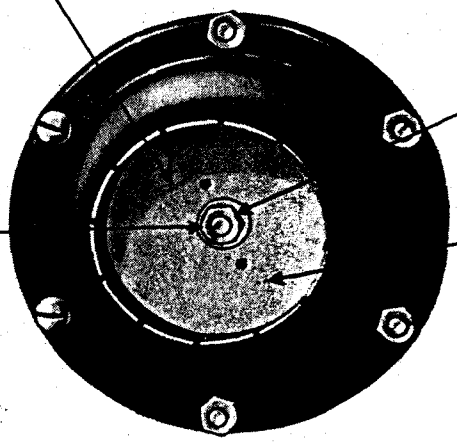

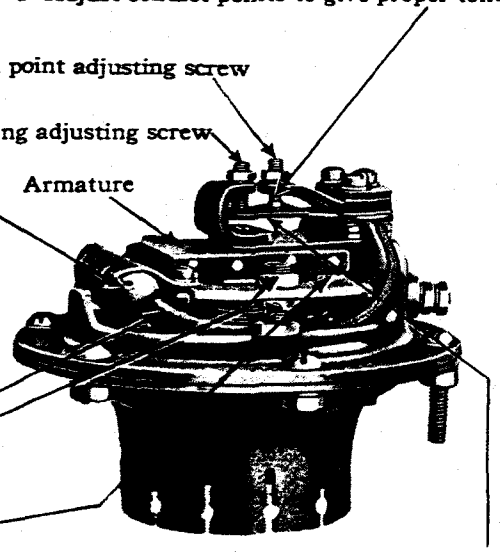

Fig. 2
Delco-Remy horn.
Type K-19-1050 used on Cadillac 341-A and B and LaSalle 303 second type.
Type K-19-1053 used on LaSalle 328.
(The same adjustments are applicable to both types)

Plate 25. Horn adjustments.

Subject	Cadillac 341		LaSalle 303-328		Specificatons	Remarks
STARTING MOTOR						
Manufacturer's number	A	B	....	....	Delco-Remy 382	
	...	...	303	328	Delco-Remy 725-C.	
ARMATURE						
Clearance between armature shaft and bearings	A	B	303	328	Worn limit, not over .010 in.	
Clutch spring, free length	A[1]	...	303[1]	....	2 in., approximately	Before engine number 312924 on 341-A cars and 219923 on 303 cars.
	A[2]	B	303[2]	328	2¼ in., approximately	Beginning with engine number 312924 on 341-A cars and 219923 on 303 cars.
Clutch spring, compression	A[1]	...	303[1]	....	34—38 lbs. at 1 in.	Before engine number 312924 on 341-A. cars and 219923 on 303 cars.
	A[2]	B	303[2]	328	46—52 lbs. at 1 in	Beginning with engine number 312924 on 341-A cars and 219923 on 303 cars.
Commutator, out of round	A	B	303	328	Worn limit, not over .002 in.	
End play	A	B	303	328	Worn limit, not over .025 in.	
BRUSHES						
Number of brushes	A	B	....	....	6	
	...	...	303	328	4	
Tension of brush arm springs	A	B	....	....	36-40 oz.	Test with spring scale, Tool 100242.
	...	...	303	328	24-28 oz.	
Gear ratio	A	B	303	328	12 to 1	Ratio between starter gear and fly-wheel gear.
Number of poles	A	B	....	....	6	
	...	...	303	328	4	

1. Arrangement of Units in Circuit Diagrams.

The positions of the units and wires in the circuit diagrams do not always correspond to their location on the car.

For instance, the float unit of the gasoline gauge is shown in the center of the 341-A Cadillac diagram (Plate 32). When looking at the float unit from the rear of the car the green wire is connected to the right terminal, which is terminal No. 2, and the black wire to the left terminal, which is terminal No. 1.

On the diagram, however, terminal No. 1 is on the right and terminal No. 2 on the left, which makes it appear that the unit is upside down. This was done so that the wires to the float unit would not have to be crossed in the diagram. As the terminals on the car are marked with the proper numbers no difficulty should arise in properly connecting the gasoline gauge.

2. Stentor Phone Replacement.

The stentor phones in the Imperial and the Fleetwood Town Cars are matched and installed in pairs. Therefore, if the original transmitter and receiver are not kept together the operation of the phone is likely to prove unsatisfactory.

If the signals are weak when it is known that the set is properly matched, the connections should be carefully checked for looseness and the wiring tested out for possible shorts caused by staples and tacks. If, however, replacement is found to be necessary both the transmitter and receiver should be replaced.

3. Corrosion on Terminals

See that the terminals are clean and free from corrosion. The terminals and battery posts should be wiped with a cloth saturated with household ammonia or a solution of water and bicarbonate of soda (cooking soda). These solutions will neutralize any acid that may be present on the parts to be cleaned. Therefore, do not allow any of the solution to get into the cells of the battery.

After the parts are cleaned they should be given a heavy coat of vaseline or heavy grease.

4. Specific Gravity of Battery Solution

Test the specific gravity of the battery solution with a hydrometer.

The specific gravity of a fully charged battery is 1.270 to 1.290 at 60° F. A fully discharged battery has a specific gravity of 1.150 to 1.170 and should be removed from the car for charging.

If the gravity of the battery solution is below 1.250 investigate, if possible, to determine whether or not there has been a recent temporary abnormal demand for current, such as excessive use of the lights or starter. If the low gravity is the result of a temporary abnormal demand, it is possible that the charging rate will be sufficient as it is to bring up the gravity. If the gravity is below 1.250 and there is no evidence of a temporary excessive demand for current, the charging rate should be observed and if low the necessary steps should be taken to increase it.

In any case if the gravity is below 1.225 the battery should be removed and charged.

If any battery solution has been spilled or leaked from the cell it should be replaced with a freshly mixed solution and the battery given an over-charge by charging it from an outside source.

CAUTION: In mixing the acid solution be sure to pour the acid slowly into the water. *Do not pour the water into the chemically pure acid.*

5. Adding Water to Storage Battery

In winter it is sufficient to inspect the level of the battery solution every 1000 miles when the car is lubricated. In summer, however, the battery solution should be inspected every 500 miles or at least every two weeks. Enough water should be added to keep the level of the solution above the tops of the plates and even with the bottom of the filling tubes.

Water for filling the battery must be pure. Distilled water, melted artificial ice or fresh rain water are suitable for this purpose. Do not use water that has come in contact with any metal.

6. Adjustment of Circuit Breaker

The circuit breaker is of the lock-out and vibrating type, the same as on previous cars. The lock-out side protects the horn, inspection lamp, dome lamp, quarter lamps, stop lamp, step lamps and cigar lighter. In case of a ground in any of these circuits, the breaker opens and remains open until the ground is removed.

The remaining lamps including the headlamps are protected by the vibrating circuit breaker. In case of a ground in any of the circuits protected by the vibrating circuit breaker, the breaker will start to vibrate and will continue until the ground is removed.

When 32 candle power bulbs are used in the headlamps the initial rush of the current when the lamps are first turned on sometimes causes the circuit breaker to vibrate a few times. This is only a temporary overload and should not necessitate any adjustments on the circuit breaker.

7. Running Engine with Storage Battery Disconnected

Serious damage will be done to the generator if the engine is run with the battery disconnected unless the generator terminal is grounded. This can be done by using a short wire attached at one end to the front terminal of the cut-out relay and at the other end fastened under one of the cut-out hold-down screws.

8. Generator Thermostat Control

Before engine unit 2-10750 on 303 cars, the generator is of the split-field type, thermostatically controlled. One of the field coils is connected between the third brush and one of the main brushes in the usual manner. The other field coil is connected between the two main brushes and the thermostat is in series with this field. The function of the thermostat is to disconnect this field from the ground as soon as the generator reaches the temperature of 175°F.

Before the thermostat operates, both fields are in use and the out-put of the generator is correspondingly higher. When, as a result of the combined heat of the generator and the engine, the temperature reaches the predetermined point, the thermostat cuts out the field to which it is connected and the generator out-put is reduced.

Beginning with engine unit 2-10750 on 303 cars, both field coils are in series with the thermostat which in turn is in parallel with a resistance. When the thermostat operates, the entire field current is shunted through this resistance with a corresponding reduction of current out-put.

9. Contact Point Adjustment

There are two sets of contact points, one for the odd-numbered cylinders (1-3-5-7), the others for the even-numbered cylinders (2-4-6-8). The contact arm for the odd-numbered cylinders is mounted on a stationary plate and the ignition for these cylinders is timed by adjusting the cam. The contact arm for the even-numbered cylinders is at an angle of 135° from the other arm and is mounted on a plate which is adjustable for timing these cylinders. The complete timing operation should include both adjustments.

10. Timing Marks

A few early 303 cars have the IG/A mark stamped $1\frac{1}{16}$ inch ahead of dead center instead of $\frac{7}{8}$ inch. On these cars the IG/A marks should be disregarded and the timing should be set $\frac{7}{8}$ inch ahead of the dead-center marks.

Fig. 1
Top view with head and rotor removed

Contact point gap. Adjust to .025 inch for ordinary work; not less than .020 inch for high speeds

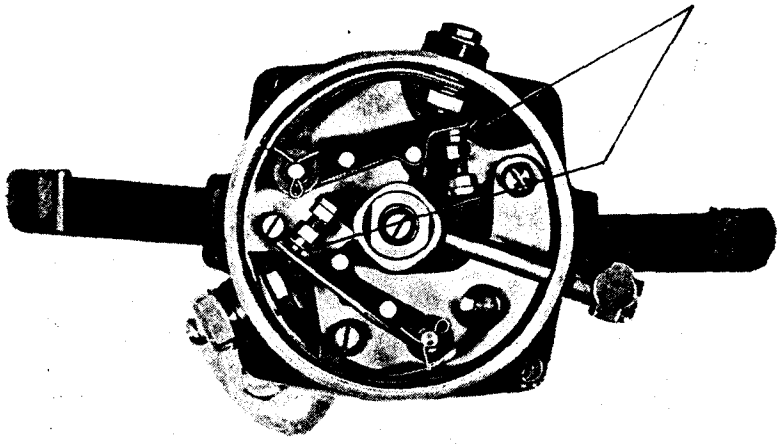

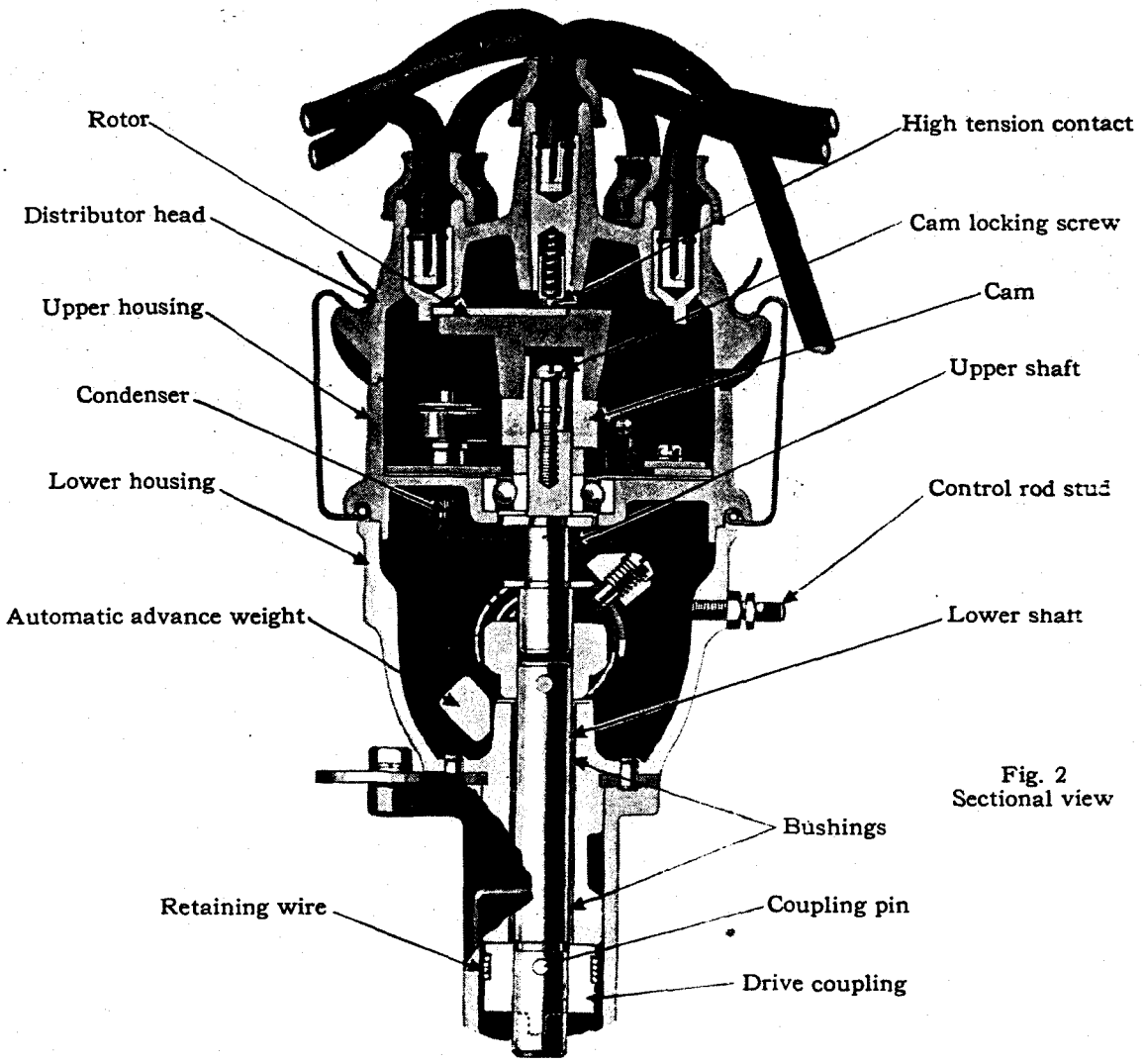

Fig. 2
Sectional view

Plate 26: Sectional and Top Views of Distributor.

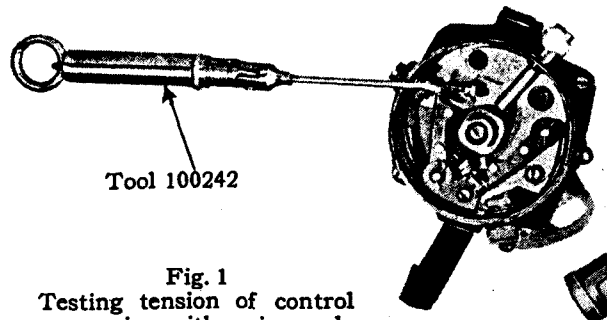

Fig. 1
Testing tension of control arm spring with spring scale

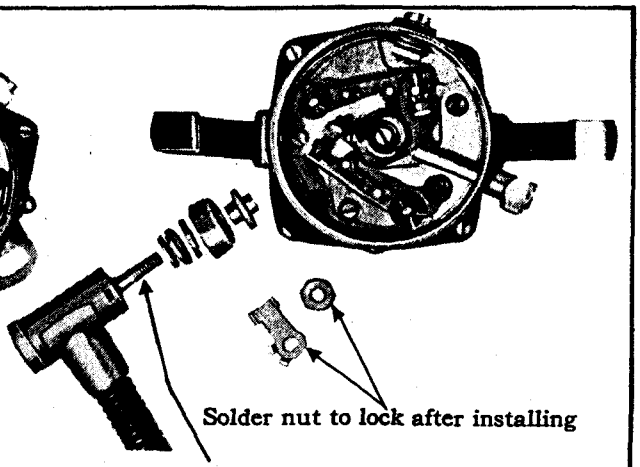

Fig. 2
Showing attachment of electrolock to distributor on Cadillac 341-A and LaSalle 303

Fig. 3

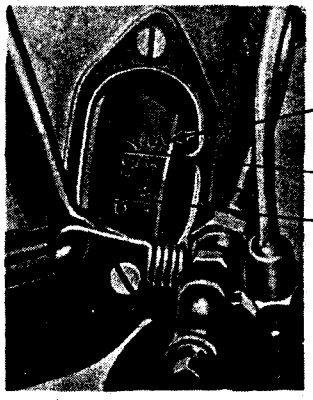

Note: With high-compression cylinder heads on Cadillac 341-A and LaSalle 303, time ignition 1/2-inch ahead of center

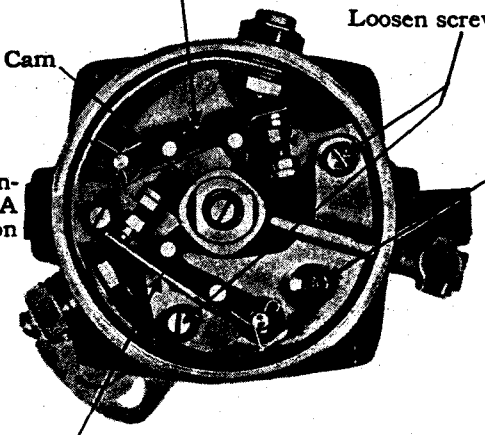

Fig. 4

Note:
Time ignition with hand control lever fully advanced

Fig. 5

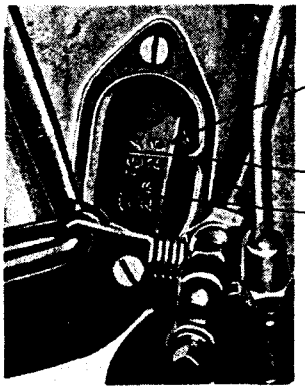

Fig. 6



Plate 27. Ignition Timing.

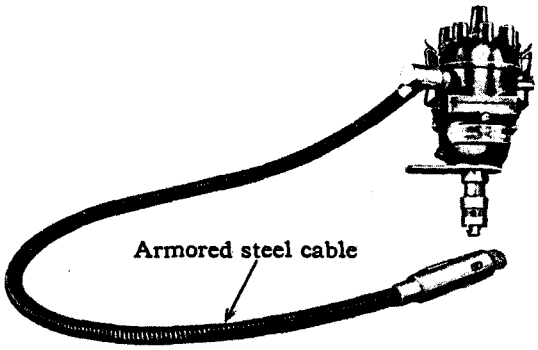

Fig. 1
Electrolock used on Cadillac 341-A and LaSalle 303
For service on distributor, remove Electrolock with distributor or use fixture shown in Plate 27, Fig. 6

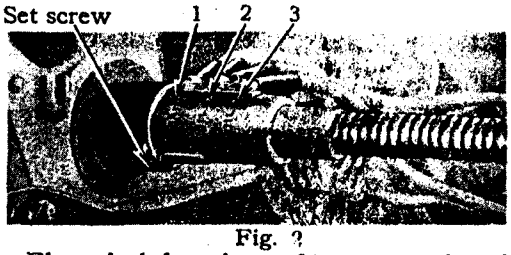

Fig. 2
Electrolock from front of instrument board.
To remove, unlock and take out set screw

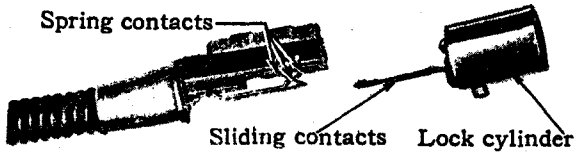

Fig. 3
Electrolock switch with casing and cylinder removed

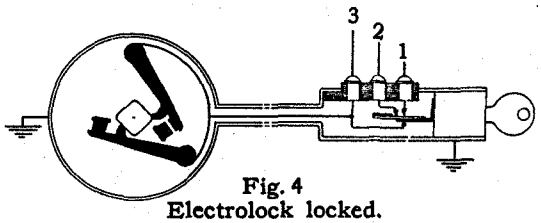

Fig. 4
Electrolock locked.
No current flowing to coil.
Coil and distributor grounded

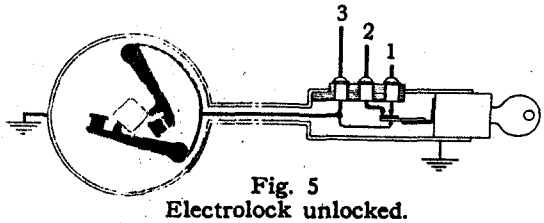

Fig. 5
Electrolock unlocked.
Terminals 1 and 2 connected by contact on slide. Heavy line indicates flow of current

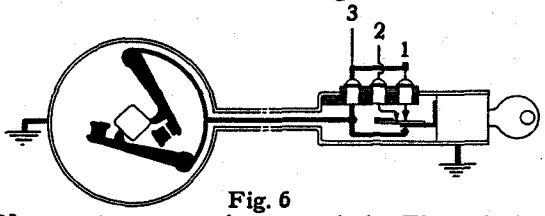

Fig. 6
Never attempt to wire around the Electrolock
A "jumper" between terminals 1 and 3 will cause a short, damaging both switch and distributor

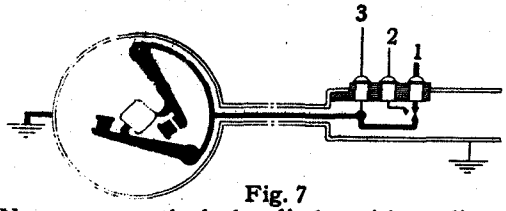

Fig. 7
Never remove the lock cylinder without disconecting the feed wire. No. 1 contact will touch the lower contact and short through the distributor

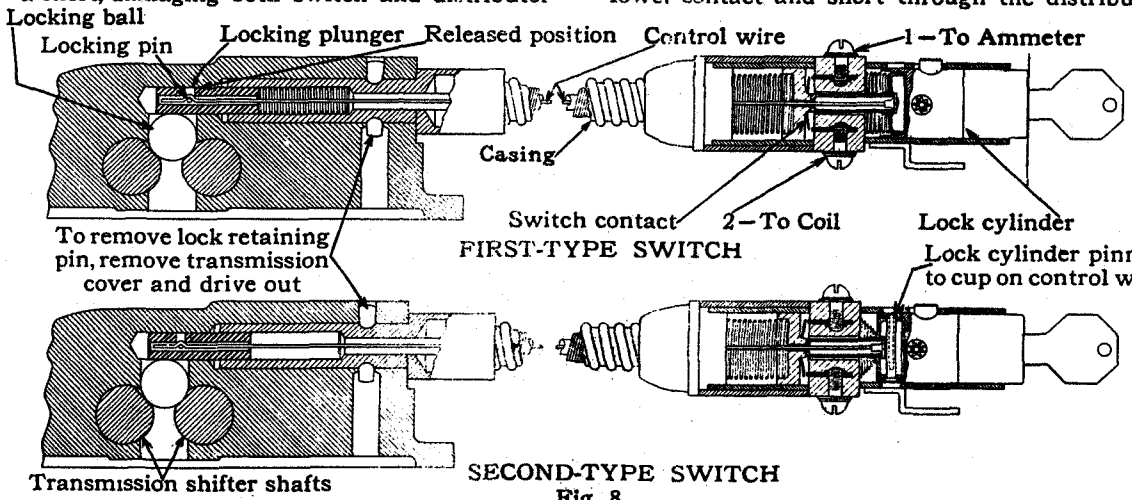

Fig. 8
Transmission lock and ignition switch on Cadillac 341-B and LaSalle 328

Plate 28. Electrolock and dual ignition and transmission lock.

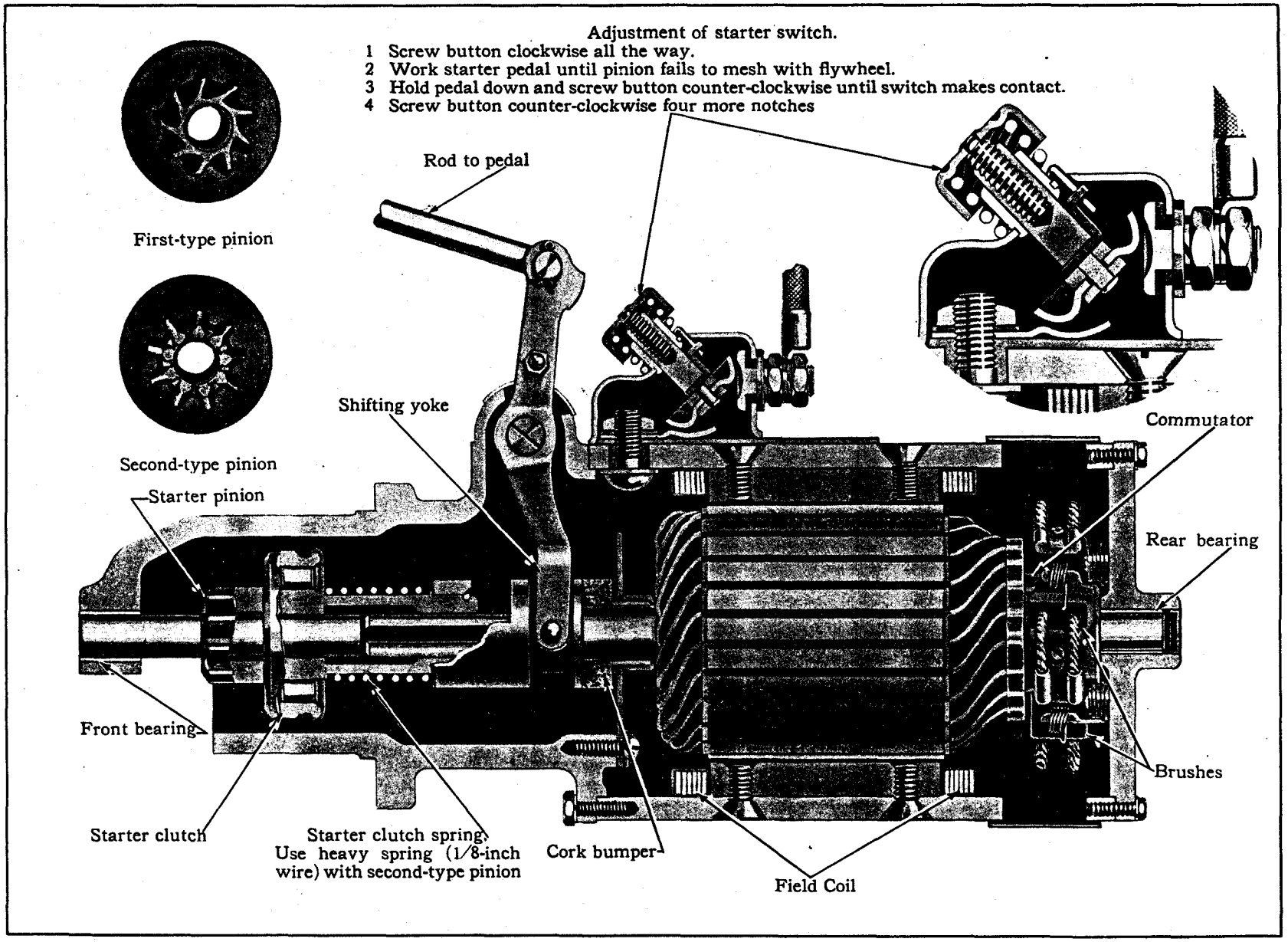

Plate 29. Starting motor details.

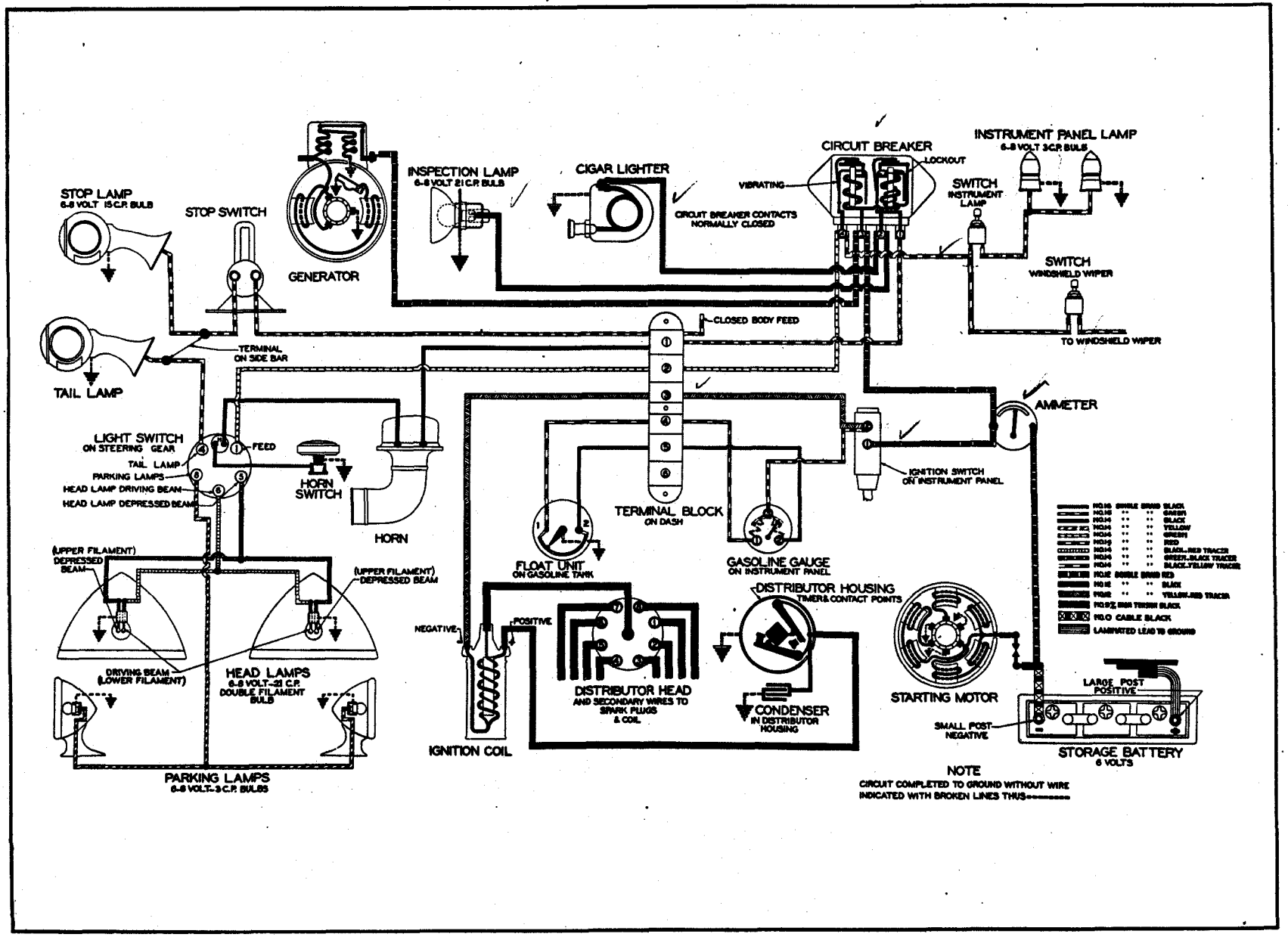

Plate 30. Circuit diagram, Cadillac 341-B.

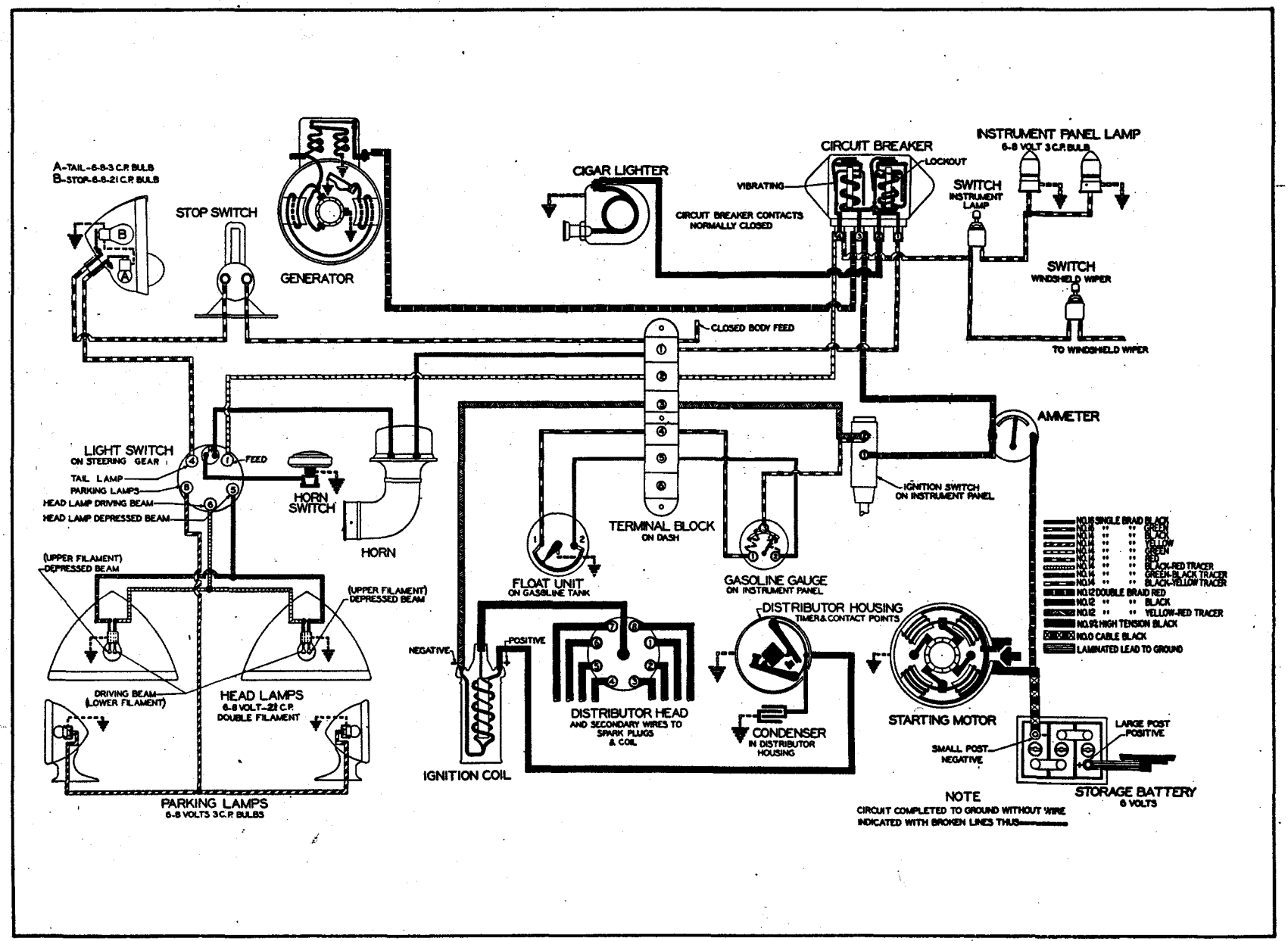

Plate 31. Circuit diagram, La Salle 328.

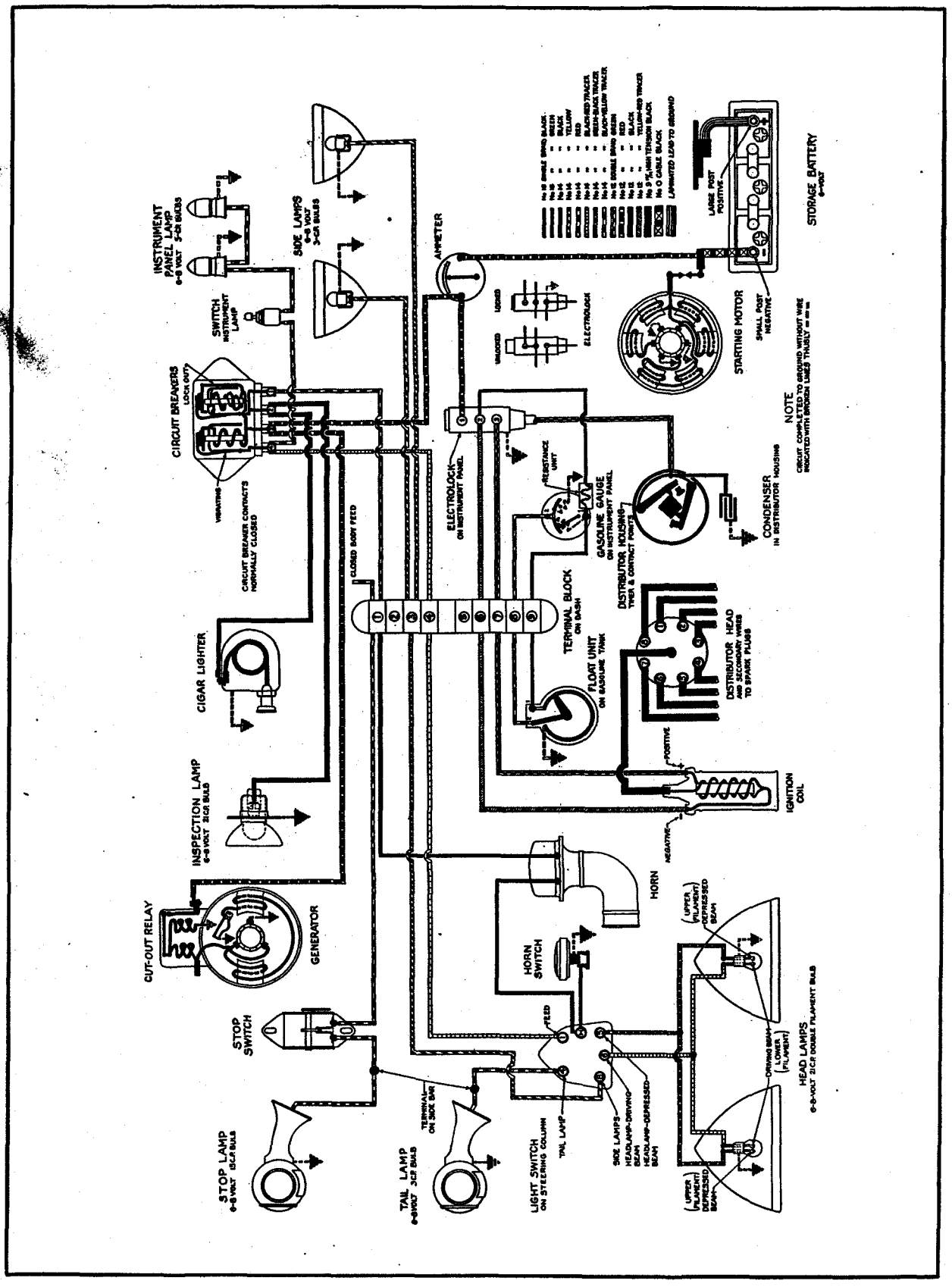

Plate 32. Circuit diagram, Cadillac 341-A.

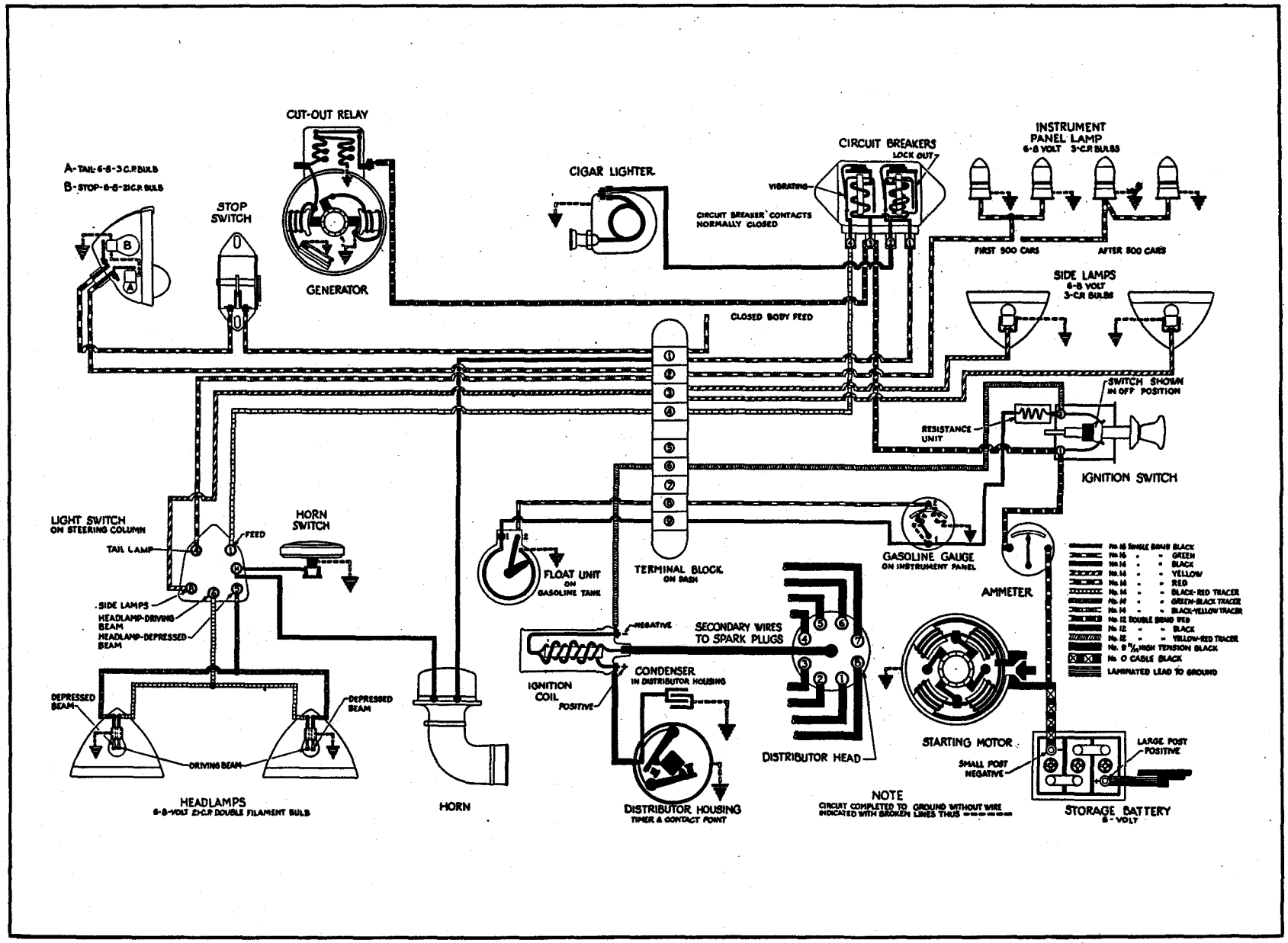

Plate 33. Circuit diagram, La Salle 303—first type.

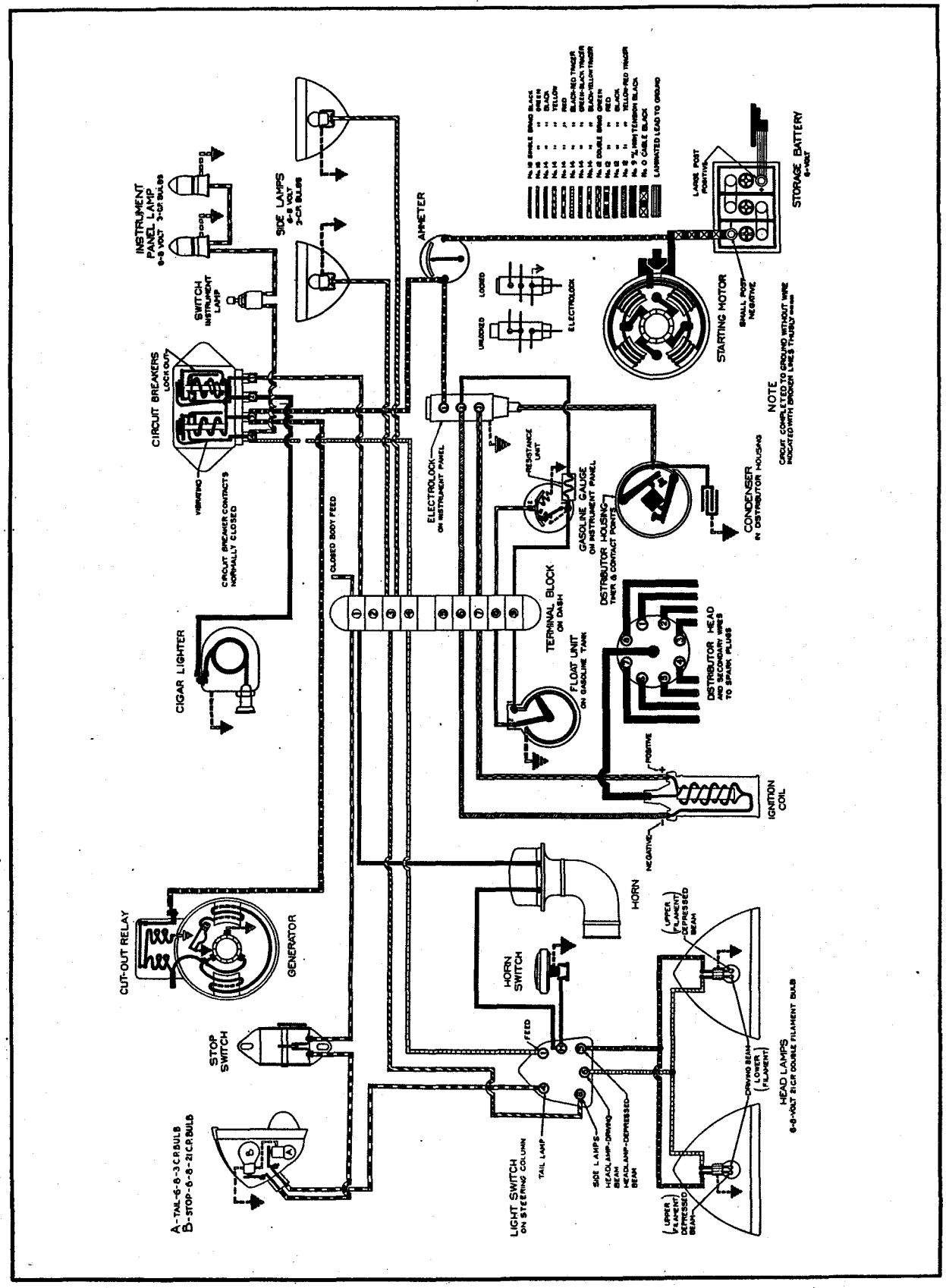

Plate 34. Circuit diagram, La Salle 303—second type.

Engine

Subject	Cadillac 341		LaSalle 303-328		Specifications	Remarks
Bore	A	B	....	....	3 1/16 in.	
	...	...	303	....	3 1/8 in.	
	...	...	....	328	3 1/4 in.	
Compression—						
Average compression pressure, low-compression cylinder heads	A	B	303	328	90-92 lbs. per sq. in. at 1000 R. P. M.	At the elevation of Detroit.
Average compression pressure, high-compression cylinder heads	A	B	303	328	105-107 lbs. per sq. in. at 1000 R. P. M.	
Ratio, low-compression cylinder heads	A	B	303	328	4.8 to 1	Low-compression cylinder heads are standard on 341-A and 303 cars. High-compression cylinder heads are standard on 341-B and 328 cars.
Ratio, high-compression cylinder heads	A	B	303	328	5.3 to 1	
Identification marks—						
Low-compression cylinder heads	A	...	303	....	No characteristic marks.	
High-compression cylinder heads	A	B	303	....	"HC-53"	
	...	...	....	328	"HC-53" "328" at lower edge of head	5.3 to 1 compression ratio.
Horsepower, rated	A	B	....	....	35.0	
	...	...	303	....	31.2	
	...	...	....	328	33.8	
Piston displacement	A	B	....	....	341 cu. in.	
	...	...	303	....	303 cu. in	
	...	...	....	328	328 cu. in.	
Stroke	A	B	303	328	4 1/16 in.	
CAMSHAFT						
Bearing clearance	A	B	303	328	New limits, .0027 to .0037 in. Worn limit, not over .005 in.	
Bearings, out of round	A	B	303	328	Not over .005 in.	
End-play in camshaft	A	B	303	328	New limits, .005 to .015 in. Worn limit, not over .020 in.	
CHAINS						
CAMSHAFT CHAIN						
Adjustment	A	B	303	328	Not adjustable	
No. of links	A	B	303	328	54	
Pitch	A	B	303	328	1/2 in.	
Type	A[1]	...	303[1]	....	645	Before engine unit 3-10155 on 341-A cars and 2-17156 on 303 cars.
	A[2]	B	303[2]	328	B-45	Beginning with engine unit 3-10155 on 341-A cars and 2-17156 on 303 cars.
Width	A	B	303	328	1 3/4 in.	
GENERATOR AND WATER PUMP CHAIN						
Adjustment	A	B	303	328	1/8 in. measured at top of sprocket housing	See Note 3 in Cooling System Group, Page 43. *Plate 36, Fig. 3.*
No. of links	A	B	303	328	57	
Pitch	A	B	303	328	1/2 in.	
Type	A	B	303	328	B-45	

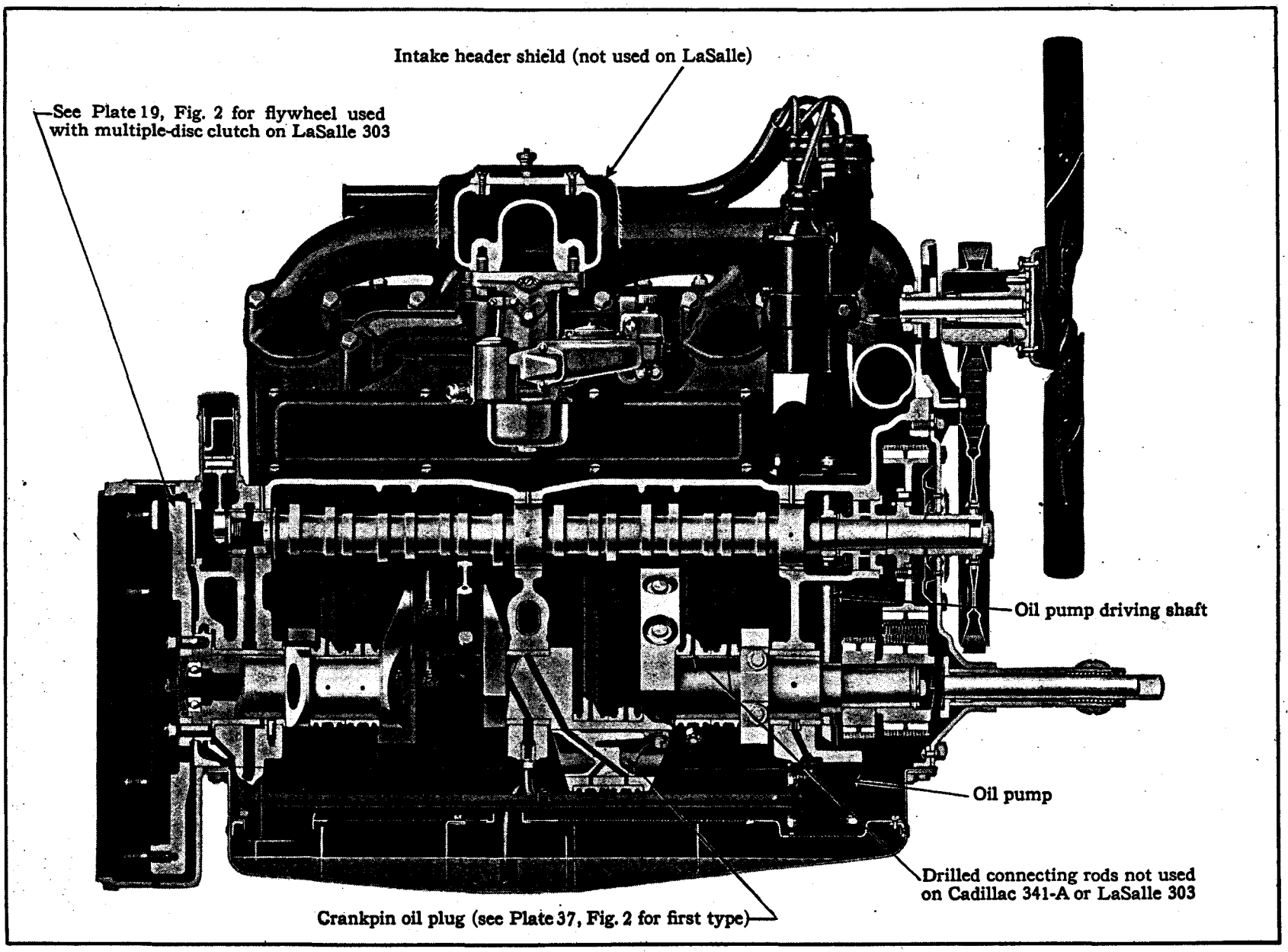

Plate 35. Sectional view of engine.

Subject	Cadillac 341		LaSalle 303-328		Specifications	Remarks
Width	A	B	303	328	1¼ in.	
CONNECTING RODS						
Alignment	A	B	303	328		See Note 1.
Assembly	A	B	303	328		See Note 2.
Center to center length	...	...	303[1]	....	10 in.	Before engine unit 2-13001.
	A	B	303[2]	328	10½ in.	Beginning with engine unit 2-13001 on 303 cars.
Clearance between bushing and piston pin	A	B	303	328		See note 6.
Clearance between lower bearing and crankpin	A	B	303	328	New limits, .001 to .0025 in. Worn limit, not over .006 in.	See note 3.
End-play of lower bearing	A	B	303	328	New limits, .008 to .012 in. Worn limit, not over .015 in.	
CRANKSHAFT AND MAIN BEARINGS						
Crankpin diameter	A	B	303	328	2⅜ in.	
Crankpin journals, out of round	A	B	303	328	New limit, .0002 in. Worn limit, not over .004 in.	
End play of crankshaft	A	B	303	328	New limits, .002 to .004 in. Worn limits not over .010 in.	
Length of crankshaft, over all	A	B	303	328	28¼ in.	
Length of crankshaft, front to rear bearing, inclusive	A	B	303	328	23 11/32 in.	
Main bearing clearance	A	B	303	328	New limits, .001 to .002 in. Worn limit, not over .004 in.	See note 4.
Main bearing journals, diameter	A	B	303	328	2⅜ in.	
Main bearing, out of round	A	B	303	328	New limit, .0002 in. Worn limit, not over .005 in.	
ENGINE LUBRICATION						
Crankcase oil capacity	A	B	303	328		See capacities in Lubrication Table, Page 83.
Thinning lubricant with kerosene	A	B	303	328		See Lubrication Table, Page 83.
OIL FILTER						
Cartridge, replacement of	A	B	303	328	12,000 miles	Oil pan and screen should also be removed and cleaned.
Cartridge, type	A	B	303	328	A. C. Type B-3	
Valve spring, compression	A	...	303	....	6 ozs. at 5/8 in.	If spring is weak, correct by stretching to 11/16—23/32 in. A few later cars do not have the check valve.
OIL PUMP						
Backlash between spiral drive gears	A	B	303	328	Not over .018 in.	
Clearance between bushing and drive shaft	A	B	303	328	New limits, .001—.0025 in. Worn limit, not over .010 in.	
Clearance between bushing in idler gear and shaft	A	B	303	328	New limits, .001—.0025 in. Worn limit, not over .005 in.	
Clearance between outside diameter of gears and pump body	A	B	303	328	New limits, .003—.005 in. Worn limit, not over .008 in.	
End play in pump gears	A	B	303	328	New limits, .004—.009 in. Worn limit, not over .020 in.	

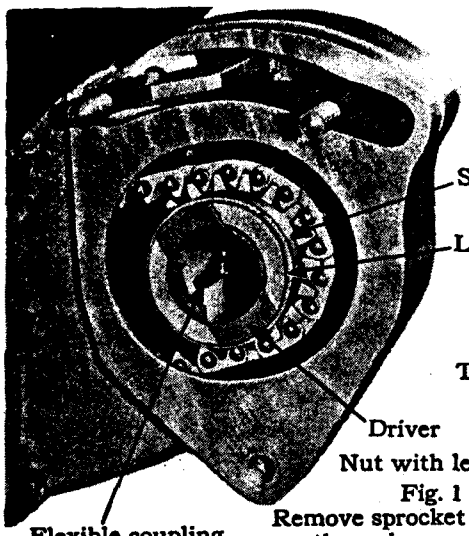

Fig. 1
Remove sprocket and driver through rear opening

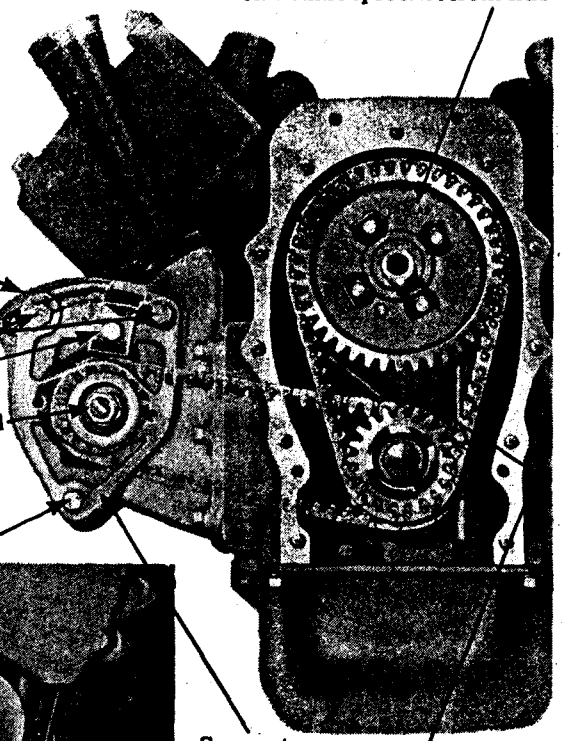

Fig. 3
Front end chains

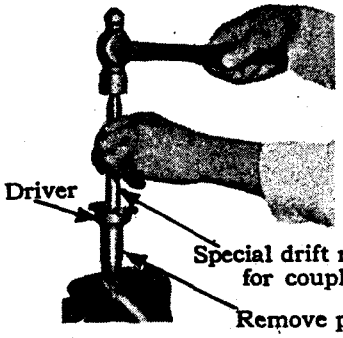

Fig. 2
Removing shaft and flexible couplings from driver

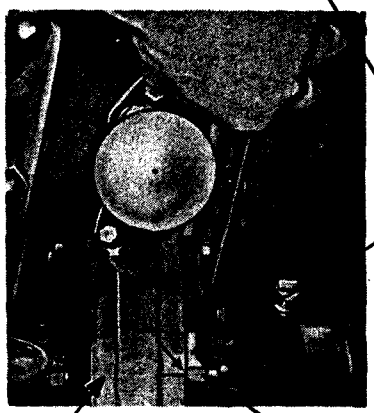

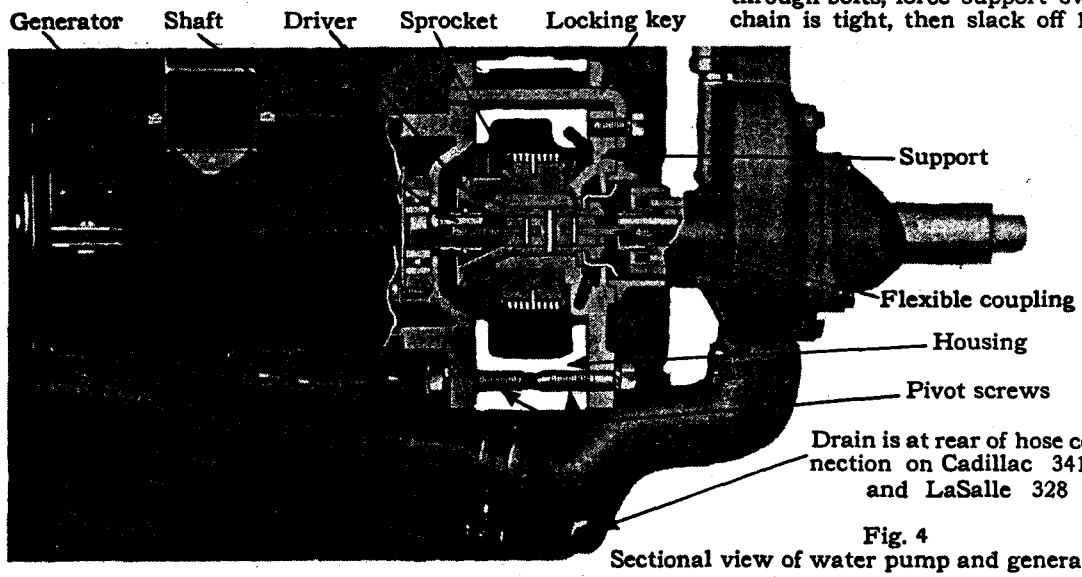

Fig. 4
Sectional view of water pump and generator drive

Plate 36. Water pump and generator drive.

Subject	Cadillac 341		LaSalle 303	LaSalle 328	Specifications	Remarks
End play in spiral drive gear	A	B	303	328	New limits, .005—.015 in. Worn limit, not over .020 in.	
Thickness of pump cover gasket	A	B	303	328	.009—.011 in.	
PRESSURE REGULATOR						
Adjustment	A[1]	...	303[1]	....	By-pass adjusting screw	Before engine unit 3-10979 on 341-A cars and 2-17542 on 303 cars.
	A[2]	B	303	328	No adjustment necessary	Beginning with engine unit 3-10979 on 341-A cars and 2-17542 on 303 cars.
Clearance between plunger and housing	A	B	303	328	New limits, .003—.006 in. Worn limit, not over .008 in.	
Normal pressure	A	B	303	328	5-10 lbs. at idling speed	
Plunger valve opens	A	B	303	328	20 lbs.	
Spring, free length	A	B	303	328	1¾ in.	
Spring, compression	A	B	303	328	2 lb. at 1 1/16 in.	
PISTONS AND CYLINDERS						
Cylinder bore, out of round	A	B	303	328	New limit, .0005 in. Worn limit, not over .002 in.	
Piston, out of round	A	B	303	328	New limit, .0005 in. Worn limit, not over .002in.	
Piston clearance at top land	A	B	303	328	.015 in. minimum	
Piston clearance at skirt	...	...	303	....	New limit, .0025 in.	See note 5.
	A	B	....	328	New limit, .003 in.	See note 5.
Limits on cylinder bore, standard	A	B	....	....	3.3125—3.3145 in.	The four bores of the same cylinder block are held within .0005 in. of each other.
	...	...	303	....	3.125—3.127 in.	The four bores of the same cylinder block are held within .0005 in. of each other.
	...	...	....	328	3.2500—3.2520 in.	The four bores of the same cylinder block are held within .0005 in. of each other.
Limits on cylinder bore	A	B	303	328	.....	Oversize Cylinders are honed to fit the pistons with which they are supplied.
Limits on pistons—						
Standard No. 1	A	B	....	....	3.309—3.3095 in.	
No. 2	A	B	....	....	3.3095—3.310 in.	Marked U1, U2, U3 and U4, respectively.
No. 3	A	B	....	....	3.310—3.3105 in.	Marked U1, U2, U3 and U4, respectively.
No. 4	A	B	....	....	3.3105—3.311 in.	Marked U1, U2, U3 and U4, respectively.
Standard No. 1	...	...	303	....	3.1222—3.1227 in.	
No. 2	...	...	303	....	3.1227—3.1232 in.	
No. 3	...	...	303	....	3.1232—3.1237 in.	
No. 4	...	...	303	....	3.1237—3.1242 in.	First type with ¾ in. piston pin hole marked P1, P2, etc. Second type with ⅞ in. piston pin hole marked V1, V2, etc.
No. 5	...	...	303	....	3.1242—3.1247 in.	First type with ¾ in. piston pin hole marked P1, P2, etc. Second type with ⅞ in. piston pin hole marked V1, V2, etc.
No. 6	...	...	303	....	3.1247—3.1252 in.	First type with ¾ in. piston pin hole marked P1, P2, etc. Second type with ⅞ in. piston pin hole marked V1, V2, etc.
No. 7	...	...	303	....	3.1252—3.1257 in.	First type with ¾ in. piston pin hole marked P1, P2, etc. Second type with ⅞ in. piston pin hole marked V1, V2, etc.
Standard No. 1	...	...	....	328	3.2455—3.2460 in.	
No. 2	...	...	....	328	3.2460—3.2465 in.	
No. 3	...	...	....	328	3.2465—3.2470 in.	Marked AA1, AA2, etc.
No. 4	...	...	....	328	3.2470—3.2475 in.	Marked AA1, AA2, etc.
Oversize—						
+.005	A	B	....	....	3.314—3.315 in.	
	...	...	303	....	3.1272—3.1288 in.	Marked +.005
	...	...	....	328	3.2505—3.2515 in.	Marked +.005
+.010	A	B	....	....	3.319—3.320 in.	
	...	...	303	....	3.1322—3.1332 in.	Marked +.010
	...	...	....	328	3.2555—3.2565 in.	Marked +.010
+.015	A	B	....	....	3.324—3.325 in.	
	...	...	303	....	3.1372—3.1382 in.	Marked +.015
	...	...	....	328	3.2605—3.2615 in.	Marked +.015

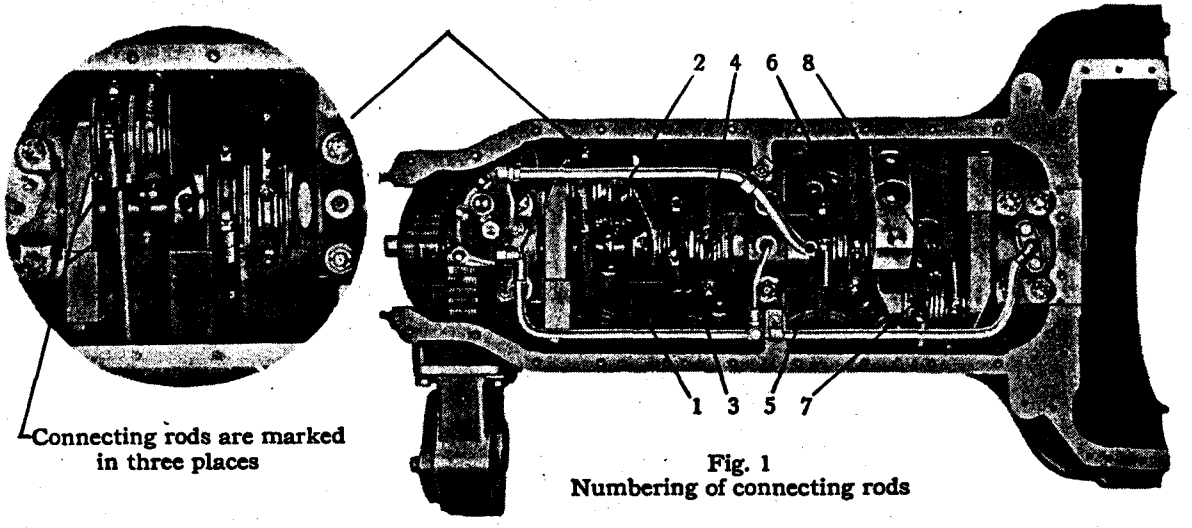

Fig. 1
Numbering of connecting rods

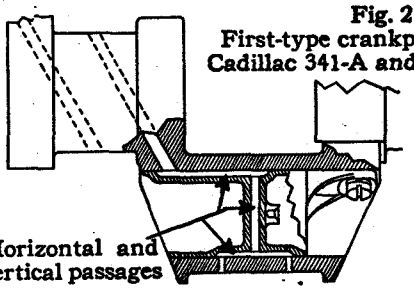

Fig. 2
First-type crankpin oil plugs.
Cadillac 341-A and LaSalle 303

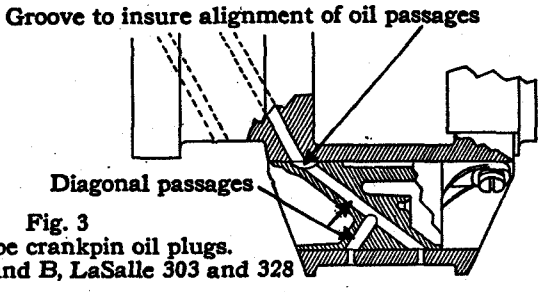

Fig. 3
Second-type crankpin oil plugs.
Cadillac 341-A and B, LaSalle 303 and 328

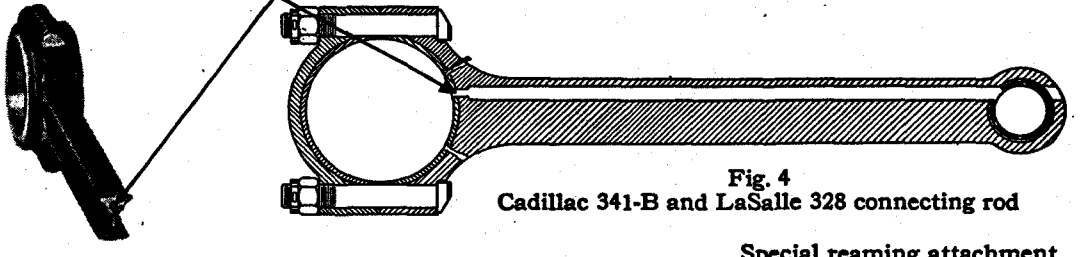

Fig. 4
Cadillac 341-B and LaSalle 328 connecting rod

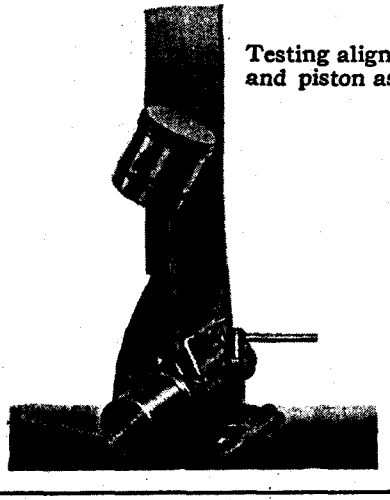

Fig. 5
Testing alignment of connecting rod and piston assembly on tool 109214

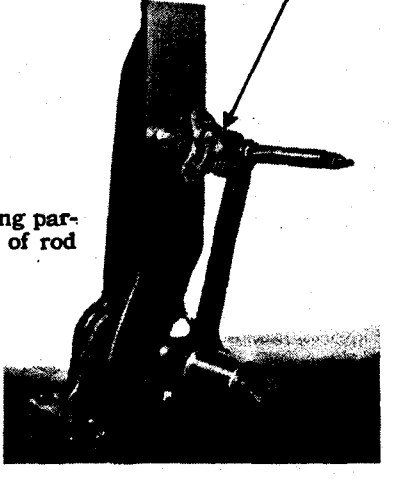

Fig. 6
Reaming piston pin bushing parallel to hole in large end of rod

Plate 37. Connecting rod details.

Subject	Cadillac 341		LaSalle 303-328		Specifications	Remarks
+.020	A	B	....	....	3.329—3.330 in.	
	...	...	303	....	3.1422—3.1432 in.	Marked +.020
	...	...	....	328	3.2655—3.2665 in.	
+.030	A	B	....	....	3.339—3.340 in.	
				328	3.2755—3.2765 in.	Marked +.030
+.031	...	...	303	....	3.1532—3.1542 in.	Marked +.031
PISTON PINS						
Diameter	...	...	303[1]	....	⅞ in.	Before engine unit 2-13001
	A	B	303[2]	328	⅞ in	Beginning with engine unit 2-13001 on 303 cars.
Clearance between pin and bushing	A	B	303	328	.....	See note 6.
Clearance between pin and piston	A	...	303	....	Hand press fit	
	...	B	....	328	100 to 600 lbs. press fit on lock screw end (hand push fit on opposite end)	See note 7.
Identification marks	A	...	303	....	No characteristic marks.	
	...	B	....	328	60° notch .015 in. deep on end opposite lock screw.	Piston pins for 341-A engines must not be installed in 328 engines as they will score the cylinders. *Plate 40, Fig. 2*
Lubrication	A	...	303	....	Splash	
	...	B	....	328	Pressure feed through hole drilled in connecting rod.	
PISTON RINGS						
Clearance between piston rings and grooves in piston	A	B	303	328	New limits, .0015—.0025 in. Worn limit, not over .004 in.	
Gap clearance	A	B	....	328	New limits, .008—.018 in. Worn limit, not over .025 in.	
	...	...	303	....	New limits, .005—.015 in. Worn limit, not over .025 in.	
Number of compression rings	A	B	303	328	2	
Number of oil rings	A	B	303	328	1	
Ring installation	...	...	303[1]	....	All rings above piston pin	Before engine unit 2-6918.
	A	B	303[2]	328	2 comp. rings above pin, 1 oil ring below pin	Beginning with engine unit 2-6918 on 303 cars.
Width of rings	A	B	303	328	5/16 in.	
VALVES						
Clearance between valve lifter and guide	A	B	303	328	New limits, .0015—.002 in. Worn limit, not over .005 in.	
Clearance between valve lifter roller and pin	A	B	303	328	New limits, .0015—.0025 in. Worn limit, not over .004 in.	
Spring compression, valve closed	A	B	303	328	77-81 lbs. at 2.5 in.	Before engine unit 3-14057 on 341-A cars and 2-20272 on 303 cars compression pressure was 133-139 lbs. with spring compressed to 2.148 in.
Spring compression, valve open	A	B	303	328	156-164 lbs. at 2.148 in.	
Spring type	A[1]	...	303[1]	....	Straight	Before engine unit 3-14057 on 341-A cars and 2-20272 on 303 cars.
	A[2]	B	303[2]	328	Conical	Beginning with engine unit 3-14057 on 341-A cars and 2-20272 on 303 cars. Conical Springs should be installed with large end at bottom.

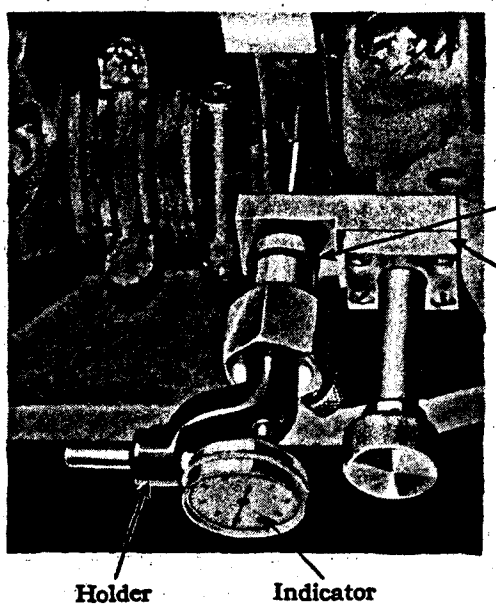

Fig. 1
Indicating clearance in front main bearing.
Use adapters A and B with holder 65530
(Use adapter A only for center main bearing)



Fig. 2
Removing rear main bearing
cap with puller 109406

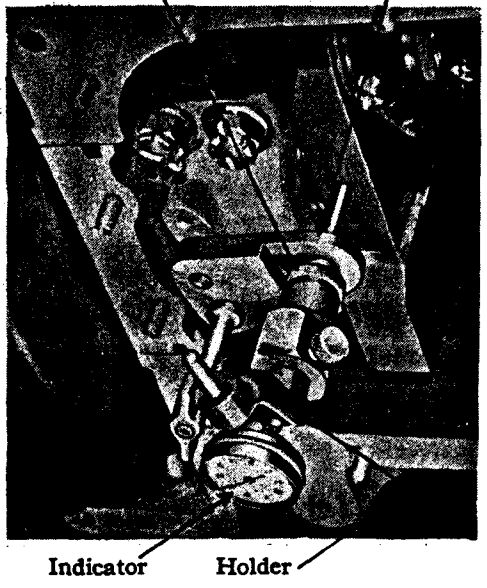

Fig. 3
Indicating clearance in rear main bearing.
Use adapters A and C with holder 65560

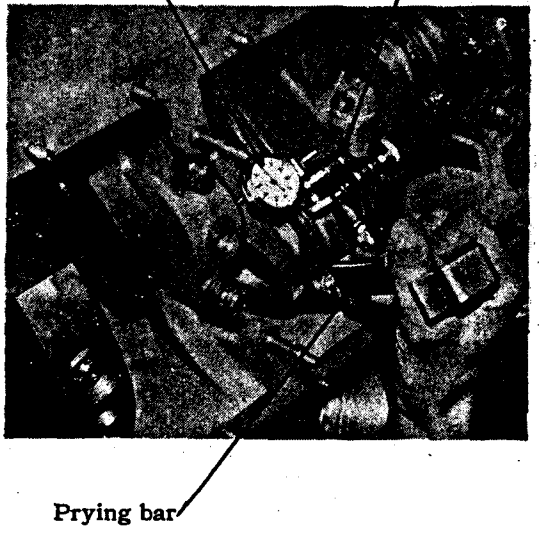

Fig. 4
Indicating clearance in connecting rod bearing.
Holder 109414, prying bar 109415

Plate 38. Indicating bearing clearance.

Subject	Cadillac 341		LaSalle 303-328		Specifications	Remarks
INLET VALVES						
Clearance between stem and guide in cylinder blocks	A	B	303	328	New limits, .001 to .0035 in. Worn limit, not over .006 in.	
Clearance between stem and valve lifter	A	B	303	328	.004 in.	Adjust when engine is cold.
Head diameter	A	B	303	328	1.660—1.666 in.	
Lift	A	B	303	328	$\frac{23}{64}$ in.	
Seat, angle of	A	B	303	328	30°	
Seat, width of	A	B	303	328	$\frac{1}{16}$ in.	
Stem diameter	A	B	303	328	$\frac{3}{8}$ in.	
Stem length	A	B	303	328	6 $\frac{5}{32}$ in. from seat	
EXHAUST VALVES						
Clearance between stem and guide in cylinder block	A	B	303	328	New limits, .002 to .0045 in. Worn limit, not over .006 in.	
Clearance between stem and valve lifter	A	B	303	328	.006 in.	Adjust when engine is cold.
Head diameter	A	B	303	328	1.634—1.640 in.	
Lift	A	B	303	328	$\frac{23}{64}$ in.	
Angle of seat	A	B	303	328	45°	
Seat, width of	A[1]	...	303[1]	....	$\frac{1}{16}$ in.	Before engine unit 3-5809 on 341-A cars and 2-15992 on 303 cars.
	A[2]	B	303	328	$\frac{5}{64}$ in.	Beginning with engine unit 3-5809 on 341-A cars and 2-15992 on 303 cars.
Stem diameter	A	B	303	328	$\frac{3}{8}$ in.	
Stem length	A	B	303	328	6$\frac{1}{8}$ in. from seat	
VALVE TIMING						
Intake valve, opens	A	B	303	328	9½° before top dead center	See note 8.
Intake valve, closes	A	B	303	328	58½° after bottom dead center	
Exhaust valve, opens	A	B	303	328	46° before bottom dead center	
Exhaust valve, closes	A	B	303	328	5° after top dead center	

1. Straightening Connecting Rods

La Salle and Cadillac connecting rods are of alloy steel of such toughness that it is not entirely satisfactory to align them by straightening. If attempt is made to straighten a rod it is apt to return sooner or later to its original shape.

In manufacture, the piston pin bushing is bored in a fixture which insures perfect parallelism between the hole in the large end of the rod and the hole bored in the bushing.

In service, the same thing can be accomplished by reaming on the special fixture which is provided for this purpose. (Tool Numbers 109214-5-6).

If straightening is resorted to, care must be taken to bend or twist the rod farther than necessary to align it and then spring the rod back in the original direction until it is straight. This procedure helps to "normalize" the strains in the steel and prevent further distortion from taking place.

2. Assembly of Connecting Rods

The following points should be checked when installing connecting rods:

1. The chamfered face of the bearings should be toward the end of the crankpin, the plain faces toward each other.

2. The numbers on the rods should be toward the bottom of the engine.

3. The oil holes in the rods should point toward the pistons.

4. The numbers on the caps should correspond to the numbers on the rods.

3. Connecting Rod Bearings

The connecting-rod bearing clearance should be measured with a dial indicator using the fixture designed for the purpose. (Tool Number 109414).

The connecting rod bearings are not separate parts but are cast in place in the connecting rod by a special process. The bearings are not adjustable and no attempt should be made to dress down the cap on the rod to take up the clearance. When a connecting rod bearing clearance exceeds the prescribed amount the rod should be removed and replaced with a rebabbitted rod. Rebabbitting of rods should not be attempted outside the factory. Rods should be returned to the factory and exchanged for rebabbitted rods. Rods, the caps of which have been dressed down, will not be exchanged.

4. Main Bearings

It is recommended that main bearing clearance be in-

dicated with a dial indicator using the special fixture supplied for the purpose. (Tool Number 65530).

No shims or liners are used under the main bearing caps and no attempt should be made to take up the bearings to compensate for wear. When worn enough to require it, the bearings should be replaced. Replacement bearings are furnished to exact size and do not require reaming or scraping.

Special attention is required when removing or installing the rear main bearing cap because the sides of this cap must be oil tight. For this purpose, wood plugs are driven into grooves in the cap when it is installed. To remove the cap a special puller is necessary. New wood plugs must then be installed after the cap is put back.

5. Piston Clearance

The piston clearance should be measured with feeler ribbons. A feeler ribbon .003-inch thick and ¼ to ½-inch wide should be used on Cadillac 341-A and B and La Salle 328 engines. On La Salle 303 engines, a feeler ribbon .0025-inch thick preferably ¼-inch wide, should be used. The meaurement should be taken at the skirt of the piston and at right angles to the piston pin with the piston midway between the top and bottom of the cylinder bore.

To measure accurately with feeler ribbons, consideration must be given to the pull required to withdraw the ribbon. The pull required for both the .0025-inch and the .003-inch ribbons should be between 2½ and 5 lbs. This test must be made with no oil on either the cylinder or piston. It is also very essential that the piston be not more than .0005-inch out of round at the skirt.

6. Fitting Piston Pins in Bushings

The recommended test for piston pin fit on engines with all three rings above the piston pin (first type on La Salle) is to hold the piston and rod assembly by the piston in a horizontal position. The connecting rod should then just drop of its own weight.

On engines with the oil ring below the piston pin, test by spinning the piston pin in the bushing perfectly dry. The pin should be free enough to spin but should have no perceptible looseness.

Piston pin bushings should preferably be reamed in the special aligning and reaming fixture furnished for the purpose.

7. Fitting Piston Pins in Pistons

The present practice in manufacture is to make one end of the piston pin a tight press fit in the side of the piston with the locking screw and the other end a hand press fit to allow for expansion. In service it is customary to fit both ends of the piston pin the same, which should allow a hand press fit. In other words, it should be just possible to push the pin into the piston by pressing with both thumbs on the end of the pin.

CAUTION: When removing and installing the piston pins always place the locking screw side of the piston pin down so that the pressure on the pin will not force the piston out of round.

8. Valve Timing

Because of the shape of the cams, the exact time of opening and closing of the valves depends upon the valve stem clearance and may vary as much as 10 degrees. The accompanying figures are actual readings taken on a cold engine.

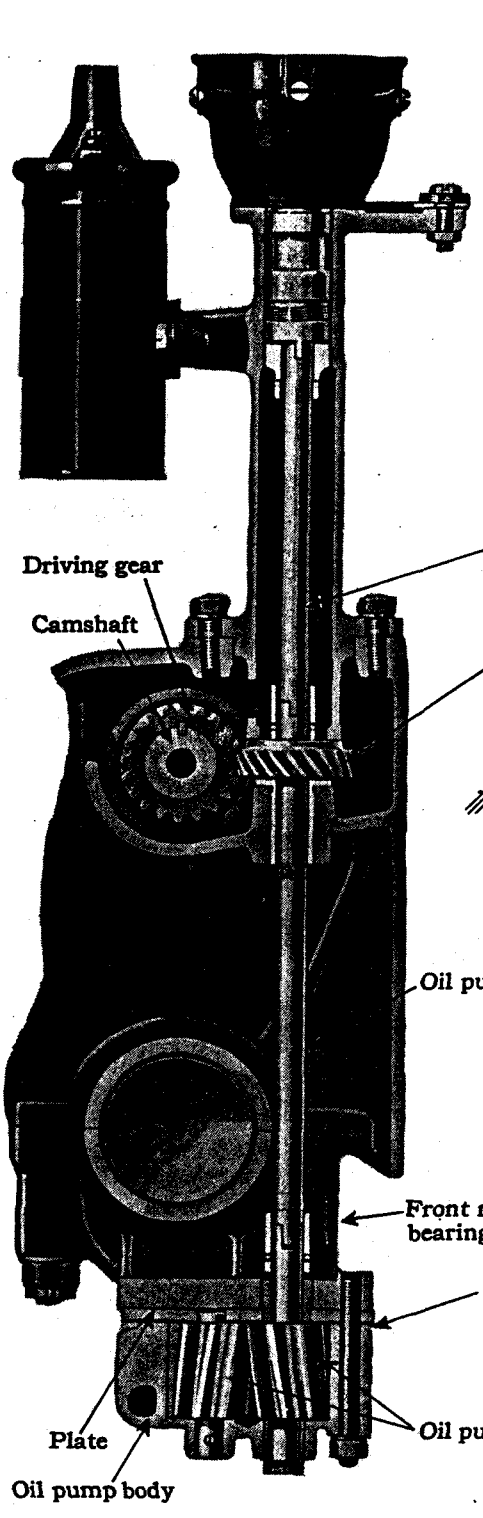

Fig. 1
Sectional view of oil pump and distributor drive

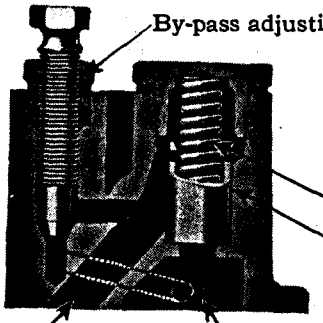

Fig. 2
Sectional view of oil pressure regulator, first type, with adjusting screw

Fig. 3
Sectional view of oil pressure regulator, second type

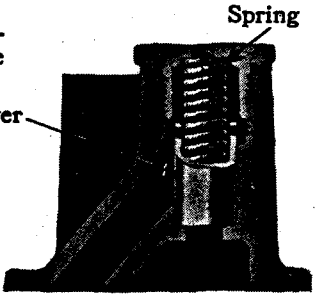

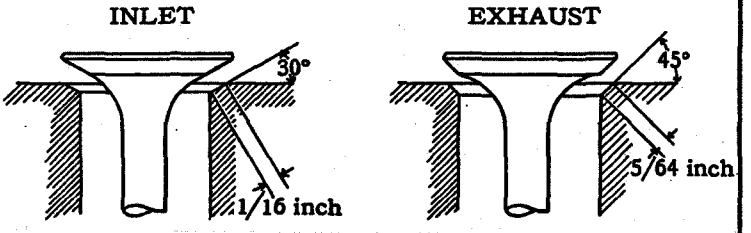

Fig. 4
Width and angle of valve seat

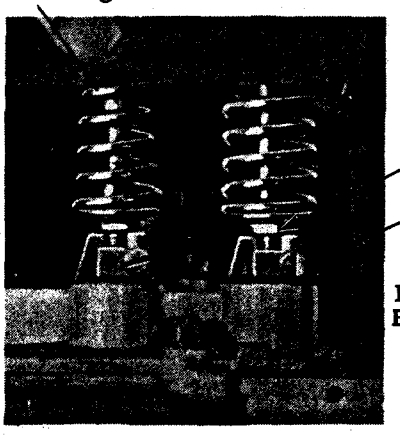

Fig. 5
Valve stem clearance adjustment

Plate 39. Oil pump, pressure regulator and valves.

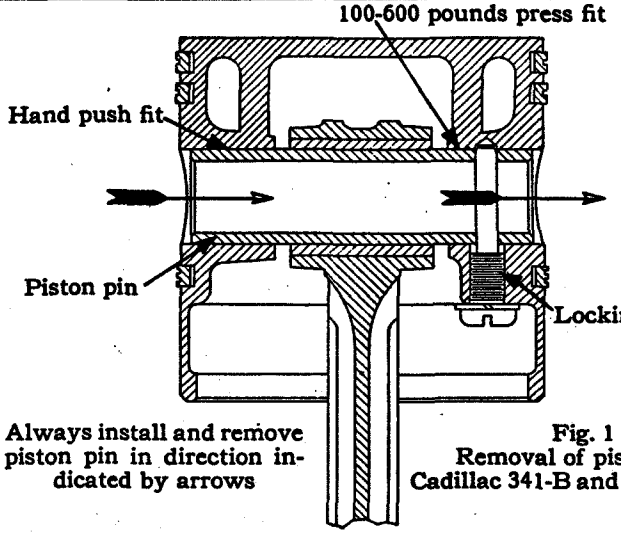

Fig. 1
Removal of piston pin.
Cadillac 341-B and LaSalle 328

Piston pins for Cadillac 341-A engines must not be installed in LaSalle 328 engines

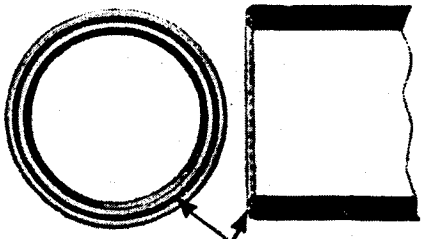

Fig. 2
Enlarged view showing identification marks on LaSalle 328 piston pins

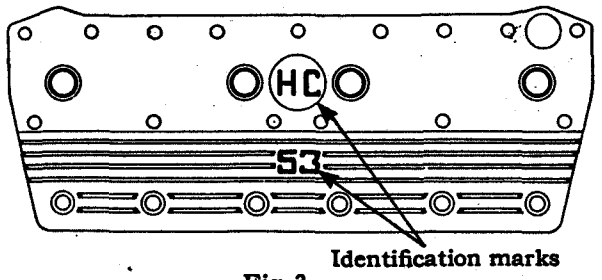

Fig. 3
High-compression cylinder head markings

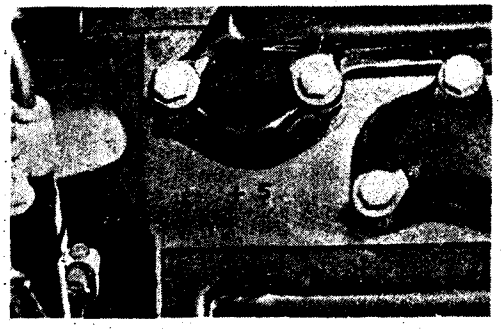

Fig. 4
Cylinder block showing location of oversize marking

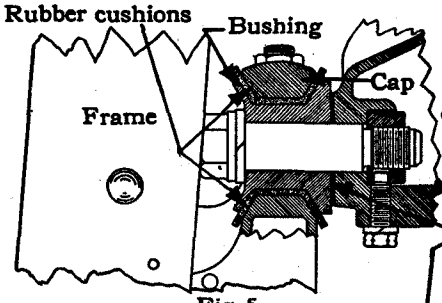

Fig. 5
Sectional view of engine support.
Cadillac 341-A

Loosen cap nuts on one end of cross-member before aligning cushions with support bracket

Shim for aligning bushing with support bracket

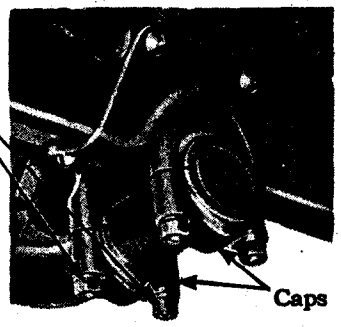

Fig. 6
Tubular cross-member under transmission.
Cadillac 341-A

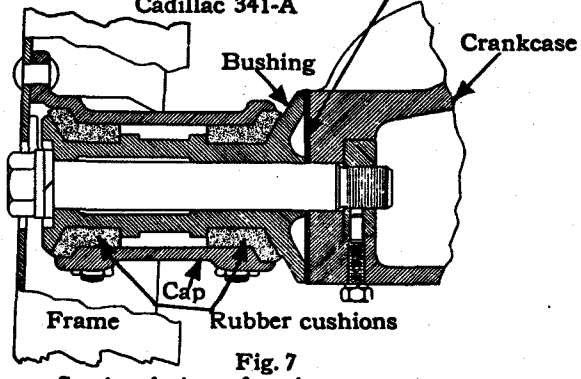

Fig. 7
Sectional view of engine support.
Cadillac 341-B and LaSalle 328

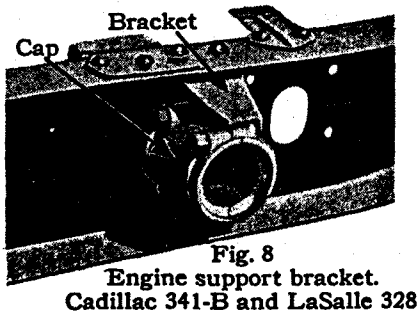

Fig. 8
Engine support bracket.
Cadillac 341-B and LaSalle 328

Plate 40. Cylinder head, piston pin and engine rear support.

Frame

Subject	Cadillac 341		LaSalle 303-328		Specifications	Remarks
Wheelbase	A	B	....	....	140 in. and 152 in.	Chassis with 152-in. wheelbase are intended primarily for commercial type bodies such as ambulances, etc.
	...	...	303	328	125 in. and 134 in.	
Overall length of car	A	B	....	....	213¼ in., 140 in. wheelbase	
	...	...	303	328	185 in., 125 in. wheelbase	
					196⅝ in., 134 in. wheelbase	
Overall width of car	A	B	....	....	73½ in., 140 in. wheelbase.	
	...	...	303	328	71 in., 125-134 in. wheelbase.	
FRAME						
Depth	A	...	....	....	7 5/16 in.	Measured at deepest part of frame.
	...	...	303	....	6½ in.	
	...	B	....	....	8 in.	
	...	...	....	328	6 9/16 in.	
Flange width	A	...	....	....	3¼ in.	
	...	B	....	....	3¼ in. top, 2 11/16 in. bottom	
	...	...	303	328	2½ in.	
Kick up, front	A	B	....	....	1¾ in.	
	...	...	303	328	¾ in.	
Kick up, rear	A	B	....	....	4 in.	
	...	...	303	328	5 in.	
Width, front	A	...	....	....	30 1/16 in.	
	...	...	303	....	29 in.	
	...	B	....	....	30 in.	
	...	...	....	328	29 1/16 in.	
Width, rear	A	...	....	....	35 1/16 in.	
	...	...	303	....	37½ in.	
	...	B	....	....	35 in.	
	...	...	....	328	37 9/16 in.	
Unit (Chassis) number, location of	A	B	303	328	On upper surface of left side bar opposite steering gear	

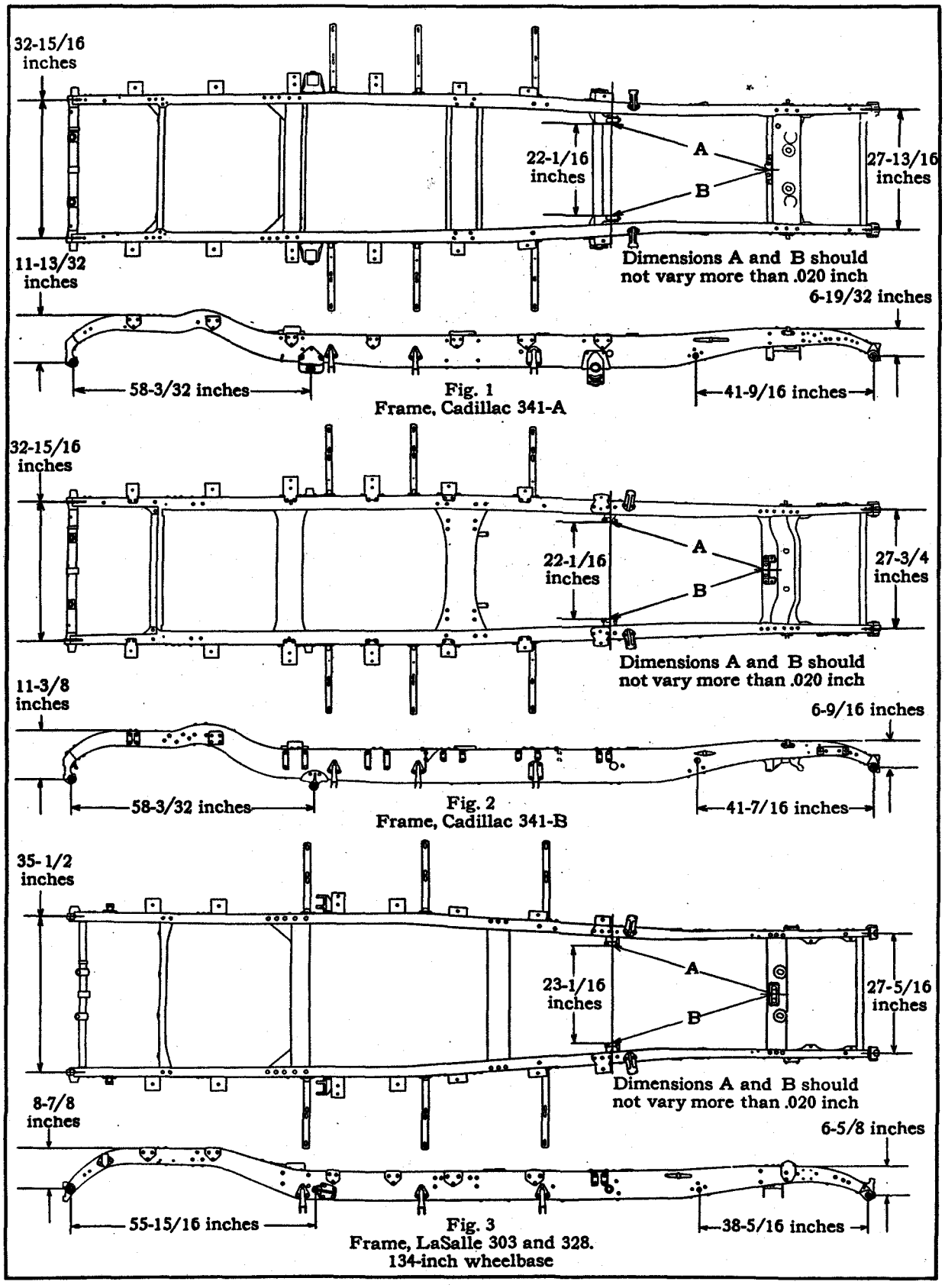

Fig. 1
Frame, Cadillac 341-A

Fig. 2
Frame, Cadillac 341-B

Fig. 3
Frame, LaSalle 303 and 328.
134-inch wheelbase

Plate 41. Diagrams of Cadillac and La Salle frames.

Gasoline System

Subject	Cadillac 341		LaSalle 303-328		Specifications	Remarks
Capacity of supply tank	A	B	....	....	21 gal.	Maximum gauge reading 20 gal.
	...	...	303	328	20 gal.	
Feed	A	B	303	328	Vacuum tank with auxiliary vacuum pump	
Gasoline gauge	A	B	303	328	Electric (Nagel)	
CARBURETOR						
Clearance between throttle disc and carburetor body	A	B	303	328	New limit, .003 in. Worn limit, not over .005 in.	
End play in throttle shaft	A	B	303	328	New limit, .0015 in. Worn limit, not over .005 in.	
Float setting	A	B	303	328	$\frac{11}{32}$ in.	
Size	A	B	303	328	2 in. (nominal)	
Size of nozzle	A	B	303	328	No. 16	
Throttle pump adjusting screw, fully open	A	B	303	328	7 turns	
Thermostat						
Air valve adjustment	A	B	303	328	$\frac{1}{64}$ $\frac{1}{32}$ in. Open at 65-85°F.	
Throttle pump control, closes	A	B	303	328	74°F. } Inner thermostat	
Throttle pump control, opens	A	B	303	328	78°F. }	
Vent control, closes	A	B	303	328	125°F. } Outer thermostat	
Vent control, opens	A	B	303	328	130°F. }	
Unit number, location of	A	B	303	328	Right side front on top flange	
VACUUM PUMP						
Clearance between connecting rod and crank journal on camshaft	A	B	303	328	New limits, .001—.003 in. Worn limits, not over .005 in.	
Clearance between piston and cylinder	A	B	303	328	New limits, .001—.0015 in. Worn limit, not over .003 in.	

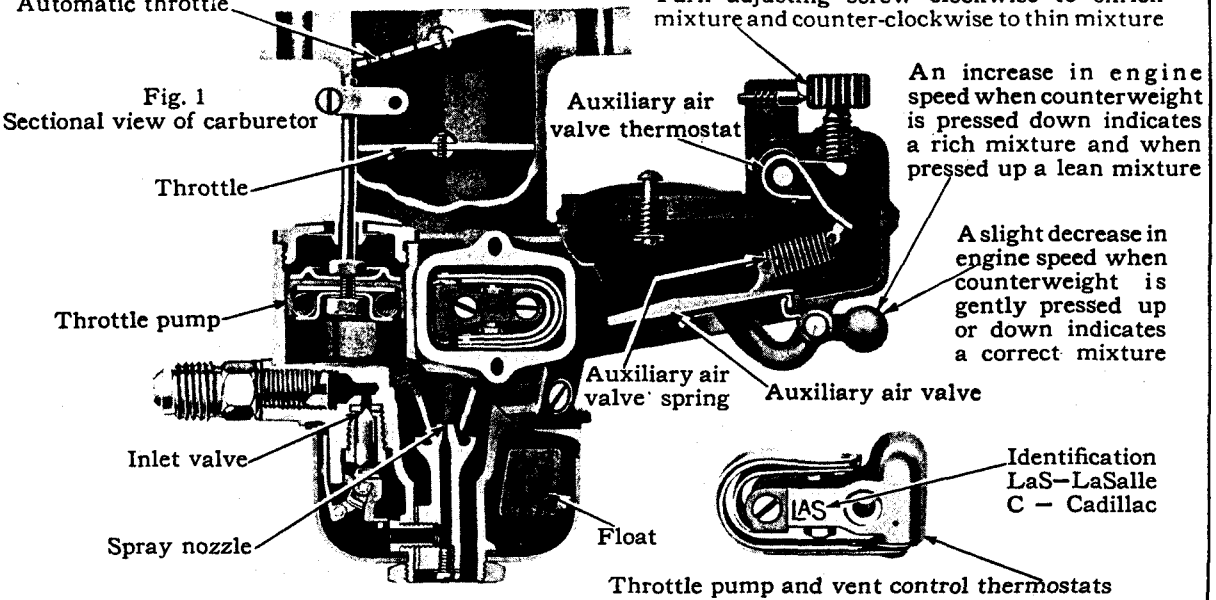

Fig. 1
Sectional view of carburetor

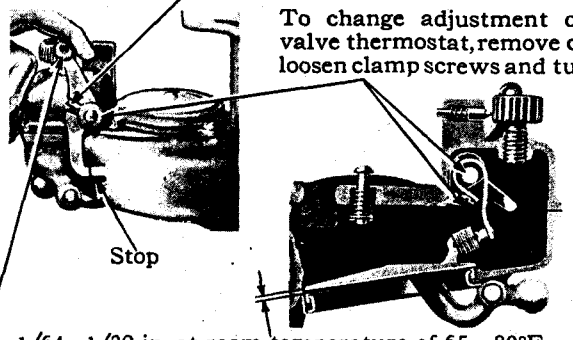

To test adjustment of auxiliary air valve thermostat, hold lever against stop (pull upper end of lever, do not push lower end) and press up auxiliary air valve

Fig. 2
Adjustment of choke and auxiliary air valve thermostat



Fig. 3
Throttle stop screw adjustment

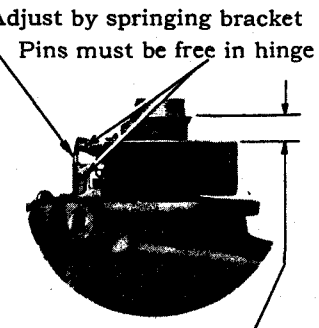

Fig. 4
Float setting

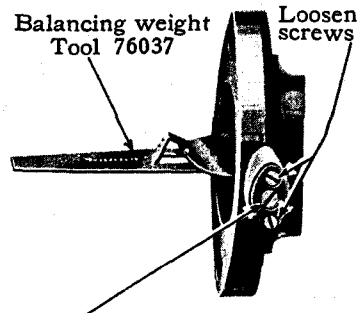

Fig. 5
Adjustment of automatic throttle

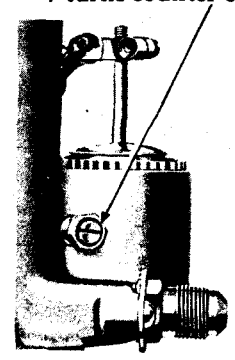

Fig 6
Throttle pump adjusting screw

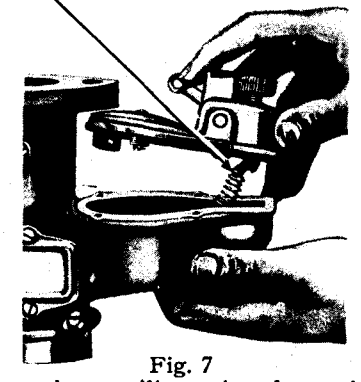

Fig. 7
Removing auxiliary air valve spring

Plate 42. Carburetor adjustments.

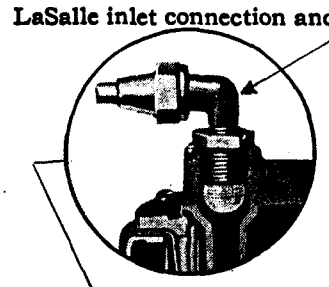

Fig. 1
Sectional view of vacuum tank

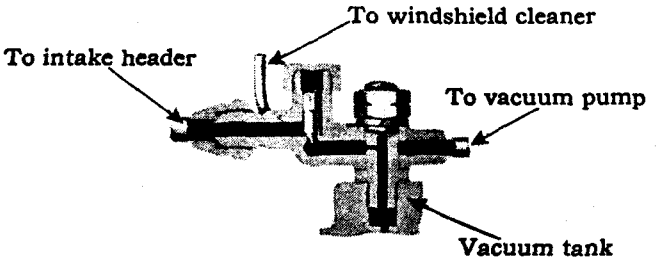

Fig. 2
First-type check valve—on vacuum tank.
LaSalle 303

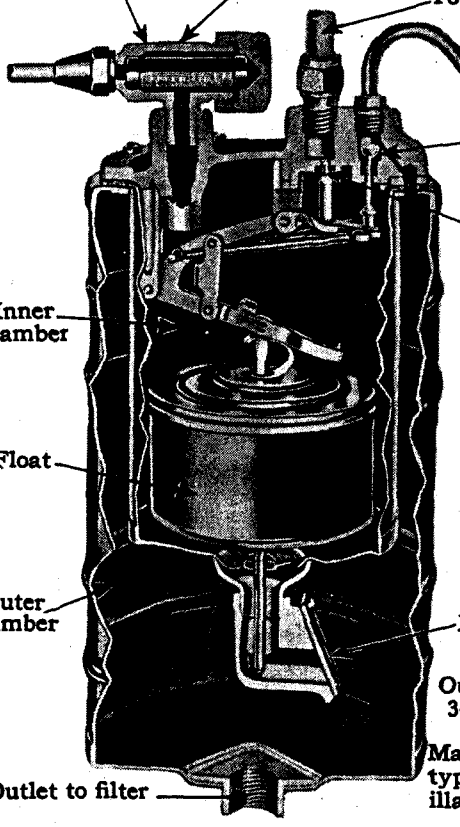

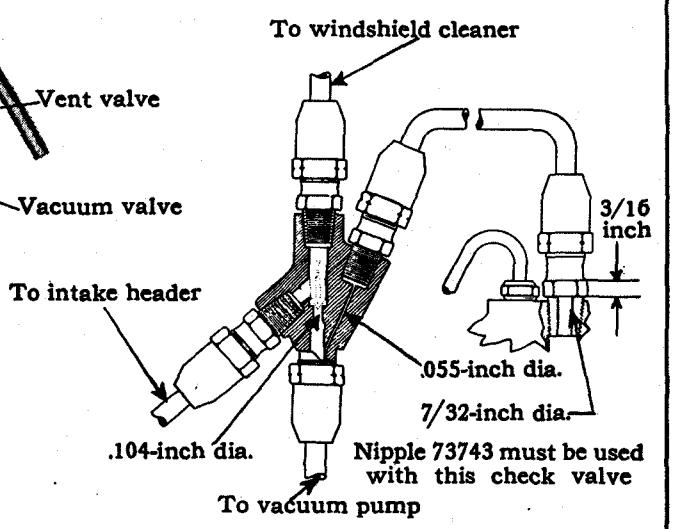

Fig. 3
Second-type check valve—on dash.
Cadillac 341-A and LaSalle 303

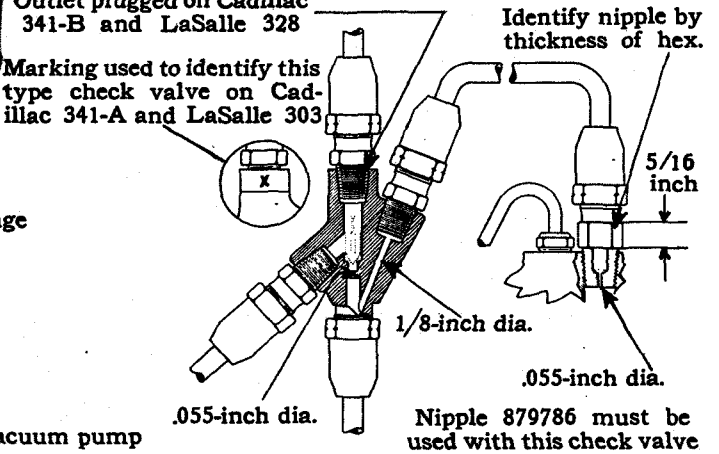

Fig. 4
Third-type check valve—on dash.
Cadillac 341-A and B, LaSalle 303 and 328

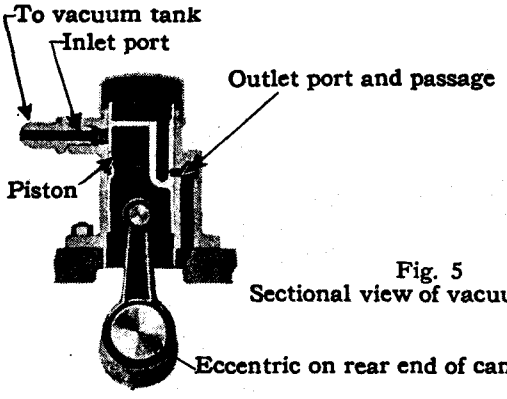

Fig. 5
Sectional view of vacuum pump

Plate 43. Vacuum tank, pump and check valve.

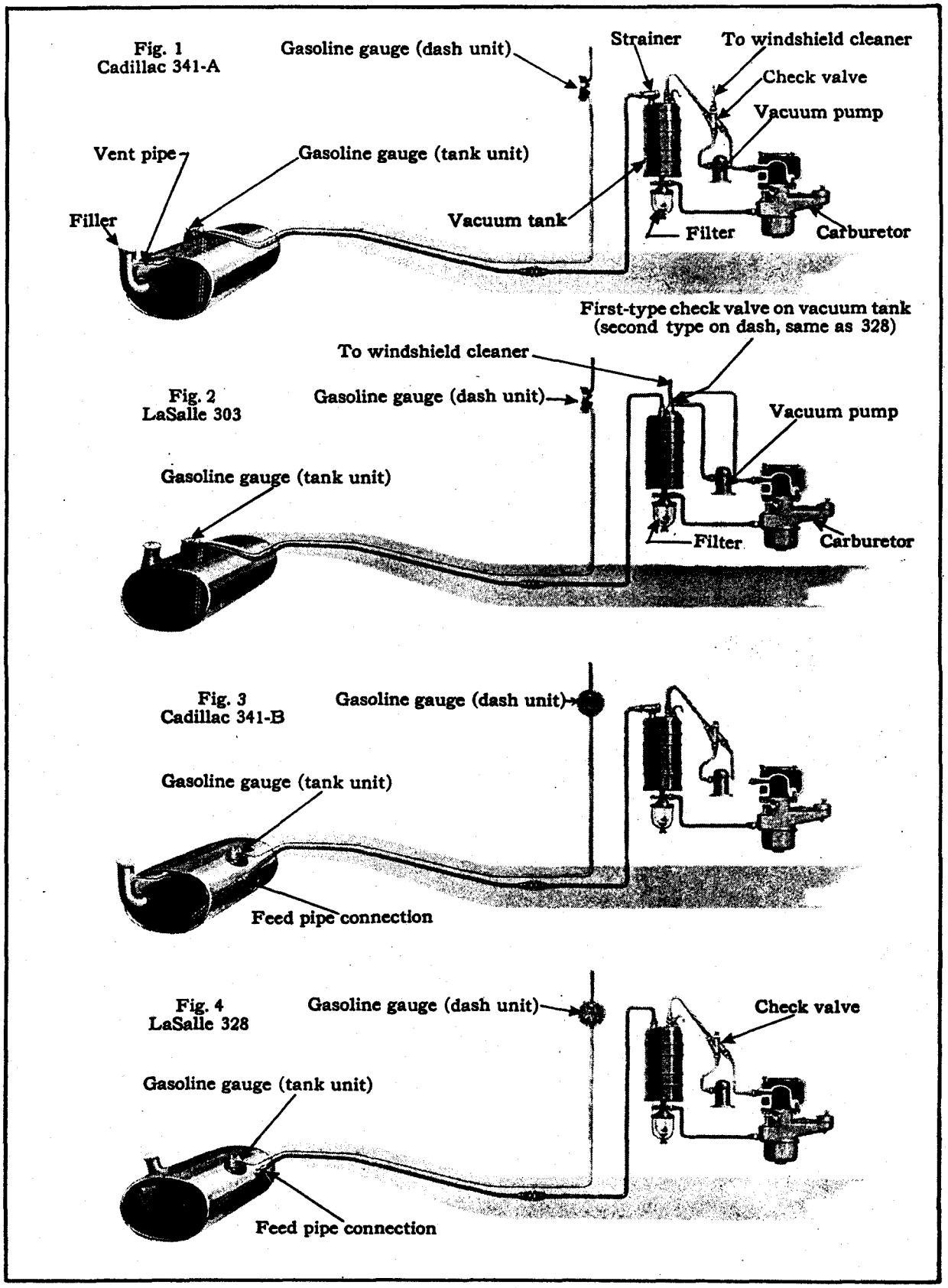

Plate 44. General arrangement of gasoline systems.

Lighting System

Subject	Cadillac 341		LaSalle 303-328		Specifications		Remarks
Cleaning headlamp reflectors	A	B	303	328			See note 1.
Headlamp lens, diameter	A	B	....	....	11 $\frac{5}{32}$ in.		
	....	....	303	328	10 $\frac{15}{32}$ in.		
Lamp bulbs, single or double contact	A	B	303	328	All single contact except two-filament headlamp bulbs which are double contact.		
Lamp bulb, sizes—					Candlepower	Mazda number	See note 2.
Headlamp bulb	A	B	303	328	21—21	1110	
Headlamp bulb	A	B	303	328	32—21	1116	Can be used as permitted by state regulations.
Parking lamp bulb	A	B	303	328	3	63	
Instrument lamp bulb	A	B	303	328	3	63	
Stop lamp bulb	A	B	....	....	21	1129	
	....	....	303	328	15	87	
Tail lamp bulb	A	B	....	....	3	63	
Running board step lamp bulb	A	B	....	....	3	63	
Closed car dome lamp bulb	A	B	303	328	3	63	
Rear quarter lamp bulb	A	B	303	328	3	63	
Voltage	A	B	303	328	6—8 volts		
Stop light, setting	A	B	303	328	Switch lever in "on" position at $\frac{3}{4}$—1 in. movement of brake pedal		

1. Cleaning Headlamp Reflectors

To preserve the original reflector surface as much as possible, it should be polished with a good cleaner that is free from abrasive materials. A paste made of rouge or talcum powder and alcohol makes a good cleaner for this purpose. A clean cloth should be used and all rubbing should be done in straight lines from the bulb outward. Circular rubbing leaves fine lines which break up the beam of light, whereas rubbing straight from the bulb outward leaves lines parallel to the rays of light, which do not interfere with the reflection.

2. Headlamp Bulbs

Headlamp bulbs for Cadillac and La Salle cars have two filaments, one above the other, instead of the customary single filament. The filaments are located in different positions with respect to the focus of the parabolic reflector, and the beam of light from one filament is projected at a different angle from the other.

When the switch lever is in one position one set of filaments is lighted and the beams are projected straight ahead, illuminating the road at a distance. When the switch lever is in the other position, the other filaments are lighted and the beams are projected down at an angle, illuminating more brightly the road directly in front of the car.



Fig. 1
Lighting switch at bottom of steering gear. Cadillac 341-A and LaSalle 303

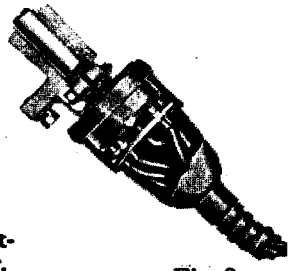

Fig. 2
Lighting switch at bottom of steering gear. Cadillac 341-B and LaSalle 328

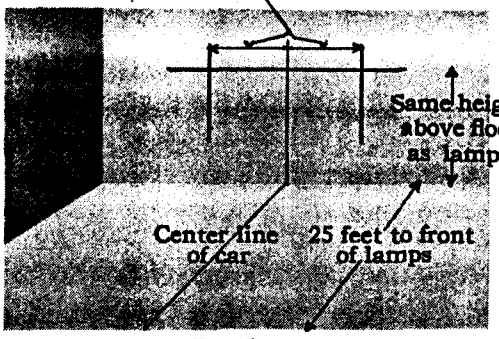

Fig. 5
Markings for adjustment of head lamps

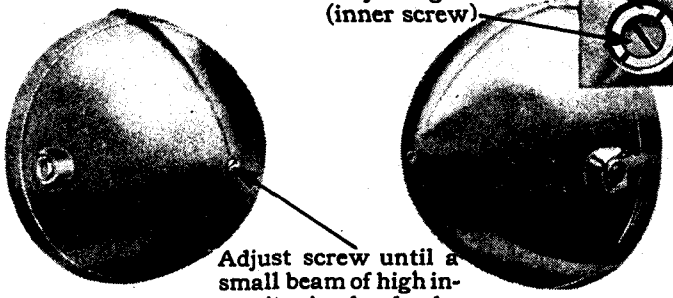

Fig. 3
Head lamp adjusting screw. Cadillac 341-A and B; LaSalle 303, second type, and 328

Fig. 4
Head lamp adjusting screws. LaSalle 303, first type

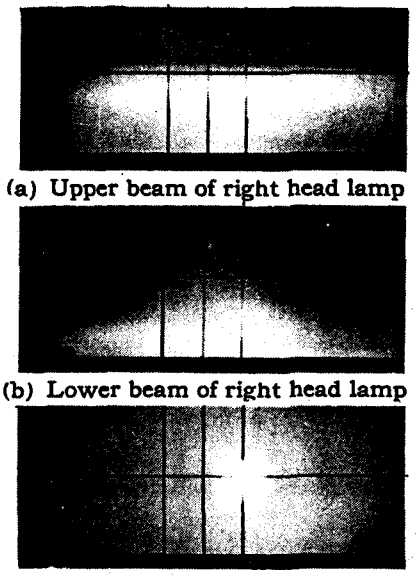

(a) Upper beam of right head lamp

(b) Lower beam of right head lamp

(c) Upper beam with lens removed

Fig. 6
Light beams with lamp properly focused and aimed. Cadillac 341-A and B; LaSalle 303, second type, and 328. After adjusting one head lamp, repeat adjustment on other lamp

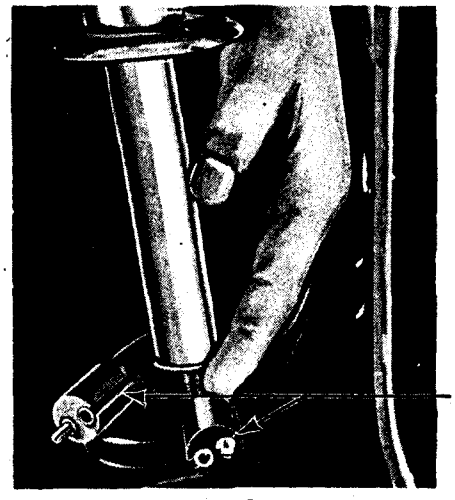

Fig. 8
Disconnecting wires on LaSalle 328 head lamp. Slotted coupling plugs used only on Cadillac 341-B and LaSalle 328. Coupling plugs are at top of conduits on Cadillac 341-A and B

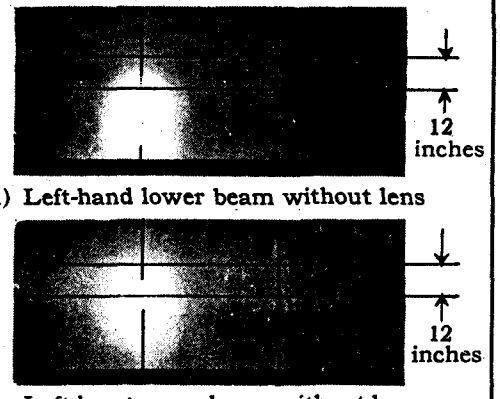

(a) Left-hand lower beam without lens

(b) Left-hand upper beam without lens

Fig. 7
Light beams with lamp properly focused and aimed. LaSalle 303 with first-type head lamp. After adjusting one lamp, repeat adjustment on other lamp

Plate 45. Lighting system details.

Lubrication

Subject	Cadillac 341		LaSalle 303-328		Specifications	Remarks
Oil pressure, engine	A	B	303	328	7-10 lbs. at idling speed	
Kerosene, for thinning—					Temperature / Per Cent Kerosene	
Gear lubricant	A	B	303	328	20° to -10° 10; -10° to -30° 25; Below -30° 40	See note 1.
CAPACITIES						
Engine	A	B	303	328	8 qts.	See chart below for recommendations.
Fan	A	B	303	328	¼ pint, approximately	
Rear axle	A	B	....	....	2½ qts.	
	...	...	303	328	3 qts.	
Transmission	A	B	....	328	2½ qts.	
	...	...	303	....	1½ qts.	
LUBRICANTS						See lubrication diagrams pages 84, 85, 86 and 87, for points where lubricants are to be used. See note 2.
Chassis grease	A	B	303	328	G11 (A-200 plus 5% calcium soap)	
Engine oil	A	B	303	328		See chart below.
Gear lubricant	A	B	303	328	A-200 (viscosity 200 secs, at 210°)	See note 1.
Spring lubricant	A	B	303	328	G-9 (petroleum jelly)	
Water pump grease	A	B	303	328	G-5 (calcium soap grease, consistency 82-145)	
Wheel bearing grease	A	B	303	328	G-2½ (calcium soap grease, consistency 250-315)	

ENGINE OIL RECOMMENDATIONS

Type of Service	Summer	Winter		
	All Temperatures Above 32° F.	Between 32° and 15° Above	Between 15° Above and 15° Below Zero	Below 15° Below Zero
Average Driving (No prolonged high speed driving)	S. A. E. viscosity 40 or 50	S. A. E. viscosity 20	S. A. E. viscosity 10 or S. A. E. viscosity 20 thinned with 1 qt. kerosene to 7 qts. oil	S. A. E. viscosity 10 thinned with 1 qt. kerosene to 7 qts. oil or S. A. E. viscosity 20 thinned with 2 qts. kerosene to 6 qts. oil
	These oils are *not* suitable for prolonged high speed driving. Change to oil shown below before starting on long trip at speeds above 45 m. p. h.			
Prolonged High Speed Driving	Cadillac Approved "Heavy Duty" Oils—Summer and Winter These are oils having an *S. A. E.* viscosity of 50—60 which are required to meet certain specifications as to volatility in order to demonstrate their fitness for prolonged high speed driving. NOTE: Approved lubricants vary in their suitability for winter use. If an oil with a high pour test is used in winter and the car is not kept in a heated garage, add from one to two quarts of kerosene after a long drive at high speed before the car is stored for the night. Also when draining the crankcase, add from one to two quarts of kerosene to the fresh oil, unless starting immediately on a long trip at high speeds.			

1. Thinning Gear Lubricant with Kerosene

Gear lubricant for the transmission and differential need be thinned only at the beginning of cold weather if a sufficient quantity of kerosene is added to take care of the lowest expected temperature. The lubricant for the steering gear should not be thinned.

The steering gear should be lubricated the year round with A-200 lubricant, to which 5% Acheson No. 38 graphite may be added. It is very important that only Acheson No. 38 be used. This particular product is a very fine powdered graphite, and no other powdered graphite on the market is similar to it. Acheson Graphite may be procured direct from the Acheson Graphite Corporation Niagara Falls, New York.

2. Special Items for Lubrication Diagrams

The following items cannot be placed on the regular 1000-mile schedule, so they should be performed at the recommended intervals.

Every day—Check level of liquid in radiator.

Every week—Check tire pressure.

When cold weather starts—Thin engine oil with kerosene to permit easier cranking. Also thin lubricant in rear axle and transmission.

At beginning of warm weather—Drain thinned lubricant and replace with fresh lubricant.

Once each season—Remove spring covers (if used) and repack with petroleum jelly.

Every 12000 miles—Check level of special oil in shock absorbers.

Every 12000 miles—Replace oil filter cartridge. Remove and clean engine oil pan and screen at same time.

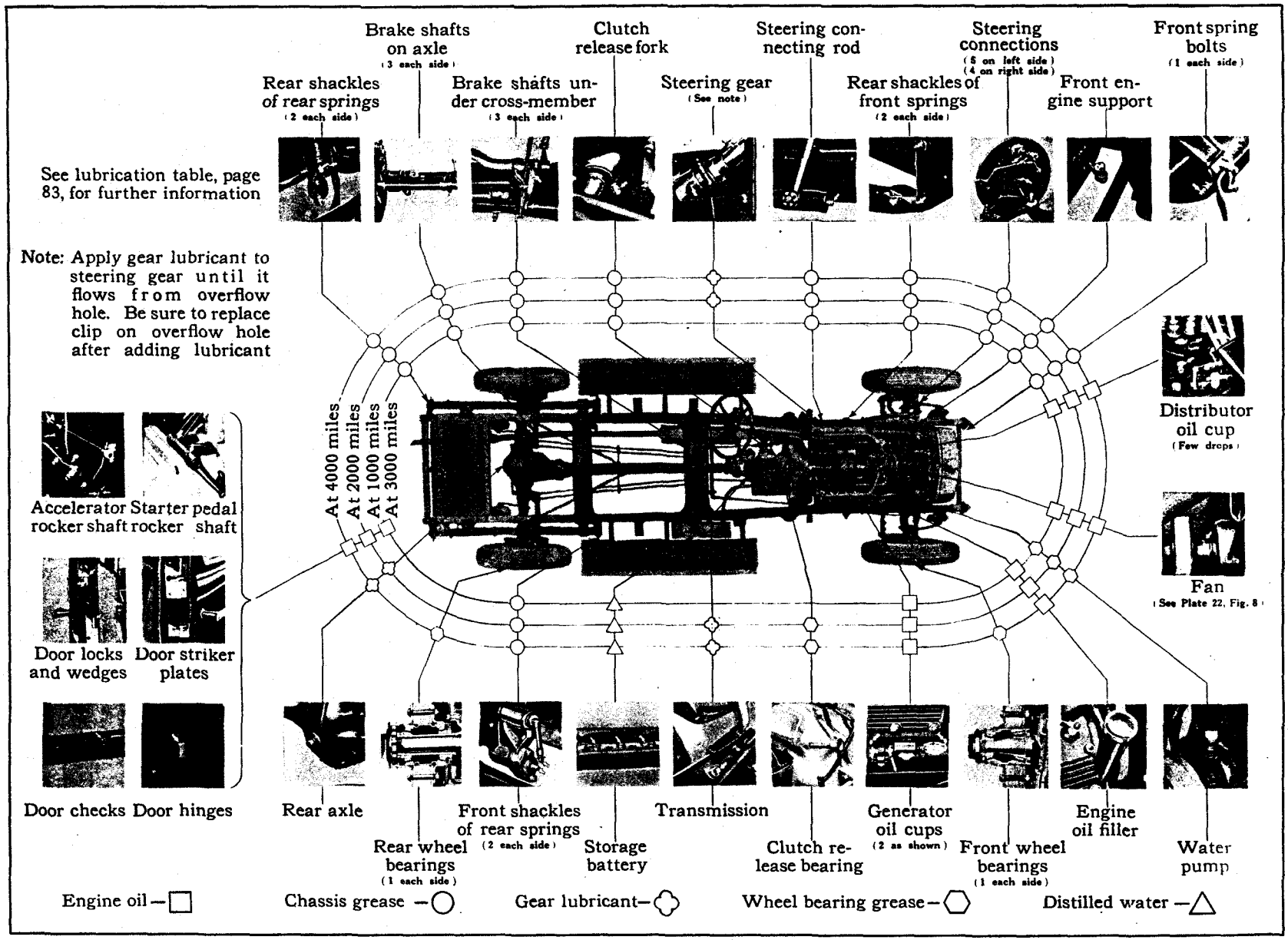

Plate 46. Lubrication diagram, Cadillac 341-B.

February, 1929

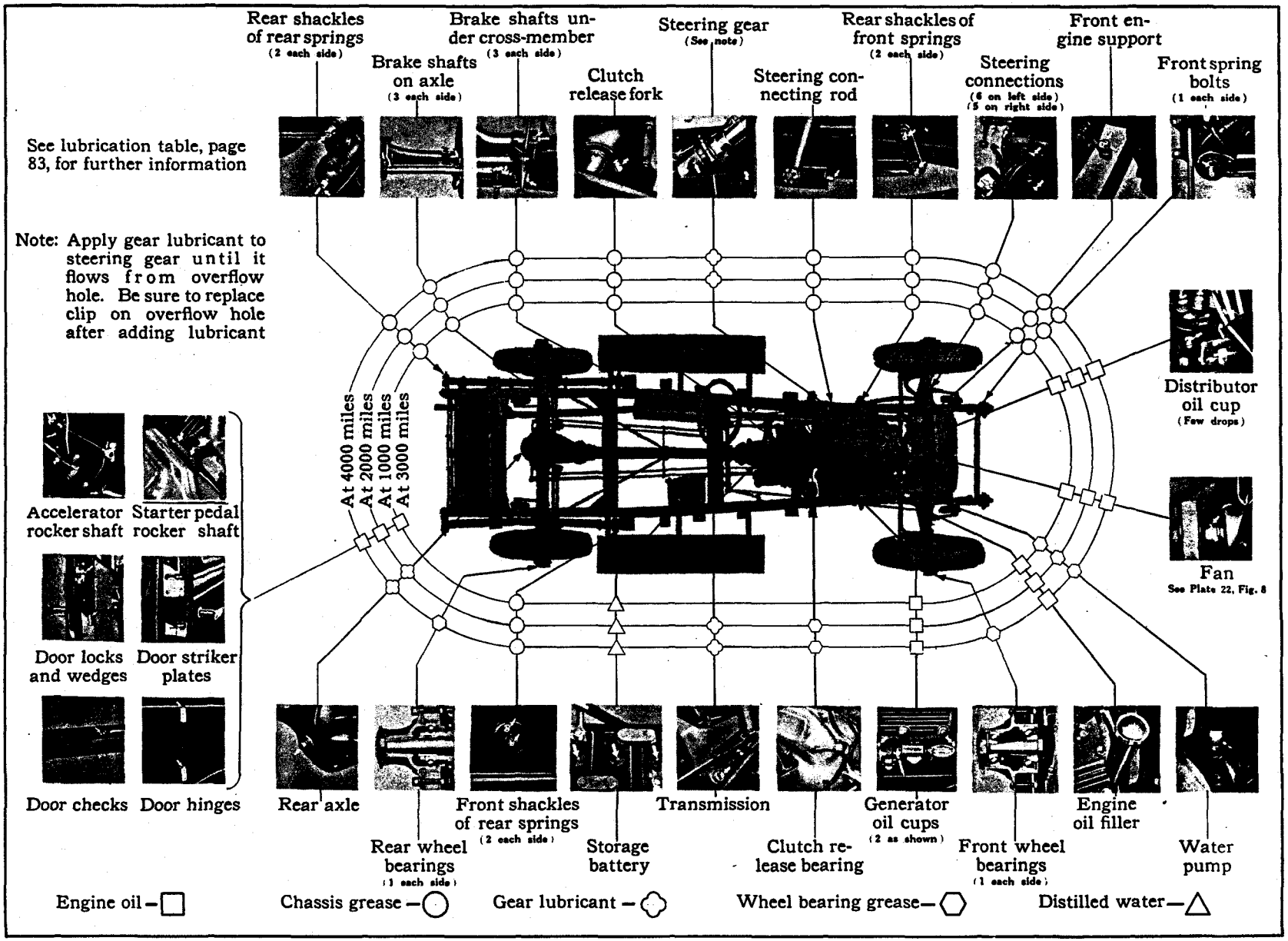

Plate 47. Lubrication diagram, La Salle 328.

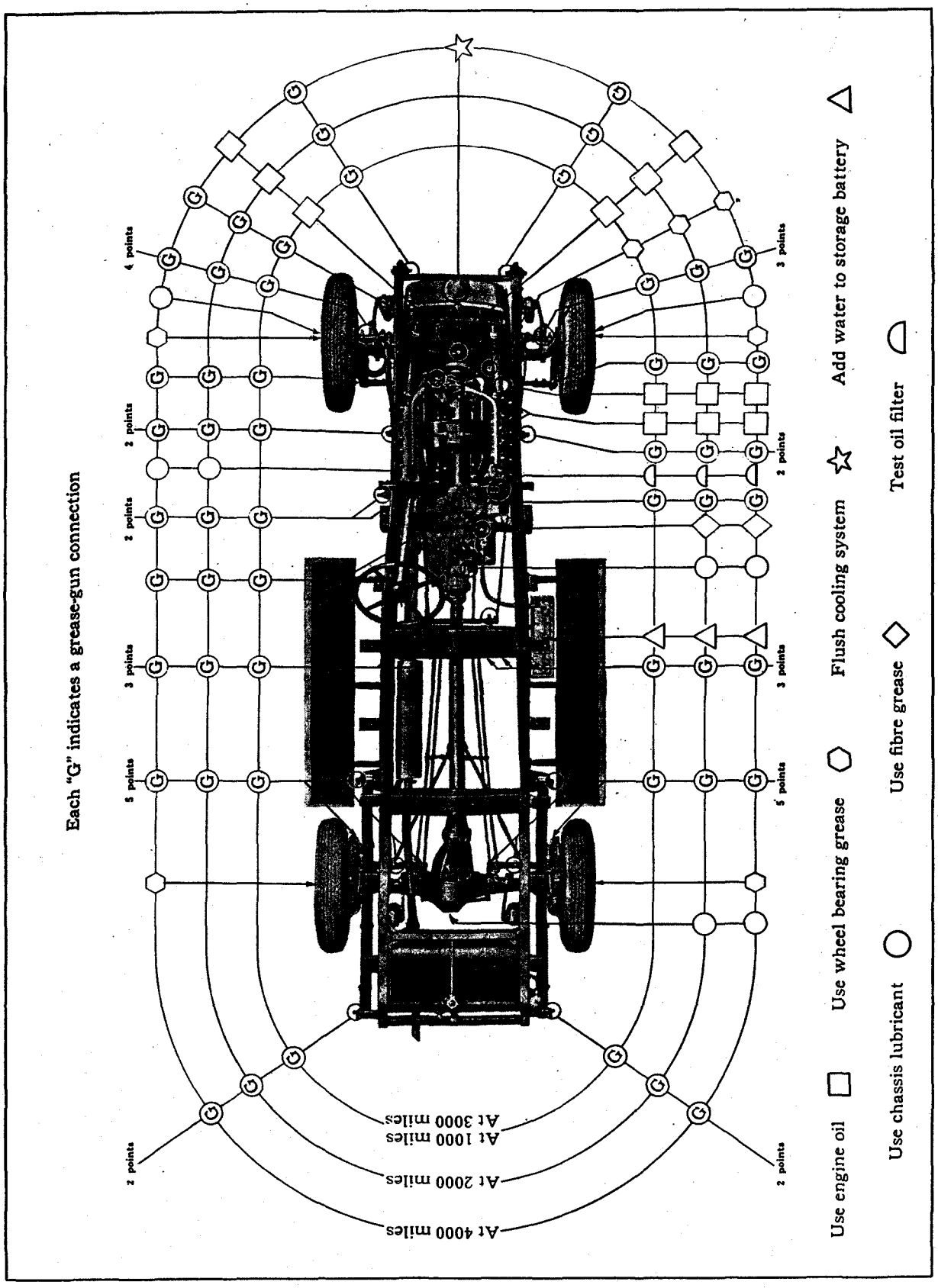

Plate 48. Chassis lubrication diagram, Cadillac 341-A.

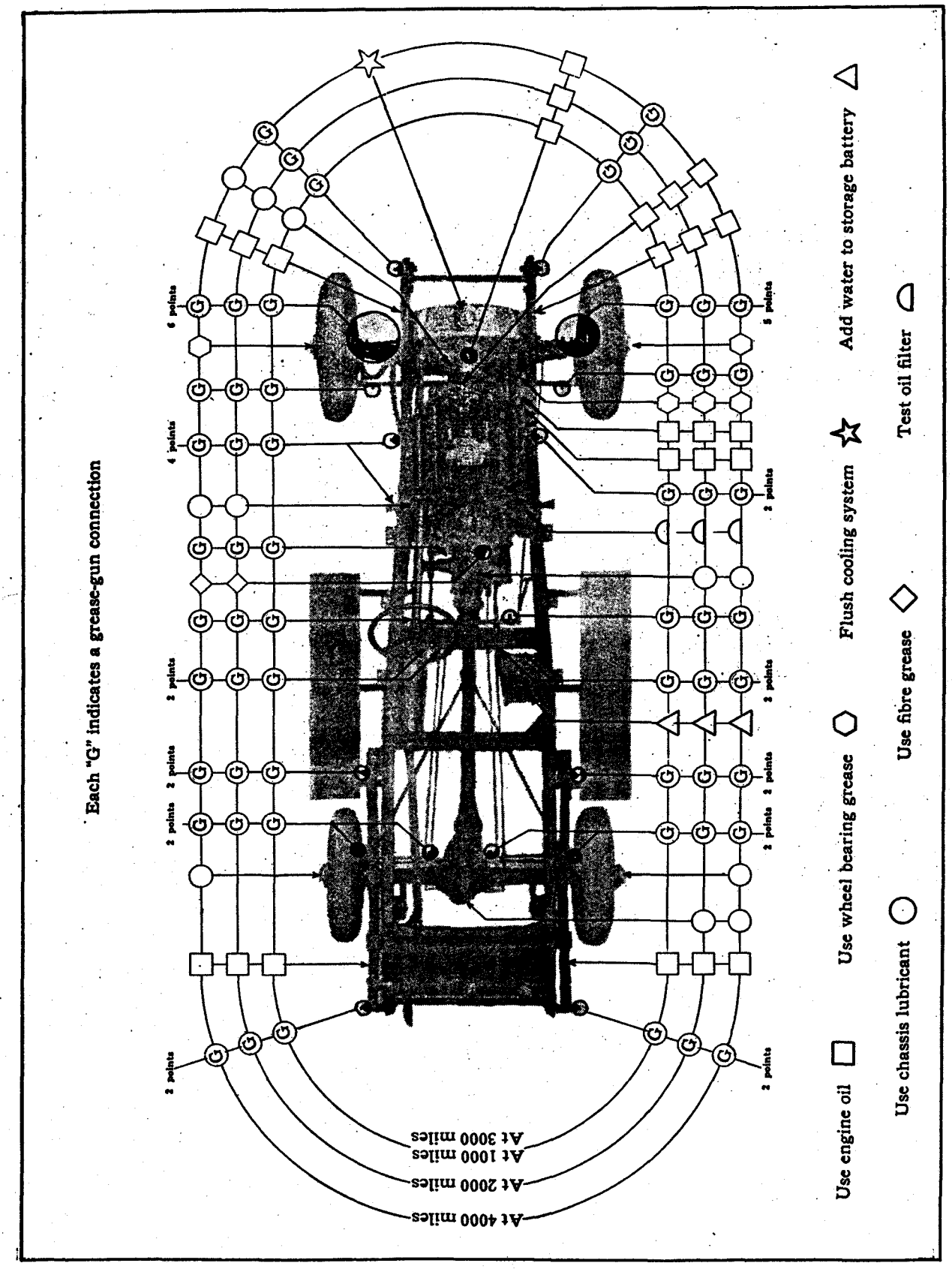

Plate 49. Chassis lubrication diagram, La Salle 303.

Springs and Shock Absorbers

Subject	Cadillac 341		LaSalle 303-328		Specifications	Remarks
SPRINGS						
Bolts, diameter of spring	A	B	303	328	.747-.748 in.	
Clearance between bolts and bushings	A	B	303	328	New limits, .001-.004 in. Worn limit, not over .006 in.	
Leaves, Number of—						
Front	A	...	....	....	10 Part No. 878718	
	...	B	....	....	10 Part No. 878719	Before chassis unit 3-22101 and beginning with chassis unit 3-25101.
					11 Part No. 878721	Beginning with chassis unit 3-22101 and before chassis unit 3-25101.
	...	...	303[1]	....	8 Part No. 875915 R.H. 8 Part No. 875916 L.H.	Before chassis unit 2-15200
	...	...	303[2]	328	9 Part No. 875917 R.H. 9 Part No. 875918 L.H.	303: Beginning with chassis unit 2-15200. 328: Before chassis unit 4-00383.
	...	...	....	328	9 Part No. 871543 R.H. 9 Part No. 871544 L.H.	Beginning with chassis unit 4-00383.
Rear, standard	A	...	....	....	9 Part No. 878709	2-pass. cars.
	A	B	....	....	9 Part No. 878710	341-A: 4-pass. cars. 341-B: 2-pass. and 4-pass. cars.
	A	B	....	....	9 Part No. 878712	5-pass. cars.
	A	B	....	....	10 Part No. 878713	7-pass. cars.
	...	...	303[1]	....	8 Part No. 875872	2-pass. cars.
	...	...	303[1]	....	9 Part No. 875871	4-pass. cars (Except Town Sedan)
	...	...	303[1]	....	10 Part No. 875870	5-pass. cars and Town Sedan.
	...	...	303[1]	....	10 Part No. 875874	7-pass. cars.
	...	...	303[2]	....	8 Part No. 875871	2-pass. cars.
	...	...	303[2]	328	9 Part No. 875876	303: 4-pass. cars (Except Town Sedan) 328: 2-pass. Roadster. 2-pass. Coupe and Convertible Coupe before chassis unit 4-11035 and beginning with chassis unit 4-11678. 4-pass. Phaeton and Sport Phaeton before chassis unit 4-3875.
	...	...	303[2]	328	10 Part No. 875873	303: 5-pass. cars and Town Sedan. 328: 2-pass. Coupe and Convertible Coupe, beginning with chassis unit 4-11035 and before chassis unit 4-11678. 4-pass. Phaeton and Sport Phaeton, beginning with chassis unit 4-3875. 5-pass. Coupe. All other 5-pass. cars before chassis unit 4-3869.
	...	...	303[2]	328	11 Part No. 875877	303: 7-pass. cars. 328: 5-pass. cars beginning with chassis unit 4-3869 (except 5-pass. Coupe). 7-pass. cars before chassis unit 4-2970.
	...	...	....	328	11 Part No. 871600	7-pass. cars beginning with chassis unit 4-2971.

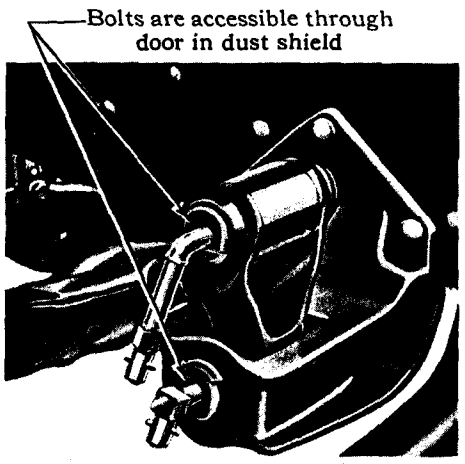

Fig. 1
Rear spring front shackle.
Cadillac 341-A

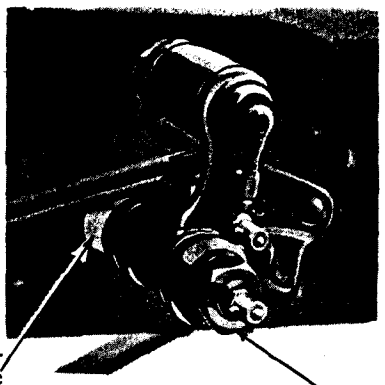

Fig. 2
Rear spring front shackle.
LaSalle 303 and 328

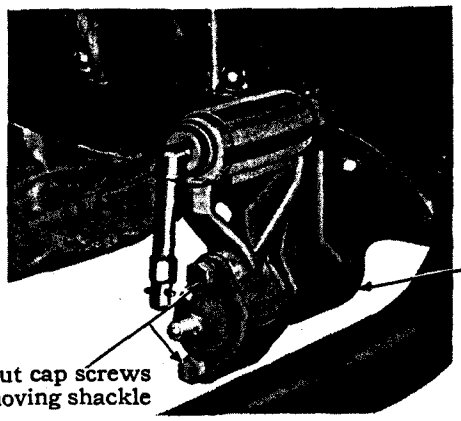

Fig. 3
Rear spring front shackle.
Cadillac 341-B

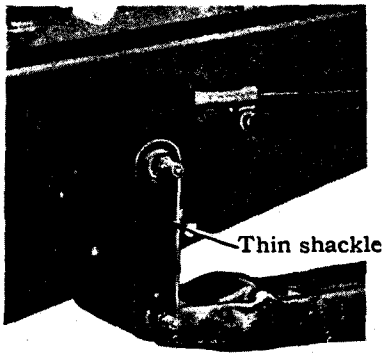

Fig. 4
Front spring rear shackle
Cadillac 341-B

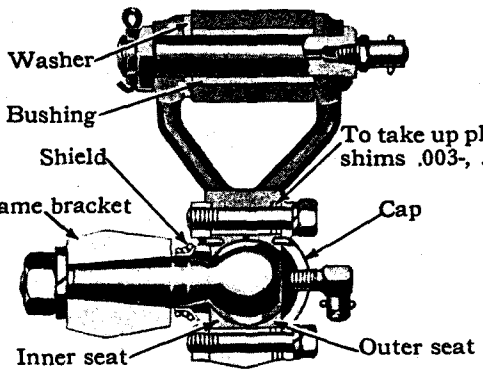

Fig. 5
Sectional view of rear spring shackle
Cadillac and LaSalle

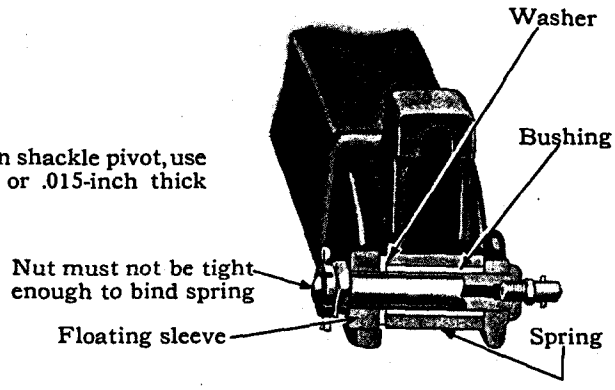

Fig. 6
Sectional view of front spring shackle.
Cadillac and LaSalle

Plate 50. Cadillac and La Salle spring shackles.

Subject	Cadillac 341		LaSalle 303-328		Specifications				Remarks
Rear, special heavy	A	...	....	....	9	Part No. 878710			2-pass. cars.
	A	...	....	....	9	Part No. 878712			4-pass. cars.
	A	B	....	....	10	Part No. 878713			341-A: 5-pass. cars. 341-B: 2-pass. and 4-pass. cars.
	A	...	....	....	10	Part No. 878715			7-pass. cars.
	...	B	....	....	10	Part No. 878714			5-pass. cars.
	...	B	....	....	10	Part No. 878716			7-pass. cars.
	...	...	303[1]	....	10	Part No. 875870			2-pass. and 4-pass. cars (except Town Sedan).
	...	...	303[1]	....	10	Part No. 875874			5-pass. cars and Town Sedan.
	...	...	303[1]	....	10	Part No. 875875			7-pass. cars.
	...	...	303[2]	328	11	Part No. 875877			303: 2-pass. and 4-pass. cars (except Town Sedan). 328: 2-pass. and 4-pass. cars.
	...	...	303[2]	328	12	Part No. 875878			303: 5-pass. cars and Town Sedan. 328: 5-pass. cars.
	...	...	303[2]	328	12	Part No. 875879			7-pass. cars.
Length, center to center—									See Note 1.
Front	A	B	....	....	42 in.				Spring in loaded position.
	...	...	303	328	39 in.				
Rear	A	B	....	....	60 in.				
	...	...	303	328	58 in.				
Width—									
Front	A	B	....	....	2¼ in.				
	...	...	303	328	2 in.				
Rear	A	B	....	....	2⅛ in.				
	...	...	303	328	2 in.				
SHOCK ABSORBERS									
Metering pins for two-way Lovejoys—					Style	Part No.	Location		See Note 2.
Present standard equipment for average speeds on paved city streets and good country roads									
All body styles	...	B	....	328[2]	EX	829325	Front		Bumper pins.
					EX	829325	Rear		
	...	B	....	328[2]	8X	829323	Front		Rebound pins
					9X	829324	Rear		
High driving speeds on average roads.									
All body styles	...	B	....	328[2]	CX	828425	Front		Bumper pins
					CX	828425	Rear		
	...	B	....	328[2]	6X	828426	Front		Rebound pins
					7X	828427	Rear		
Speeds of 45 to 50 M. P. H. on rough roads and open ditches									
All body styles	...	B	....	328[2]	AX	826776	Front		Bumper pins
					AX	826776	Rear		
	...	B	....	328[2]	3X	827260	Front		Rebound pins
					4X	827261	Rear		
Speeds of 50 M. P. H. and up on rough roads and open ditches.									
All body styles with special heavy rear springs	...	B	....	328[2]	AX	826776	Front		Bumper pins
					BX	828197	Rear		

Subject	Cadillac 341		LaSalle 303-328		Specifications			Remarks
All 2-pass. cars and 4 and 7-pass. Phaeton cars with special heavy rear springs	...	B	....	....	5X 1X	827262 828196	Front Rear	Rebound pins
All 4 and 5-pass. Cadillac Coupes, 5 and 7-pass. Cadillac Sedans and La Salle 328 cars, with special heavy rear springs	...	B	....	328[2]	3X 1X	827260 828196	Front Rear	Rebound pin

1. Special Heavy Rear Springs

The standard rear springs with which Cadillac and LaSalle cars are equipped are designed to give the best riding qualities under the road conditions which predominate where the greatest number of cars are used. Special heavy rear springs to prevent bottoming at high speed on rough roads are supplied by the Parts Division as listed in the table.

The special heavy springs have 1½ inches more arch than the standard springs. To compensate for this, special rear shock absorber equipment is necessary on cars equipped with special heavy springs.

In the absence of these special heavy rear springs, the standard rear springs can be stiffened by inserting extra leaves. Two extra leaves are recommended and these should be duplicates of the No. 3 leaf. When using extra leaves, it is necessary to use special length alignment clips and center bolts.

When using special heavy rear springs, it is also necessary to use longer clips to fasten the springs on the axle.

2. Metering Pins for Two-way Lovejoys

The metering pin equipment in two-way Lovejoy Shock Absorbers must be changed for different road conditions because it is impossible to secure ideal riding on all kinds of roads with the same metering pins. In each case, it is necessary to determine what sort of driving prevails and change the metering pins accordingly.

The present factory standard equipment for all body styles, on both Cadillac and LaSalle cars, is EX bumper pins, and 8X and 9X rebound pins on the front and rear shock absorbers, respectively. This equipment is standard because paved city streets and good country roads predominate.

Bumper pins are used in the bumper cylinder which is on the side of the shock absorber away from the lever.

Rebound pins are used in the rebound cylinder which is on the side of the shock absorber toward the lever.

Two-way Lovejoys are supplied as special equipment for first type LaSalle 328 cars.

Steering Gear

Subject	Cadillac 341		LaSalle 303-328		Specifications	Remarks
Angle of column—						
Closed cars	A	...	303	....	42° 10′	
	...	B	....	....	42° 25′	
	...	...	....	328	44° 28′	
Open cars	A[1]	...	....	....	40°	
	A[2]	...	....	....	40° 55′	
	...	...	303	....	42° 10′	
	...	B	....	....	41° 10′	
	...	...	....	328	42° 15′	
Clearance between steering tube (worm shaft) and bushings	A	B	303	328	.002—.004 in.	
Clearance between sector shaft and eccentric bushing	A	B	303	328	.001—.003 in.	
Diameter of steering wheel	A	B	....	....	19 in.	
	...	...	303	328	18 in.	
Ratio	A	...	....	....	16 to 1	Ratio of degrees movement of steering wheel to degrees movement of front wheel spindle.
	...	B	....	....	14.95 to 1	
	...	...	303	....	17.5 to 1	
	...	...	....	328	16.15 to 1	
Steering connecting rod-springs						
Free length	A	B	303	328	1 in.	
Compression	A	B	303	328	325—400 lbs. compressed to ⅞ in.	
Turning radius, left	A	B	....	....	25 ft.— 1 in.	Radius of circle swept by outside wall of tire. W. B.—Wheelbase.
	...	...	303	328	20 ft.— 8 in., 125 in. W. B.	
	...	...	....	....	22 ft.—10 in., 134 in. W. B.	
Turning radius, right	A	B	....	....	23 ft.— 0 in.	
	...	...	303	328	19 ft.— 7 in., 125 in. W. B.	
	...	...	....	....	21 ft.—½ in., 134 in W. B.	
Unit number, location of	A	B	303	328	Top face of steering gear housing, all models	

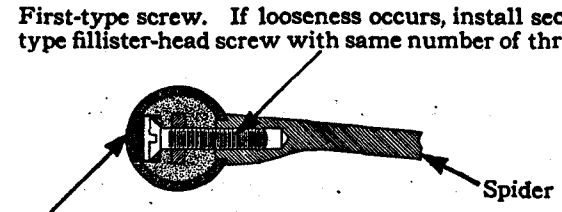

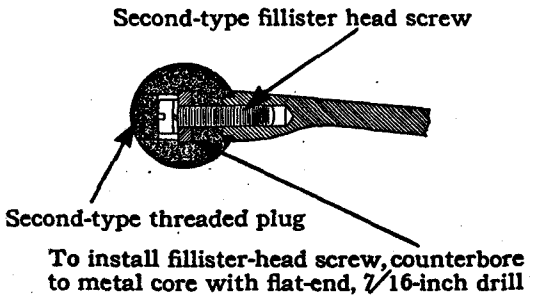

Fig. 2
Sectional view of steering wheel rim

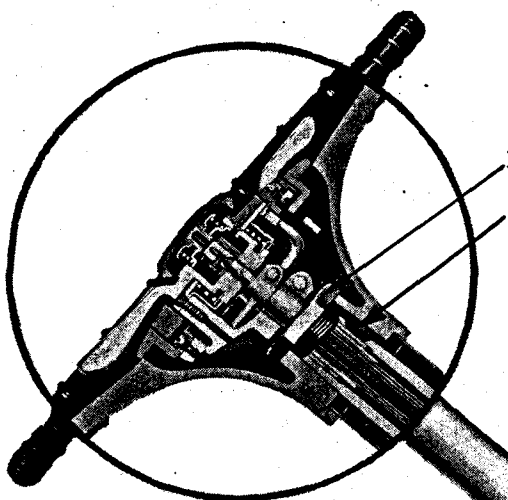

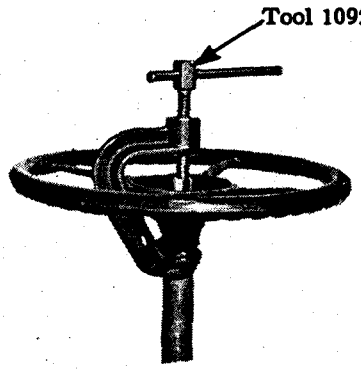

Fig. 3
Steering wheel puller

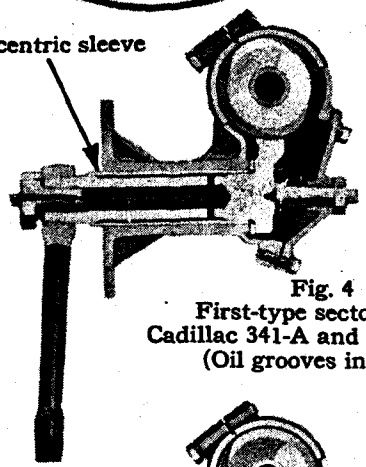

Fig. 4
First-type sector shaft.
Cadillac 341-A and LaSalle 303
(Oil grooves in shaft)

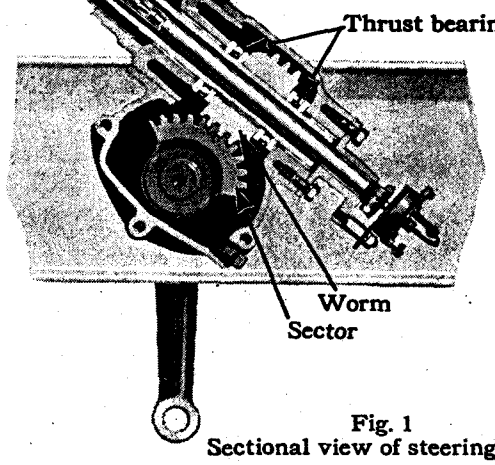

Fig. 1
Sectional view of steering gear

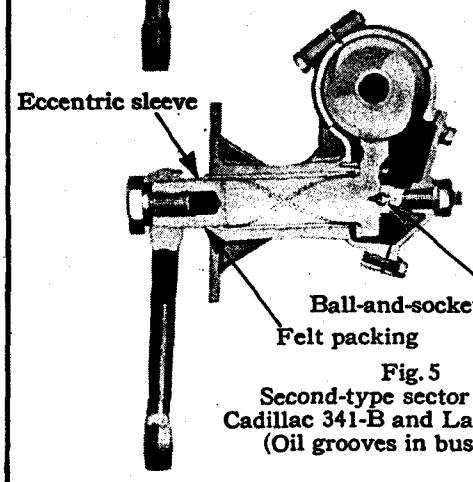

Fig. 5
Second-type sector shaft.
Cadillac 341-B and LaSalle 328
(Oil grooves in bushing)

Plate 51. Steering gear details.

Note: Adjustment of steering connections, knuckle bolts and wheel bearings, inspection of steering cross rod and connecting rod springs, and checking caster and alignment of front wheels should precede adjustment of steering gear. Remove steering connecting rod before adjusting steering gear

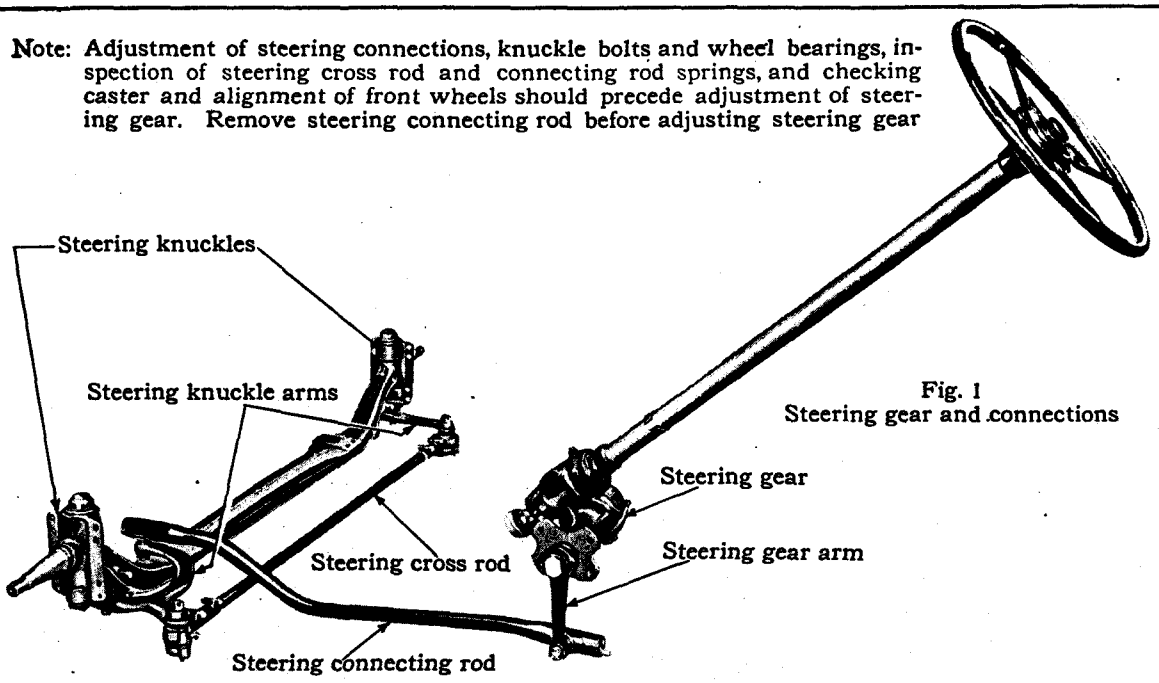

Fig. 1
Steering gear and connections

1. Back worm adjusting nut off slightly

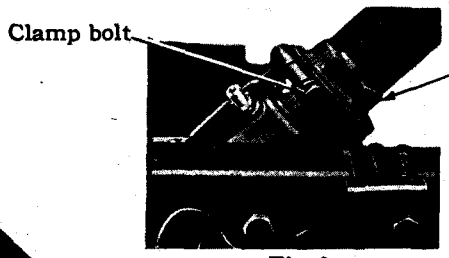

Fig. 2
Adjustment for end play in worm

2. Turn eccentric bushing with locking wrench to move sector slightly away from worm

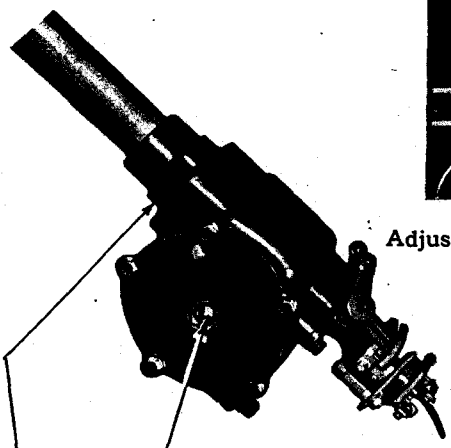

Fig. 3
Adjustment for end play in sector shaft

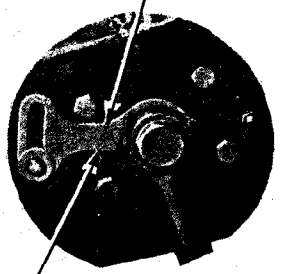

Fig. 4
Eccentric bushing adjustment

3. Turn adjusting screw in against sector until all play is taken up and slight binding is felt when turning steering wheel; then back off just enough to free adjustment. Move steering wheel back and forth while making this adjustment in order to insure alignment of swivel on sector adjusting screw

4. Turn worm adjusting nut down until all play is taken up and slight binding is felt when turning steering wheel; then back off just enough to free adjustment

5. Move locking wrench to move sector toward worm until all backlash is taken up and slight binding is felt when turning steering wheel; then back off just enough to free adjustment on high point of sector

Note: If front wheels do not point straight ahead when worm is on high point of sector, change position of steering arm on sector shaft

Plate 52. Steering gear adjustments and steering connections.

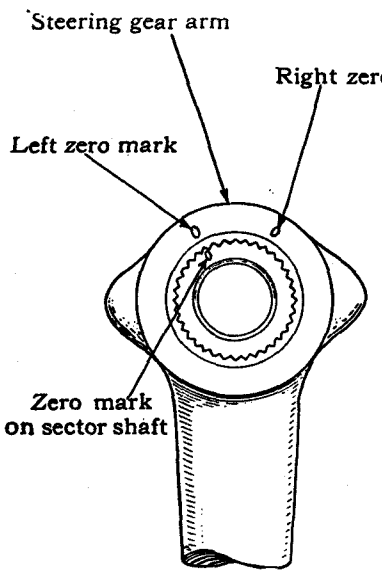

Fig. 1
Zero marks on steering gear arm and sector shaft (left-hand steering)
Zero mark on arm must line up with zero mark on shaft to insure getting worm on high point of sector. On cars with left-hand steering, use left zero mark; on cars with right-hand steering, use right zero mark

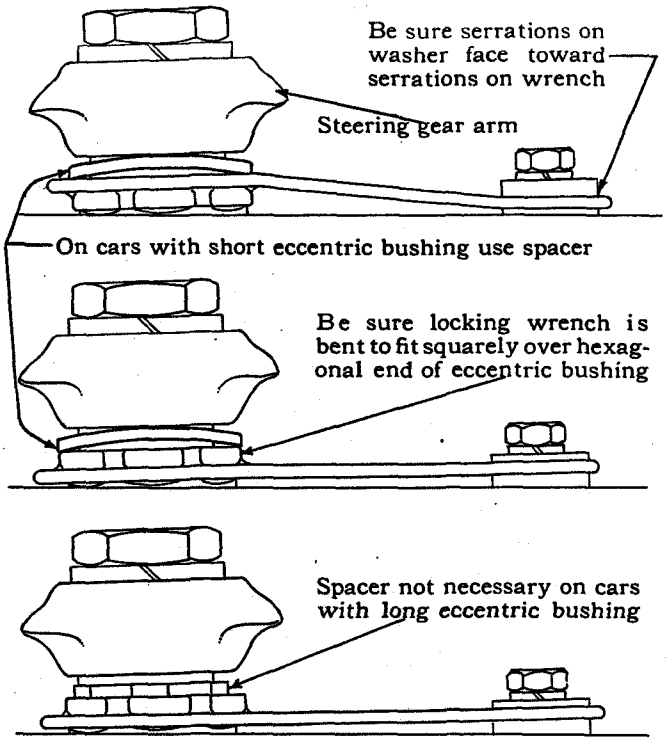

Fig. 2
Views showing installation of locking wrench on hexagonal end of eccentric bushing

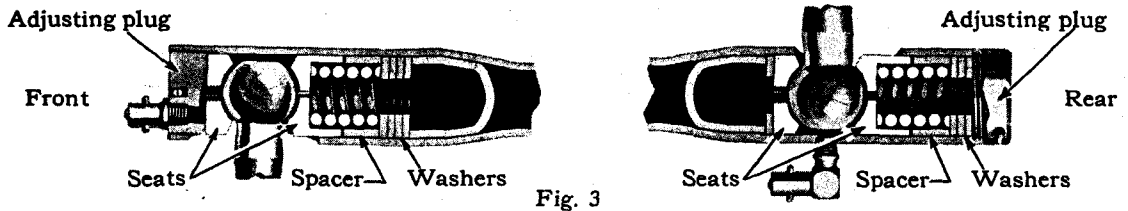

Fig. 3
Sectional view of steering connecting rod. Cadillac 341-A and B

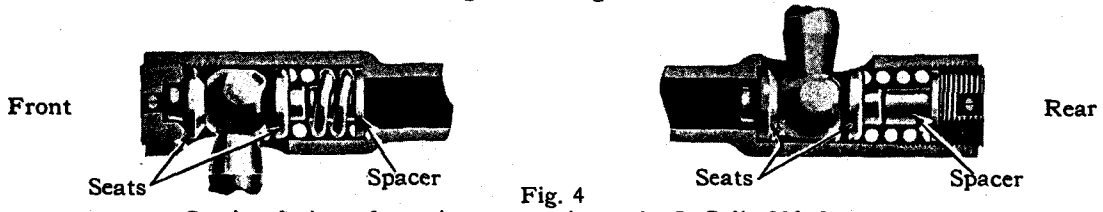

Fig. 4
Sectional view of steering connecting rod. LaSalle 303, first type

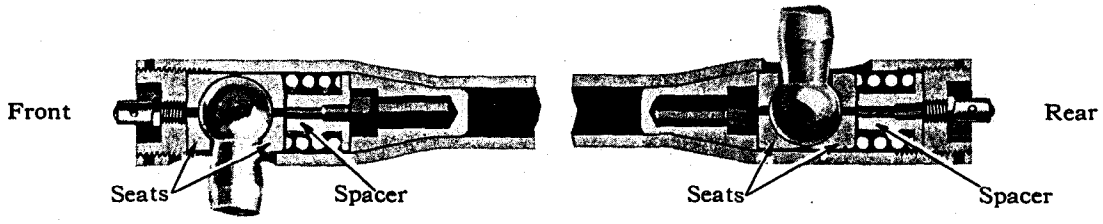

Fig. 5
Sectional view of steering connecting rod. LaSalle 303, second type, and 328

Plate 52A. Steering gear adjustments and steering connections.

Transmission and Universal Joint

Subject	Cadillac 341		LaSalle 303-328		Specifications	Remarks
TRANSMISSION						
Gear ratio, low gear	A	B	303	328	3.125 to 1	
Gear ratio, second gear	A	B	303	328	1.705 to 1	
Gear ratio, high gear	A	B	303	328	1 to 1 (Direct drive)	
Gear ratio, reverse gear	A	B	303	328	3.745 to 1	
Lubricant	A	B	303	328	Chassis lubricant A-200	
Lubricant, amount required	A	B	303	328		See capacities under Lubrication Table, Page 83.
Unit number, location	A	B	303	328	On center of left flange next to flywheel housing	
JACKSHAFT GEAR ASSY						
End play of gear unit	A	...	...	...	New limits, .001-.009 in. Worn limit, not over .015 in.	
	...	...	303	...	New limits, .012-.022 in. Worn limit, not over .025 in.	
	...	B	...	328	New limits, .001-.011 in. Worn limit, not over .025 in.	
Play in jackshaft bearings	A	B	303	328	Worn limit, not over .007 in.	
MAIN SHAFT ASSEMBLY						
Clearance between second speed gear and bushing	...	B	...	328	New limits, .002-.004 in. Worn limit, not over .006 in.	
Clearance between splines on main shaft and splineways of bushing in second speed gear	...	B	...	328	New limits, .001-.005 in. Worn limit, not over .008 in.	
Clearance between splines on main shaft and splineways in shifter gears	A	B	303	328	New limits, .001-.003 in. Worn limit, not over .005 in.	In 341-B and 328 cars, these limits apply only to low-and-reverse shifter gear.
Clearance between splines on main shaft and splineways in sliding gear coupling	...	B	...	328	New limits, .001-.003 in. Worn limit, not over .005 in.	
Clutch connection shaft, out of true	A	B	303	328	Not over .0025 in.	
End play between clutch connection shaft and main shaft	...	B	...	328	New limits, .001-.012 in. Worn limit, not over .020 in.	
End play in clutch connection shaft rear bearing	A	...	303	...	Not over .015 in.	
End play in main shaft rear bearing	A	...	303	...	Not over .015 in.	
Main shaft, out of true	A	B	303	328	Not over .0025 in.	
Shake between clutch connection shaft and main shaft	A	B	303	328	Not over .006 in.	
REVERSE PINION GEAR ASSEMBLY						
Clearance between reverse pinion shaft and bushing	A	B	303	328	New limits, .001-.003 in. Worn limit, not over .004 in.	

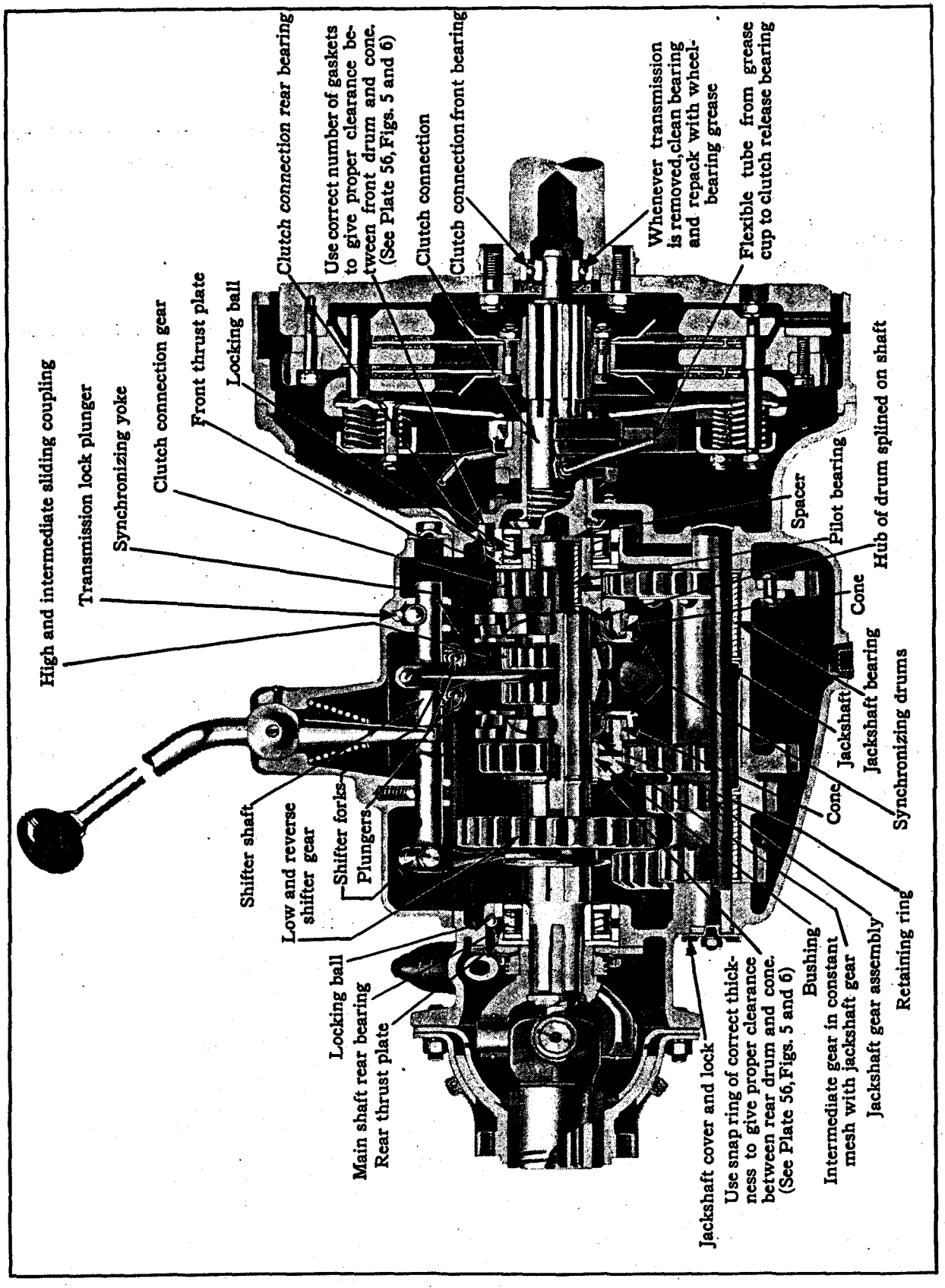

Plate 53. Sectional view of transmission, Cadillac 341-B and La Salle 328.

Subject	Cadillac 341		LaSalle 303-328		Specifications	Remarks
End play in reverse pinion	A	...	303	....	New limits, .010-.022 in. Worn limit, not over .025 in.	
	...	B	....	328	Worn limit, not over .025 in.	
Reaming size for reverse pinion bushing	A	B	303	328	.937-.938 in.	
SHIFTING MECHANISM						
Clearance between shifter fork and shifter gear	A	...	303	....	New limits, .010-.017 in. Worn limit, not over .025 in.	
	...	B	....	328	New limits, .020-.027 in. Worn limit, not over .035 in.	
Shifter shaft lock spring, free length	A	...	....	....	1 11/32 in., approximately	
	...	...	303	....	1 11/32 in., approximately	
	...	B	....	328	1 3/16 in., approximately	
Shifter shaft lock spring, compression	A	...	....	....	24-26 lbs. at 1 in.	
	...	...	303	....	24-26 lbs. at 1 1/4 in.	
	...	B	....	328	20-23 lbs. at 3/4 in.	
YOKE ASSEMBLY						
Clearance between guide block and drum	...	B	....	328	New limits, .002-.006 in. Worn limit, not over .010 in.	
Clearance between plunger and yoke bore	...	B	....	328	New limits, .001-.003 in. Worn limit, not over .005 in.	
Plunger main spring, free length	...	B	....	328	1 1/4 in., approximately	
Plunger main spring, compression	...	B	....	328	24-26 lbs. at 1 1/2 in.	
Plunger valve spring, free length	...	B	....	328	5/8 in., approximately	
Plunger valve spring, compression	...	B	....	328	2 3/4-3 1/4 lbs. at 7/16 in.	
Yoke return springs, free length	...	B	....	328	1 1/8 in., approximately	
Yoke return springs, compression	...	B	....	328	14-16 lbs. at 41/64 in.	
Yoke throw from neutral to applied position	...	B	....	328	New limits, 3/32-5/32 in. Worn limit, not over 1/4 in.	Measured at top of transmission case, *Plate 56, Fig. 5.*
SPEEDOMETER GEARS 32 x 6.75 (7.00/20) TIRES					Driving Gear No. of Teeth / Driven Gear No. of Teeth	See notes 1, 2, 3 and 4 Part Number / Rolling radius
4.39:1 gear ratio	A	...	....	....	7 / 21	878207 / 878208 ..... 14 1/2 to 15 3/16 in.
	...	B	....	....	7 / 21	848176 / 848123
	A	...	....	....	7 / 20	878207 / 877088 ..... 15 3/16 to 15 11/16 in.
	...	B	....	....	7 / 20	848176 / 848122
	A	...	....	....	7 / 19	878207 / 878209 ..... 15 11/16 to 16 3/4 in.
	...	B	....	....	7 / 19	848176 / 848178

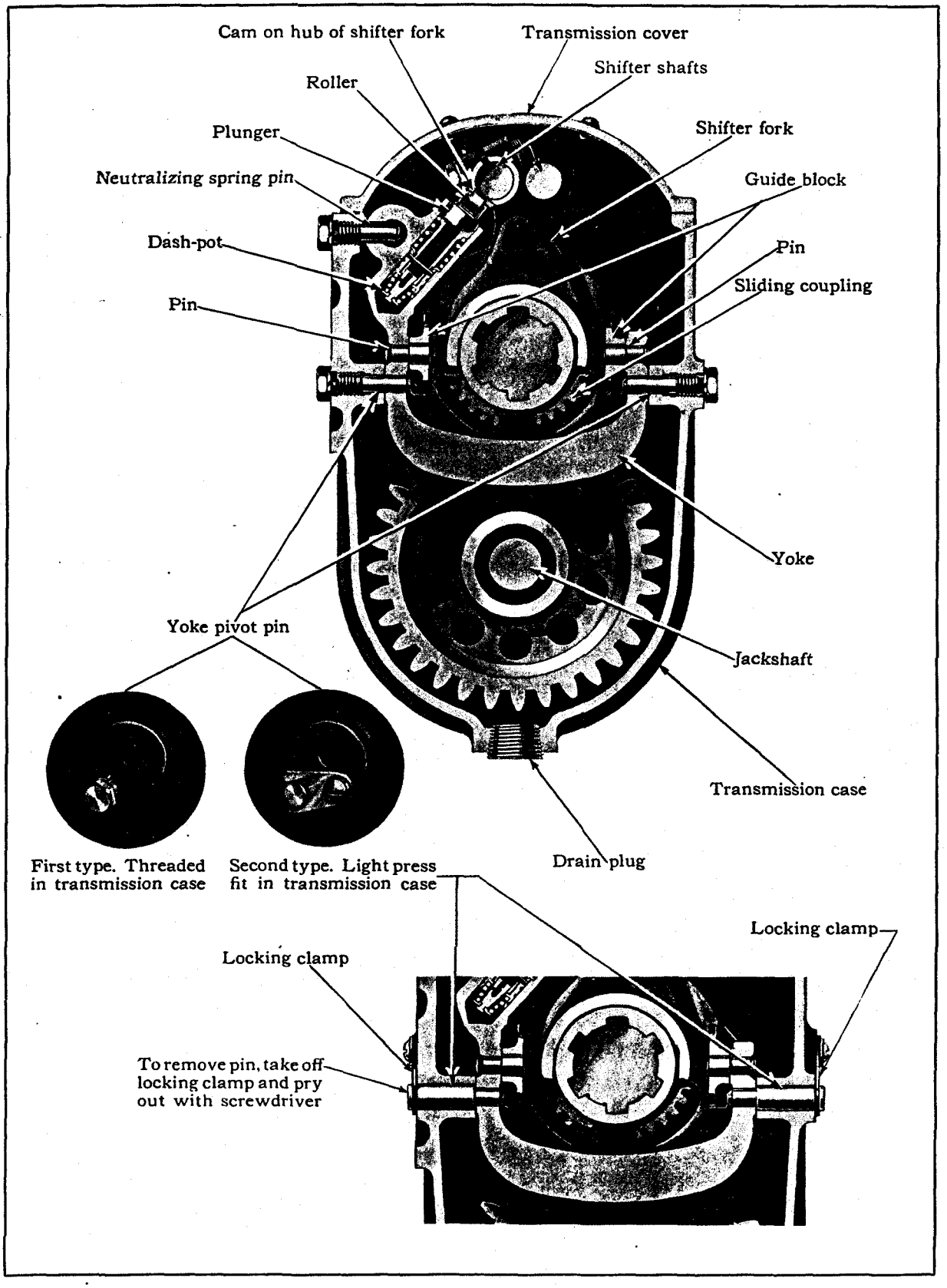

Plate 54. Cross-sectional view of transmission, Cadillac 341-B and La Salle 328.

February, 1929

Subject	Cadillac 341		LaSalle 303-328		Specifications		Remarks	
					Driving Gear No. of Teeth	Driven Gear No. of Teeth	See notes 1, 2, 3 and 4 Part Number	Rolling radius
4.75:1 gear ratio	A	...	...	...	7	22	878207 876259	14⅝ to 15⅜ in.
	...	B	...	...	7	22	848176 848124	
	A	...	...	...	7	21	878207 878208	15⅜ to 16¼ in.
	...	B	...	...	7	21	848176 848123	
5.08:1 gear ratio	...	B	...	...	7	23	848176 848125	15⅛ to 15¾ in.
	A	...	...	...	7	22	878207 876259	15¾ to 16 1/16 in.
	...	B	...	...	7	22	848176 848124	
32 x 6.20 (6.30/20) TIRES								
4.17:1 gear ratio	...	...	303	...	7	18	876267 876351	15⅜ to 16¼ in.
	...	...	303[1]	...		18	876374	
	...	...	303[2]	...				
4.54:1 gear ratio	...	...	303	...	7	20	874375 877088	15 5/16 to 16 5/16 in.
4.916:1 gear ratio	...	...	303	...	7	22	874375 876226	16 5/16 to 16 in.
	...	...	303[1]	...		22	876259	See note 1.
	...	...	303[2]	...				
32 x 6.00 (6.00/20) TIRES								
4.07:1 gear ratio	...	...	303	...	7	18	874375 876351	15⅜ to 16¼ in.
	...	...	303[1]	...		18	876374	
	...	...	303[2]	...				
4.54:1 gear ratio	...	...	303	...	7	21	874375 874374	14 13/16 to 15 5/16 in.
	...	...	303[1]	...		21	876258	See note 1.
	...	...	303[2]	...				
4.916:1 gear ratio	...	...	303	...	7	22	874375 876226	15 5/16 to 16 in.
	...	...	303[1]	...		22	876259	See note 1.
	...	...	303[2]	...				
	...	...	303	...	7	21	874375 874374	16 to 16¾ in.
	...	...	303[1]	...		21	876258	See note 1.
	...	...	303[2]	...				
31 x 6.20 (6.50/19) TIRES								
4.07:1 gear ratio	...	...	...	328	7	18	848170 876374	15 5/16 to 16 in.
	...	...	...	328	7	19	848176 848178	14⅝ to 15⅜ in.
	...	...	...	328	7	18	848176 876374	15⅜ to 16¼ in. See note 3.
4.54:1 gear ratio	...	...	...	328	7	21	848176 848123	14 13/16 to 15 5/16 in.
	...	...	...	328	7	20	848176 848122	15 5/16 to 16 5/16 in. See note 3.

Subject	Cadillac 341		LaSalle 303-328		Specifications		Remarks	
					Driving Gear No of Teeth	Driven Gear No of Teeth	See notes 1, 2, 3 and 4 Part Number	Rolling Radius
4.916:1 gear ratio	...	...	....	328	7	23	848176 848125	14¾ to 15 1/16 in.
	...	...	....	328	7	22	848176 848124	15 1/16 to 16 in. See note 3.
UNIVERSAL JOINT								
Ball and socket joint, adjustment	A	B	303	328	Remove gaskets until friction can be felt in joint, then add one gasket			
Ball member bushing, assembly	A	B	303	328	Oil grooves must cross on right side and open toward top and bottom of ball			
Clearance between crosses and bushings	A	B	303	328	New limits, .0025-.004 in. Worn limit, not over .006 in.			
Clearance between yoke and ball member bushing	A	B	303	328	New limits, .005-.007 in. Worn limit, not over .010 in.			

1. Speedometer Drive and Driven Gears

Two types of driven gears are listed for LaSalle 303 cars. The first type gears (874374-876226) are for transmissions before unit 2-5781, and the second type gears (876258-876259) are for transmissions after this unit number.

Beginning with transmission unit 2-5781, the speedometer cable is smaller in diameter, so that a gear with a smaller hole is required.

All driving gears have seven teeth but differ in lead and pitch. Driven gears with 18 and 22 teeth give slightly fast readings with 32 x 6.00 tires and slightly slow readings with 32 x 6.20 tires.

2. Installation of Cable Flange

On 341-A and 303 cars the distance between the centers of the driving gear and driven gear is the same for all combinations. On 341-B and 328 cars, two different center distances are used, one for pinions with 16 to 19 teeth and one for pinions with 20 to 23 teeth. In order to make this possible, the end of the speedometer cable is eccentric. In one position, the cable gives the correct center distance for pinions with 16 to 19 teeth. When revolved 180° the cable gives the correct center distance for pinions with 20 to 23 teeth. The flange of the cable end has the figures "16-19" on one side and "20-23" on the other side. The cable should always be turned so that the figures corresponding to the number of teeth on the pinion are on top.

3. United States Tires with Narrow Face

Driven gears 876374, 848122 and 848124 are for use only on La Salle 328 cars when narrow tread United States Tires are used.

4. Determining Correct Speedometer Gear by Rolling Radius

There are occasionally owners who desire to install on their cars tires of a different make from standard, or tires of special sizes. Any change in the make or sizes of the tires affects the speedometer reading and, in many cases, a new speedometer gear will be necessary.

It is impossible to specify the correct gear merely from the nominal size of the tire. Tires of various makes differ. It is necessary to know the "rolling radius" in order to determine the correct speedometer gear.

To find the rolling radius of any tire, simply measure the distance from the center of the hub cap of a rear wheel to the pavement.

Before doing this, however, make sure that the tires are inflated to the normal pressure of 40 pounds and that the car is weighed down to its normal load.

Once the rolling radius is known, the correct gear can be determined by referring to the specification table.

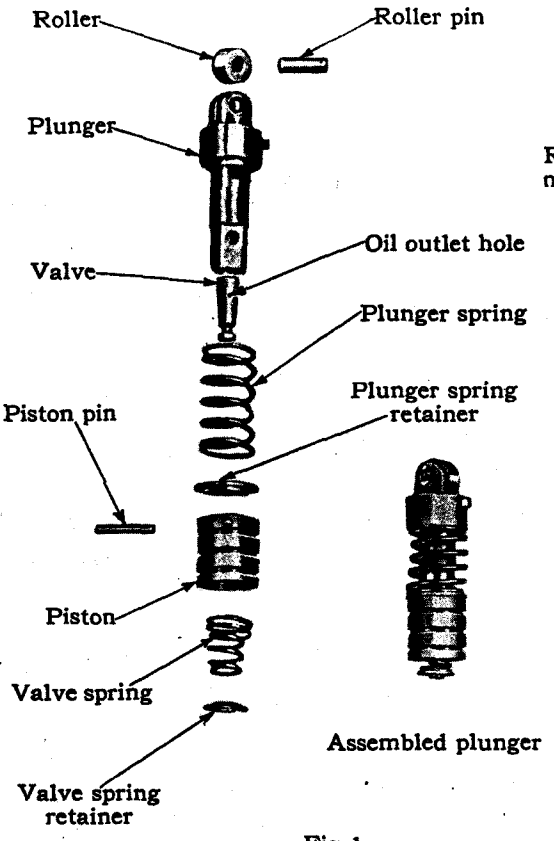

Fig. 1
Plunger unit

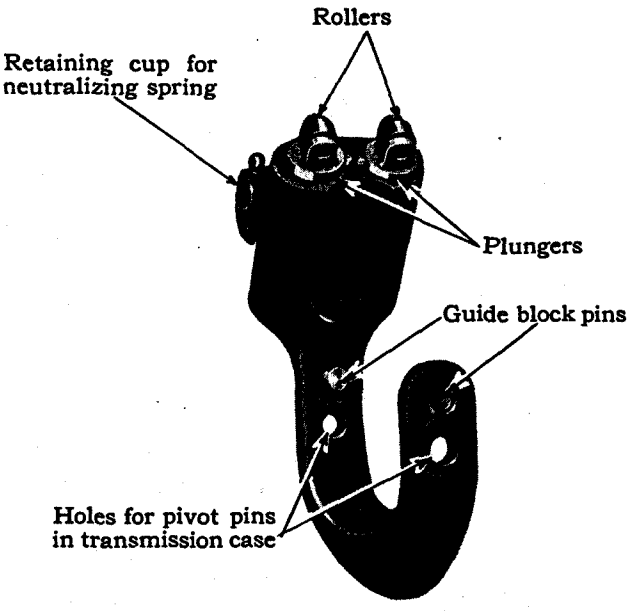

Fig. 2
Yoke assembly

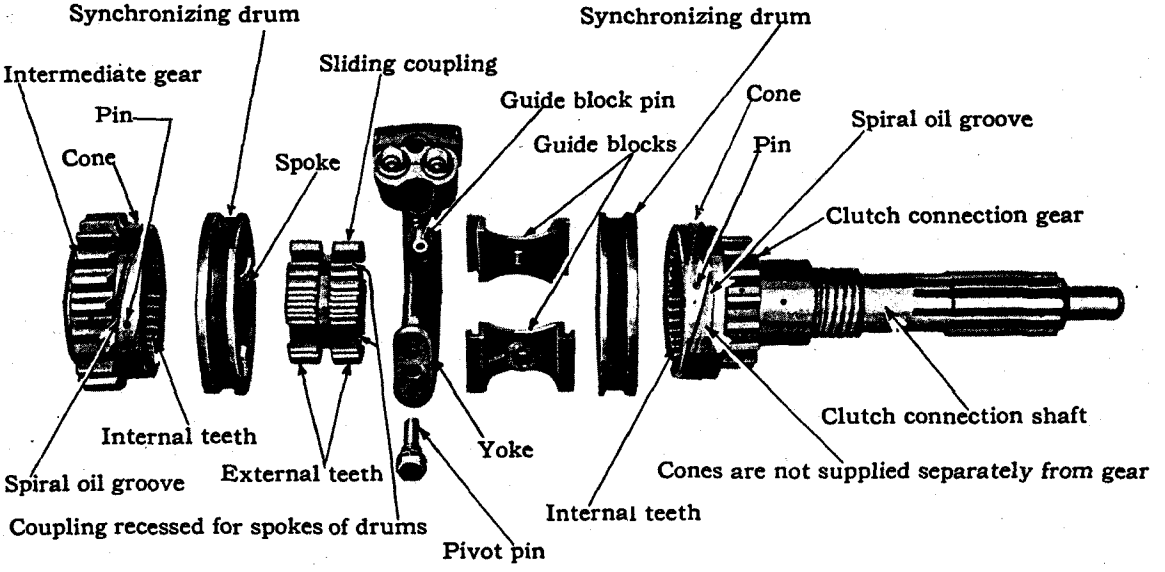

Fig. 3
Exploded view of synchronizing mechanism

Plate 54A. Transmission synchronizing mechanism.

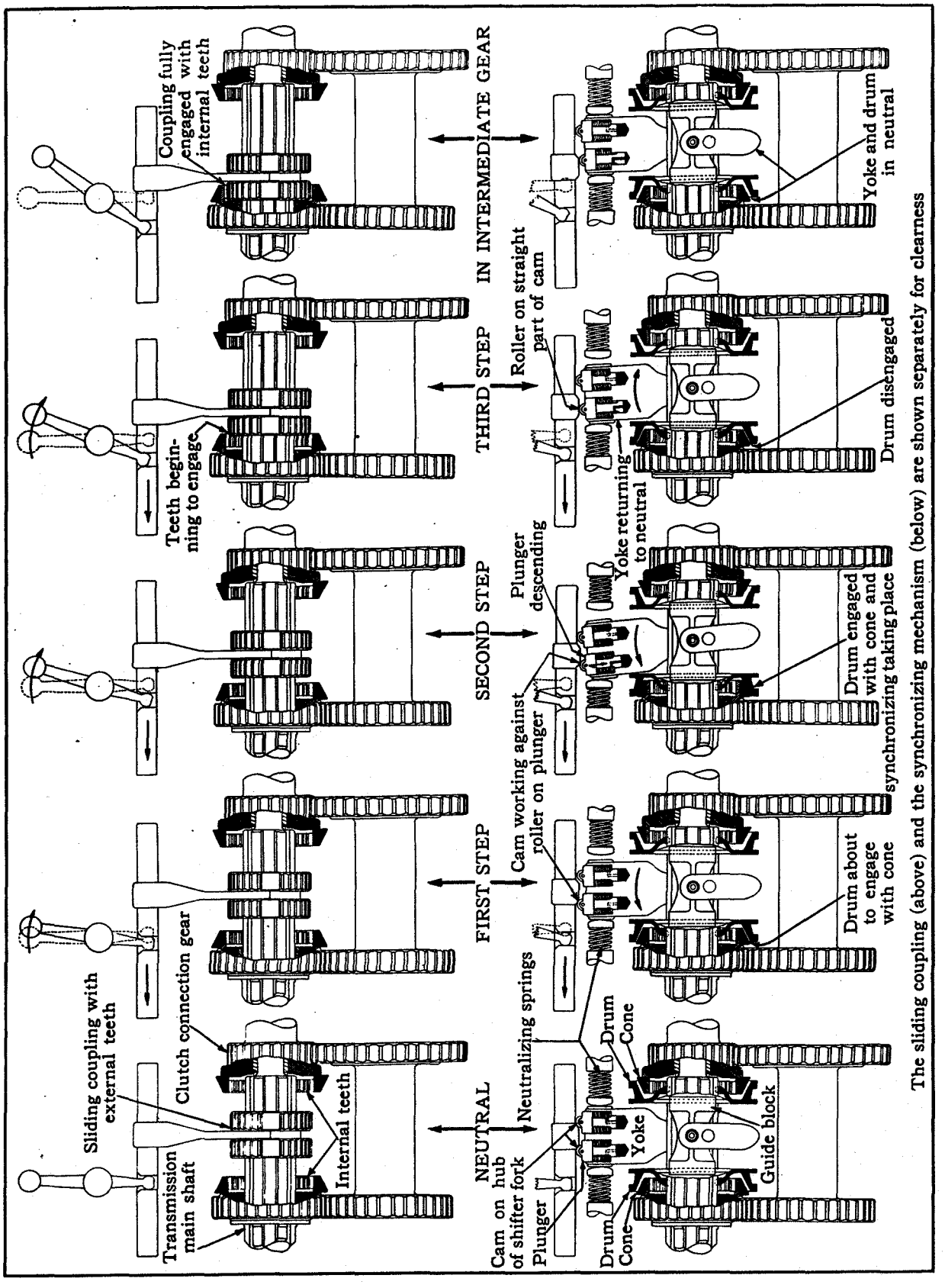

Plate 55. Diagrams showing operation of synchronizing mechanism. (Neutral to intermediate).

Figs. 1 to 4
Sectional views of synchronizing yoke showing action of dash-pot plungers

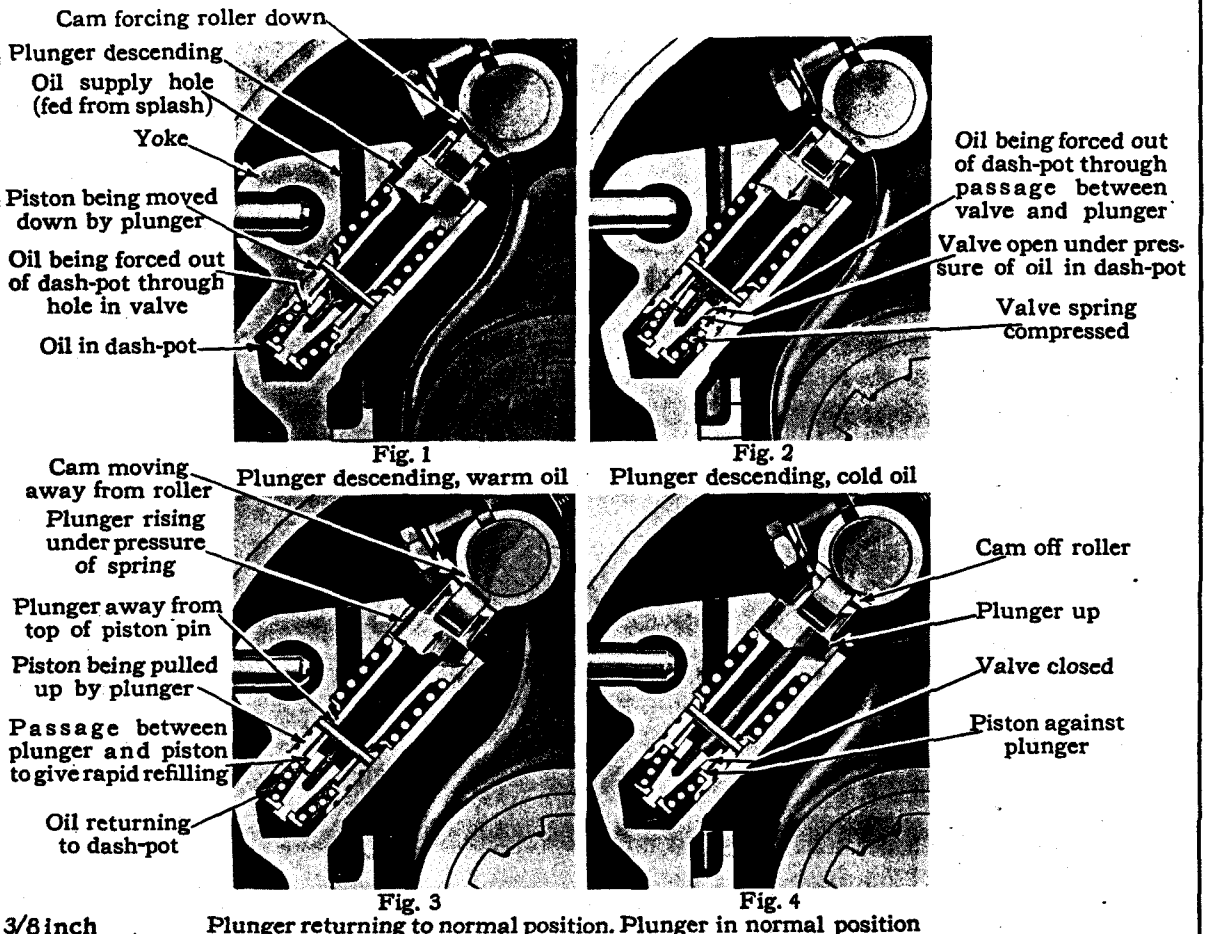

Fig. 1 Plunger descending, warm oil

Fig. 2 Plunger descending, cold oil

Fig. 3 Plunger returning to normal position. Dash-pot refilling

Fig. 4 Plunger in normal position

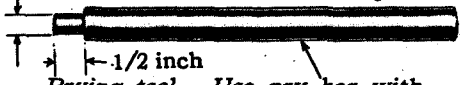

Prying tool. Use pry bar with shoulder to prevent burring edges of oil supply hole. Use just enough pressure to engage drum with cone

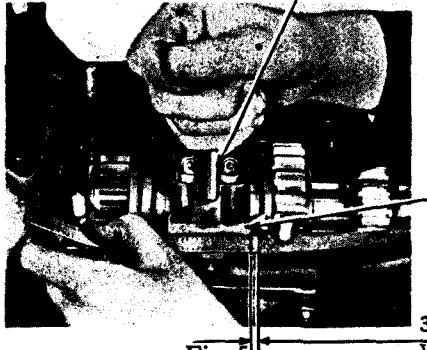

Fig. 5 Measuring travel of yoke to determine clearance between front drum and cone. Repeat in opposite direction for rear drum

Clearance determined by number of gaskets under clutch connection rear-bearing cap. Measured as shown in Fig. 5

Clearance determined by thickness of snap ring in bushing. Measured as shown in Fig. 5

Measure movement of yoke from neutral to extreme positions

3/32—5/32-inch travel either way from neutral position

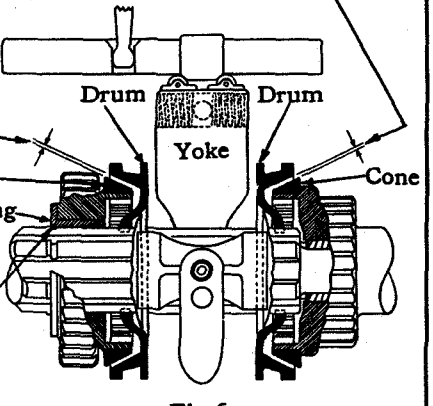

Fig. 6 Clearance between drum and cone. Adjustment necessary only when installing new parts

Plate 56. Dash pot operation and drum clearances.

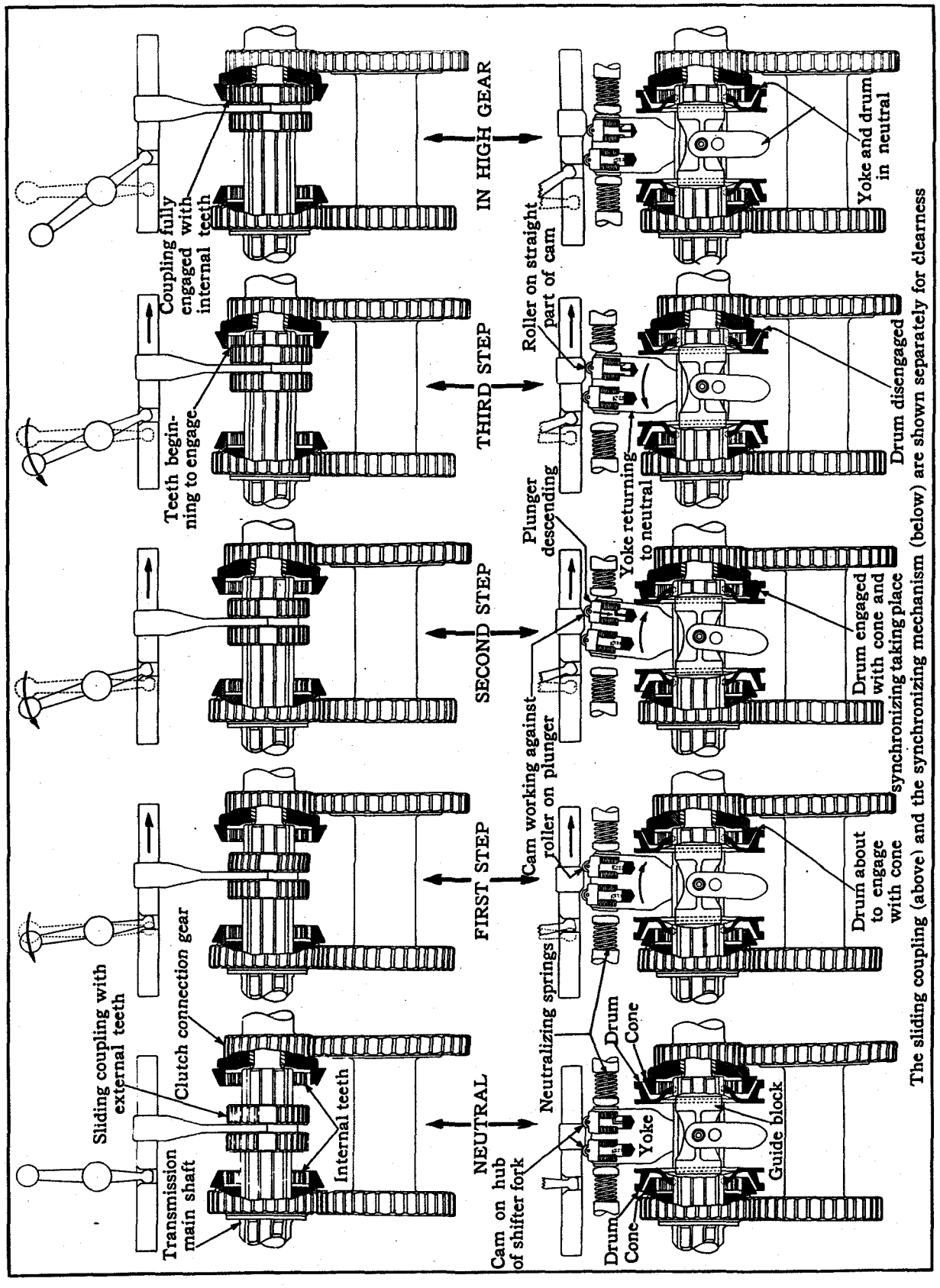

Plate 57. Diagrams showing operation of synchronizing mechanism. (Neutral to direct drive).

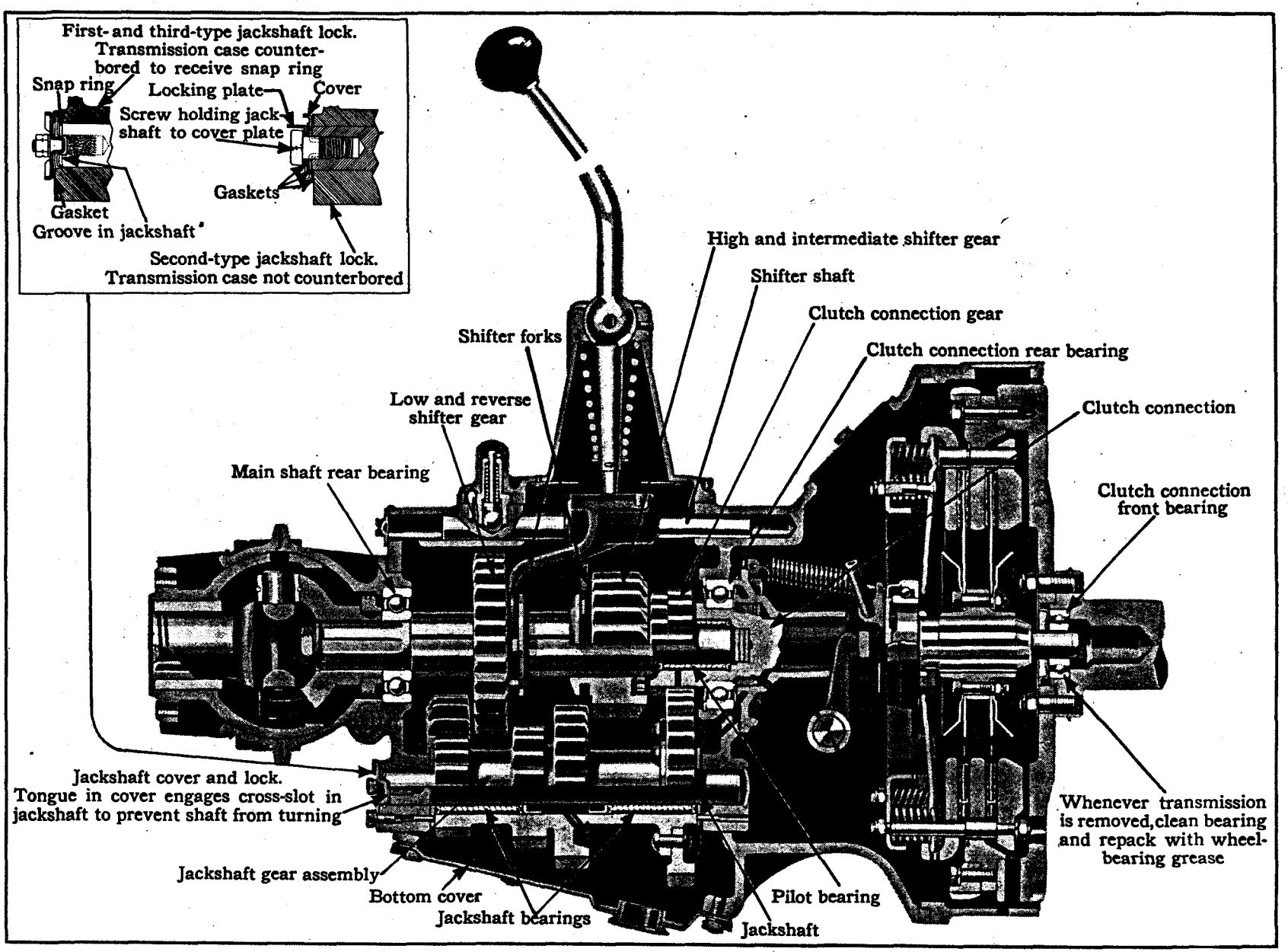

Plate 58. Sectional view of Cadillac 341-A transmission.

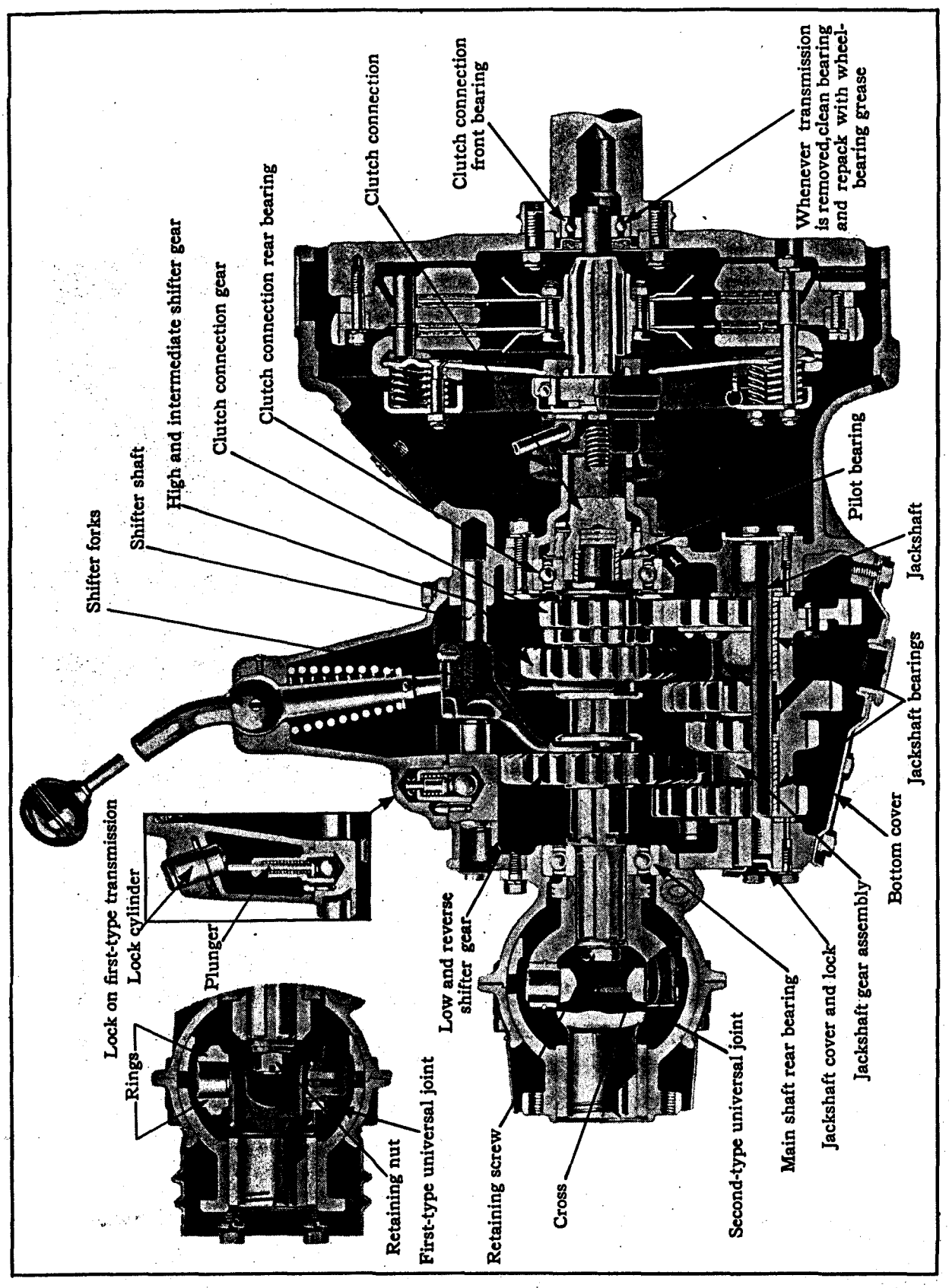

Plate 59. Sectional view of La Salle 303 transmission.

Figs. 1 and 2
Dowel pins are necessary for guiding the transmission during its removal and installation to prevent springing the clutch discs. Cadillac 341-A and LaSalle 303 with plate clutch

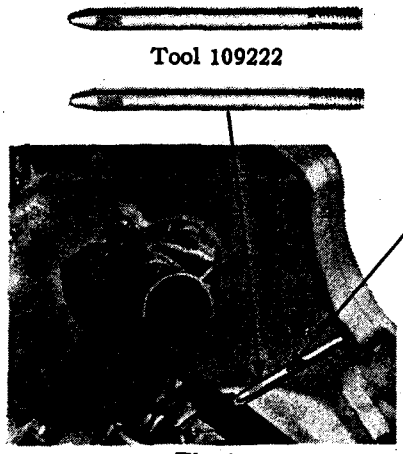

Fig. 1
First-type detachable dowel pin

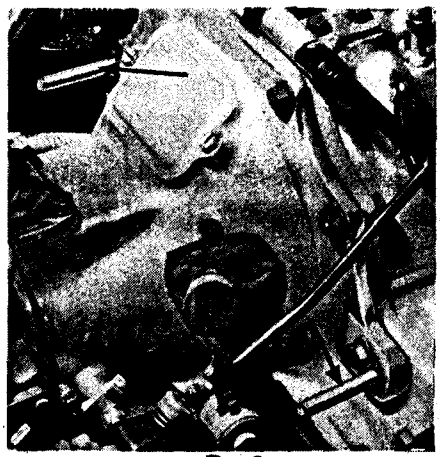

Fig. 2
Second-type permanent dowel pins

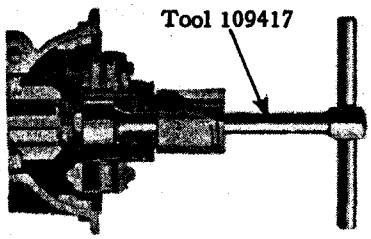

Fig. 3
Wrench for removing universal joint retaining nut. Use wrench 109217 for second-type joint with retaining screw

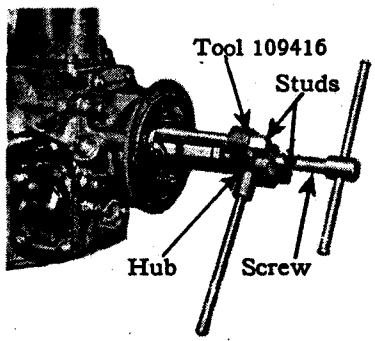

Fig. 4
Universal joint puller. Use adapters in place of studs for Cadillac 341-A and B; LaSalle 303, second type, and 328

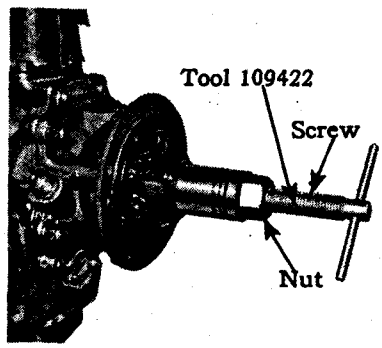

Fig. 5
Universal joint pusher. Use adapter on end of screw for Cadillac 341-A and B; La Salle 303, second type, and 328

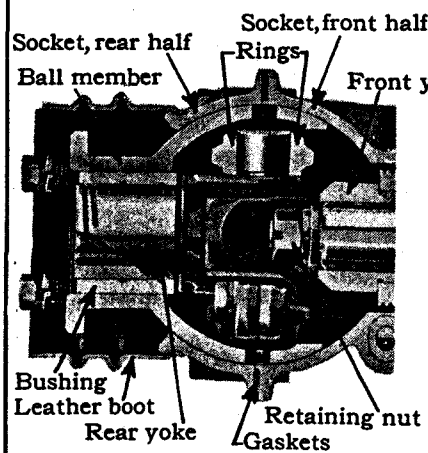

Fig. 6
Sectional view of universal joint. LaSalle 303, first type

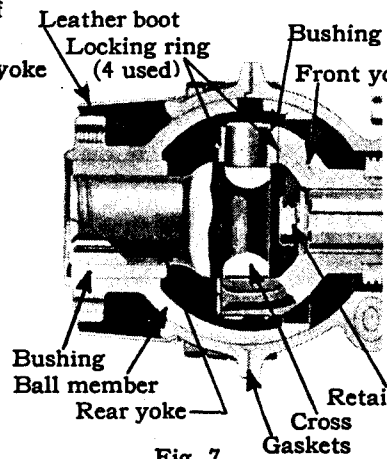

Fig. 7
Sectional view of universal joint. Cadillac 341-A and LaSalle 303, second type

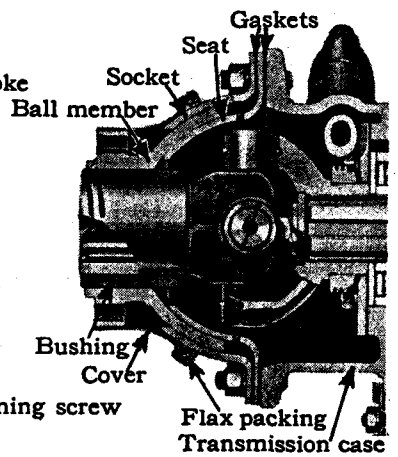

Fig. 8
Sectional view of universal joint. Cadillac 341-B and LaSalle 328

Plate 60. Removal of transmission and universal joint.

Wheels, Rims and Tires

Subject	Cadillac 341		LaSalle 303-328		Specifications		Remarks
WHEELS AND RIMS							
Adjustment of bearings	A	B	303	328			See note 1.
Brake drums, out of round	A	...	303	....	Not over .015 in. (Indicator reading).		
	...	B	....	328	Not over .007 in. (Indicator reading).		
Wheel felloe, out of true (Radial and lateral run-out)	A	B	303	328	Not over $\frac{1}{16}$ in. (Indicator reading).		
Wheel size	A	B	303	....	20 in.		
	...	...	....	328	19 in.		
Rim size	A	B	....	....	20 x 6 in.		
	...	...	303	....	20 x 4½ in.		
	...	...	....	328	19 x 5 in.		
TIRES							
Balancing mark, location of	A	B	303	328	In line with valve stem		
Chain size	A	...	....	....			With some makes of chains it is necessary to use 33x6.20 chains on 32x6.75 tires to prevent interference with brakes.
Recommended pressure—							
Front	A	B	303	328	40 lbs., normal 50 lbs., high speed		
Rear	A	B	303	328	40 lbs.		
					Old marking	New marking	
Size	A	B	....	....	32 x 6.75	7.00/20	
	...	...	303	....	32 x 6.00	6.00/20	125 in. wheelbase
					32 x 6.20	6.50/20	134 in. wheelbase.
	...	...	....	328	31 x 6.20	6.50/19	

1. Bearing Adjustments

The roller bearings in the front and rear wheels of 341-A and 341-B cars and the ball bearings in the front wheels of 303 and 328 La Salle cars should not be adjusted too tight. They should be adjusted so that a very slight amount of play or looseness may be discerned. If, after a bearing has been adjusted to a point that is apparently correct the locking device cannot be placed in position without changing the adjustment loosen instead of tightening the adjusting nut until it can be secured with the locking device.

CAUTION: When adjusting the front wheel bearings care should be taken not to mistake play in the knuckle bolt for play in the wheel bearings. To eliminate dragging of the brakes as a factor in this adjustment it is also a good plan to turn the wheels to the right when adjusting the left-hand wheel bearings, and turn the wheels to the left when adjusting the right-hand wheel bearing. This automatically insures full release of the brakes.

The rear wheel bearings on 303 and 328 cars are not adjustable.

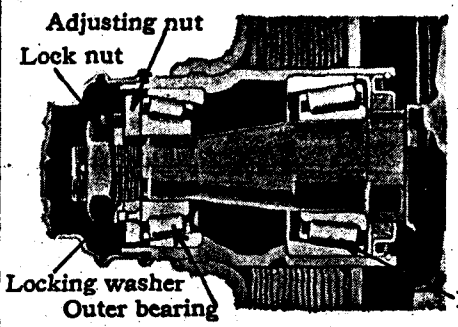

Fig. 1
Sectional view of front wheel hub.
Cadillac 341-B (wood wheel)

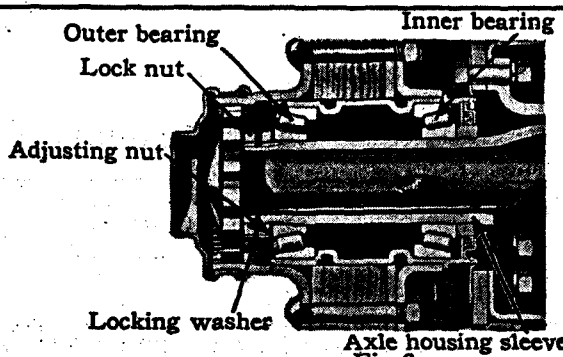

Fig. 2
Sectional view of rear wheel hub.
Cadillac 341-B (wood wheel)

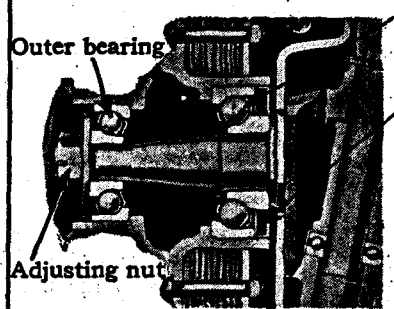

Fig. 3
Sectional view of front wheel hub.
LaSalle 303 (wood wheel)

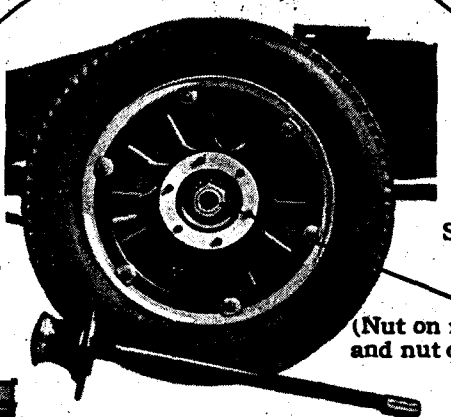

Fig. 5
Rear wheel with axle shaft
removed LaSalle 303

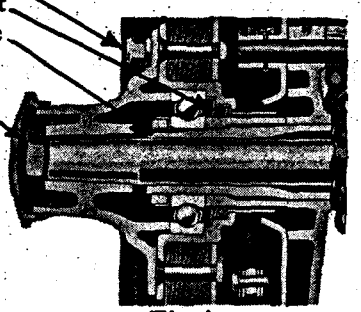

Fig. 4
Sectional view of rear wheel hub.
LaSalle 303 (wood wheel)

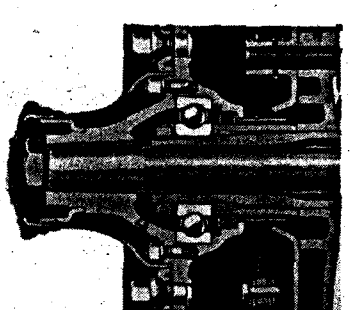

Fig. 6
Sectional view of rear wheel hub.
LaSalle 303 (disc wheel)

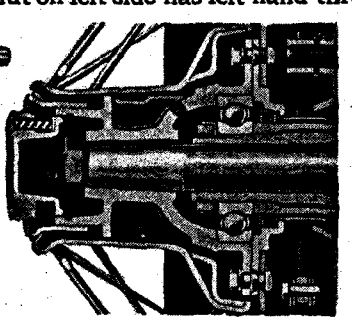

Fig. 7
Sectional view of rear wheel hub.
LaSalle 303 (wire wheel)

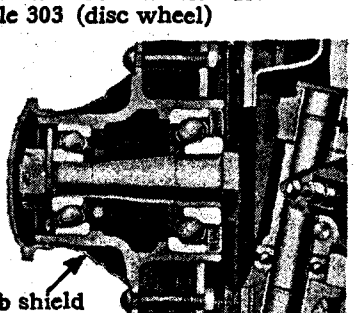

Fig. 8
Sectional view of front wheel hub.
LaSalle 328 (wood wheel)

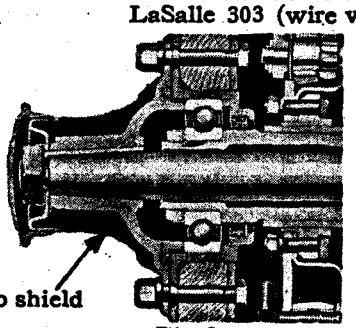

Fig. 9
Sectional view of rear wheel hub.
LaSalle 328 (wood wheel)

Plate 61. Cadillac and La Salle wheel bearings.