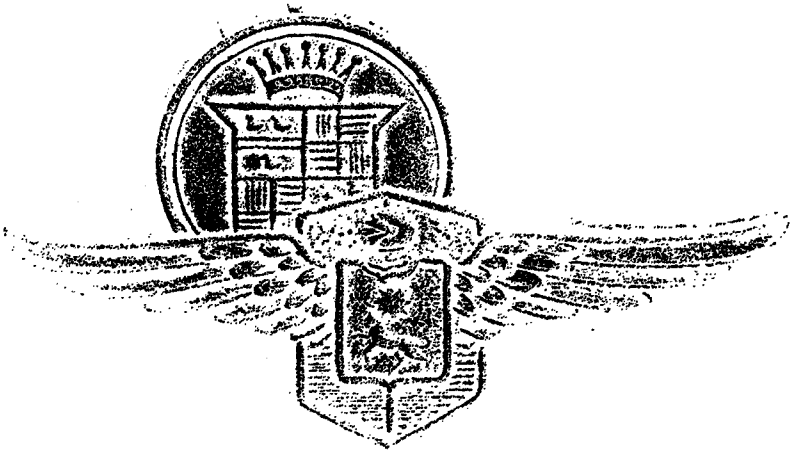

DATA BOOK

CADILLAC
LA SALLE
DATA BOOK

SEPTEMBER 15
1938



SALES PROMOTION
DEPARTMENT

CADILLAC MOTOR CAR DIVISION

All information contained in this Data Book has been carefully checked with sources believed reliable, but is not guaranteed. The Cadillac Motor Car Division reserves the right to change any of this information or specifications without incurring any obligations.

INDEX TO CONTENTS

Major Improvements:
Five Incomparable Cadillacs and LaSalles for 1939 4-5
Pictorial Presentation of New and Important Features 6-13
Major Points of Cadillac-LaSalle Comparison 14-16
Institutional:
History and Cadillac "Firsts" 18-21
Cadillac Precision Manufacture 22-25
General Motors 26-28
LaSalle V-8:
Performance 29
Style and Beauty 30-34
Interior Room and Luxury 34-42
Sunshine Turret Top 43
Unisteel Turret Top Body 44-45
Body Insulation and Weatherproofing 46-49
Bonderizing and Finishing 49
Body Styles and Interior Dimensions 50-51
Cadillac "61":
America's Fastest and Smoothest Eight 53
Exterior Styling 54-56
Interior Luxury 57-62
Body Styles and Interior Dimensions 63-64
Cadillac Sixty Special:
Again the Newest Car in the World 65
Dynamic Styling 66-67
Luxurious Interiors 68-70
Fleetwood Coachwork 70
Body Style and Interior Dimensions 71-72
Cadillac Fleetwood:
Institution 73-74
Steel Coachwork 74-75
Dignified Styling 75-77
Interiors 77-79
Dimensions and Appointments 80-103
8-Passenger Business Cars 104
V-8 Engines:
V-Type Design 105-113
Engine Refinements for 1939 114-115
Mountings 116-117
Enbloc Cylinder and Crankcase 117-118
Cylinder Head 118
Pistons and Rings 119-120
Connecting Rods 120-121
Crankshaft and Syncro-Flex Flywheel 121-123
Main Bearings 123
Valve Mechanism 123-126
Camshaft 126
Fuel System:
Fuel Pump 126-127
Carburetors 127-129
Air Intake 129
Intake Manifold 129-130
Exhaust Manifold 130-131
New Mufflers 131-132
Electrical System:
Peak Load Generators 132-133
Solenoid Starter 134
Headlighting System 134
Tail Lamps and License Plate Illuminator 135
Circuit Breaker 135
Horns 135
Ignition System 135
Batteries 135-136
Cooling System:
Radiator Core 136-137
Radiator Shutters 137
Filler Cap 138
Fan 138

Water Pump....138
Water Circulating System....139
Full Length Water Jackets....140
Lubrication System:
Engine Lubrication....141-142
Crankcase Ventilation....142-143
Clutch....143-144
Syncromatic Gearshift....144-146
Syncro-Mesh Transmission....146-148

V-8 Chassis:
Chassis Improvements....149-150
Controlled-Action Ride....150-152
Hi-Plane Hotchkiss Drive....153-155
Hotchkiss Drive....155-158
Rear Springs and Shackles....158-159
Shock Absorbers....159-160
Ride Stabilizers....160-162
Knee Action....162-164
Steering Systems....164-167
Frames....167-169
Hydraulic Brakes....169-172
Handbrake....172-173
Propeller Shaft....173
Hypoid Rear Axles....173-175
Wheels and Tires....175
Hearse and Ambulance Chassis....176

Cadillac Sixteen:
Highest Standard of the World....177-178
Styling....179-180
Interiors....181-183
Dimensions and Appointments....184-207
Sixteen Cylinder Engine....209
Advantages of Sixteen Cylinders....210-212
Advantages of 135 Degree V-type Design....212-213
Engine Construction:
Enbloc Design....214
Crankcase and Cylinder Block....214-215
Engine Mounting....215-216
Crankshaft and Flywheel....216
Pistons and Connecting Rods....217-218
Valve Gear....218
Lubrication System....218-220
Crankcase Ventilation....220-221
Fuel System....221-222
Cooling System....223-224
Electrical System....224-225
Ignition System....225
Circuit Breaker....225
Clutch....226
Transmission....226
Syncromatic Shift....227
Sixteen Chassis:....227
Frame....228
Knee Action and Rear Suspension....228-229
Center Point Steering....229-230
Shock Absorbers....230
Double Ride Stabilizers....230-231
Hydraulic Brakes....231
Hotchkiss Drive....231
Hypoid Rear Axle....232

General:
Service:
Service as a Sales Aid....233
Lubrication Agreement....234
Service Contract....235
Exclusive Accessories....236-246
Detailed Specifications....247-258

FIVE INCOMPARABLE CADILLACS

The thirty-six years of Cadillac precision manufacture have recorded progressive advancements in every phase of motor car development. Climaxing this continuous period of engineering leadership and public acceptance the new Cadillacs and LaSalle are so appreciably outstanding that they are the finest values in motor car transportation for 1939.

One of the most extraordinary features of these new cars is another Cadillac "First" embracing a phenomenal riding comfort achievement. Without question the new Cadillacs and LaSalle are, in beauty, luxury, comfort and mechanical excellence, incomparable values in their respective price fields.

LA SALLE has a new roomier and more luxurious body, a new chassis, retaining its incomparable Cadillac V-8 engine. LaSalle is the only car of fine quality in the $900 to $1500 car field.

CADILLAC "61", larger, roomier and more than ever a quality built Cadillac, presents new styling which will be welcomed for its sheer beauty among similarly priced cars of radical design.

CADILLAC SIXTY SPECIAL is again the Newest Car in the World. New frontal appearance provides Cadillac identity and furthers its dynamic qualities.

CADILLAC FLEETWOOD establishes another new precedent for luxurious comfort. In dignity of appearance, roominess and ease of handling the new Fleetwoods excel all other fine cars.

CADILLAC SIXTEEN, the World's Most Luxurious Motor Car, has yet to be approached in any particular by any car American or European. This alone is sufficient to keep the Sixteen unchanged.

AND LA SALLES FOR 1939

The major 1939 Cadillac-LaSalle advancements embrace:

New Beauty	New Vision
New Luxury	New Handling Ease
New Roominess	New Economy
New Comfort	New Safety

Cadillac enjoyed in 1938 the preferred selection of half of America's discriminating fine car motorists. Cadillac is one of the few motor cars to increase its share of the market, 1938 vs. 1937. Of these few, Cadillac received the largest percentage of increase, *seventy-six per cent.*

REGISTRATIONS*

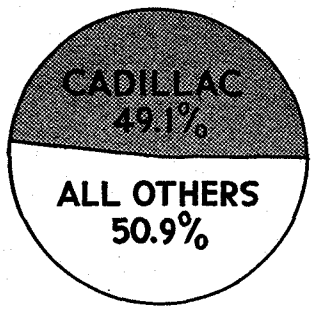

$1500 to $2000

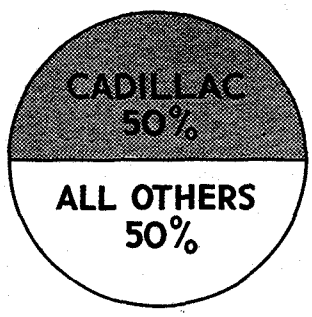

Above $2000

In addition Cadillac-LaSalle outsold every other series of cars having 5-sedans priced at or above $1300.

With these distinctive sales advantages and this tremendous public acceptance, which should again increase greatly with the new lower prices, 1939 promises to be the most outstanding Cadillac-LaSalle year.

**Percentages based upon registration figures supplied by R. L. Polk & Co. for the period Jan. 1 to Aug. 1, 1938.*

AMERICA'S *SMARTEST* AND *MOST*

The New LaSalle

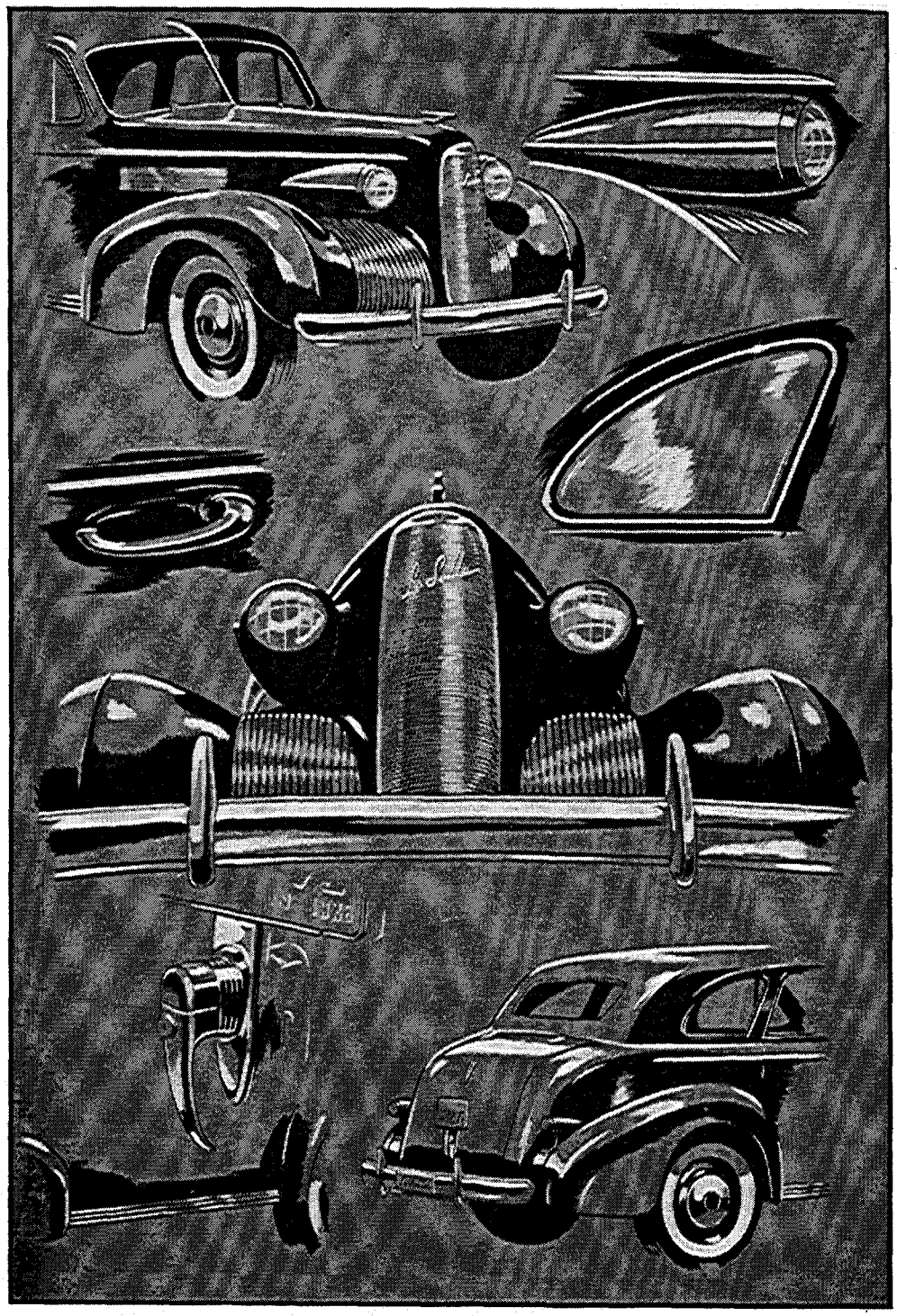

BEAUTIFUL MOTOR CARS FOR 1939

The New Cadillacs

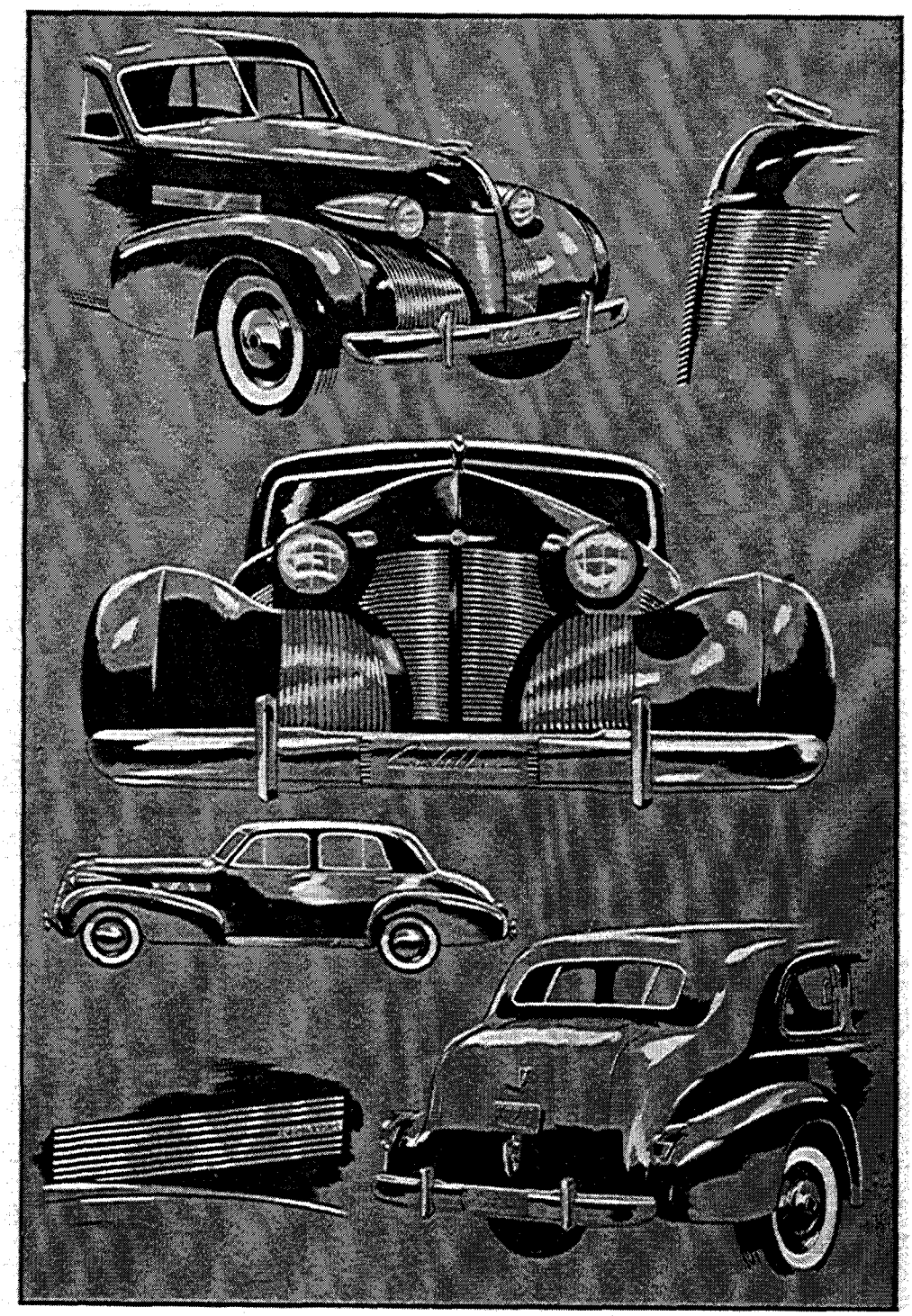

All Cadillacs and LaSalles
ROOMINESS

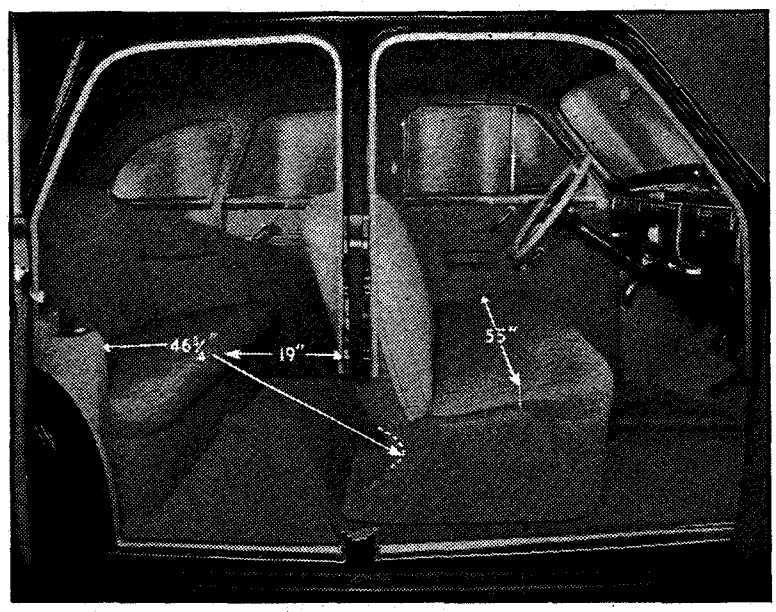

LaSalle (illustrated) and Cadillac "61" have 3 inches greater legroom, 1¾ inches wider front seats, 1¼ inches greater front seat headroom. Higher, wider doors, lower floors and relocated pillar posts increase ease of entrance.

The new Cadillac Sixty Special has greater interior roominess than any other car of similar wheelbase. Dimensions exceed those of many much larger cars.



The Cadillac Fleetwoods are the roomiest of all large fine cars. In every interior dimension they are unexcelled

Feature a Wealth of Interior

LUXURY

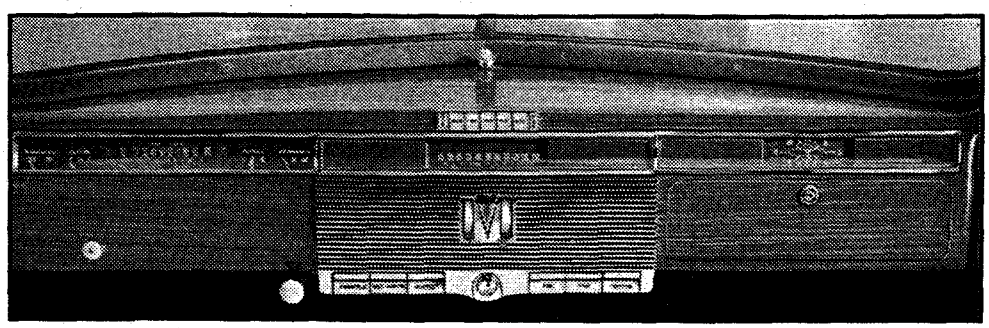

Luxurious highlight of every new Cadillac-LaSalle interior is the beautiful clear vision instrument panel.

All models have new hardware, new garnish mouldings and paneling and electric clocks as standard equipment.

Cadillac "61" and Sixty Special have six new choice upholstery options and new trimming styles.

The Fleetwoods also have new interior trim and burled walnut paneling in a pleasing new design.

The new Cadillacs and LaSalle have greater interior roominess and more luxurious appointments than any other car of their respective classes.



All Cadillacs and LaSalle have a center arm rest which divides the rear seat into two luxurious arm chairs.

CADILLAC - LA SALLE CONTROLLED - ACTION RIDE

Greatest Advancement in Riding Comfort Since Knee Action

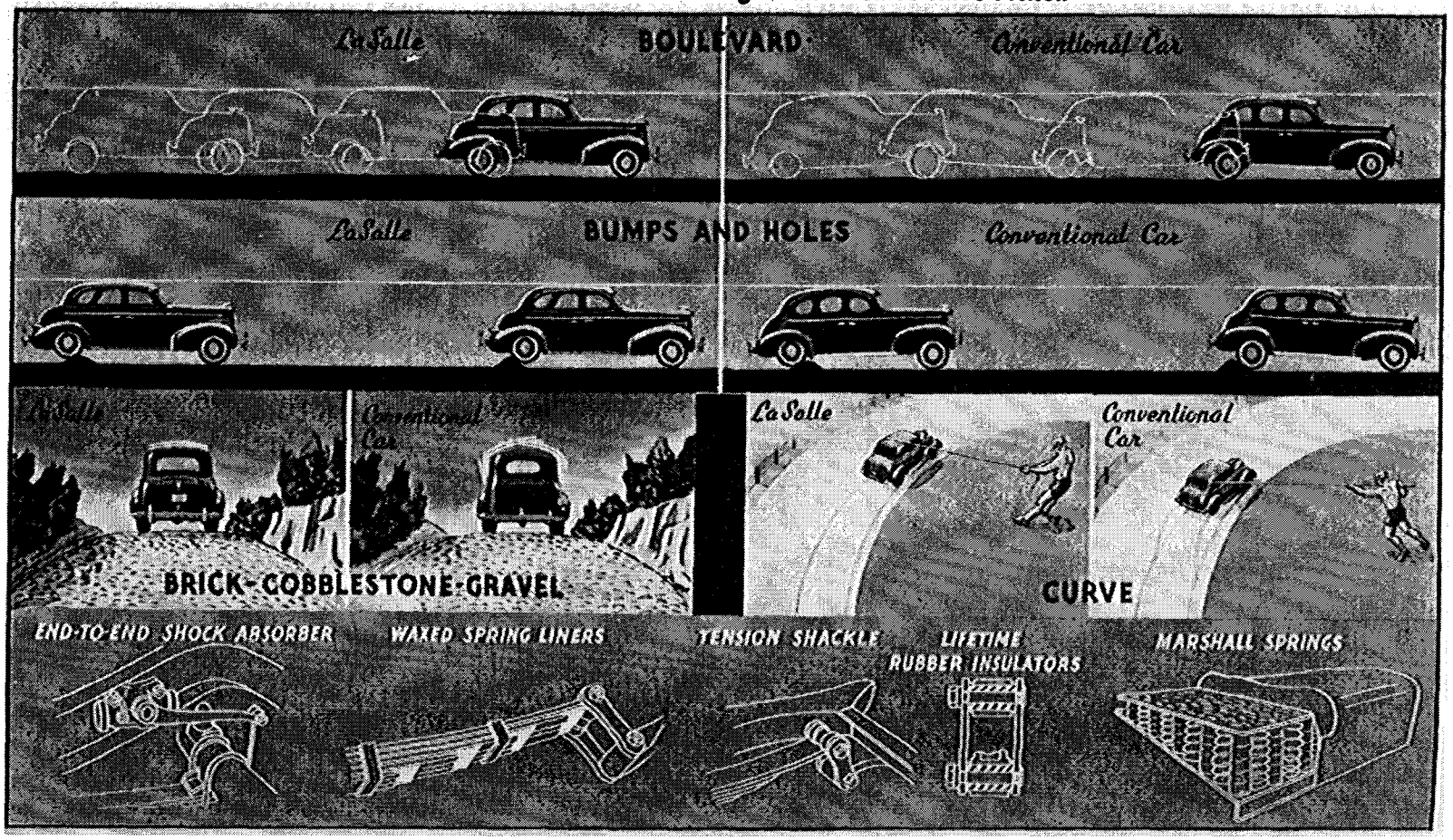

Cadillacs and LaSalle Have

SUPERLATIVE PERFORMANCE AND ECONOMY

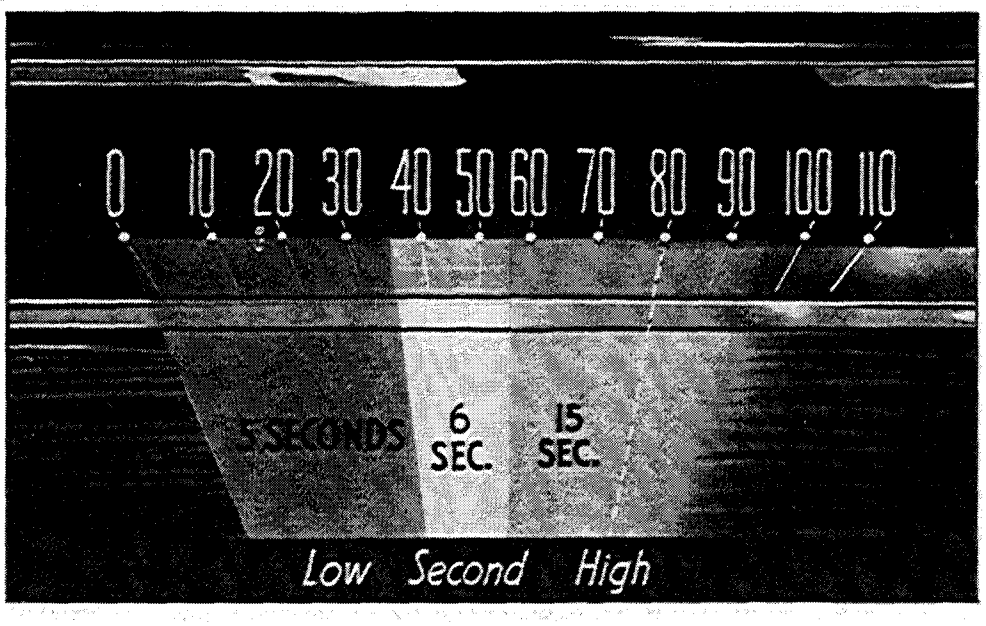

Performance means more than acceleration. The above illustration of LaSalle is typical but, in addition, smoothness and quietness are far superior to other cars.

Each Cadillac is unexcelled in performance by any other make in its price class. Operating economy for each new model is superior to all cars of comparable size.

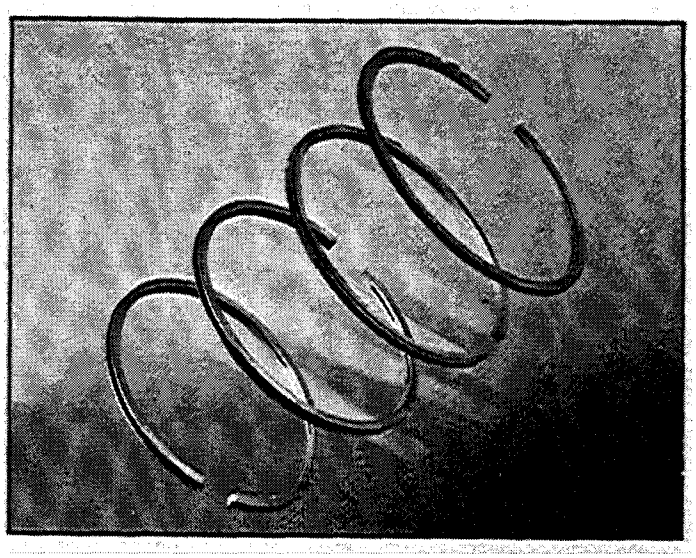

Piston rings are ferrox treated, an abrasion resistant material which triples cylinder bore durability and improves oil economy immeasurably.

IN HANDLING EASE



Syncromatic Gearshift has been improved by shortening the travel between gears. Also, the Syncro-Mesh transmission has a new, positive interlock which greatly improves smooth, easy shifting.

Controlled-Action Ride, Knee Action, improved steering, in addition to the features illustrated, combine to make the new Cadillacs and LaSalle the most effortless cars to drive.

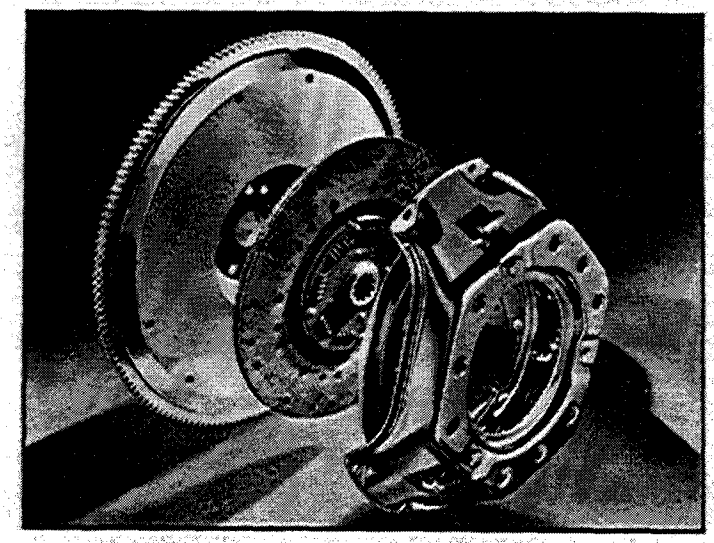

Shifting ease and smoothness has been further increased by an improved semi-centrifugal clutch.

Are Unexcelled

IN VISION

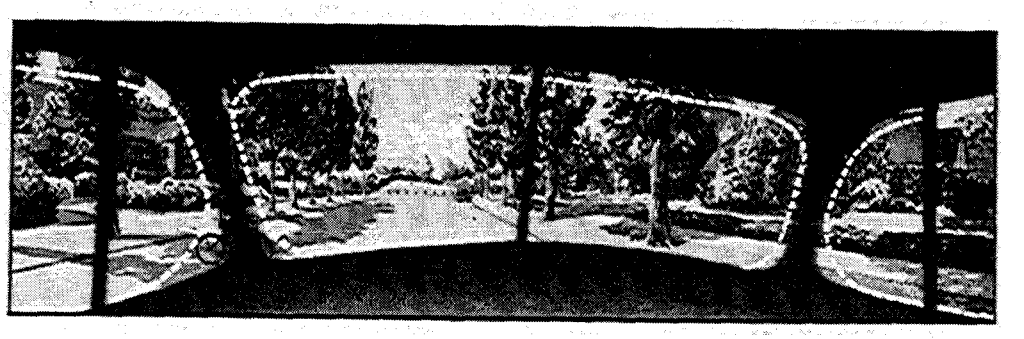

The greater height and width of the Cadillac "61"-LaSalle windshield and narrower pillars are clearly shown in the above comparison with a conventional car. Rearward vision through the rear view mirror has also been increased.

All new Cadillac-LaSalle models now have extensive outward vision for greater driving safety and riding enjoyment.

The outstanding improvements made in ease of handling and in vision provide the new Cadillac or LaSalle owner with an infinite amount of *mental ease* while driving.

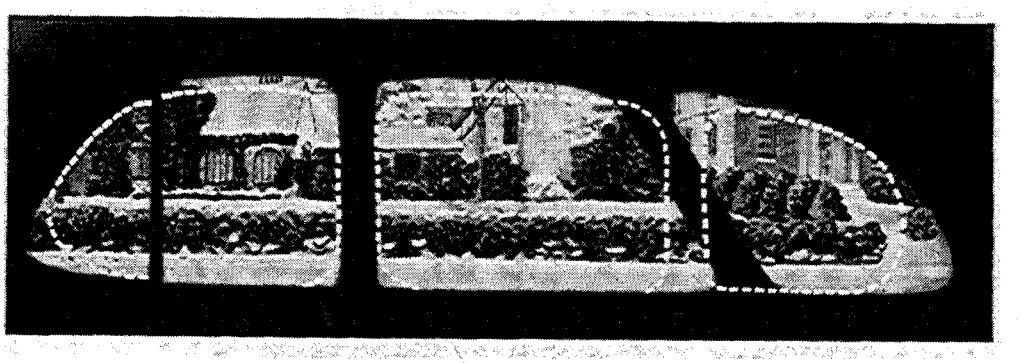

Cadillac "61" and LaSalle side vision have also been increased to an average of 25% more than this conventional car.

MAJOR POINTS OF COMPARISON

	LaSalle	Cadillac "61"	Cadillac Sixty Special	Cadillac Fleetwood V-8	Cadillac Sixteen
ENGINE					
Design	90° V-type	90° V-type	90° V-type	90° V-type	135° V-type
Displacement	322 cu. in.	346 cu. in.	346 cu. in.	346 cu. in.	431 cu. in.
Bore and stroke	3⅜" x 4½"	3½" x 4½"	3½" x 4½"	3½" x 4½"	3¼" x 3¼"
Rated horsepower	125 @ 3400	135 @ 3400	135 @ 3400	140 @ 3400	185 @ 3600
Taxable horsepower	36.45	39.20	39.20	39.20	67.60
Standard compression ratio	6.25-1	6.25-1	6.25-1	6.7-1	6.75-1
Syncro-Flex flywheel	No	Yes	Yes	Yes	No
Torsional vibration dampener	No	Yes	Yes	Yes	Yes
Wrist pin	Straight bore	Tapered bore	Tapered bore	Tapered bore	Locked in rod
Carburetor size	1⅛"	1¼"	1¼"	1¼"	Two-1⅛"
Fuel tank capacity	22 gals.	22 gals.	22 gals.	26.5 gals.	26.5 gals.
Peak load generator	Voltage Reg.	Voltage Reg.	Voltage Reg.	Current Control and Voltage Reg.	Current Control and Voltage Reg.
BATTERY					
Amperes	112	112	112	112	164
Plates	17	17	17	17	21

MAJOR POINTS OF COMPARISON—Cont'd

	LaSalle	Cadillac "61"	Cadillac Sixty Special	Cadillac Fleetwood V-8	Cadillac Sixteen
CHASSIS					
Wheelbase	120″	126″	127″	141″	141″
Overall length with bumpers	202 9/16″	207 1/4″	214 1/4″	225 1/8″	222″
Frame	Double drop rigid X, I-beam	Double drop rigid X, I-beam	Double drop rigid X, I-beam	Rigid X, Channel beam	Rigid X, Channel beam
Knee action coils	Encompassed by side bars	Encompassed by side bars	Encompassed by side bars	Outside side bars	Outside side bars
Steering drag link	Parallel cross	Parallel cross	Cross mounted	Longitudinal	Longitudinal
BRAKES					
Brake lining area	196 sq. in.	196 sq. in.	208 sq. in.	258 sq. in.	258 sq. in.
Braking ratio	54 1/2% front, 45 1/2% rear	54 1/2% front, 45 1/2% rear	54 1/2% front, 45 1/2% rear	57% front, 43% rear	57% front, 43% rear
SHOCK ABSORBERS					
Front	End-to-end	End-to-end	End-to-end	End-to-end	End-to-end
Rear	End-to-end	End-to-end	End-to-end	End-to-end Manual adj.	End-to-end Manual Adj.
Front stabilizer location	Forward of front susp.	Forward of front susp.	Forward of front susp.	Rear of front suspension	Rear of front suspension
Rear stabilizer	None	None	Cross link	Cross link	Cross link

MAJOR POINTS OF COMPARISON—Cont'd

	LaSalle	Cadillac "61"	Cadillac Sixty Special	Cadillac Fleetwood V-8	Cadillac Sixteen
SPRING SHACKLES					
Type	Tension link	Tension link	Compression "U"	Double bar	Double bar
Mounting	All rubber bushings	All rubber bushings	Rubber front. Threaded rear.	Rubber front and upper. Threaded lower	Rubber front and upper. Threaded lower
Method of drive	Hi-Plane Hotchkiss	Hi-Plane Hotchkiss	Hotchkiss	Hotchkiss	Hotchkiss
REAR AXLE					
Rear axle ratio	3.92—1	3.92—1	3.92—1	4.58—1	4.31—1
TIRES	7.00—16 4 ply	7.00—16 4 ply	7.00—16 4 ply	7.50—16 6 ply	7.50—16 6 ply
BODY					
Types	5	4	1	12	12
Construction	Fisher Unisteel	Fisher Unisteel	Fleetwood, Steel Construction	Fleetwood, Steel Construction	Fleetwood, Steel Construction
Color options	14	14	14	14	14
Upholstery options	4 cloths 6 leathers	4 cloths 6 leathers	6 cloths	7 cloths 4 leathers	10 cloths 4 leathers

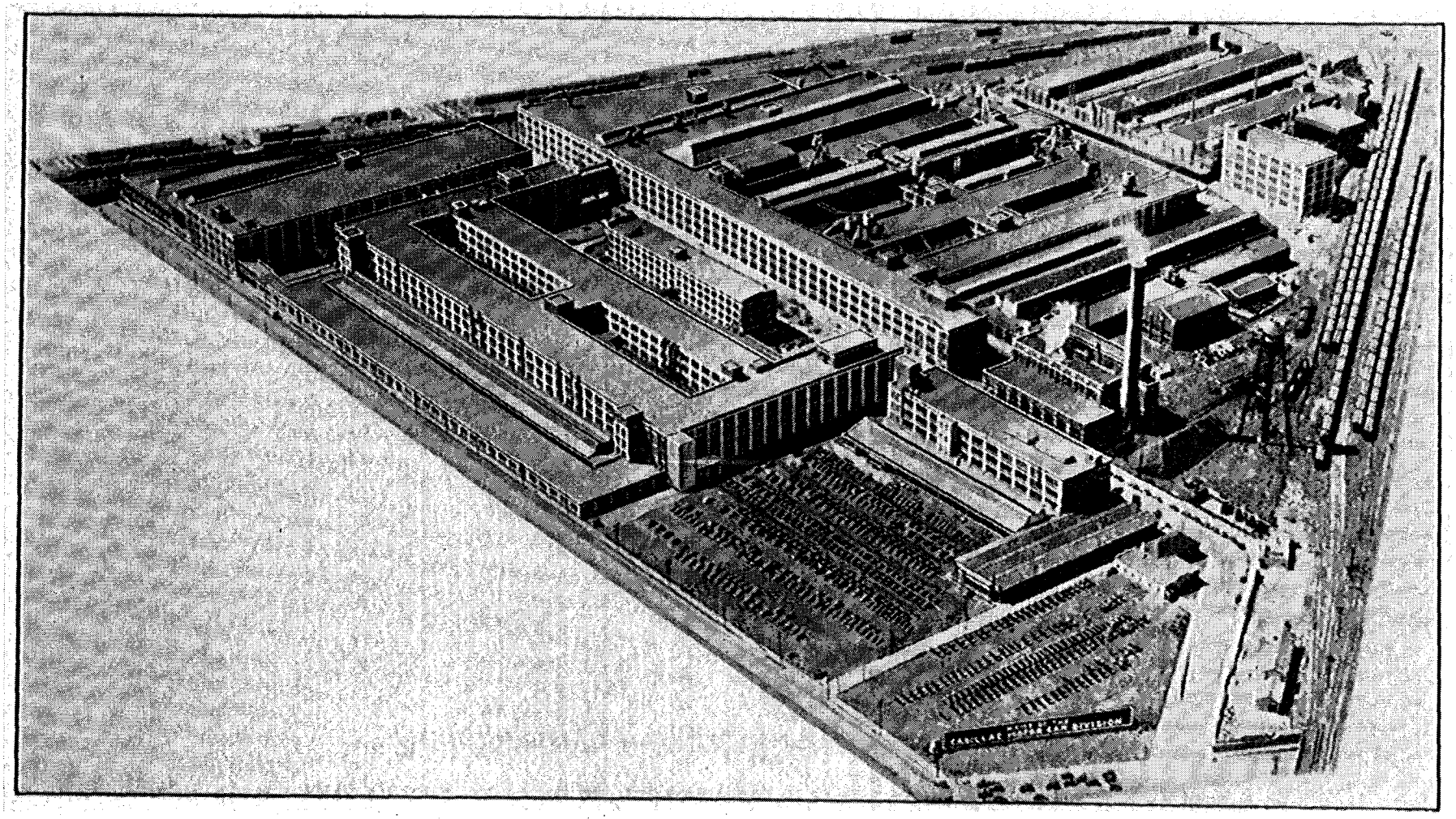

The Home of Cadillac and La Salle

HISTORY OF THE CADILLAC MOTOR CAR DIVISION

An Impressive Record of Advanced Progress

Year	*Total Production*	*Type of Cars Produced*	*List Price (Typical Car)*	*Wheelbase*	*Milestones*
1902	—	—	—	—	Detroit Automobile Co., established 1899, reorganized as "Cadillac Automobile Co."
1903	1,698	1 cyl. "A"	$ 850	76″	
1904	2,457	1 cyl. "B"	900	76″	Cadillac Automobile Co. and Leland & Faulconer consolidate as "Cadillac Motor Car Company" with Henry M. Leland, grand old man of the industry, as General Manager.
1905	3,942	1 cyl. "F" 4 cyl. "D"	950 2,800	76″ 100″	**First** Four Cylinder establishes Cadillac as the pioneer of multi-cylinder motor cars.
1906	4,059	1 cyl. "M" 4 cyl. "H"	950 2,500	76″ 102″	
1907	2,884	1 cyl. "M" 4 cyl. "G" 4 cyl. "H"	950 2,000 2,500	76″ 100″ 102″	Famous Johannsen gauges, **First** imported into United States by Cadillac, enable Cadillac to become the following year the—
1908	2,377	1 cyl. "T" 4 cyl. "H"	1,000 2,500	82″ 102″	**First** American Car to be awarded the Dewar Trophy by Royal Automobile Club of London for being **First** to achieve interchangeability through standardization of parts.
1909	7,868	4 cyl. "30"	1,400	106″	Cadillac purchased by General Motors Corporation. Four cylinder production increases six times over 1908 production.
1910	10,044	4 cyl. "30"	1,600	106″	**First** to offer Closed Bodies as standard equipment. Less than 10% of cars then produced had closed bodies.
1911	10,166	4 cyl. "30"	1,800	116″	Custom Coachcraft by Fleetwood Body Company begins.

Year	Total Production	Type of Cars Produced	List Price (Typical Car)	Wheelbase	Milestones
1912	12,547	4 cyl. "1912"	$3,250	116″	**First** to equip cars with Electric Starting, Lighting and Ignition, for which Cadillac again was awarded the Dewar Trophy. **First and only** car in the world to win this award twice.
1913	17,290	4 cyl. "1913"	3,250	120″	
1914	7,823	4 cyl. "1914"	2,800	120″	**First** in this country to build a V-type, water-cooled eight cylinder engine. This engineeringly correct engine type is now used by every fine car manufacturer. **First** to use thermostatic control of cooling system.
		V-8 "51"	2,800	122″	
1915	20,609	V-8 "53"	2,950	122″	**First** to use Tilt-Beam Headlights for night driving safety.
1916	16,355	V-8 "53"	2,950	122″	Cadillac becomes "Division of General Motors."
1917	19,796	V-8 "55"	3,110	125″	Cadillac adopted as **Standard** Officers' car by U. S. Army after gruelling tests at Marfa, Texas.
1918	12,010	V-8 "57"	3,535	125″	Cadillac supplied 2,350 cars and 1,157 V-8 artillery tractor engines to U. S. Army.
1919	19,932	V-8 "57"	4,090	125″	
1920	19,615	V-8 "59"	4,750-4,950	125″	
1921	11,272	V-8 "61"	4,950	132″	Cadillac completes new Clark Ave. plant, Detroit, most modern in the industry. Retail stores opened at Detroit and Chicago.
1922	22,501	V-8 "61"	4,100	132″	**First** to use Thermostatic Carburetor Control.
1923	21,979	V-8 "V-63"	4,150	138″	**First** to build the inherently balanced 90° V-type eight cylinder engine. **First** to use the Compensated Crankshaft. Four wheel brakes featured.
1924	17,941	V-8 "V-63"	3,835	132″	**First** to provide wide choice of Duco Exterior Finishes as standard equipment.

Year	Total Production	Type of Cars Produced	List Price (Typical Car)	Wheelbase	Milestones
1925	22,392	V-8 "314"	$3,195	132"	**First** to use Crankcase Ventilation. $5,000,000 expansion program started. Cadillac contracts for entire output of Fleetwood Custom Body Co.
1926	28,520	V-8 "314"	3,250	132"	
1927	35,115	V-8 LaS. "303"	2,650	125"	**First** to establish new trend in motor car styling with LaSalle, lowest price V-8 in Cadillac history. **First** to develop a comprehensive Service Policy and place it on a nationwide basis.
		V-8 "341-A"	3,395	140"	
1928	41,372	V-8 LaS. "328"	2,495	125"	**First** to develop and use the Clashless Syncro-Mesh Transmission. **First** to install Security Plate Glass as standard equipment. **First** to adopt Chrome Plating as standard.
		V-8 "341-B"	3,495	140"	
1929	36,687	V-8 LaS. "340"	2,475	134"	
		V-8 "353"	3,295	140"	
1930	22,552	V-8 LaS. "345"	2,345	134"	**First** to build a Sixteen Cylinder Automobile engine. Later in the year the V-12 Cadillac was introduced. **First** to offer a complete line of multi-cylinder cars—all of V-type design.
		V-8 "355"	2,845	134"	
		V-12 "370"	3,945	140"	
		V-16 "452"	5,950	148"	
1931	15,308	V-8 LaS. "345-A"	2,345	134"	**First** to use Hydraulic Valve Silencers.
		V-8 "355-A"	2,845	134"	
		V-12 "370-A"	3,945	140"	
		V-16 "452-A"	5,950	148"	
1932	7,935	V-8 LaS. "345-B"	2,645	136"	**First** to introduce Super-Safe Headlights, Air-Cooled Generator, Completely Silent Transmission and Full Range Ride Regulator.
		V-8 "355-B"	3,095	140"	
		V-12 "370-B"	3,795	140"	
		V-16 "452-B"	5,095	149"	
1933	5,865	V-8 LaS. "345-C"	2,495	136"	**First** to provide fine cars with No-Draft Ventilation.
		V-8 "355-C"	2,995	140"	
		V-12 "370-C"	3,695	140"	
		V-16 "452-C"	6,250	149"	

Year	Total Production	Type of Cars Produced	List Price (Typical Car)	Wheelbase	Milestones
1934	12,066	Str. "8" LaS. "34-50"	$1,595-1,695	119"	**First** to introduce Today's Mode of Streamlining in LaSalle. **First** American Car with spare tire concealed within body. **First** to develop and use Knee Action Wheels.
		V-8 "10"	2,545-2,695	128"	
		V-12 "40"	4,045	146"	
		V-16 "60"	6,750	154"	
1935	23,191	Str. "8" LaS. "35-50"	1,545-1,695	120"	**First** and **only** fine cars equipped with one-piece solid steel Turret Top. For five years, more Cadillacs purchased than any other make of fine car.
		V-8 "10"	2,495	128"	
		V-12 "40"	4,045	146"	
		V-16 "60"	6,750	154"	
1936	25,905	Str. "8" LaS. "36-50"	1,225	121"	48.1% of all cars sold above $1,500 were Cadillacs.
		V-8 "60"	1,695	121"	
		V-8 "70"	2,445	131"	
		V-8 "75"	2,645	138"	
		V-12 "80"	3,145	131"	
		V-12 "85"	3,695	138"	
		V-16 "90"	7,750	154"	
1937	46,153	V-8 LaS. "37-50"	1,260*	124"	Return to V-type eight cylinder engine in LaSalle. LaSalle V-8 proves stamina, dependability and speed of present day stock car by breaking all previous stock car records at Indianapolis Speedway. Deliveries at retail hit all-time peak in all Cadillac history.
		V-8 "37-60"	1,660*	124"	
		V-8 "37-65"	2,090*	131"	
		V-8 "37-70"	2,595*	131"	
		V-8 "37-75"	2,815*	138"	
		V-12 "37-85"	3,890*	138"	
		V-16 "37-90"	7,750*	154"	
1938	24,950	V-8 LaS. "38-50"	1,385*	124"	**First** to create and introduce a practical motor car of advanced styling. **First** to engineer and build the 135° V-type sixteen cylinder engine. A majority public recognition of **Cadillac Merit** and **Advanced Progress** is definitely established.
		V-8 "38-60"	1,775*	124"	
		V-8 "38-60S"	2,085*	127"	
		V-8 "38-65"	2,285*	132"	
		V-8 "38-75"	3,075*	141"	
		V-16 "38-90"	5.265*	141"	
1939		V-8 LaS. "39-50"		120"	**First** to develop and introduce Controlled-Action, greatest advancement in riding comfort and safety since Knee Action, embracing new Hi-Plane Hotchkiss drive rear supension. More than half of all fine cars sold above $2000 are Cadillacs.
		V-8 "39-61"		126"	
		V-8 "39-60S"		127"	
		V-8 "39-75"		141"	
		V-16 "39-90"		141"	

*Advertised Delivered Price at Detroit. State and local taxes extra.

CADILLAC PRODUCTION

A Story of Precision in Manufacture

When the Cadillac Automobile Company was organized in 1902, its President and General Manager framed in these words the fundamental policy which has guided the formation and execution of every Cadillac program ever since, "We are not going to build," he said, "merely another automobile. We are going to build the finest car it is possible to produce."

This is Cadillac's heritage—one which is as rigidly enforced today as it was 36 years ago. The Cadillac-built LaSalle V-8—lowest in price, and the Cadillac Sixteen—finest in motor car transportation—are both built to Cadillac's highest precision standards. The same staff of Cadillac engineers who spent twenty-four years perfecting the inherently balanced 90° V-8 engine, are the same engineers who designed the world's only present sixteen cylinder motor car—the very finest in automotive engineering design ever created. The Cadillac factory, its manufacturing processes, and above all its Standards of Precision have all been devoted to building the Sixteen. This same engineering staff, this same factory with all of its specialized equipment, these same precision standards are all utilized to build LaSalle. While all other manufacturers are content to build a *good* car, Cadillac is content with nothing less than *excellence.* Every Cadillac-LaSalle salesman can honestly tell every Cadillac and LaSalle V-8 prospect that these cars are designed and built by the same craftsmen to the same standards as is the Cadillac Sixteen. No other salesman has such a forceful, convincing prestige story to tell.

Basis for Cadillac accuracy in manufacture is the famed Johannsen Gauge Blocks, first imported into this country by Cadillac. So microscopic is their accuracy that two blocks fitted together become as one single unit and can be separated only by force.

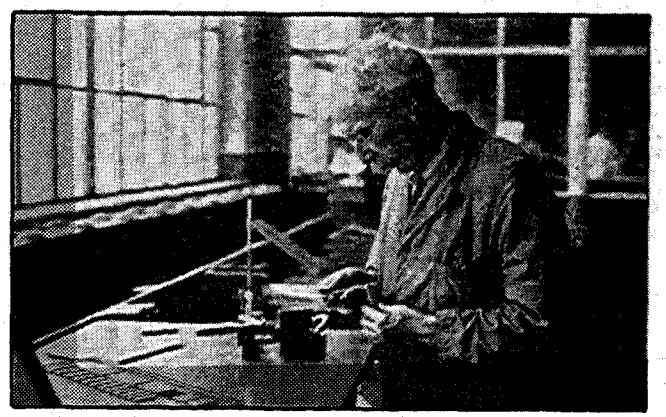



The story of Cadillac's high quality operations begins at the foundry cupola where crankcase and block are cast in one unit from molten iron of special steel content.

At the receiving room every connecting rod forging is carefully tested for hardness and temper in accordance with metallurgical specifications.

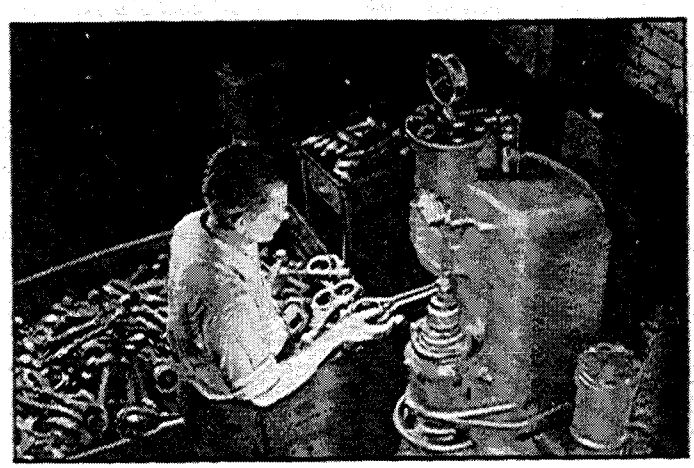

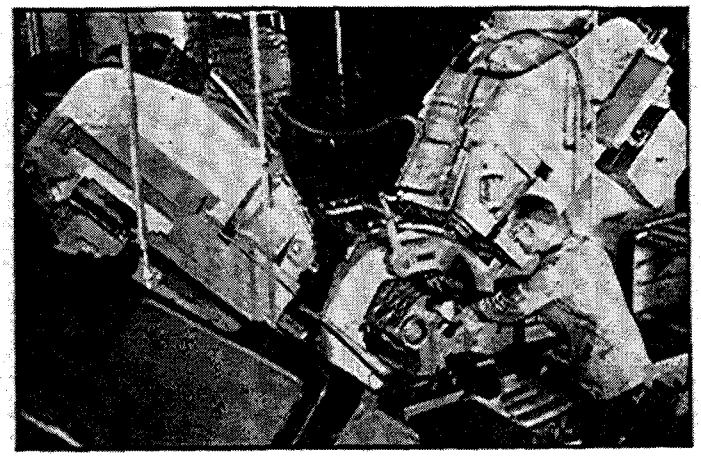

This modern, multi-purpose machine rough bores cylinders and drills valve guide bushing holes for both banks of cylinders in one operation. Only from such efficiency in production is Cadillac able to provide highest quality at lowest cost to Cadillac-La Salle buyers.

Cylinder bores are checked for wall thickness in all directions with a magnetic gauge to insure uniform engine cooling.

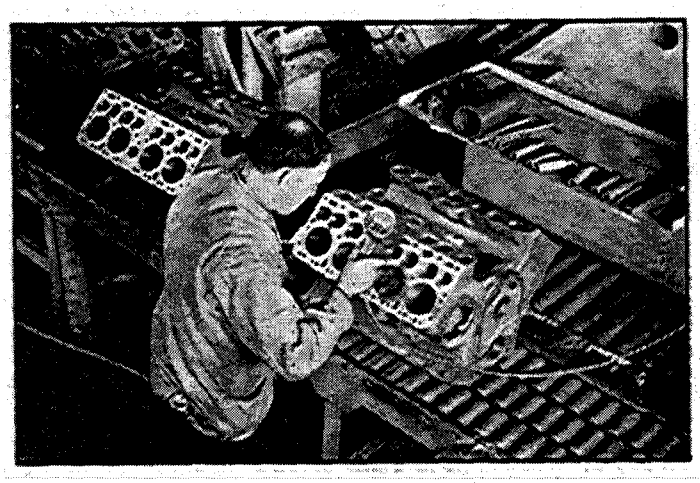

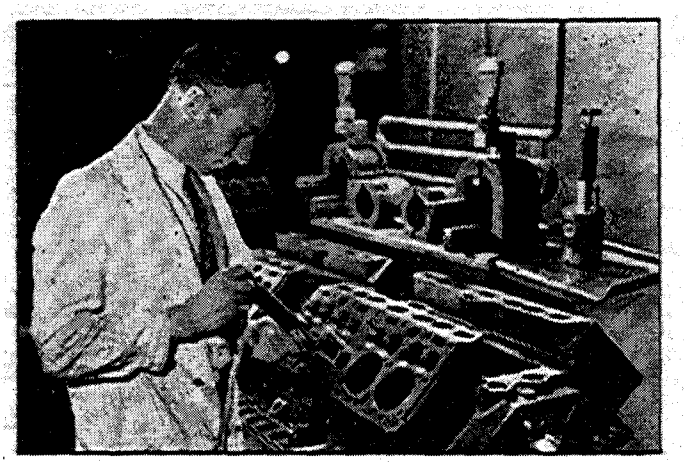

Cylinder bores are graded into one of 30 different sizes with a special expanding gauge.

Pistons are likewise graded into 30 dimensional sizes. These two precision steps afford a selective fitting of piston-to-bore within a maximum variation of .00007 inches—about 1–40 the width of a human hair.



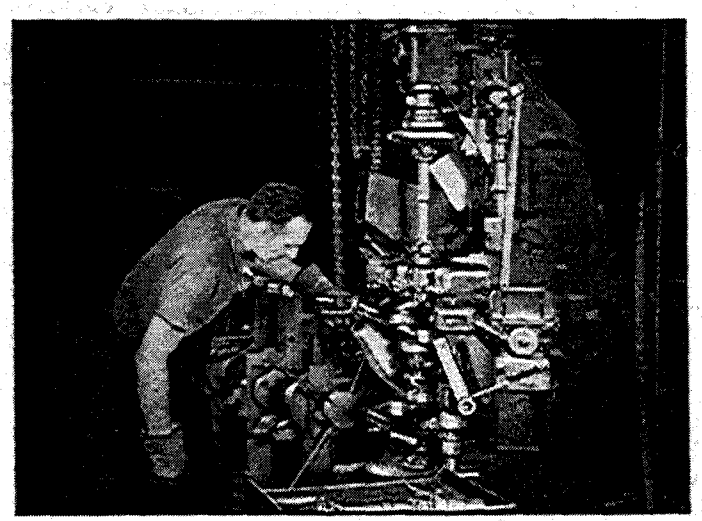

Balancing the crankshaft to $\frac{1}{16}$ ounce inch limit, after which crankshaft, clutch and flywheel will be balanced within a $\frac{1}{2}$ ounce inch limit.

Developed for and first used by Cadillac, this machine polishes all the lobes of the camshaft at once to an extremely smooth finish, which could not possibly be obtained by antedated hand methods.

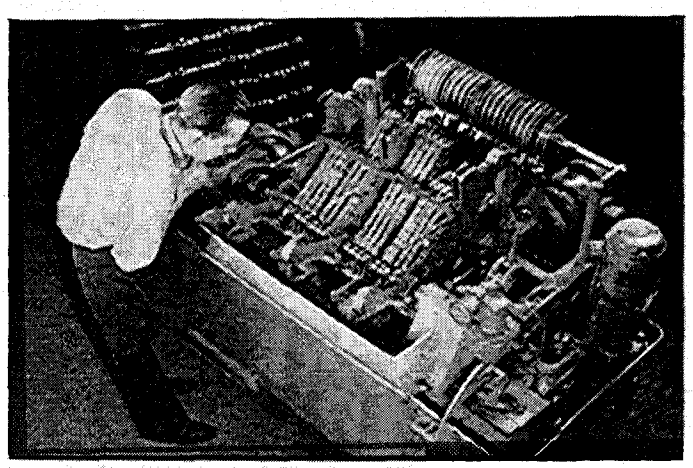

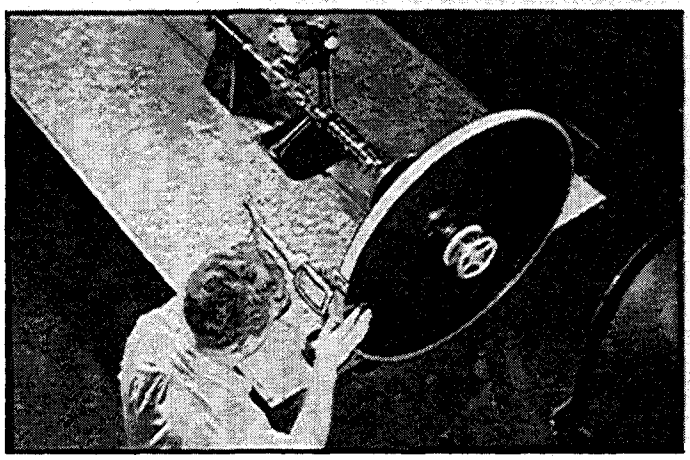

Accuracy of cam contours are carefully checked because of their importance to performance, with a micrometer and wheel graduated into minutes to simplify the reading of very slight irregularities on the cam surface.

The block test provides a carefully covered run in with special oil under constant pressure to remove all metallic particles and foreign matter, and to provide an opportunity for inspectors to check the operation of every part of the completed engine. This relieves owners of the tiresome 500 mile break-in so necessary in other makes of cars.

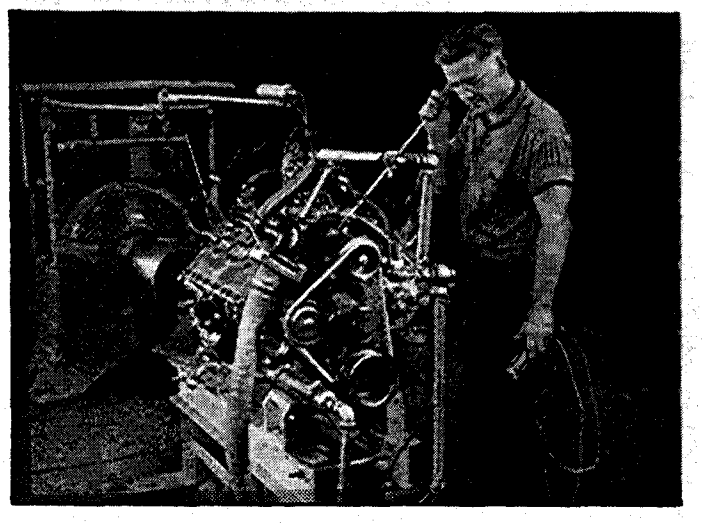

Briefly outlined and illustrated, these are but a few of the craftsmanship operations in every day use at the Cadillac factory. No mention has been made, for example, of transmission and rear axle construction or propeller shaft balance. Reference to precision is necessarily frequent on all of the following pages describing the detailed construction of all parts of Cadillac-La Salle cars because every skilled workman at the plant adheres conscientiously to Cadillac's motto. "Craftsmanship a Creed—Accuracy a Law."

GENERAL MOTORS CORPORATION

Bulwark Behind Cadillac Progress

Cadillac-LaSalle sales leadership is due in large measure to the administrative, engineering, and financial services rendered through Cadillac's affiliation with General Motors.

Largest in the industry, General Motors' very dominance alone lends prestige and buying confidence to people considering the purchase of a Cadillac or LaSalle. Through its own mechanical excellence and engineering superiorities, Cadillac in turn lends prestige and personnel ability to all other General Motors cars. For this very reason, it is of primary importance to the Corporation to insure the continued leadership of Cadillac in the fine car field.



General Motors Building, Detroit, Mich.

Cadillac engineers are in constant contact with General Motors Research Laboratories, headed by one of the industry's most famous engineers, C. F. Kettering. Here hundreds of scientists and engineers, equipped with the finest laboratory devices, are constantly striving to improve the development of the automobile. Cadillac uses these facilities as a consultant service to have their own specific developments investigated.

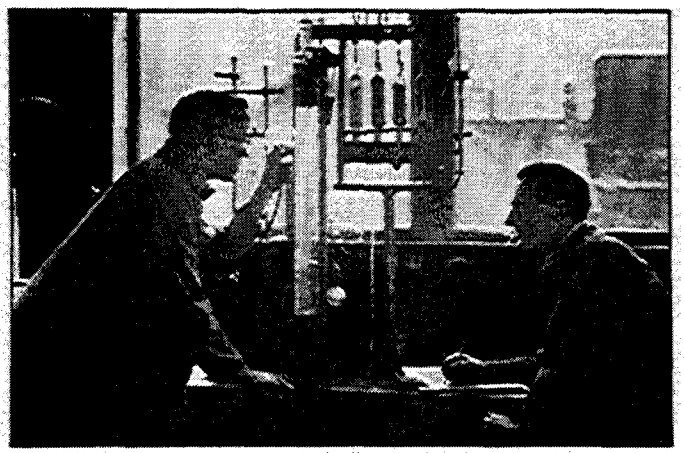

In addition to the table model and the drafting board, experimental Cadillacs and LaSalles equipped with new devices of all

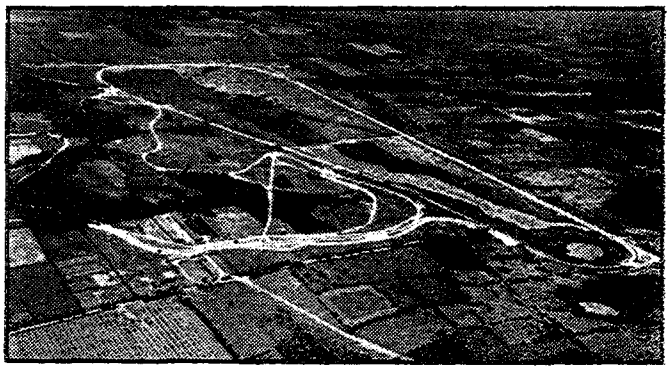

kinds, are continually being tested at the General Motors Proving Ground. New models are driven hundreds of thousands of miles over every conceivable kind of road and under all weather and temperature conditions to determine any possible defect in design before being released for production. In addition, nearly all makes of automobiles, American and European, are purchased annually and subjected to comparative tests with General Motors cars. Only divisional engineers of the Corporation have access to the findings. They are totally unbiased for Proving Ground engineers are interested solely in facts, not in manufacturers. As an ethical policy, their reports can never be used for advertising or comparative sales presentation purposes.

Of equal importance to the Proving Ground for advancements in design is the Proving Ground of Public Opinion. The Customer Research Division contacts hundreds of thousands of automobile owners each year to determine what features they desire in their next cars. Cadillac designers are thus enabled to build Cadillacs and LaSalles *by* and *for* the people who purchase them. This guarantees a high public acceptance before new models even leave the assembly line.



Style leadership and luxurious interior appointments for which Cadillac has always been famous, originate at General Motors Art and Color Section. Cadillac's own designers and Customer Research make recommendations. The Art and Color Department puts these designs in concrete form, final approval resting with Cadillac.

The unsurpassed degree of Cadillac's manufacturing efficiency is the basis for such quality cars at low prices. Economies in mass purchasing and inter-divisional exchange of manufacturing experience afforded by General Motors are additional reasons for greater Cadillac-LaSalle price value.

In addition to product superiority, General Motors provides the Cadillac or La Salle buyer with an unequalled time payment plan. General Motors Acceptance Corporation is the only automobile finance company which is wholly an integral division of a manufacturer. Hence, the objective of G.M.A.C. is to do everything possible to assist in the sale of General Motors cars and not in making a private profit. For this reason G.M.A.C. has pioneered in the development of broader insurance coverage and lower combined financing and insurance costs, and has done most to make it possible for a greater number of people to purchase Cadillacs and LaSalles out of income. Furthermore, the reputation and financial security of General Motors remove purchasers' objection to possible lack of integrity of the financing company so that today a more inexpensive and stable time payment plan cannot be found.

GENERAL MOTORS
INSTALMENT
PLAN

With General Motors' assets totalling over one and one-half billion dollars, the future production continuance of Cadillac and LaSalle is definitely established.

Every Cadillac-LaSalle salesman has, therefore, all these decided sales advantages not available to the salesmen of cars manufactured by independent companies:

Extensive Research Facilities	Consumer Knowledge
Purchasing Economies	Time Buying Service
Manufacturing Advantages	Financial Security

"General Motors" Means "Good Measure"

1939 LA SALLE PERFORMANCE

The superiority of the Cadillac-built V-type eight cylinder engine design over eight in line types is borne out most definitely in LaSalle's superior performance over all other cars in its price class.

Performance means more than accelerative ability and top speed. It means also smoothness, quietness and ease of handling. In all of these features of performance LaSalle is second only to the Cadillacs.

LaSalle's remarkable speed, acceleration and hill climbing ability are due to an unusually high ratio of power relative to car weight. The new LaSalle has 8.1 cubic inches displacement per 100 lbs. This ratio is approximately 15% higher than the average of all eight cylinder automobiles. LaSalle's extra power output provides better acceleration and higher cruising speeds. It also permits low piston travel by means of a low rear axle ratio for engine smoothness, operating economy and longer life.

The inherent smoothness of 90 degree V-type design, precision balance of all operating parts, hydraulic valve silencers, low engine speed, Cadillac engineered engine supports and Hotchkiss Drive all contribute to making LaSalle by far the smoothest and quietest performing car of its class.

LaSalle handling ease is also outstanding. Syncro-matic Gearshift, improved Syncro-Mesh Transmission, new Clutch, Knee Action and Parallel Cross Steering all insure effortless car operation. The new *Controlled-Action Ride* gives LaSalle extraordinary directional stability even at high speeds around curves. Together these features make LaSalle the one outstanding performer of its price field.

LA SALLE APPEARANCE

Again Establishing a New Style Trend

As in 1927 and 1934, LaSalle again in 1939 paces the style parade for the industry. The new LaSalle beauty is neat and trim. It relies upon correct proportions and harmony of smooth, flowing lines rather than upon decorations and radicalism. Unusual distinction is combined with this beauty. *No other car looks like LaSalle.*

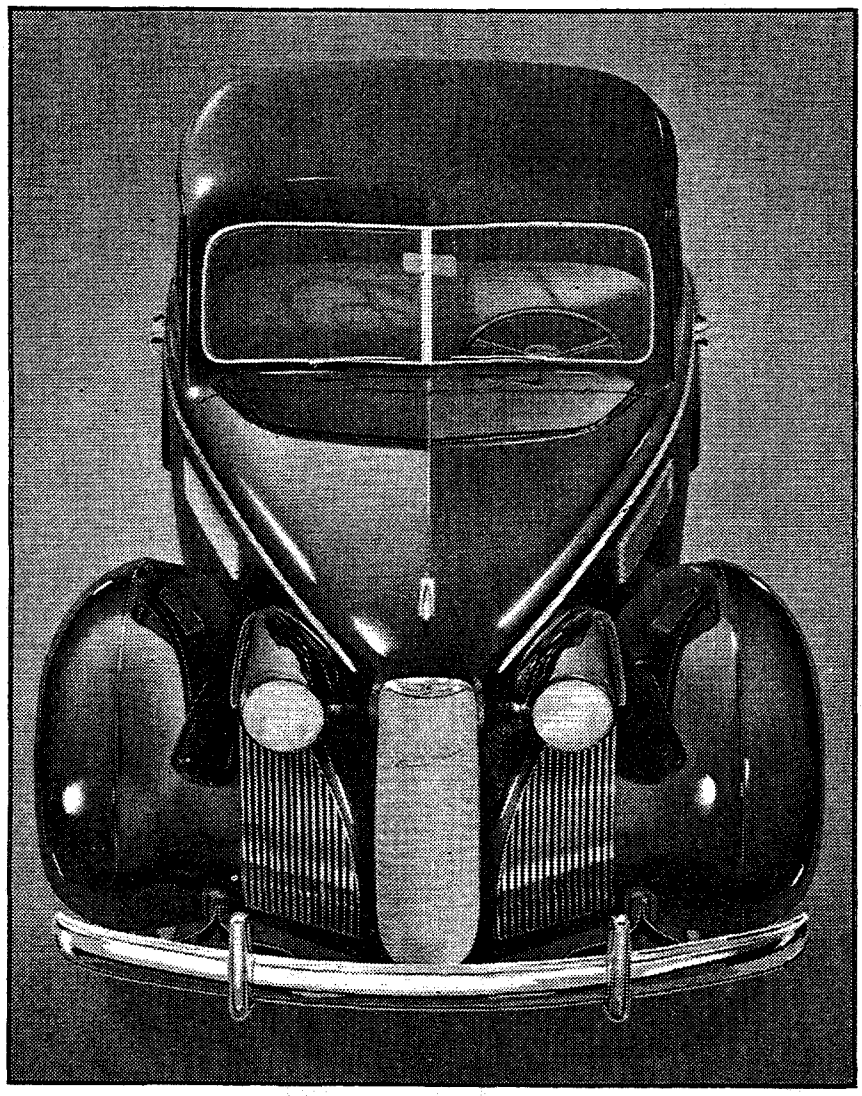

LaSalle has the most distinctive frontal appearance of all 1939 cars.

Front View: The striking lines of the new LaSalle are especially effective at the front view. The new, charac-

teristically narrow radiator grille makes it possible to identify LaSalle from a great distance. The curved die cast grille bars are horizontal and artistically proportioned. Across the front is the LaSalle name in white and gold script. The coat of arms appears at the top. On both sides of the grille long, streamlined headlamps flow into the hood side panels.

Additional radiator cooling grilles are provided in the fronts of the fender catwalks. These are also die cast. Bars are wide and vertically placed. Fenders are of typically massive LaSalle design with windsplits along their centerlines. The new front bumper has ends shaped to blend into the fender contour and carries smoothly curved guards.

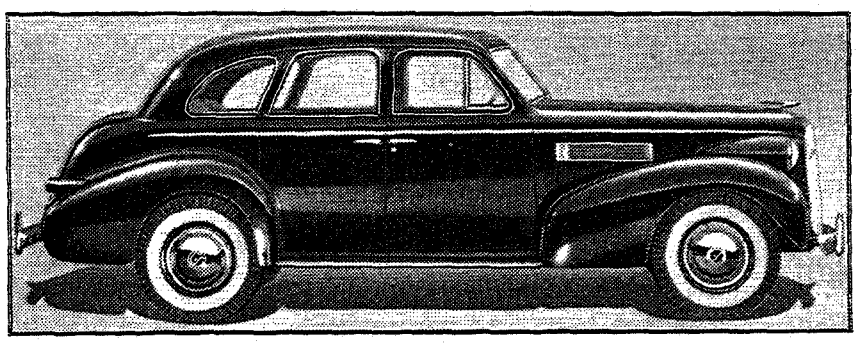

Harmonious lines and balanced proportions are the reasons for LaSalle's new beauty.

Side View: Much lower overall lines give the new LaSalle a fleet, graceful appearance. The lower top, streamlined hood, forwardly inclined rear quarter pillar and the new trunk in which the body lines flow, all contribute to the new speed motif.

The new front opening hood curves downward to the radiator grille. All broken hood lines have now entirely disappeared. The hood is windsplit to match the fender windsplits and carries a new all chrome ornament of characteristic LaSalle design.

A new combination latch and safety catch permits the *hood* to be *raised in one easy upward motion*. The

safety catch holds the hood down firmly in the event the operator fails to pull down the ornament. Also, new hinges supporting the hood improve operation.

New hood louvre panels and new hub caps bear the "LaS" monogram for identifications.

The *windshield* and *all windows* are now *outlined* with *chrome reveals*. This costly feature has never been used on cars of this price class before and contributes greatly to LaSalle's exclusive fine car appearance.

The V-windshield flows into the smooth Turret Top at a 39 degree angle. The greatly increased height and width of windshield and all windows are noticeable.

Concealed door hinges represent an important step forward in body design. They *improve appearance and reduce wind noise*. Only the lower front door hinges remain exposed and these are almost hidden behind the front fenders.

Outside door locks are now *on both front doors*. This adds greatly to convenience in unlocking the car. Locks are placed below the handles and have spring actuated covers to exclude dirt and moisture. One piece die cast door handles are also new and are in-curved for safety.

Running boards are optional on all body types at no extra charge. They are included as standard equipment unless specifically ordered without. The removal or addition of running boards may be easily made. Running boards are rubber covered, stainless steel trimmed, and are separated from the fenders at both ends. If running boards are not desired, a panel of three horizontal stainless steel strips decorates the lower portion of the body below the doors. Especially processed rubber guards, which have a smooth black finish, protect both rear fenders from gravel thrown by the wheels.

Rear View: The new LaSalle from the rear presents an unusually smart, ground-gripping appearance. Body, trunk, fenders and tail lamp all blend into the smooth,

flowing lines. In particular, the rear fenders appear an integral part of the body itself. The new rear tail lamps are mounted to the body just above the fenders. The lamps are of projectile shape and each carries a reflector disc in the center of the lens for safety.

The license plate is carried in the center of the trunk lid below a new V-8 emblem. The plate is illuminated

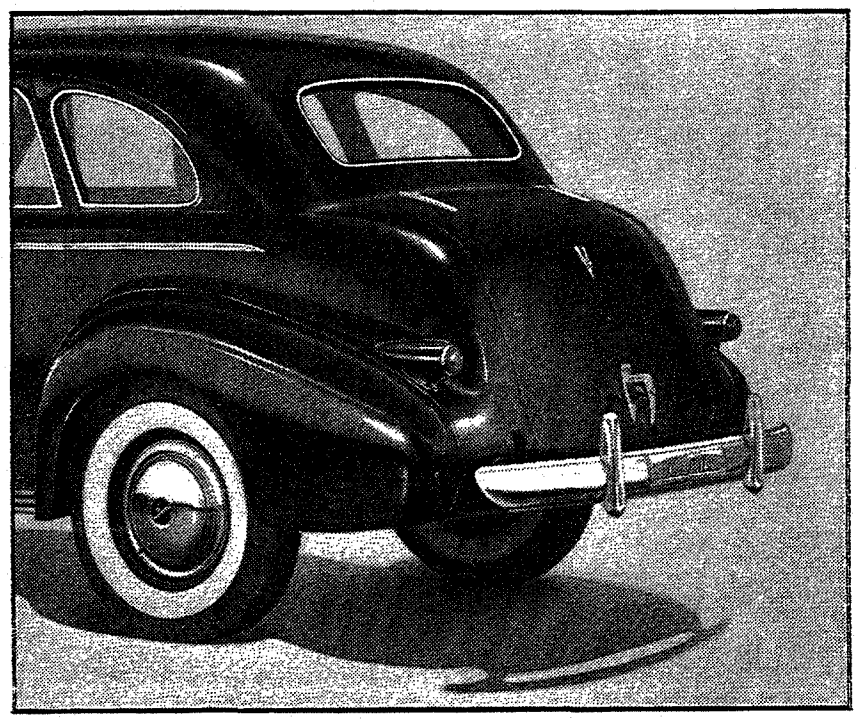

LaSalle Rear View

by a white light integral with the trunk or deck lid handles. This new combination design adds greatly to rear appearance.

A *gravel deflector across the rear of the body* had been added as standard equipment. The deflector protects the rear of the body from flying stones on gravel roads at high speeds.

New rear bumpers carry the name "LaSalle" in script. The new 1939 LaSalle is now identified front, rear and to the sides as a beautiful, quality-built car by Cadillac.

Large Storage Spaces

All new LaSalle sedan types, including the Convertible Sedan, have in-built trunks at no extra charge. Trunk *luggage capacities* are extraordinarily ample for long distance touring. Trunks and deck storage spaces are *tailored* with *new rich lining and carpeting* of heavy serge. The new Convertible Coupe has two enclosed opera seats which, in the discontinuance of the rumble seat, provides a large rear deck storage space. Another added feature of Two Coupe and Convertible Coupe is a compartment in the rear deck floor with a hinge lid. This is useful for storing tools and other articles.

A *light*, attached to the inside of the trunk and deck lids on all Cadillac-LaSalle models, *automatically illuminates storage space interiors*. This is a noteworthy new feature for owner convenience.

LA SALLE INTERIORS

Roomier and More Luxurious

The new LaSalle features greater interior comfort, roominess and luxury than has ever before been attained in a car at or near its price. The new body is larger in all dimensions. The overall length of the car has been *increased one inch, and rear interior legroom three inches for passenger comfort.* Wheelbase is 120″ which greatly improves parking ease and maneuverability in city traffic. This is another phenomenal feat of Cadillac engineering. The new LaSalle represents the most efficient use of body space of any automobile.

Ease of Entrance: Higher, wider doors are afforded by 1¾ inch lower floors, 1⅝ inch longer body and relocated pillar posts. The height from the ground to the body floor has been reduced to 14⅝ inches.

The Syncromatic Gearshift permits ease of entrance for the driver from either side of the car.

The hypoid rear axle, transmission extension and Syncromatic Shift control make it possible to secure the unusually low floors without resorting to high transmission and propeller shaft tunnels. In LaSalle only low crowned surfaces are above the floor level.

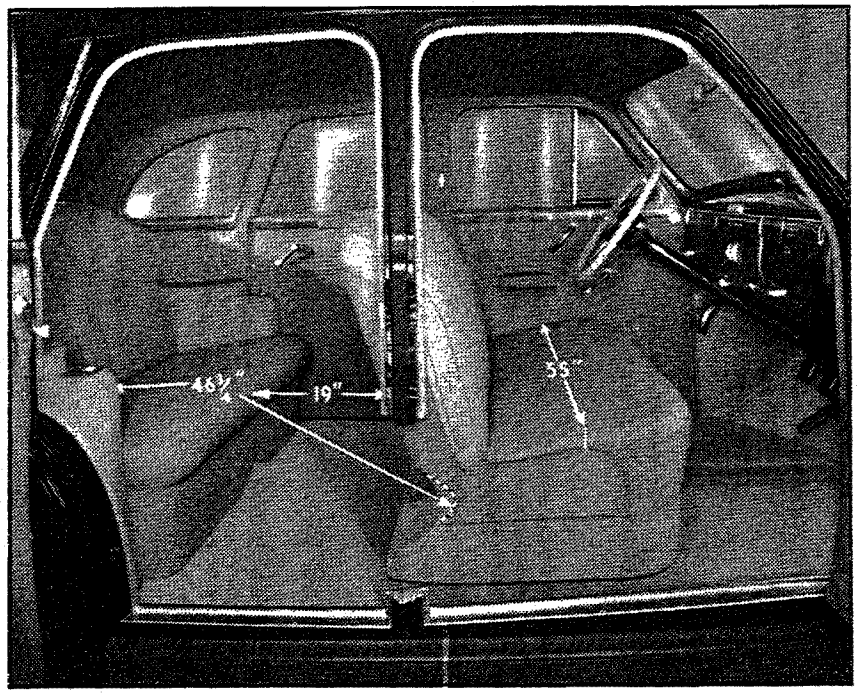

Practically all LaSalle interior dimensions have been increased. Above dimensions taken with front seat in forward position.

Room: In the rear interior a three-inch increase in legroom has been accomplished by increased tonneau length and a more deeply recessed footrest. Also the footrest has been carefully redesigned to give the most comfortable foot position.

In the front compartment seats are 1¾ inches wider at the hips, 1¼ inches wider at the shoulders.

Headroom has been increased 1¼ inches in the front compartment and ¼ inch in the rear.

The V-8 engine is the basic reason for improved efficiency in usable body space. If a straight-eight engine of equal displacement as the new LaSalle were used, a wheelbase five or six inches longer would be necessary to provide LaSalle's roomy dimensions.

Vision: Safety is increased and motoring enjoyment greatly enhanced by much broader vision from the new LaSalle. *Glass areas have been increased 32% at the windshield,* and *side window* areas increased an average of *25%*. The rear window is undivided, improving the driver's vision to the rear.

More important than increased LaSalle glass areas, however, are the locations of these areas and the removal of vision obstructions. Windshield and windows are higher relative to the seat cushions. This permits a

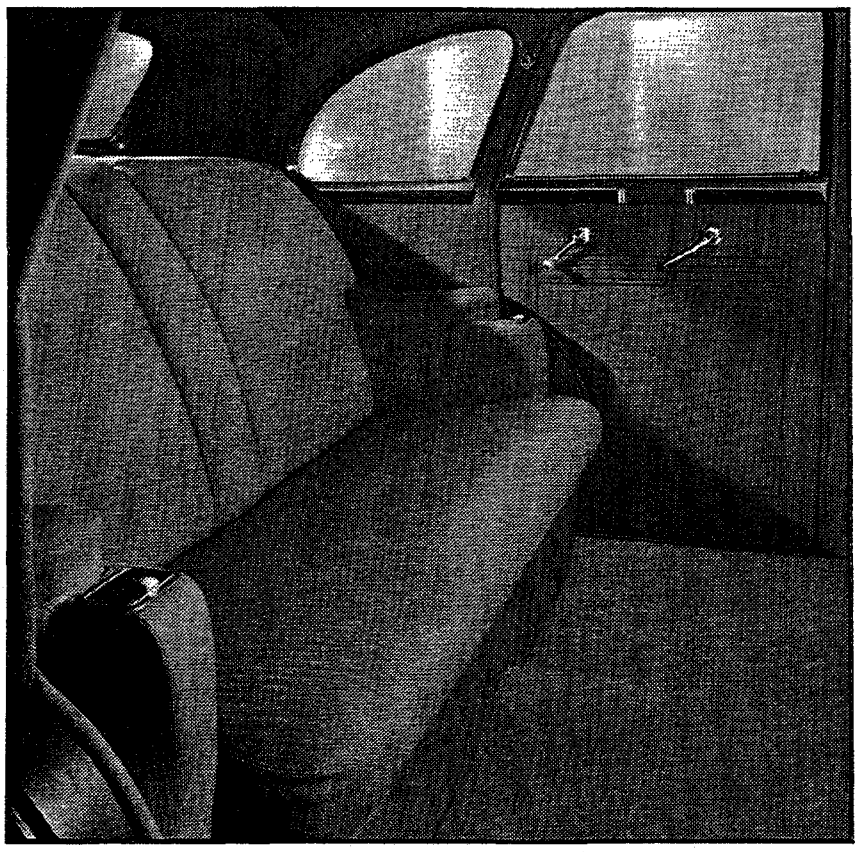

Richly appointed LaSalle rear interior.

view upward into an area which is restricted in conventional cars. Also the glasses in the LaSalle windshield and windows penetrate further into all four corners. *Windshield pillar widths* have been greatly *reduced,* increasing driving vision at these points by 25%. The apparent obstruction of the pillar is now only

1¾ inches. Although the reduction in vision obstruction has been accomplished by narrower windshield pillars, the structural strength and rigidity of the pillars have been maintained.

Safety is increased not only by the greater height and breadth of forward vision but by a lower hood and a sharply narrow hood at the front. More of the road close to the car can be seen.

Luxurious Appointments: The entire LaSalle interior is luxurious to a degree customarily expected in the Cadillacs. There is an atmosphere of restful roominess and spaciousness.

The new interiors have been richly appointed and trimmed in reserved good taste. Four lustrous, all-wool cloth options are available in brown or gray pattern

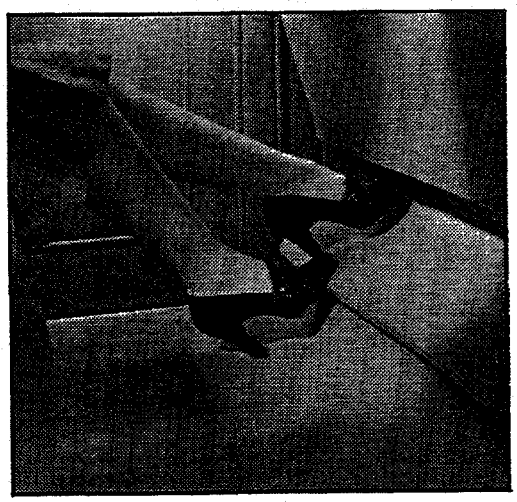

The rear compartment recessed foot rest is redesigned for a more natural and comfortable foot position.

cloth; tan or gray ribbed broadcloths. Convertible styles have, in addition to tan and gray ribbed broadcloth, six color options in genuine leathers.

All seats and seat backs are in a plain trimming style. *The tops of front seat arm rests are covered in leather* for durability and enduring neat appearance.

New garnish mouldings and panels lend a neat finished appearance. The mouldings are finished in a medium brown color, while panels are in light ribbon walnut.

All hardware is new in a pleasing design of bright chrome and colored tenite. The hardware is placed close to the door panels, which leaves more room in the body interior.

The dome light is of a rectangular classic design with switch on the right center pillar.

Inside locks have been *added to all closed car ventipanes* to prevent theft. These consist of inconspicuous sliding bolts. They make it impossible to force the ventipane open from the outside. The control for the new sliding rear quarter window is devised so that the window is locked in any position. Inside door locks are operated by push buttons projecting through the garnish mouldings.

An important new standard appointment is the *rear center arm rest.* It is softly upholstered for comfort and

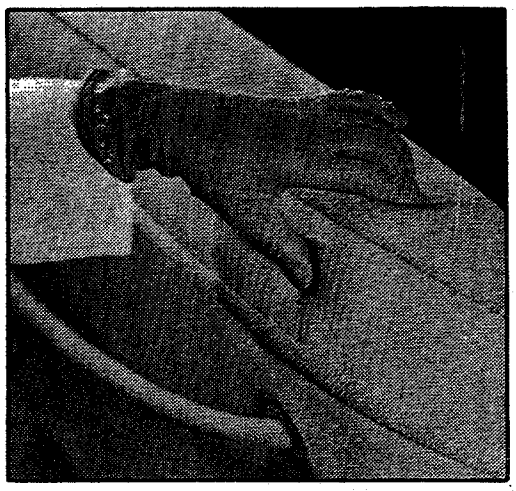

A cushioned front seat back provides safety for rear seat occupants. The robe cord is covered to match the upholstery.

divides the rear seat into two spacious lounge chairs.

Additional appointments include ash receivers in each side arm rest of the rear compartment.

In the front compartment two impressions are instantly received. The first is that of unusual roominess. The seat is wide and the instrument panel is farther away from the seat than in conventional cars. The high, wide glass areas give a spacious view.

The second impression is that of an unusually neat, clean interior. The smoothly curved instrument panel, Syncromatic Gearshift and under instrument board handbrake lever eliminate customary impediments.

Convenience has been given much study. The *Syncromatic Gearshift* and handbrake lever are *more easily operated.* The *cowl ventilator handle* is now in front of the driver to the right of the steering column *within immediate reach.*

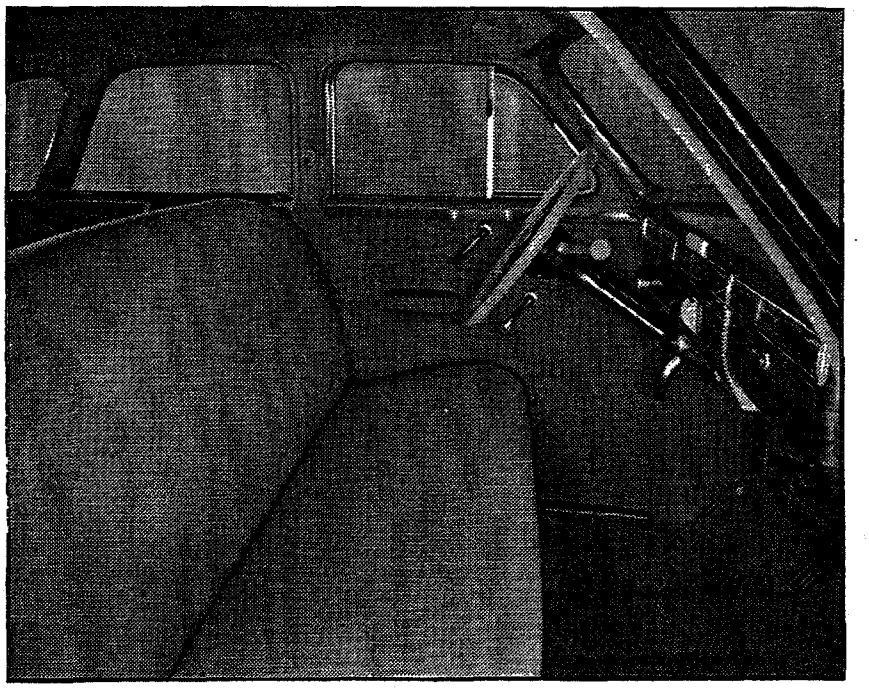

Roomy LaSalle front compartment.

The *front seat may be easily adjusted* by releasing the *locking lever* now placed *at the front of the front seat* below the driver. From full rearward position the front seat cushion moves forward a maximum of four inches while the top of the seat back moves forward five and one-half inches. Thus the seat comfortably accommodates even the very tall or short person.

A *new front seat construction* offers several advantages. The seat back frame is now tubular steel. This provides

a more rigid structure and assists in securing a neat trim around the top of the seat back. This design also permits the use of deeper cushion springs which add to comfort. Another improved feature is the addition of a space below the seat and between it and the floor. Warm air from the front compartment heater can now pass below the seat, raising the rear floor temperature. In summer ventilating air passes under the seat, cooling both it and the rear floor.

The rear view mirror is now more conveniently and neatly mounted upon the windshield divider. The entire mirror may be raised or lowered three-quarters of an inch to suit the driver's height by rotating it completely around on its eccentric mounting.

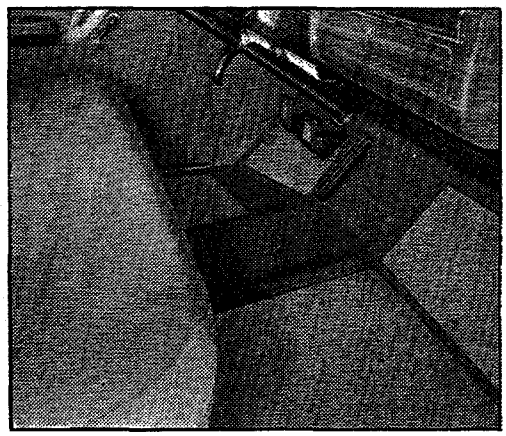

The LaSalle front compartment is clear and unobstructed. A new carpet consists of heavy pile on a rubber base which forms pads at points subject to wear.

New sunshades, cloth covered and leather bound, are 2½-inches wider than before. Clever new sunshades for Convertible types accomplish a dual purpose. When the top is raised the sunshades are employed in the usual manner but when the top is lowered the shades may be swung upward to act as wind-breakers.

Safety Instrument Panel: One of the most beautiful and most practical instrument panels ever designed for a motor car is used in all new Cadillacs and LaSalle. While width and color of the finish varies with each new

model, design and construction are uniform. The new panel is a luxurious highlight of each model interior.

The LaSalle panel is light ribbon walnut. A narrow curved glass cover extends horizontally completely across the panel beneath which are the instruments. These are divided into three groups. Immediately in front of the driver is a large speedometer flanked by the engine temperature gauge and battery charge indicator on its left and the gasoline and oil pressure gauges on the right. Immediately above the speedometer is the headlamp beam indicator which glows red whenever the driving beam is in use.

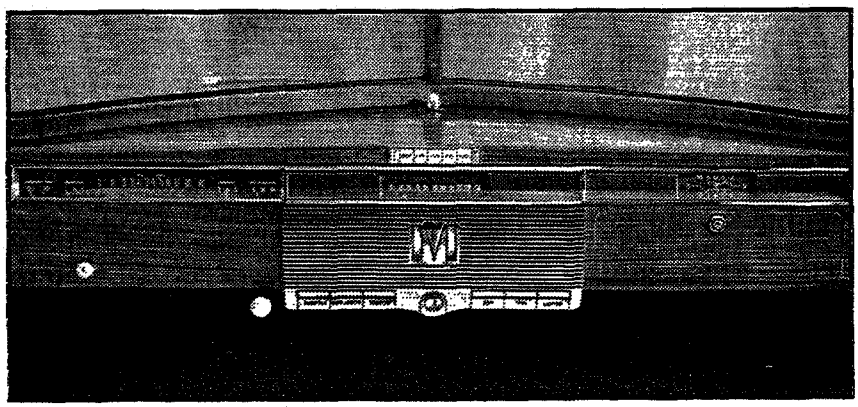

New, clear-vision, safety instrument panel

Much research has been expended in selecting a *background color* for the white numerals. The color, much darker than usual, *greatly improves visibility for both day and night driving, eliminates glare and harmonizes beautifully with the body interiors.*

The engine temperature gauge is now electrically operated for positive insurance of accuracy.

The *speedometer reset knob* is most *conveniently located.* The knob is just to the right of the steering column below the panel within easy reach of the driver.

The new steering wheel has very widely spaced spokes which afford a clear view of the instruments.

The center portion of the glass covered strip carries a removable panel with a "Cadillac" or "LaSalle" decoration. This decoration is removed when the radio is installed. Above the radio dial is a plastic decoration which is replaced by the station selector buttons for automatic radio tuning. A chrome die cast radio speaker grille occupies the entire center portion of the panel below the glass strip. To the extreme right the glass strip covers the *electric clock—standard equipment on LaSalle* for 1939. The clock reset knob is reached from inside the glove compartment.

All of the panel below the glass strip is smoothly curved. Its surface is not broken by the usual miscellaneous assortment of controls. At the extreme left of the panel, convenient to the driver's left hand, is the headlamp switch. Its very location insures safety. At the extreme right is the *glove compartment* with flush type lock lid. The compartment is *automatically illuminated* whenever the door is opened.

All controls except the headlight switch are recessed for safety in the lower edge of the panel below the radio grille. They are finished in light color. All are plainly marked so that they may be identified at a glance. The ignition switch is recessed in the center so that the key will not project. It is illuminated by an improved lock light. To the right are the ash tray and cigar lighter; to the left the starter, instrument light switch and throttle. The throttle, cigar lighter and ash tray are pulled out by safety type pulls built into their front faces. The starter is operated by pushing inward. The three-way instrument light switch affords illumination to the instruments and clock; to instruments, clock and ignition lock; or no panel illumination, as desired.

SUNSHINE TURRET TOP

The new Sunshine Turret Tops add much to the pleasure of motoring. Sliding roofs were first introduced to quantity production in this country by General Motors. They provide many of the advantages of the convertible cars, yet retain the structural strength and safety of the closed car bodies. The new top greatly increases interior ventilation which will be greatly appreciated in warm weather. It is especially desirable for touring through scenic country.

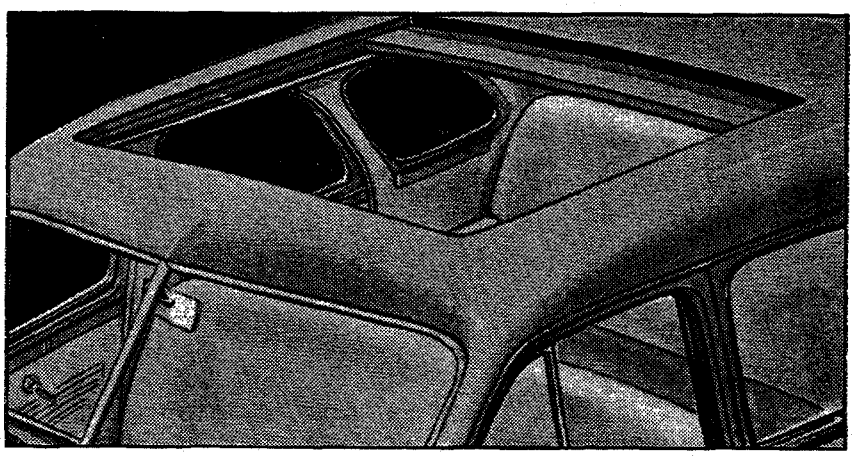

LaSalle Sedan with new Sunshine Turret Top.

Sunshine Turret Tops are optional at extra cost on the LaSalle 5 Four-Door Touring Sedan and 5 Two-Door Touring Sedan. The sliding panel extends nearly the full width of the roof and from just behind the windshield to a point between the front and the rear compartment. The panel is easily released by a locking handle. The sliding panel may be easily operated by one hand and may be locked in any position. Gutters, drains and rubber seals around the roof opening prevent entrance of water and prevent air leaks when the roof is closed. Careful design has insured a sturdy, foolproof construction.

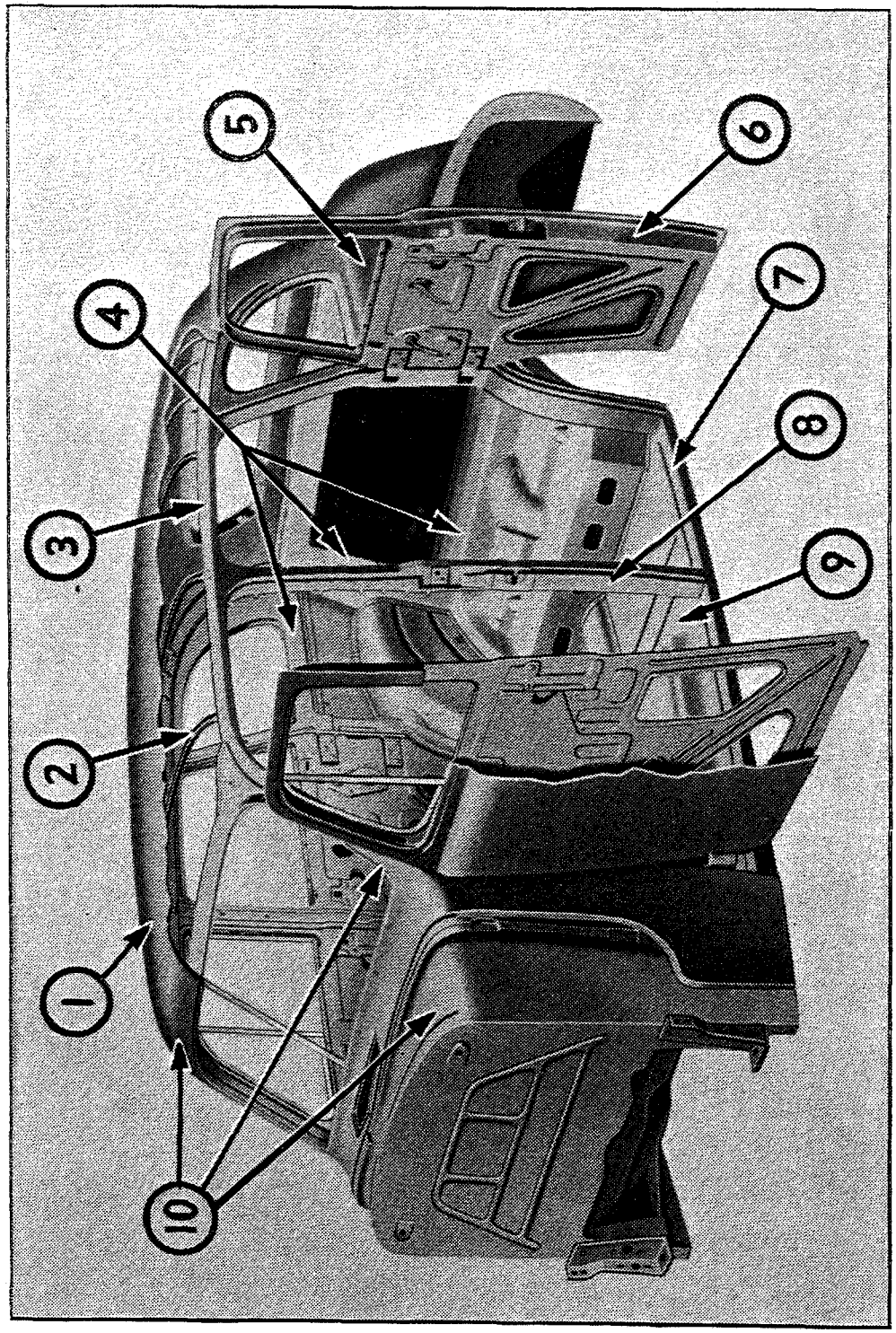
5
6
4
7
8
3
9
2
1
10

UNISTEEL TURRET TOP BODY

Passengers Ride Within a Tube-Like Unit of Steel

1. One-piece solid steel top: permanent, beautiful.
2. Sturdy "U" shaped steel roof bows.
3. Steel roof rail welded to inner steel body framework.
4. Steel braces welded to sides of inner body structure joined by heavy steel cross member below rear window frame.
5. Steel body panels reinforced with steel.
6. Steel door panels welded together.
7. Steel rocker panels welded to sides of underbody.
8. Two "U" shaped steel bars welded together form each pillar post.
9. Steel floor welded integral with body.
10. Cowl structure one complete unit of reinforced dash, windshield posts and header panel welded to Turret Top.

Thus the body is a structural frame of steel in its own right and is joined to the unusually heavy chassis frame by heavy, insulated bolts.

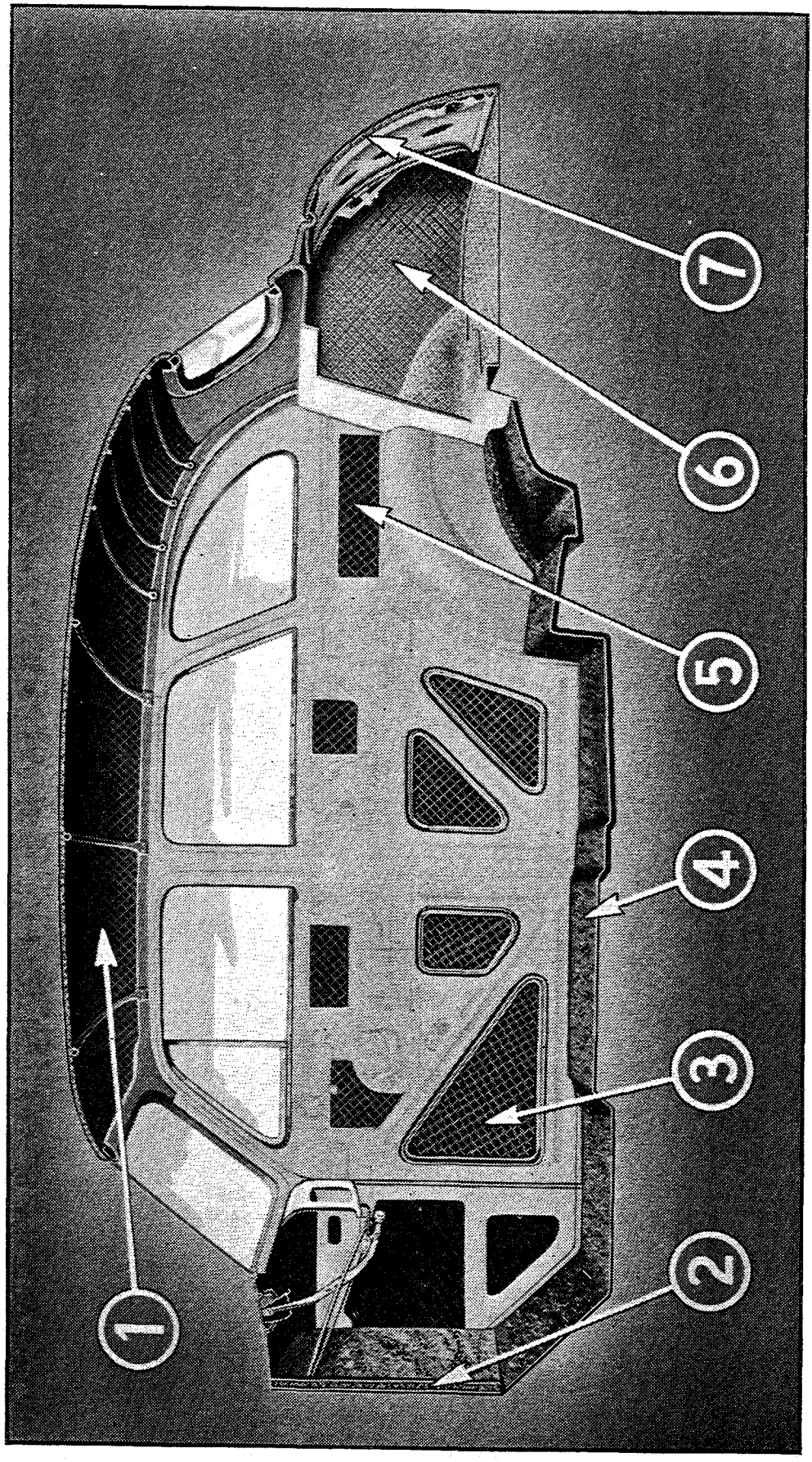
7
6
5
4
3
2
1

IMPROVED INSULATION

LaSalle's Steel Body is Insulated at Every Point for Quietness and Comfort

1. Turret Top has finest combination of heat, cold and sound insulation available: thick pad of asphalt impregnated rag felt; large dead air space; heavy wool headlining matches upholstery.
2. *Dash and toe board covered with four double layers of asphalt impregnated felt. Each double layer consists of one plain and one waffled layer. Interior finished with leatherette for neat appearance.*
3. Door panels lined with asphalt impregnated rag felt.
4. Using sound amplifying equipment body engineers have located sources of noise transmission. They have scientifically indented steel floor, thereby eliminating them. Floor tightly fitted with heavy layer of impregnated felt to which is added a thick pile carpet.
5. Rear quarter panels lined with asphalt impregnated rag felt. Dead air space provided. Interior side wall of heavy wool cloth matching upholstery.
6. *Inner sides and front of trunk lined with heavy serge.*
7. Trunk lid covered with thick pad of rag felt impregnated with asphalt.

Heavy insulating pads interposed around body bolts prevent any metal-to-metal contact between body and frame, thus eliminating body rumbling inherent in cars with single unit frames.

Weatherproofing and Sealing

Every precaution has been taken to effectively seal the LaSalle body from dust, water and drafts. Doors, sills, windows and ventilators have rubber lacings and heavy weather stripping. The windshield is tightly sealed by a plastic cement applied between the body channel, rubber gaskets and glass.

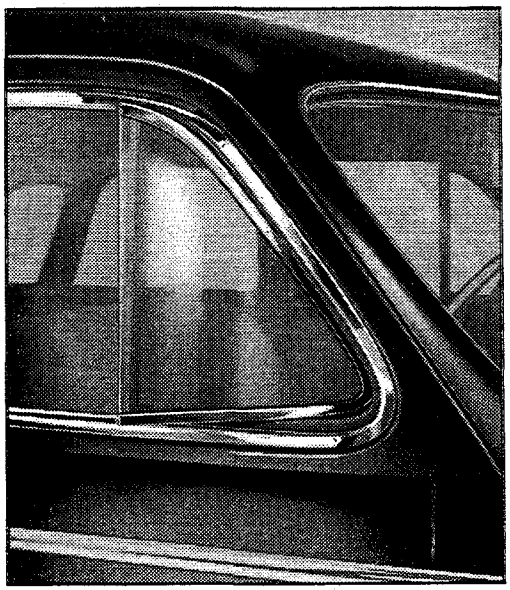

Roof mouldings and ventipane shields protect passengers from dripping water.

Steel drip mouldings are welded to the sides of the Turret Top and down the sides of the windshield pillar posts. Drip shields over each front ventipane extend far down the front of the opening. These prevent annoying dripping water upon passengers entering or leaving the car.

The *tubular wind seals* used in the door frames are redesigned to *assure draft free interiors* during cold weather.

The screened cowl ventilator is tightly sealed by a rubber gasket carried in the rain trough to prevent water from seeping into the front compartment. An over-center locking mechanism is operated by giving the control handle an additional pull after closing the ventilator.

This keeps the cowl ventilator securely closed to prevent leakage and drafts and in addition renders anti-theft protection.

All floor openings around the foot pedals are carefully sealed against heat and cold. *New rubber seals* fit tightly around the pedals. Heavy pile carpets on both the front and rear compartment floors provide additional protection as well as richer appearance.

When so equipped, running boards are separated from the fenders at both ends. This prevents the accumulation of water and dirt which dampens and soils shoes and floor carpeting. Every attention has been given the new LaSalle to make it soundproof and weatherproof.

Bonderizing and Finishing

The enduring lustre of Cadillac-LaSalle's beautiful finish is due in large measure to the chemical process of bonderizing. By treating all sheet metal and fenders with this bath a primer is provided to the clean, bare metal which prevents chipping, cracking and peeling of the Duco from shock and vibration. Bonderized protection is many times more rust resisting than finish applied directly to the metal surface, yet this process is rarely used by even other fine car makers.

Extreme care is taken in the finishing process to avoid thin spots and fading of any of the new Cadillac and LaSalle color combinations. Six coats are each applied separately both up and down and across the surface for thorough, even thickness and coverage.

After each coat the finish is allowed to bake thoroughly in specially designed air tight rooms under even temperature. It is then oil sanded and polished. Each of these four steps is taken before one coat is completed. Skilled inspectors measure paint thickness with special gauges as an additional precaution for uniformity.

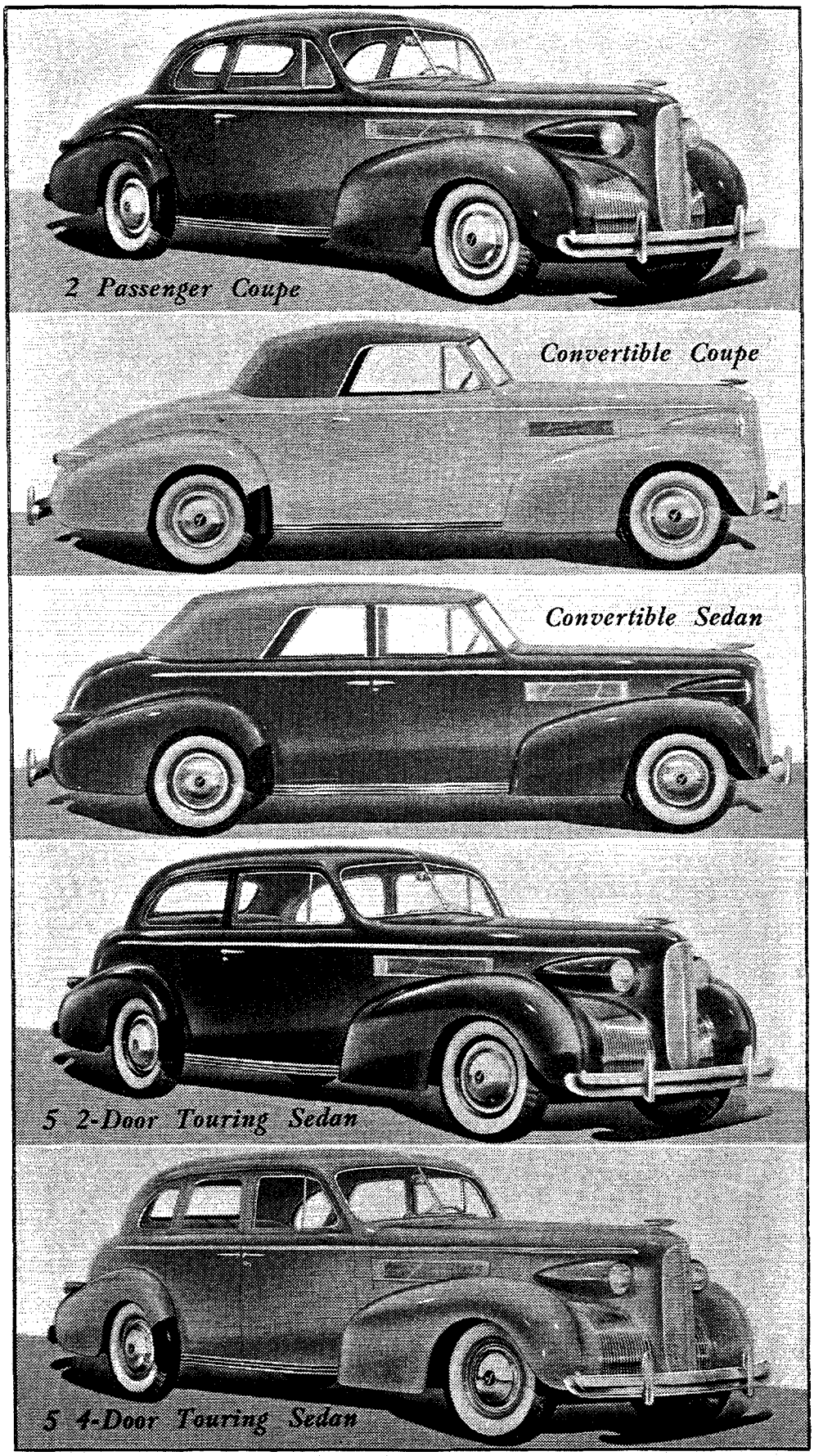
2 Passenger Coupe
Convertible Coupe
Convertible Sedan
5 2-Door Touring Sedan
5 4-Door Touring Sedan

LA SALLE

Interior Dimensions

	2-Pass. Coupe	Conv. Coupe	Conv. Sedan	5 2-Door Touring Sedan	5 4-Door Sedan
Front Seat Width (Hips)	54¾"	54¾"	54¾"	54¾"	54¾"
Rear Seat Width (Hips)			47"	47"	47"
Front Seat Width (Shoulders)	55"	55"	55"	55"	55"
Rear Seat Width (Shoulders)			48¾"	53½"	53½"
Front Seat, Cushion to Floor	15½"*	15½"*	15½"*	15½"*	15½"*
Rear Seat, Cushion to Floor			14½"	15½"	15½"
Front Seat Depth	18"	18"	18"	18"	18"
Rear Seat Depth			20"	19¼"	19¼"
Dash to Front of Front Seat	26¾"*	26¾"*	26¾"*	26¾"*	26¾"*
Front Seat Cushion to Clutch Pedal	18½"*	18½"*	18½"*	18½"*	18½"*
Front Seat Back to Front Rear Cushion			13"*	14¾"*	14¾"*
Legroom—Rear Seat Back to Foot Rest			41½"	42¼"	42¼"
Steering Wheel to Front Seat Cushion	6"*	6"*	6"*	6"*	6"*
Steering Wheel to Front Seat Back	13¾"*	13¾"*	13¾"*	13¾"*	13¾"*
Headroom—Cushion to Roof—Front	37¼"*	37¼"*	37¼"*	37¼"*	37¼"*
Headroom—Cushion to Roof—Rear			37¼"	35½"	35½"
Headroom—Floor to Roof	49 7/16"	49 7/16"	50 1/16"	49¼"	49¼"
Inside Maximum Body Width	56"	56"	55½"	56"	56"
Front Door Width	44 5/8"	44½"	34"	46"	35"
Rear Door Width			29"		29¼"
Width Over Front Fenders	74"	74"	74"	74"	74"
Width Over Rear Fenders	71¼"	71¼"	71¼"	71¼"	71¼"
Overall Height, Loaded	66½"	66"	66"	66¼"	66¼"
Overall Length, Bumper to Bumper	202 9/16"	202 9/16"	202 9/16"	202 9/16"	202 9/16"
Trunk and Deck Capacities (cu. ft.)	22.6	18.1	16.6	21.7	21.7

*Dimensions taken with front seat in full rearward position. Seat may be adjusted 4" forward.

CADILLAC "61"

America's Fastest and Smoothest Eight

Again Cadillac establishes a new all-time high record for value in the $1500 range with the new Cadillac "61." This lowest priced model to bear the greatest fine car name provides more luxury, comfort, roominess and performance than has ever been attained in this class before.

Incorporating many of the immensely practical features originated for the first time last year in the Sixty Special, the new "61" has an unusually low, dynamic appearance entirely its own. Its new frontal grille stamps it a member of the 1939 Cadillac family. From every angle and in every detail the new "61" reflects true fine car quality.

The new Cadillac "61" continues to hold the title of its predecessors. It is America's Fastest and Smoothest Eight Cylinder Stock Car. In these respects it is only excelled by the Cadillac Sixteen. Its fundamentally correct 90 degree V-8 engine of 346 cubic inch displacement provides an 8.6 ratio of displacement to car weight. This tremendous available power permits spectacular acceleration and at the same time makes possible low engine speed at high car speeds. This results in greater operating economy and longer engine life than any other engine of comparable size.

Extreme smoothness and quietness are also achieved by this low engine speed. In addition, the Syncro-Flex Flywheel, notable Cadillac "First" of 1938, imparts a silky smoothness never previously attained. The new Cadillac "61" represents an outstanding contender for *value* in 1939.

CADILLAC "61" APPEARANCE

Front View: All Cadillacs for 1939 are identified by their singularly modern frontal appearance. Yet the grilles for each model differ as to height and width.

The "61" has three die cast radiator grilles. The central or radiator grille proper is flanked by two fender grilles mounted in the fender catwalks. The central grille is lower and is wide at the top, tapering grace-

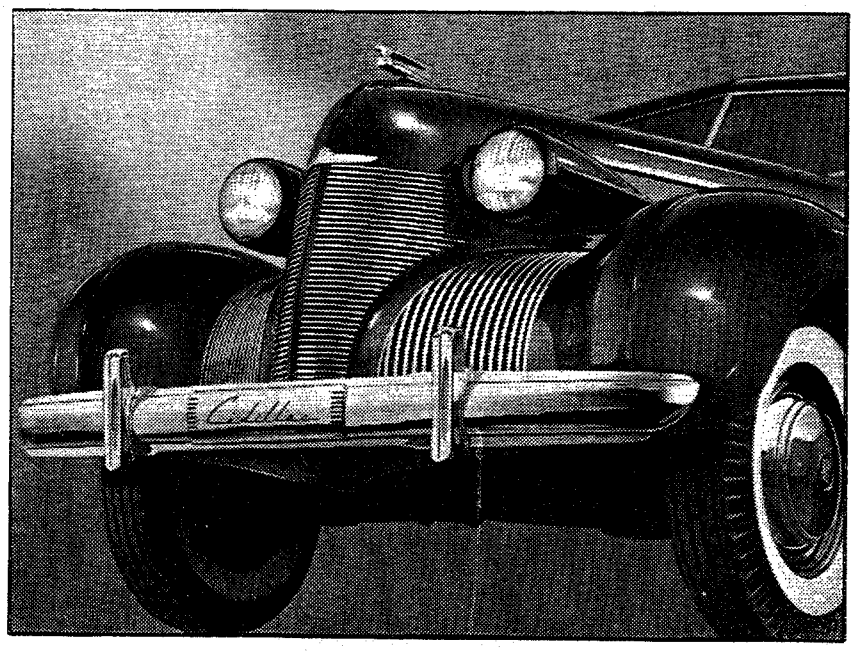

Cadillac "61" Front View

fully narrower toward the bottom. As viewed from above, this grille is sharply veed and as viewed from the side it slopes forward toward the bottom in a pleasing convex curve.

The radiator ornament is lower to increase the impression of speed in appearance. The ornament also incorporates the front opening hood latch. A new hood support and a new hood latch greatly increase ease of raising the hood.

Much care and attention has been given to insure neat assembly. The front opening hood, the integral radiator casing and forward portion of the hood side

panels and a new method of assembling all of these parts with the fenders as a unit all achieve neat appearance.

Narrow strips of the hood side panels curve downward between the central grille and the fender grilles. Two lines are thus formed which sweep upward and outward to the rear between the hood side panels and the fenders, forming two graceful curves having the shape of the water curling from the sharp prow of a fast boat. This is a speed motif emblematic of the "61's" agility and swift smoothness.

Fenders are of typical Cadillac shape with windsplits along their centerlines.

Headlamps are much longer and fully streamlined. Their lines merge into those of the hood side panel. The speed motif is further carried out by a horizontal rib along each headlamp centerline.

New bumpers curve at the ends to conform with the fender contours. The "Cadillac" nameplate provides conspicuous identification.

Side View: The new Cadillac "61" is most distinctive from the side because of its unusual lowness, increased length, long streamlined hood and chrome outlined windows. It resembles no other car, yet has conspicuous Cadillac quality lines.

New die cast hood louvres bear the Cadillac name and new hub caps the crest. Fenders are long, massive and typically Cadillac.

The body belt forms a horizontal line from the hood into the integral trunk at the rear. A new stainless steel belt moulding is mounted below this outward curve. Door hinges are concealed at all points except at the lower front door. Exterior hardware is new, curving smartly close to the doors for safety.

Narrow chrome reveals on all windows provide a distinguished modern style note in the new "61" side view. These reveals are very expensive and have never

been used before on a car in the "61" price class.

Running boards are optional without charge. They will be included as standard equipment unless specifically noted. Running boards are rubber covered, trimmed with stainless steel and separated from the

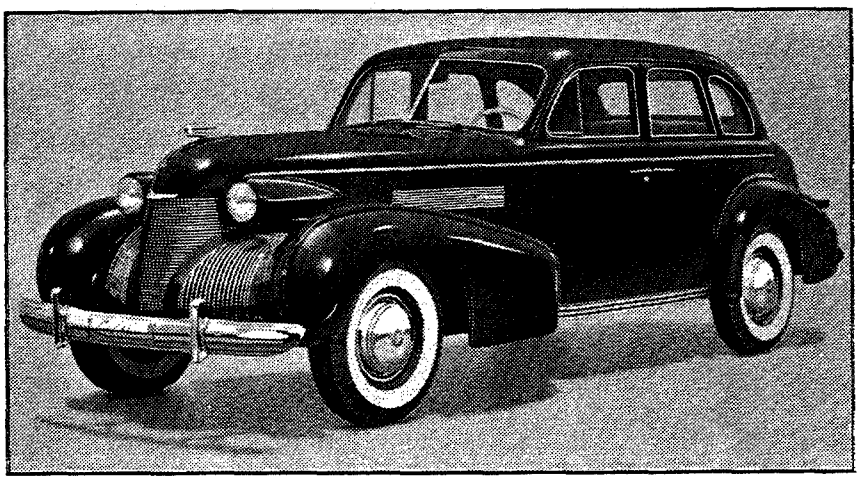

Cadillac "61" Side View

fenders. By curving the rear edge of the running board around the rear fender a particularly neat appearance is realized. Without running boards a panel of three stainless steel strips decorates the valence below the body. Each rear fender is protected by a guard made of especially processed smooth black rubber.

Rear View: The new body flares outward at the sides of the trunk to meet the narrow rear fenders. This speed motif is similar to the contour of wings attached to the fuselage in a modern monoplane. New projectile shaped tail lamps are mounted upon this contour.

A combination license plate support, light and trunk lid handle is similar to that of the larger Cadillacs. The trunk is large and beautifully tailored in interior appearance. A large, undivided rear window provides greater vision to the rear for the driver.

The typical V-8 emblem and "Cadillac" name on the bumper insure rear identification.

CADILLAC "61" INTERIOR

Roominess: The long, low graceful modernity of the new "61" is due in large measure to a 1¼ inch lower overall height and an increase of 5½ inches in overall length. *Headroom*, however, has been actually *increased* since the floor has been lowered 1¾ inches, more than offsetting the reduction in overall height.

Despite lower floors, there are no objectionably high floor tunnels in front or rear compartments. Superior Cadillac design of the transmission, transmission extension and rear axle has permitted very low floors which are practically level.

Lower floors aid particularly in *ease of entrance*. The step from ground into the car is only 14⅝ inches, about 2 inches less than in conventional cars. The increased floor-to-roof dimension further facilitates ease of entrance by permitting much higher, wider doors. Relocated windshield and central body pillars are a third factor in increased entering ease. These pillars have been moved forward, increasing doorway headroom, shoulder room and footroom.

Cadillac's introduction of under-instrument panel handbrake lever and Syncromatic Gearshift are additional factors affording comfortable entry into the front compartment from either side of the car.

These two features also made six passenger capacity in comfort and safety a definite reality for the first time last year. Now the *front seat width* is still further *increased by 1¼ inches to a total of 55 inches*. This increase provides greater freedom for the driver and comfort for passengers.

Rear compartment legroom has been increased three inches to the ample length of 46¾ inches with the front seat in full forward position. Also, the footrest recessed

in the front seat back has been carefully designed to provide a comfortable foot position.

Vision: Broad and unobstructed vision is essential to safety and adds immeasurably to the pleasure of motoring. This is one of the outstanding new features of the Cadillac "61." The new body has an extremely high windshield which, in addition to its steep 39 degree slope, permits an unusual amount of upward vision. The vee design, which places the pillars farther rearward than is possible with flat windshields, provides in itself more ample side vision for the driver.

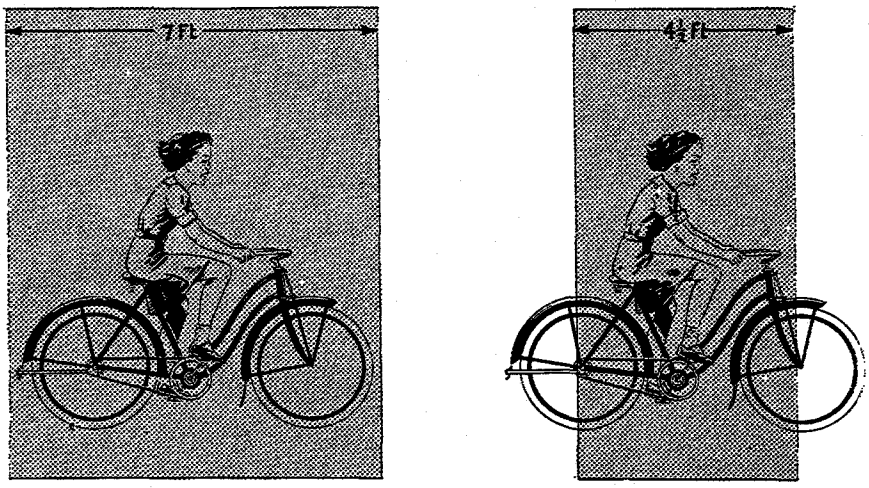

At a distance of 75 feet the conventional windshield pillar obstructs approximately 7½ feet of vision, the LaSalle and "61" pillar only about 4½ feet.

A new windshield pillar construction reduces the pillar size by a substantial amount, yet retains equal structural strength.

Windows, too, are higher and wider than in ordinary cars. *The total area increase is more than 25% for the windshield and all side windows.* The rear window is large and undivided, improving rearward vision.

Interior Luxury: Four beautiful new upholstery options are available for "61" closed body types. There are brown or gray novelty bedford cloths, brown plain broadcloth and tan pattern cloth with an orange stripe.

Good taste is evident in the simple combination of plain and pleated trimming styles. Cushions are plain. Seat backs have narrow pleats extending up about two-thirds the height of the back cushion where the panel is edged with the horizontal piping. The *center rear seat arm rest,* however, is plain but the piping is carried across it.

New garnish mouldings have integral panels. The mouldings are medium brown while the panels are finished in dark ribbon walnut.

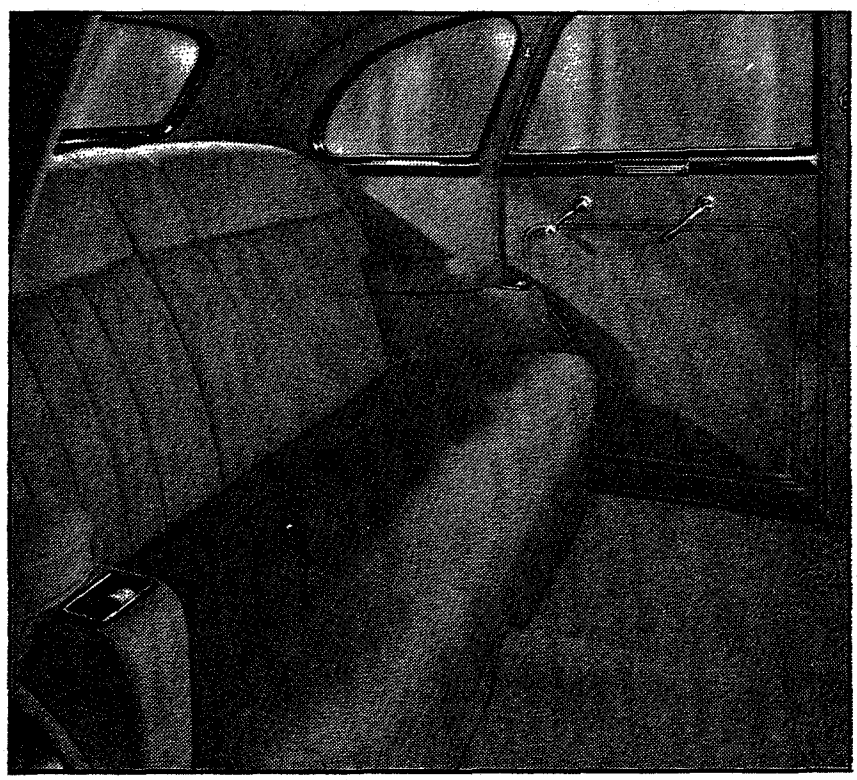

Luxurious "61" Rear Compartment

All interior hardware is of new design placed close to the door panels for safety and to leave more room in the body interior. Light colored plastic and bright chrome are combined in a most pleasing design.

All closed car ventipanes are equipped with inside locks for anti-theft protection. **These consist of inconspicuous sliding bolts which prevent forcing the ventipanel open from the outside. The control for the new**

sliding rear quarter window is devised so that the window is automatically locked in any position. Inside door locks are operated by buttons in the garnish mouldings.

Rear compartment side arm rests are fitted with recessed ash receivers. Chrome hooks are provided on both rear quarter pillars upon which to hang clothing when traveling. The safety front seat back has lace covered robe cord and recessed foot rest below.

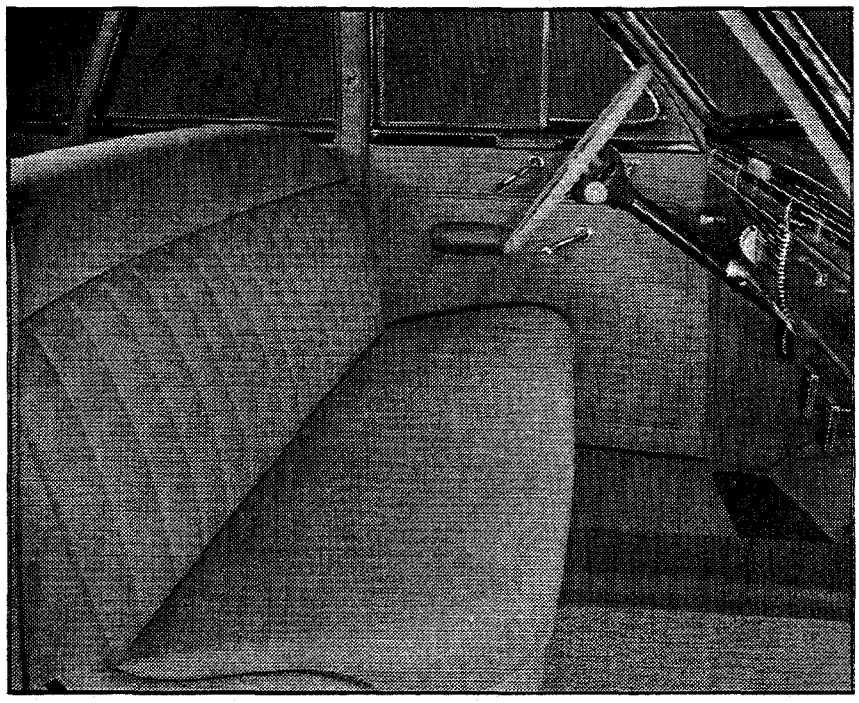

Clear, Roomy "61" Front Compartment

The new "61" front compartment presents an extraordinarily clean appearance. The new clear vision Safety Instrument Panel has been designed as an ensemble into which all instruments and controls have been blended. The effect is one of unusual smooth contours. Dark brown ribbon walnut finish is used to harmonize with the interior color scheme. The Syncromatic Gearshift and handbrake lever at the extreme left under the instrument panel leave an entirely unobstructed floor.

Cadillac engineers have devoted much attention to the *convenient location of driving controls.* The Syncromatic Shift lever has been repositioned and the shifting throw between gears has been shortened. The new handbrake lever is now closer to the driver. The cowl ventilator handle is now at the right of the steering column where it may be easily reached. The speedometer and clock reset knobs are in convenient positions. The front seat may be adjusted by releasing the locking lever placed in front of the seat below the driver.

Another improvement in driving comfort is an increase of 2½ inches in width for each of the cloth-trimmed leather bound sunshades.

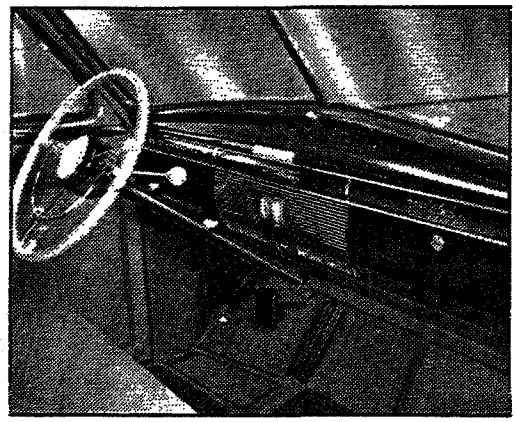

Cadillac "61" Instrument Panel and Standard Flexible Wheel

A new, distinctively smart flexible steering wheel is standard equipment on the "61" as on all other new Cadillac models. It has a light colored plastic rim and horn button to match the instrument panel controls. The horn button design consists of concentric circles with the Cadillac crest at the center. Either button or ring require but easy pressure to blow the horn. Steering wheel spokes are widely spaced on the upper half of the wheel and since the horn ring is designed as a partial circle of chrome over the lower half of the wheel, the driver now has a clear, unobstructed view of all instruments.

A new tubular steel front seat back frame is concealed beneath the trim. This much stronger frame assists in securing a neat trim around the top of the cushioned front seat back. It also permits the use of deeper springs which add to comfort.

Another improvement in front seat construction is the addition of a space below the seat and between it and the floor. Warm air from the front compartment heater can now pass under the seat, raising the rear compartment floor temperature. This opening also increases ventilation in summer, cooling the front seat and the rear compartment.

The tops of the front door arm rests are leather covered to maintain clean appearance and durability at these points.

The new front floor carpet is the most durable ever used in this model. The carpet consists of a rubber base with carpet inserts. The rubber base forms rubber pads at points subject to extreme wear such as below the pedals.

Additional Features of the Cadillac "61"

The Sunshine Turret Top is available at extra charge on the Touring Sedan.

Both the "61" Coupe and Convertible Coupe now have two folding opera seats behind the front seat. This affords greater rear deck storage capacity. An especial feature of these two body types is a hinge covered compartment in the floor of the rear deck useful for storing tools and other articles.

The Convertible Sedan now has a large trunk similar to the closed sedan.

The Convertible types have six leather upholstery options in addition to brown or gray ribbed cloth. The trimming style is plain. Clever new sunshades serve as draft deflectors in addition to their usual purpose.

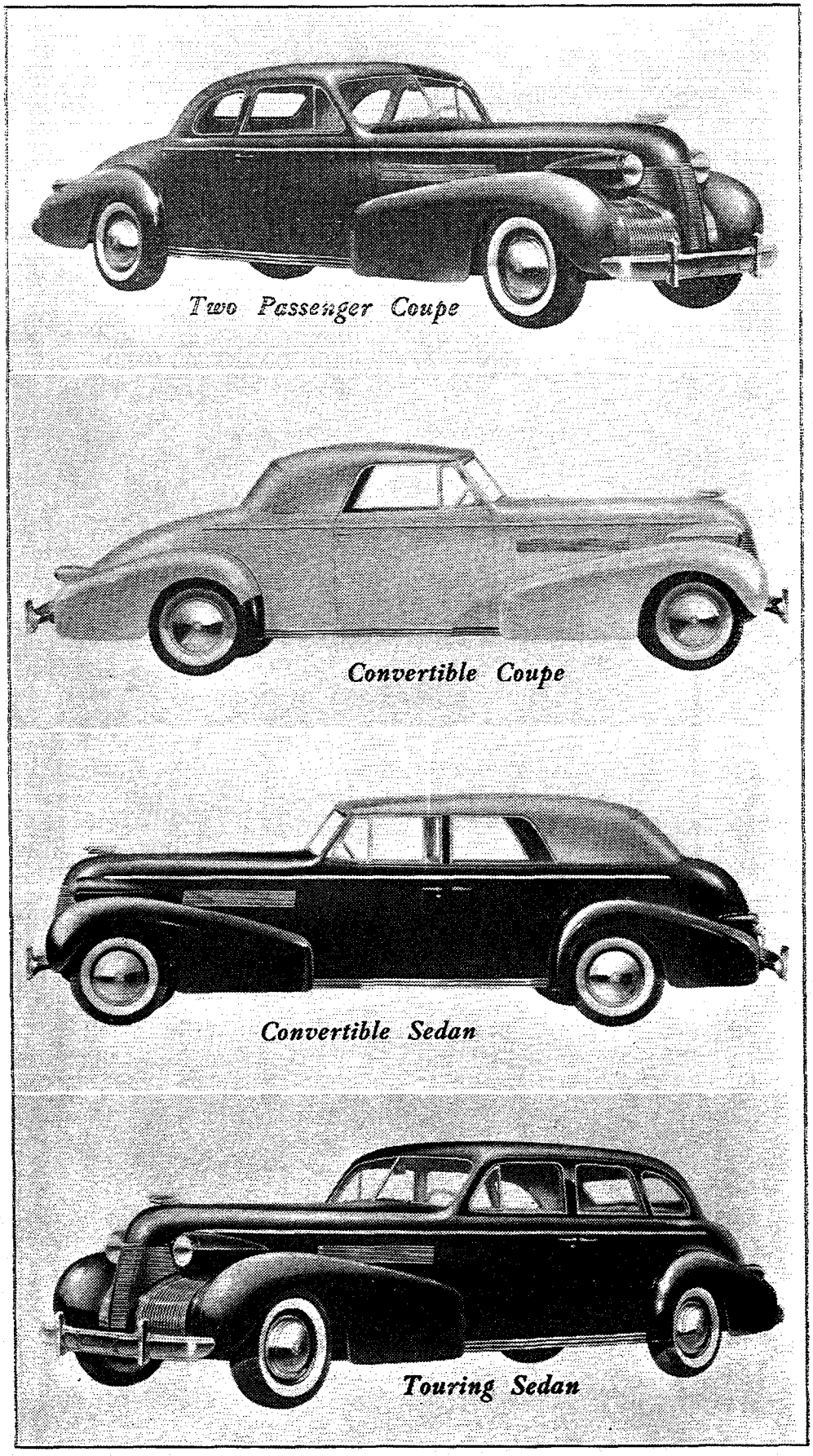
Two Passenger Coupe
Convertible Coupe
Convertible Sedan
Touring Sedan

CADILLAC "61" INTERIOR DIMENSIONS

	2-Pass. Coupe	Conv. Coupe	Conv. Sedan	5-Pass. Sedan
Front Seat Width (Hips)	54¾"	54¾"	54¾"	54¾"
Rear Seat Width (Hips)			47"	47"
Front Seat Width (Shoulders)	55"	55"	55"	55"
Rear Seat Width (Shoulders)			48¾"	53½"
Front Seat, Cushion to Floor	15½"*	15½"*	15½"*	15½"*
Rear Seat, Cushion to Floor			14½"	15½"
Front Seat Depth	18"	18"	18"	18"
Rear Seat Depth			20"	19¼"
Dash to Front of Front Seat	26¾"*	26¾"*	26¾"*	26¾"*
Front Seat Cushion to Clutch Pedal	18½"*	18½"*	18½"*	18½"*
Front Seat Back to Front Rear Cushion			13"*	14¾"*
Legroom—Rear Seat Back to Foot Rest			41½"	42¼"
Steering Wheel to Front Seat Cushion	6"*	6"*	6"*	6"*
Steering Wheel to Front Seat Back	13¾"*	13¾"*	13¾"*	13¾"*
Headroom—Cushion to Roof—Front	37¼"*	37¼"*	37¼"*	37¼"*
Headroom—Cushion to Roof—Rear			37¼"	35½"
Headroom—Floor to Roof	49 7/16"	49 7/16"	50 1/16"	49¼"
Inside Maximum Body Width	56"	56"	55½"	56"
Front Door Width	44 5/8"	44½"	34"	35"
Rear Door Width			29"	29¼"
Width Over Front Fenders	75½"	75½"	75½"	75½"
Width Over Rear Fenders	71¼"	71¼"	71¼"	71¼"
Overall Height, Loaded	66¼"	66"	66"	66¼"
Overall Length, Bumper to Bumper	207¼"	207¼"	207¼"	207¼"
Trunk and Deck Capacities (cu. ft.)	22.6	18.1	16.6	21.4

*Dimensions taken with front seat in full rearward position. Seat may be adjusted 4" forward.

CADILLAC SIXTY SPECIAL

Again the Newest Car in the World

The Sixty Special was heralded last year as the World's First Truly Practical Motor Car because it combined for the first time smarter, lower lines with greater breadth of vision and greater interior roominess than had ever been obtained in a motor car before.

Public acceptance of the Sixty Special has been far and beyond Cadillac's fondest hopes. The Special established a design trend to be introduced into the lower price ranges by the Cadillac "61" and LaSalle in 1939.

Now a custom creation by Fleetwood, the Sixty Special retains all its distinctive features, making it again the Newest Car in the World. The new Special is still as uniquely dissimilar from all other cars as it was before. Its "practicalness" and its low appearance are just as exclusive in 1939 as they were in 1938.

The Special is powered with the 135 horsepower Cadillac V-8 engine. Its performance is far superior to all other eights of its class. In quietness and smoothness the Special is excelled only by the incomparable Cadillac Sixteen.

The soft riding comfort and unexcelled roadability of the Special, another of its superior combinations, have been a practical guide in the final development of Controlled-Action Ride for LaSalle and Cadillac "61."

Without question, the smartest motor car among all 1939 automobiles is the new Cadillac Sixty Special.

SIXTY SPECIAL APPEARANCE

Front View: The Special's front appearance is typically Cadillac for 1939, identifying it immediately as a member of the greatest fine car family. Yet the Sixty Special's extremely low lines distinguish its front appearance from all other Cadillacs.

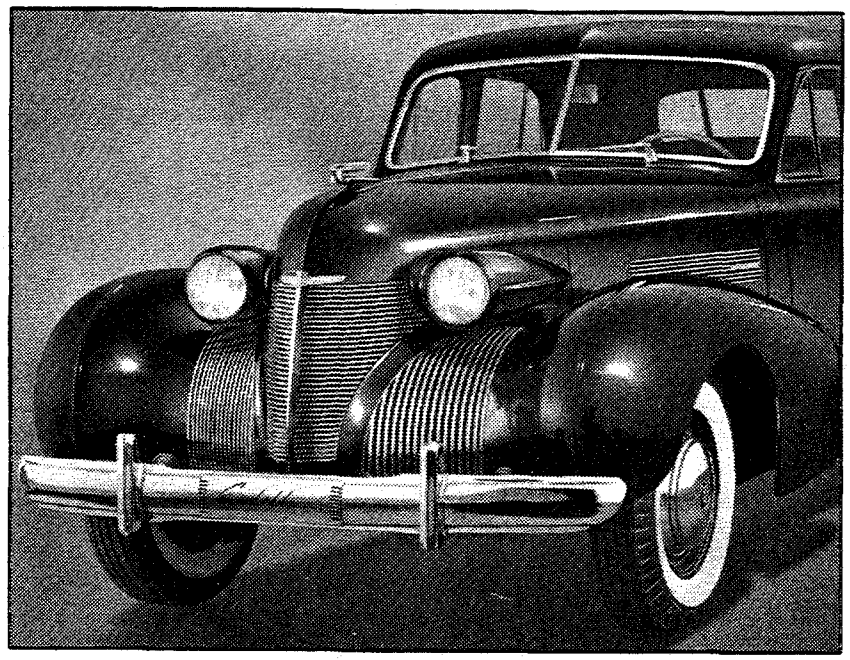

Sixty Special Frontal Appearance

The new radiator and fender cooling grilles have a wide vee contour which blends with utmost grace into the smooth, flowing lines of the body. Long, streamlined headlamps, apparently integral with the hood side panels, smooth front opening hood windsplit to match the windsplits of the massive fenders and new bumpers curved into the fender contour all fit into one harmonious design and provide sensational smartness.

Side View: Here one can best appreciate the dynamic quality of the low lines which flow from radiator grille to streamlined tail. Again, the new front ensemble adds gracefulness. Following the precedent of last year, the belt line without moulding forms a principal highlight in the overall side view.

There are no running boards. The lower edge of the body is decorated by stainless steel mouldings. The lower portion of the fender is protected against splash and gravel by a heavy rubber cover. The *appearance of these guards* has been *improved* by a special process which gives *a smooth black finish.*

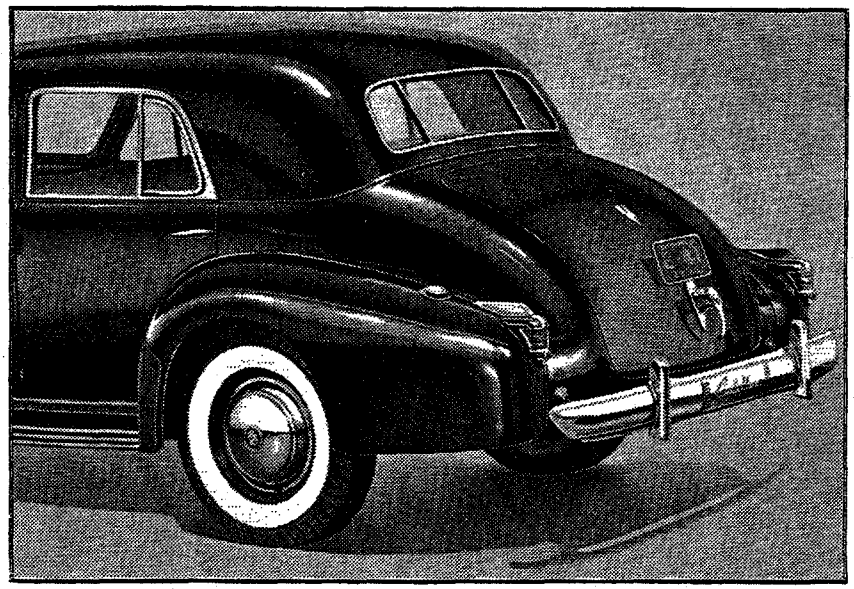

Sixty Special Rear View

Rear View: The ground-hugging appearance of the Sixty Special is most noticeable from the rear. The graceful streamlined tail suggests racing car speed and conceals a luggage compartment of ample capacity. The interior of the trunk is exceedingly neat in appearance. The entire interior including the floor is covered by a tailored lining of light brown serge.

The three-pane rear window is decorated by chrome mouldings surrounding the window and upon each of the two very narrow divisions.

Tail lamps are similar to the previous design and are mounted on the fenders. The license plate is in the center of the trunk lid and is illuminated by a lamp formed as a part of the trunk lid handle assembly. This adds to the unusually neat rear appearance.

SIXTY SPECIAL INTERIOR

The unexcelled body width and extraordinarily wide vision of the Special are continued. High, wide doors and low floors provide ease of entrance. The step from the ground to the interior is only 13½ inches.

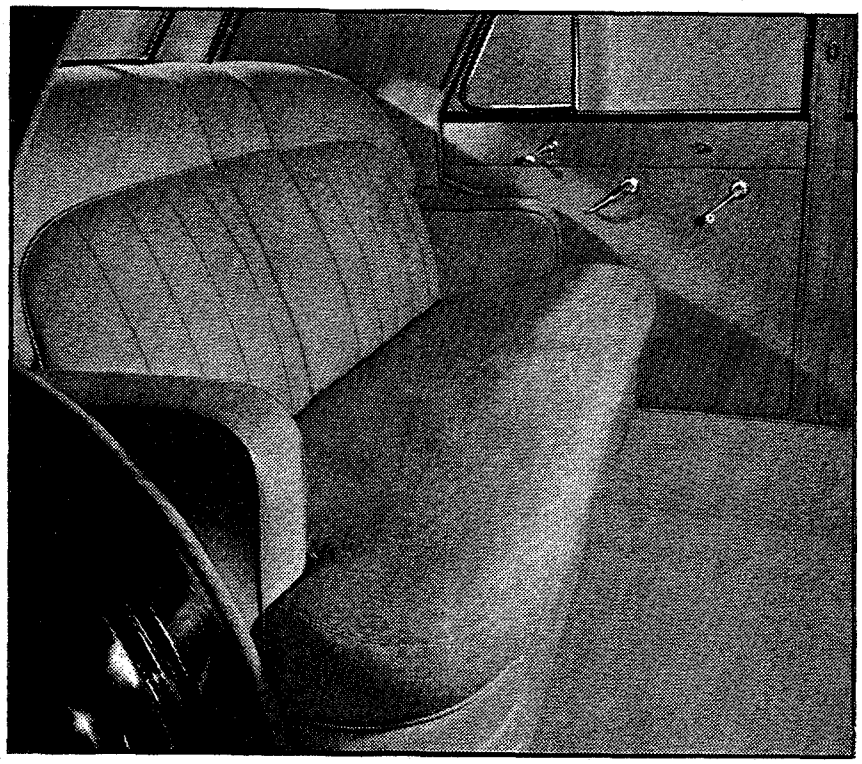

Roomy Rear Compartment

Luxurious Fitments: The interior has been refreshed by *new upholsteries, new trimming styles, new hardware and the new instrument panel.* While the Special employs the same wide choice of rich fabrics as the "61" the trimming style is exclusive to this model. Seat cushions are plain. Seat backs have a panel of narrow pleats set off by leather piping. The rear seat center arm rest is plain, however, but the line of leather piping is carried across it. The robe cord is leather covered. Door panels are decorated by wide leather panels across their tops. Also the front door arm rests are leather covered at

the top. Leather inserts cover the cushioned front seat back and extend down the sides of the seat.

New garnish mouldings have a walnut finish. The mouldings are curved to grip the leather panels below, giving a neat appearance and holding the leather securely in position.

There are no rear quarter windows since the body design makes them unnecessary. Each door window is fitted with ventipanes which have new locks for protection against theft. Windows slide in narrow chrome frames as in convertible styles.

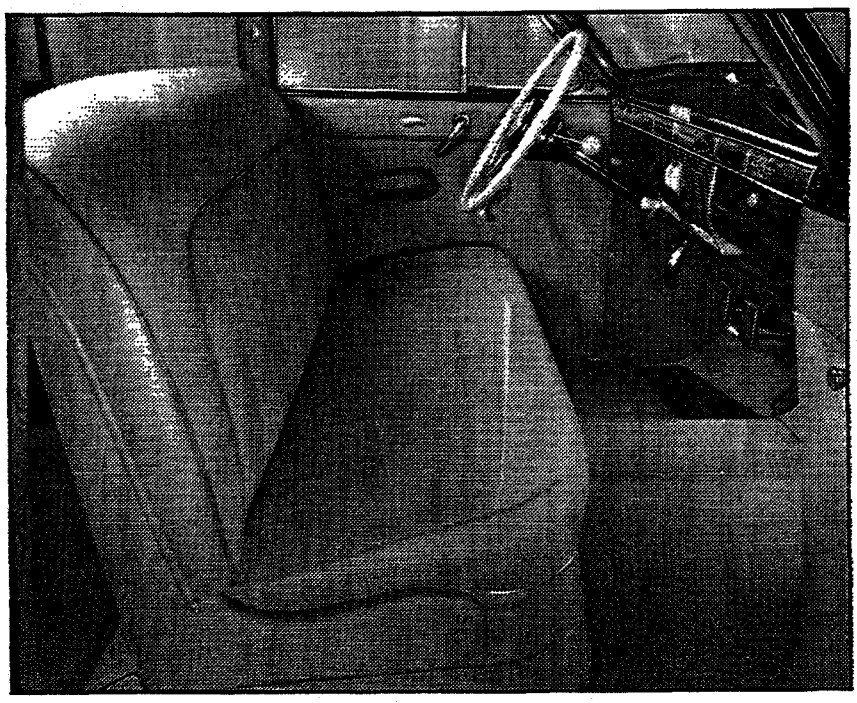

Neat, Clear Front Compartment

New hardware is similar in safety design to the Cadillac "61." Inside door locks are of the horizontal sliding type. For convenience, the rear door locks are now forward where they may be easily reached from either the front or rear seat.

An ash receiver is mounted in the center of the front seat back. It has a narrow chrome frame and walnut finish door with plastic handle.

The front compartment of the Special is noteworthy for its clean, uncluttered appearance. The new instrument panel, improved Syncromatic Gearshift, relocated handbrake lever and cowl ventilator control are all similar to the "61" and contribute to neat appearance and convenient operation.

The front seat adjusting mechanism, instead of being on the front of the seat as in the "61" is on the left hand side.

The rear view mirror is now more conveniently and neatly mounted upon the windshield divider and may be rotated to raise or lower to suit the driver's height.

The *Sunshine Turret Top* serves as an effective substitute for those who request convertible styles in the Special line. This is optional at extra cost.

FLEETWOOD COACHWORK

The custom character of the Sixty Special body could only have come from Fleetwood. This body is made especially and exclusively to Cadillac order. Among 1939 cars several noticeable attempts have been made to copy the Special's distinctive styling and features of design. It is equally obvious that there has been no duplication. The Cadillac Sixty Special is still the *Newest Car in the World.*

To obtain such unexcelled width and such extensive vision, innumerable novel design features had to be developed by Fleetwood craftsmen. For example, the wide doors are hinged at their fronts and the window glasses slide in narrow chrome frames. This unique and expensive two-piece door construction makes possible the unusually small pillars and unobstructed vision. Such uniqueness and costliness in building the Sixty Special coachwork makes but one body style possible—a five-passenger touring sedan.

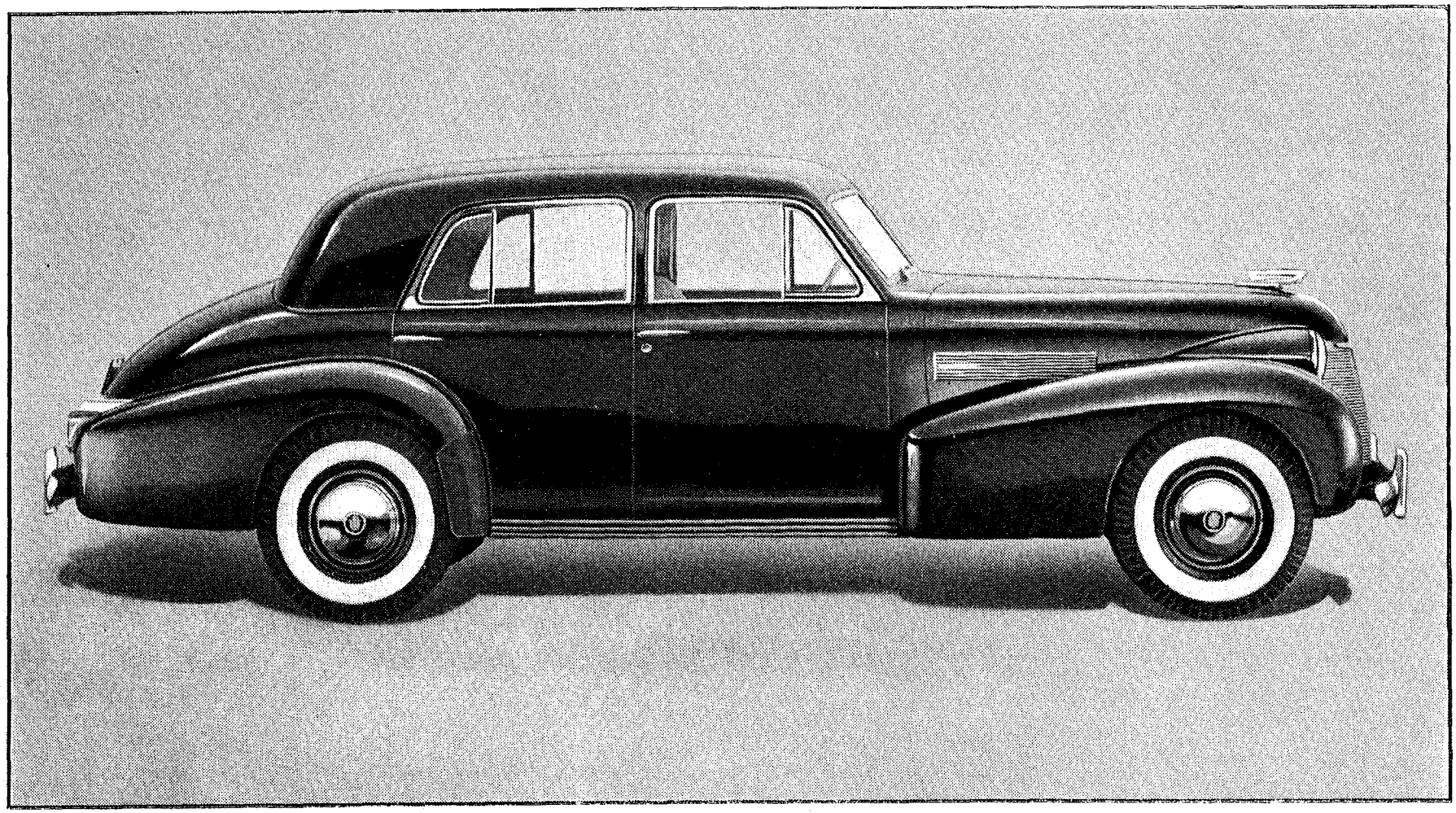

Cadillac Sixty Special Touring Sedan

CADILLAC SIXTY SPECIAL

Five-Passenger Touring Sedan

Front Seat Width (*Hips*)	59″
Rear Seat Width (*Hips*)	51″
Front Seat Width (*Shoulders*)	58″
Rear Seat Width (*Shoulders*)	57″
Front Seat, Cushion to Floor	14½″*
Rear Seat, Cushion to Floor	16″
Front Seat Depth	18″
Rear Seat Depth	20″
Dash to Front Seat Back	44¾″
Front Seat Cushion to Clutch Pedal	19″*
Front Seat Back to Rear Seat Back	34¼″
Rear Seat Back to Foot Rest	45¾″
Steering Wheel to Front Seat Cushion	6″
Steering Wheel to Front Seat Back	14″*
Headroom—Cushion to Roof—Front	36¾″
Headroom—Cushion to Roof—Rear	36½″
Headroom—Floor to Roof	47½″
Front Door Width	39¼″
Rear Door Width	36″
Width Over Front Fenders	77¾″
Width Over Rear Fenders	75⅜″
Overall Height, Loaded	65″
Overall Length, Bumper to Bumper	214¼″
Trunk Capacity (cu. ft.)	20

**Dimensions taken with front seat in full rearward position—Seat may be adjusted 4″ forward. Rear of front seat rises ¾″ with 4″ forward movement.*

CADILLAC FLEETWOOD

Most Magnificent Among Fine Cars

The Fleetwood Body Corporation is one of the oldest and most experienced coachwork builders in the industry. Completely removed from all mass production influences, Fleetwood's skilled personnel have devoted themselves consistently to their craft for nearly thirty years. The extreme capability of these craftsmen long



The Home of Fleetwood

won for Fleetwood a position of world renown in coach building analogous to the recognition of Cadillac as Standard of the World in motor car engineering design. Fleetwood has been privileged to initiate and create personalized coachwork designs for the world's most notable personages to their most exacting requirements. Fleetwood history prior to 1927 was one of intimate association with such motor car builders as Rolls Royce, Hispano-Suiza, Isotta-Fraschini and with all American fine car builders as well. Among the coachwork builders, Fleetwood is one of the most outstanding of them all.

Cadillac is now in its eleventh year of exclusive asso-

ciation with Fleetwood, thus complementing its superlative engines and chassis and providing Cadillac-Fleetwood owners with the finest and most luxurious coachcraft obtainable. Cadillac is the only fine car today offering custom coachwork for the lowest investment!

The outstanding features of individuality and distinction for which Fleetwood craftsmanship has long been famed reach new peaks of reality in the Cadillac Fleetwoods for 1939. These fine cars have more generous roominess and more luxurious appointments than are provided in any other fine car. The most fastidious of fine car customers will be unusually pleased, for the new Cadillac Fleetwood reflects so much visible luxury and such scrupulous attention to minute detail over all other fine cars that those who desire highest quality will really want Fleetwood this year.

Steel Coachwork Construction

The Turret Top is employed on all enclosed Fleetwood types, including the Formal Sedans and Town Car. Leather is applied over the steel in these models. The most important advancement in coachwork construction is an all-steel structural body by Fleetwood. The safety of steel is combined with the luxuriousness of interiors in every Cadillac Fleetwood. In order to provide individuality in style and design among the various custom types, wood is used in body sills and in rear door and trunk lid frames. Every structural member contributing to strength and rigidity is of steel.

Fleetwood coachwork includes most thorough weather and sound insulation. A new feature in heat insulation this year is the *addition of a thick padding of mineral wool on the inner sides of the cowl* behind the finished side walls in the front compartment. This feature further minim-

izes any possibility of engine heat reaching front seat passengers.

The combination of all-steel construction, Turret Top and thorough insulation and sound proofing provide the Cadillac Fleetwoods with a degree of safety and comfort exclusive among fine cars.

DIGNIFIED STYLING

The luxuriousness of Fleetwood coachcraft is apparent in their exterior styling. One is at once impressed with the modern dignity of the new Fleetwoods and their generous proportions about which there is no air of cumbersomeness so typical of other large cars. Great overall length, long, wide, low coachcraft and, more important, extremely great glass areas in windows and

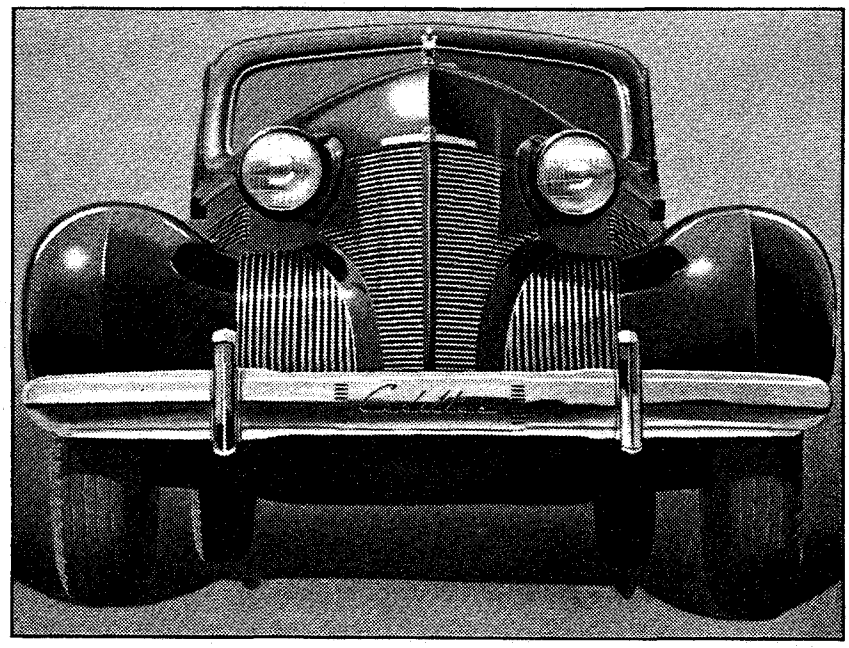

Fleetwood Frontal Appearance

windshield are all combined to give the new Fleetwood an exterior appearance of a truly fine car. The new Cadillac Fleetwoods are the most distinctive in appearance among all fine cars. They resemble no other make of fine car.

The new Fleetwoods are similar in frontal design to the other Cadillacs in order to provide a close affiliation of identity among all models of the Cadillac line. Yet the greater size of the Fleetwood adds an impression of dignity which places this series in an entirely different category.

The unusual tapered Fleetwood belt moulding extends from the radiator grille to the trunk, accentuating the appearance of great length.

Running boards are rubber covered with die cast streamlined ends separated from the fenders for drainage. Stainless steel trim decorates the outer edge.

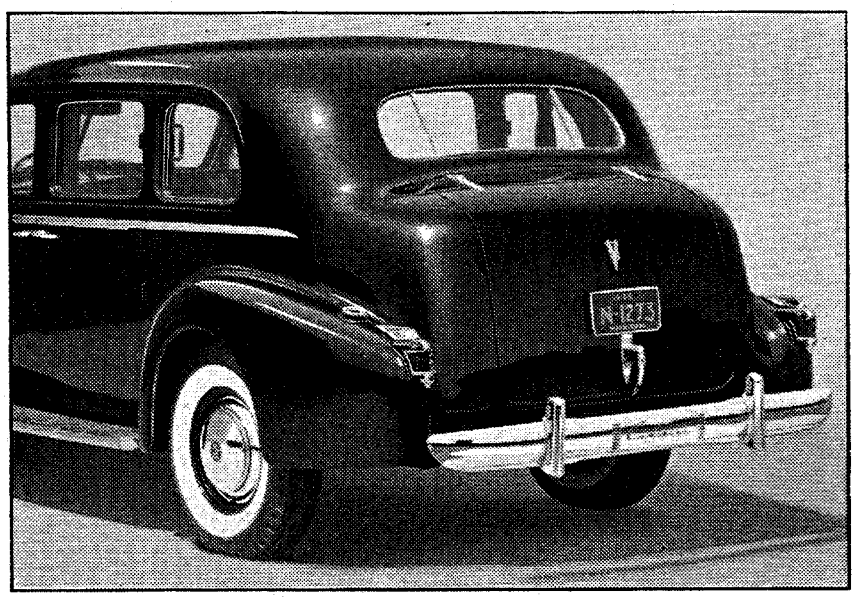

Fleetwood Rear View

Rear appearance of the Fleetwoods has been greatly improved. Bright metal trim is used around the rear window and upon its two divisions. A combination license plate support, light and trunk lid handle make for neatness in appearance. New bumpers, bearing the Cadillac name in script, curve inward at their ends in harmony with the fender contour, thus serving a final touch in incorporating all parts of the rear of the car into one complete ensemble of smooth, flowing lines.

Trunks and deck storage spaces of the various Fleetwood types have been greatly improved in appearance. They are *trimmed* in a *luxurious* new *tapestry carpeting*. Also for all sedan types the forward wall of the trunk now has an entirely smooth surface.

FLEETWOOD INTERIORS

The 1939 Cadillac Fleetwoods are by far the roomiest and most comfortable of all fine cars. Their unparalleled luxury has been still further increased by a new trimming style, new rare wood paneling and new hardware.

Comfort and Roominess: Within the new Fleetwoods an atmosphere of spacious roominess prevails. The three important comfort dimensions, 58¾ inches shoulder room, 64¾ inches legroom (7-Pass.) and 35½ inches headroom are ample for even the very tall person.

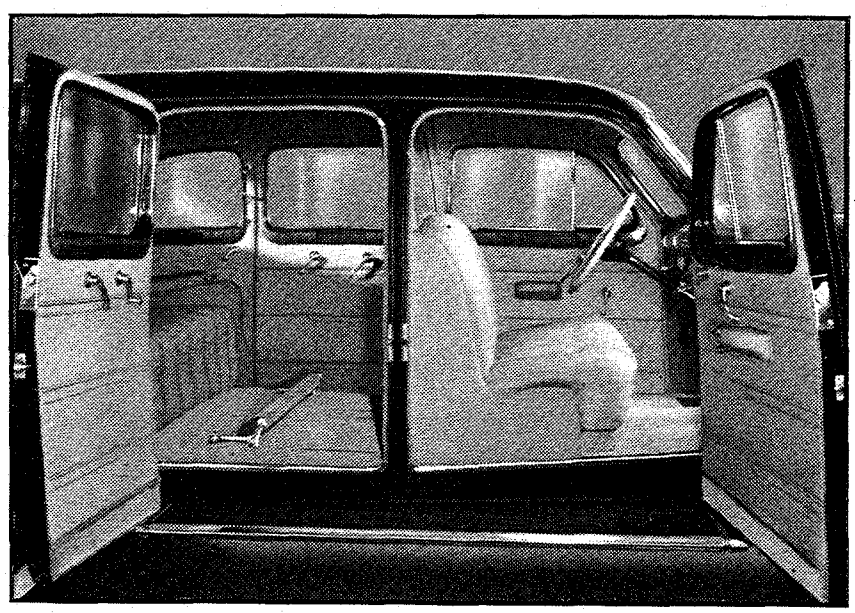

Entrance into the new Fleetwoods is facilitated by extraordinarily high, wide doors and lower floors than in other fine cars.

Seat cushions and seat backs are fitted with Marshall springs padded with virgin wool. Only by sinking into the soft depths of these resilient cushions can the full measure of comfort of their construction be realized.

Auxiliary seat design and construction for seven-passenger types is a most important and exclusive Cadillac Fleetwood feature. Through careful design the thickness of the front seat back is less than in ordinary

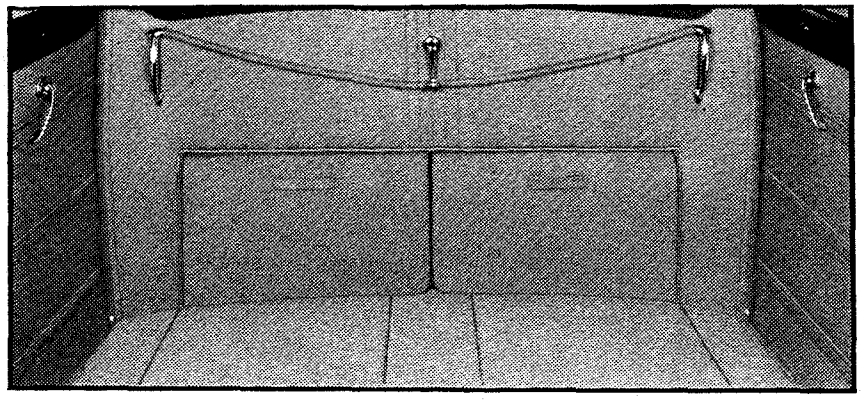

When not in use auxiliary seats have a neat paneled appearance.

fine cars, giving greater Fleetwood entrance width at the rear door. Thus, there is more room to enter the auxiliary seats and there is more legroom for these passengers. Also auxiliary seats are wider than in other cars and since they are flush at the center, three passenger capacity is afforded. The unique folding back construction provides high, comfortable seat backs. The auxiliary seats fold down flush into a

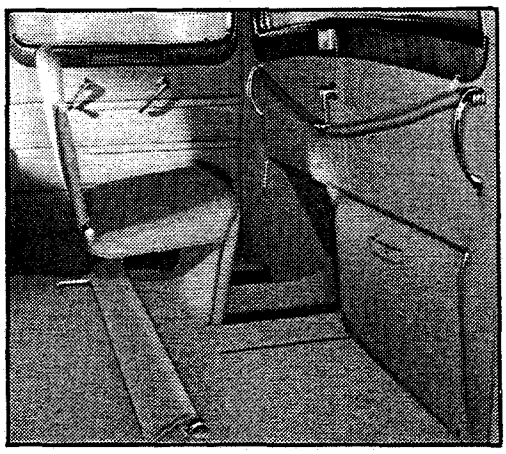

When raised, auxiliary seats provide unusual comfort and roominess.

depression in the front seat back, giving a neat paneled appearance. They are raised by a gentle pull on their strap handles. Annoying and unsightly zipper flaps or latched covers are avoided.

Driving safety and enjoyment is promoted by unusually high, wide glass areas in windshield and door windows. Outward vision in the Fleetwoods is greater than in any other fine car.

Appointments: The softness and high lustre of upholstery fabrics which lend such a rich atmosphere to the Fleetwood interiors are the result of special textiles manufactured to Fleetwood specifications. Only 100% imported Australian virgin wool is used because its longer fibre produces the finest and softest cloths. Fabrication requires an extended period of time under controlled temperatures and humid air. The finished cloth is then allowed to set and is actually cured, resulting in the most lustrous fabrics of highest quality.

The Fleetwood fabrics are in seven exclusive Weise patterns and cannot be duplicated. A luxurious new *trimming style* consists of wide pleats with a button in each pleat. The headlining is outlined by leather binding. Door panels are attractively decorated by welts and piping.

One luxurious feature of the new Fleetwood interiors is the *garnish panel of natural straight grained walnut* inlaid in a pleasing new design. Complementing the design of these rare wood panels, doors are attractively decorated with three horizontal stripes. The new instrument panel is finished in dark burled walnut and the hardware decorated in dark brown plastic to complete the color harmony. The brown color scheme of the new Fleetwood interiors lends an unusual impression of warmth.

The floors are entirely level and fitted with *rich plush carpeting vulcanized to thick pads of sponge rubber.* This is an exclusive Fleetwood feature.

For specific items of equipment and appointments for each Fleetwood type, consult the pages following each dimensional drawing.

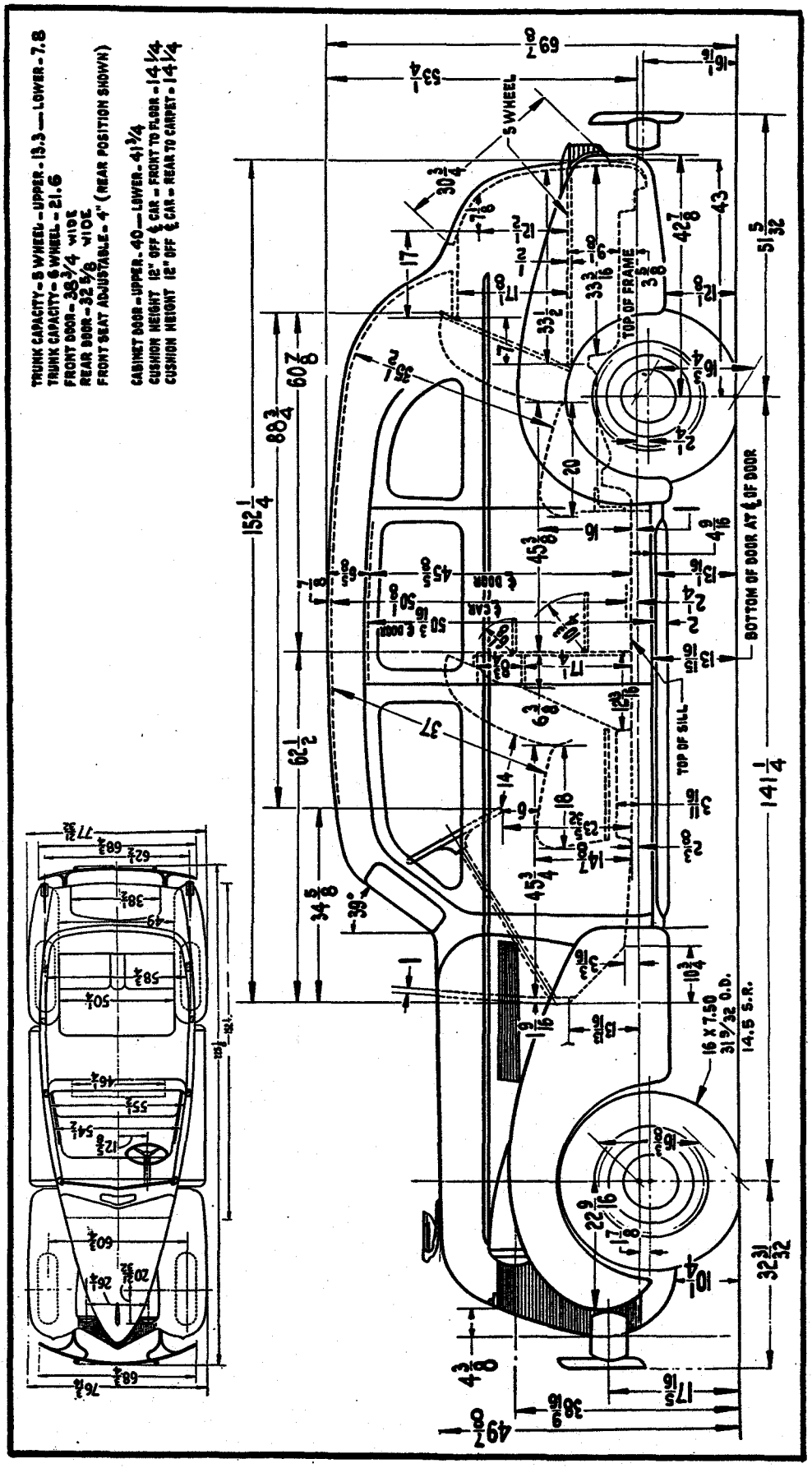
TRUNK CAPACITY - 5 WHEEL - UPPER - 13.3 — LOWER - 7.8
TRUNK CAPACITY - 6 WHEEL - 21.6
FRONT DOOR - 38¾ WIDE
REAR DOOR - 32⅝ WIDE
FRONT SEAT ADJUSTABLE - 4" (REAR POSITION SHOWN)
CABINET DOOR - UPPER - 40 — LOWER - 41¾
CUSHION HEIGHT 12" OFF ℄ CAR - FRONT TO FLOOR - 14¼
CUSHION HEIGHT 12" OFF ℄ CAR - REAR TO CARPET - 14¼
5 WHEEL
TOP OF FRAME
TOP OF SILL
BOTTOM OF DOOR AT ℄ OF DOOR
16 X 7.50
31.9/32 O.D.
14.5 S.R.

CADILLAC FLEETWOOD

5-TOURING SEDAN

Style No. 7519—(Illustrated on Page 80)

Equipment and Appointments

Rear Quarters: Metal with quarter windows.

Front Seat: Entire front seat cushion and back rest adjustable 4". Seat cushion has ¾" rise. Seat frame integral with center body pillars.

Rear Seat: Seat cushion and seat back stationary.

Lighting: Dome light operated by rear doors and left rear pillar switch. Also corner lights, switch on right rear pillar.

Windows: Front door windows are equipped with individually controlled ventilator feature. Rear quarter window moves rearwardly 3½". All ventipanes have inside locks. All windows Security Plate Glass.

Interior Panels: Straight grain walnut inlays.

Trim: Seven Weise cloths; tan, brown or gray; exclusive patterns; pleated mode.

Smoking Equipment: Two ash receivers and two pass-around lighters located at front of rear compartment side arm rests; pass type lighter and ash receiver in instrument control panel recess.

Equipment: Two triangular shaped spring type foot hassocks, plush carpet covered to match floor carpet; silk curtain for rear window; two assist straps located on right and left hand rear pillars; two longer interior sun visors, fully adjustable; folding center arm rest in rear seat back, side arm rests in rear compartment and on front doors; slash pocket on inside of each arm rest in rear compartment; two package compartments in back of front seat; cloth covered robe cord with integral assist grips.

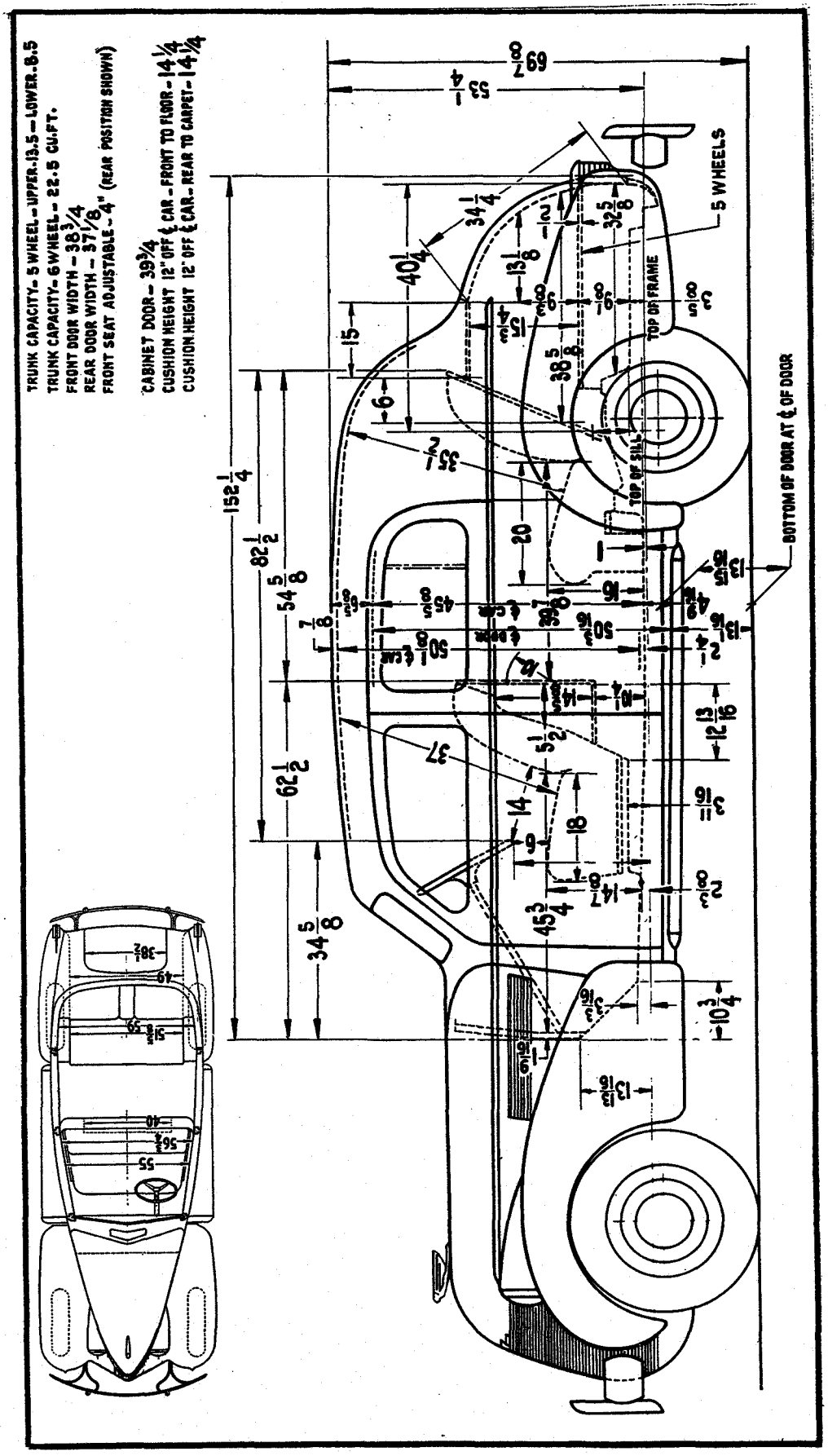
TRUNK CAPACITY- 5 WHEEL - UPPER-13.5 — LOWER-8.5
TRUNK CAPACITY- 6 WHEEL - 22.5 CU.FT.
FRONT DOOR WIDTH - 38 3/4
REAR DOOR WIDTH - 37 1/8
FRONT SEAT ADJUSTABLE - 4" (REAR POSITION SHOWN)
CABINET DOOR - 39 3/4
CUSHION HEIGHT 12" OFF ℄ CAR - FRONT TO FLOOR - 14 1/4
CUSHION HEIGHT 12" OFF ℄ CAR - REAR TO CARPET - 14 1/4
5 WHEELS
TOP OF FRAME
TOP OF SILL
BOTTOM OF DOOR AT ℄ OF DOOR

CADILLAC FLEETWOOD

5-PASSENGER TOWN SEDAN (Trunk)

Style No. 7539—(Illustrated on Page 82)

Equipment and Appointments

Rear Quarters: Full metal back.

Front Seat: Entire front seat cushion and back rest adjustable 4". Seat cushion has ¾" rise. Seat frame integral with center body pillars.

Rear Seat: Seat cushion and seat back stationary.

Lighting: Dome light operated by rear doors and left pillar switch; two rear corner lights operated by right pillar switch.

Windows: Front and rear doors are equipped with individually controlled ventilation feature. Inside locks on front ventipanes only. All windows Security Plate Glass.

Interior Panels: Straight grain walnut inlays.

Trim: Seven Weise cloths; tan, brown or gray; exclusive patterns; pleated mode.

Smoking Equipment: Ash receivers recessed in rear arm rests; two pass around lighters in front of rear ash receivers, pass type lighter and ash receiver in instrument control panel.

Equipment: Two triangular shaped spring type foot hassocks, plush carpet covered to match floor carpet; silk curtain for rear window; large package compartment on back of front seat; two larger interior sun visors, fully adjustable; folding rear center arm rest, arm rests on both front doors; assist handles at each end of robe cord; electric clock in center of front seat back.

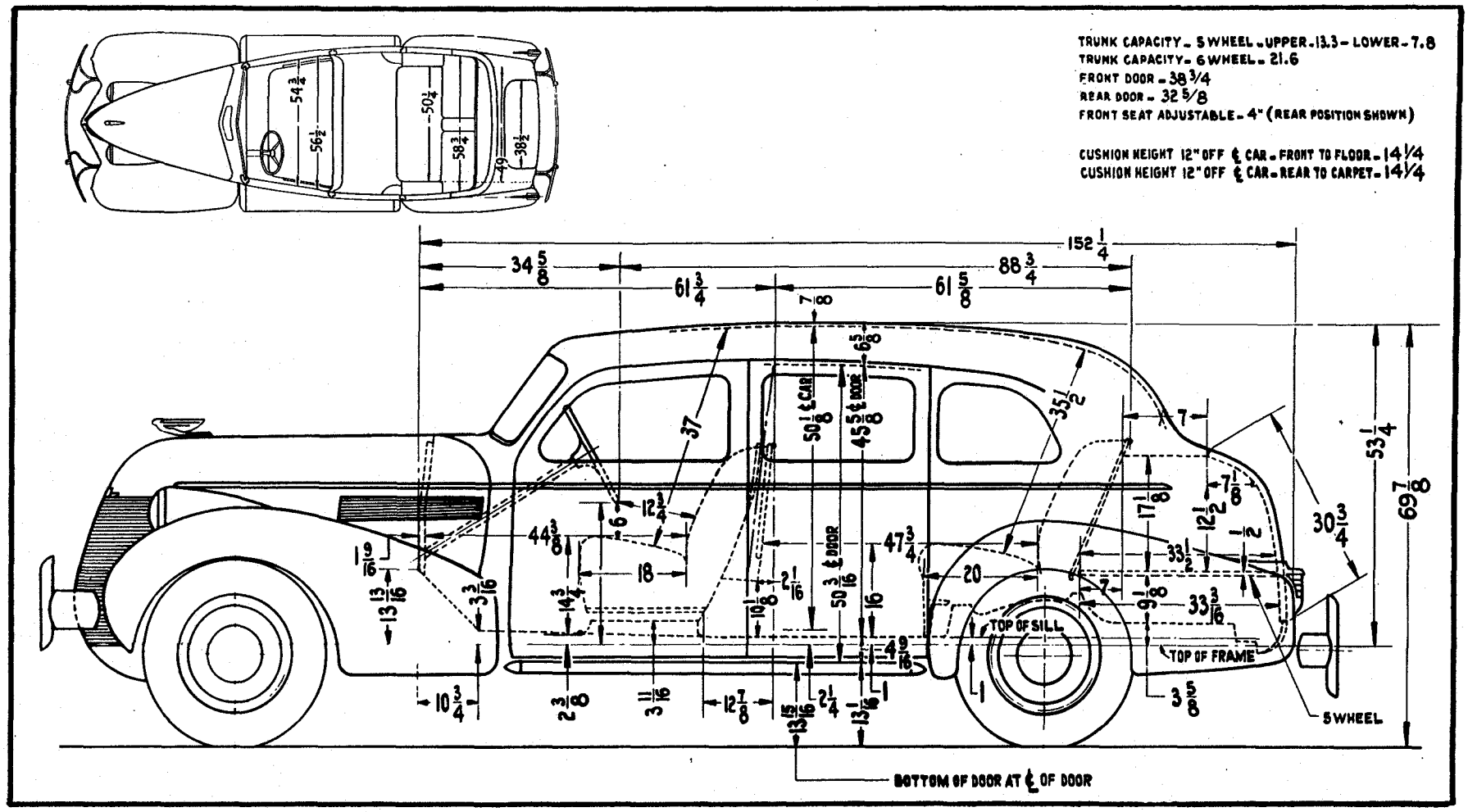
TRUNK CAPACITY - 5 WHEEL - UPPER - 13.3 - LOWER - 7.8
TRUNK CAPACITY - 6 WHEEL - 21.6
FRONT DOOR - 38 3/4
REAR DOOR - 32 5/8
FRONT SEAT ADJUSTABLE - 4" (REAR POSITION SHOWN)
CUSHION HEIGHT 12" OFF ℄ CAR - FRONT TO FLOOR - 14 1/4
CUSHION HEIGHT 12" OFF ℄ CAR - REAR TO CARPET - 14 1/4
152 1/4
34 5/8
88 3/4
61 3/4
61 5/8
53 1/4
69 7/8
30 3/4
TOP OF SILL
TOP OF FRAME
5 WHEEL
BOTTOM OF DOOR AT ℄ OF DOOR

CADILLAC FLEETWOOD

5-TOURING SEDAN with Division

Style No. 7519-F—(Illustrated on Page 84)

Equipment and Appointments

Rear Quarters: Metal with quarter windows.

Front Seat: Entire front seat cushion and back rest adjustable 4". Seat cushion has ¾" rise. Seat frame integral with center body pillars.

Rear Seat: Seat cushion and seat back stationary.

Lighting: Dome light operated by rear doors and left pillar switch. Also corner lights, switch on right pillar.

Windows: Front door windows are equipped with individually controlled ventilator feature. Rear quarter window moves rearwardly 3½". All ventipanes have inside locks. All windows Security Plate Glass.

Interior Panels: Straight grain walnut inlays.

Trim: Seven Weise cloths in exclusive patterns; brown, tan or gray; pleated mode.

Smoking Equipment: Two ash receivers and two pass-around lighters located at front of rear compartment side arm rests; pass type lighter and ash receiver in instrument control panel.

Division: Between front and rear compartments, no header board; modified side pillars; glass may be raised or lowered; operated by control handle on center of division.

Equipment: Two triangular shaped spring type foot hassocks, plush carpet covered to match floor carpet; assist straps on rear pillars; assist handles at both ends of robe cord; folding rear seat center arm rests; arm rests on each front door; slash pockets on inside each rear arm rest.

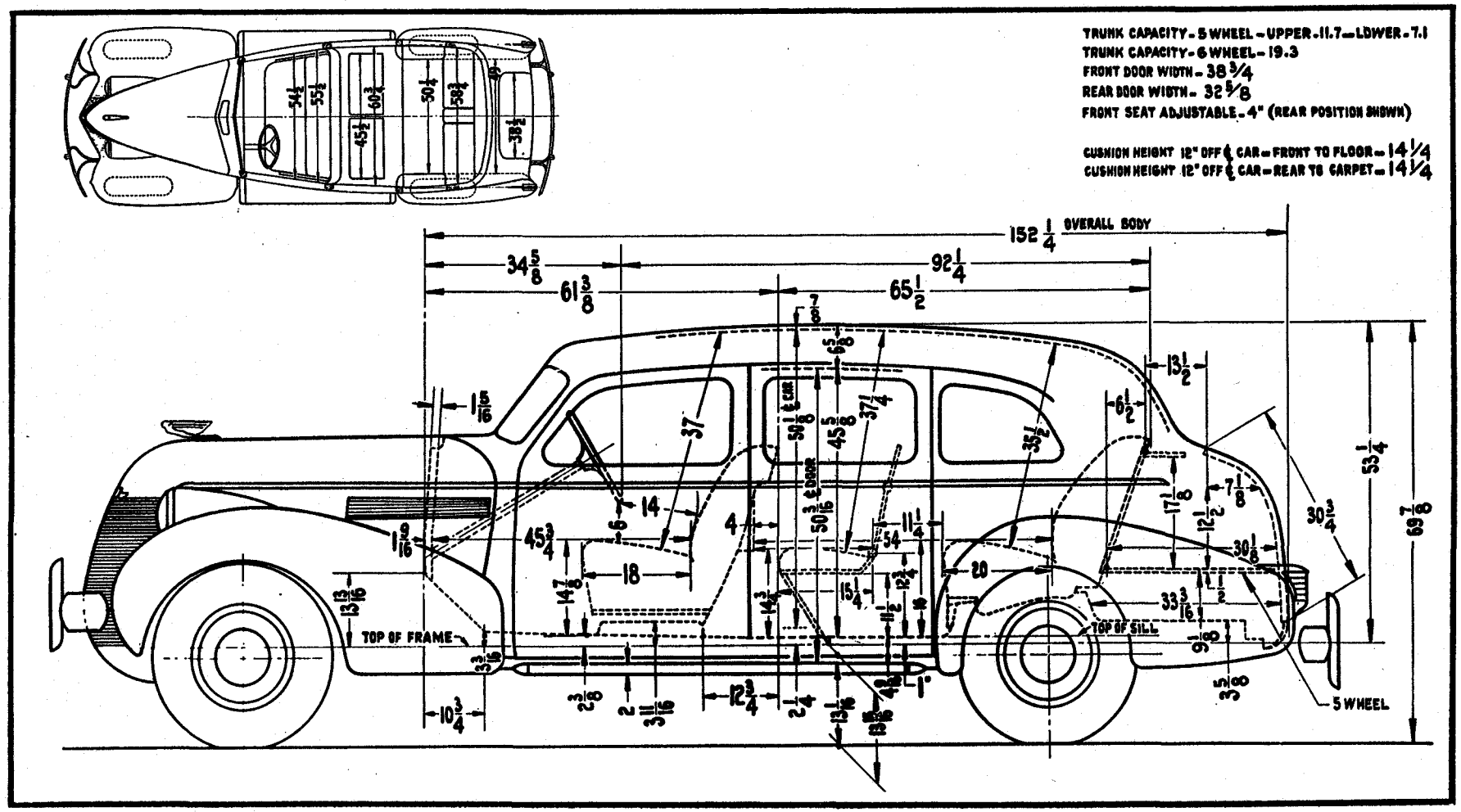
TRUNK CAPACITY - 5 WHEEL - UPPER - 11.7 — LOWER - 7.1
TRUNK CAPACITY - 6 WHEEL - 19.3
FRONT DOOR WIDTH - 38 3/4
REAR DOOR WIDTH - 32 5/8
FRONT SEAT ADJUSTABLE - 4" (REAR POSITION SHOWN)
CUSHION HEIGHT 12" OFF ℄ CAR - FRONT TO FLOOR - 14 1/4
CUSHION HEIGHT 12" OFF ℄ CAR - REAR TO CARPET - 14 1/4
152 1/4 OVERALL BODY
34 5/8
92 1/4
61 3/8
65 1/2
TOP OF FRAME
TOP OF SILL
5 WHEEL

CADILLAC FLEETWOOD

7-TOURING SEDAN

Style No. 7523—(Illustrated on Page 86)

Equipment and Appointments

Rear Quarters: Metal with quarter windows.

Front Seat: Entire front seat cushion and back rest adjustable 4". Seat cushion has ¾" rise. Seat frame integral with center body pillars.

Rear Seat: Seat cushion and seat back stationary.

Lighting: Dome light operated by rear doors and left pillar switch; two rear corner lights operated by right rear pillar switch.

Windows: Front doors are equipped with individually controlled ventilation feature; rear quarter windows move rearwardly 3½". All ventipanes have inside locks. All windows Security Plate Glass.

Interior Panels: Straight grain walnut inlays.

Trim: Seven Weise cloths in exclusive patterns; tan, brown or gray; pleated mode.

Smoking Equipment: Two ash receivers and two pass-around lighters located at front of rear compartment side arm rests; pass type lighter and ash receiver in instrument control panel.

Extra Seats: Two facing forward, luxuriously upholstered with Marshall springs; double throw backs, providing room for three passengers, form neat panel in seat back when not in use; no latches or zippers.

Equipment: Foot rest, oval shaped, double adjustable, rubber filled plush carpet covered to match floor carpet; silk rear window curtain; two sliding arm slings; assist handles at both ends of robe cord; assist grips on right and left rear quarter pillars; folding rear seat center arm rest; arm rest in each front door.

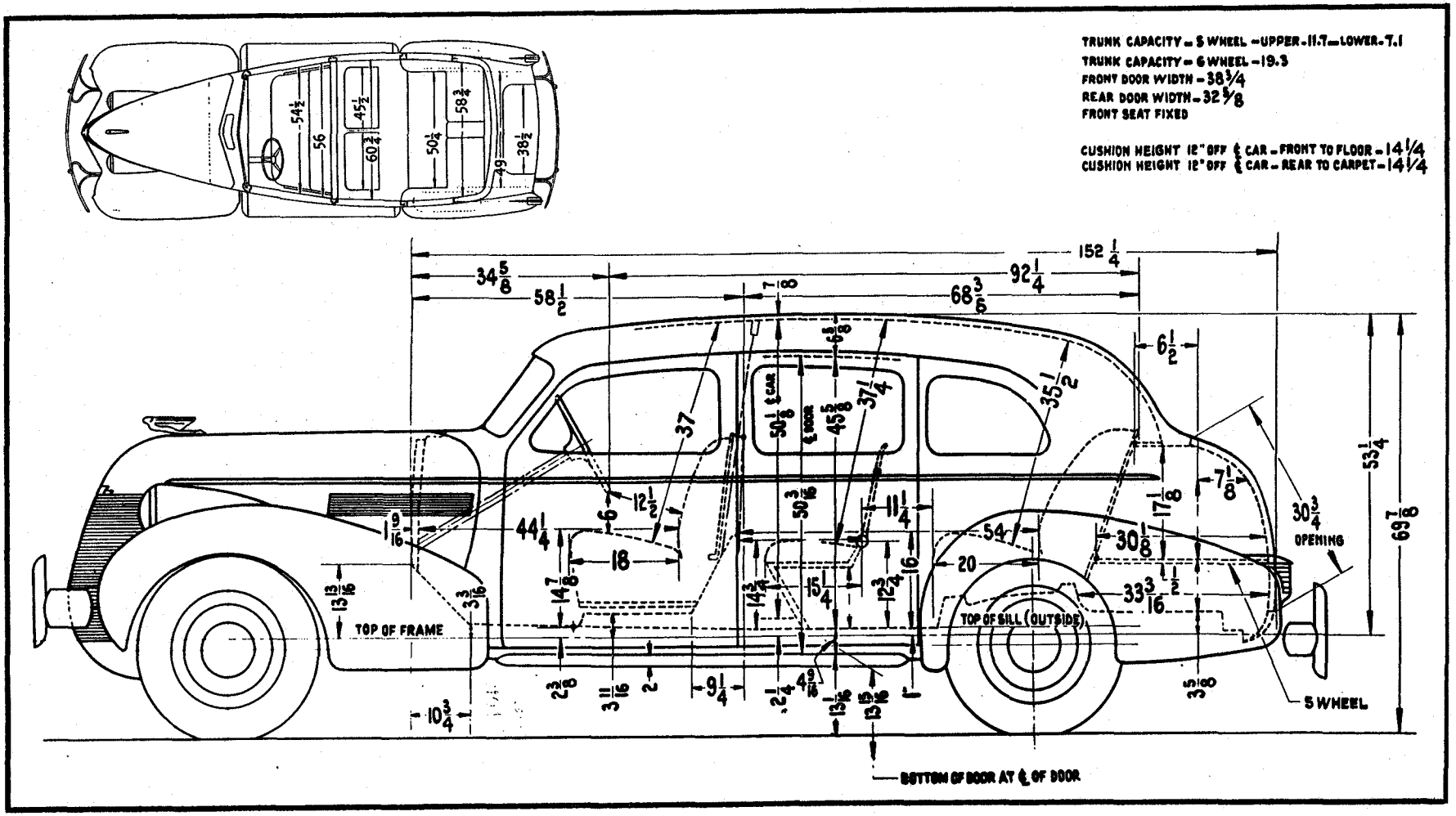
TRUNK CAPACITY - 5 WHEEL - UPPER - 11.7 - LOWER - 7.1
TRUNK CAPACITY - 6 WHEEL - 19.3
FRONT DOOR WIDTH - 38 3/4
REAR DOOR WIDTH - 32 5/8
FRONT SEAT FIXED
CUSHION HEIGHT 12" OFF ℄ CAR - FRONT TO FLOOR - 14 1/4
CUSHION HEIGHT 12" OFF ℄ CAR - REAR TO CARPET - 14 1/4
TOP OF FRAME
TOP OF SILL (OUTSIDE)
OPENING
5 WHEEL
BOTTOM OF DOOR AT ℄ OF DOOR

CADILLAC FLEETWOOD

7-TOURING IMPERIAL

Style No. 7533—(Illustrated on Page 88)

Equipment and Appointments

Rear Quarters: Metal with quarter windows.

Front Seat: Stationary, seat back solid divided cushion.

Rear Seat: Seat cushion and seat back stationary.

Lighting: Dome light operated by rear doors and left pillar switch; two rear corner lights operated by right pillar switch; additional dome light in front compartment.

Windows: Front doors are equipped with individually controlled ventilation feature. Rear quarter windows move rearwardly 3½". All ventipanes have inside locks. All windows Security Plate Glass.

Interior Panels: Straight grain walnut inlays.

Trim: Front compartment in special Down black leather; rear compartment in seven Weise cloths; exclusive patterns; tan, brown or gray; pleated mode.

Smoking Equipment: Two ash receivers and two pass-around lighters located at front of rear compartment side arm rests. pass type lighter and ash receiver in instrument control panel.

Division: Division with header bar and side pillars; the glass may be raised and lowered between front and rear compartments. Security Plate Glass.

Telephone: New design "Motorphone" consists of detachable microphone, cord and integral push button assembly located in slash pocket on right hand rear quarter above arm rest.

Extra Seats: Two forward facing, luxuriously upholstered with Marshall Springs; double throw-backs; sufficient room for three passengers; concealed in front seat back when not in use, neat panel appearance; no latches or zippers.

Equipment: Foot rest, oval shaped, double adjustment sponge rubber filled, plush carpet covered to match floor carpet; two sliding arm slings; folding center arm rest in rear seat back; arm rest on each front door; assist grips on rear pillars; two assist handles at ends of robe cord; hand mirror carried in slash pocket left hand side; electric clock recessed in division center panel.

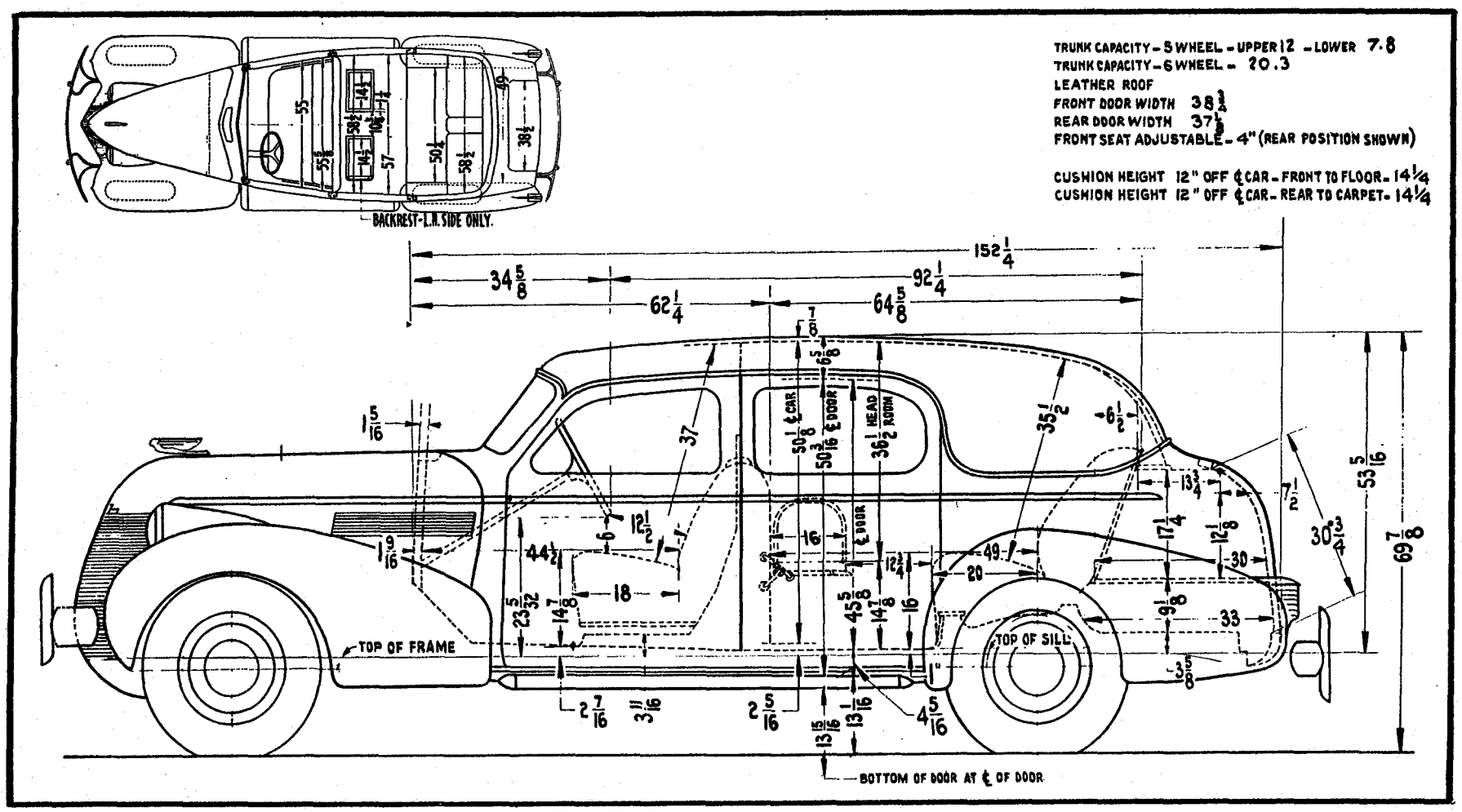
TRUNK CAPACITY - 5 WHEEL - UPPER 12 - LOWER 7.8
TRUNK CAPACITY - 6 WHEEL - 20.3
LEATHER ROOF
FRONT DOOR WIDTH 38 1/4
REAR DOOR WIDTH 37 3/4
FRONT SEAT ADJUSTABLE - 4" (REAR POSITION SHOWN)
CUSHION HEIGHT 12" OFF ℄ CAR - FRONT TO FLOOR - 14 1/4
CUSHION HEIGHT 12" OFF ℄ CAR - REAR TO CARPET - 14 1/4
BACKREST - L.H. SIDE ONLY.
152 1/4
92 1/4
64 5/8
62 1/4
34 5/8
TOP OF FRAME
TOP OF SILL
BOTTOM OF DOOR AT ℄ OF DOOR
HEAD ROOM

CADILLAC FLEETWOOD

5-PASSENGER FORMAL SEDAN (Trunk)

Style No. 7559—(Illustrated on Page 90)

Equipment and Appointments

Roof and Rear Quarters: Genuine English Landau leather; no quarter windows; not collapsible.

Front Seat: Stationary, upholstered in same material as rear compartment unless otherwise specified.

Rear Seat: Seat cushion and seat back stationary.

Lighting: Dome light operated by rear doors and left rear pillar switch; two rear corner lights operated by right rear pillar switch; additional dome light in front compartment.

Windows: Front and rear doors are equipped with individually controlled ventilation; front ventipanes have inside locks; Security Plate Glass.

Interior Panel: Straight grain walnut inlays.

Trim: Seven Weise cloths in exclusive patterns; tan, brown or gray; pleated mode.

Smoking Equipment: Concealed type cases containing ash receivers and pass-around lighters concealed in the rear quarters above side arm rests; pass type lighter and ash receiver in instrument control panel.

Division: Between front and rear compartments, no header board, modified side pillars, glass may be raised or lowered, operated by control handle on center of division.

Telephone: New design "Motorphone" consists of detachable microphone, cord and integral push button assembly located in slash pocket on right hand rear quarter above arm rest.

Extra Seats: Two opera type, left seat facing right side with lazy back, right seat facing rear, concealed in division when not in use; neat panel appearance, no latches or zippers.

Equipment: Two triangular shaped spring type foot hassocks, plush carpet covered to match floor carpet; two sliding arm slings; assist grips on rear quarter pillars; two assist handles at ends of robe cord; folding rear seat center arm rest; arm rests on each front door; hand mirror carried in slash pocket, left hand side; electric clock in front seat back.

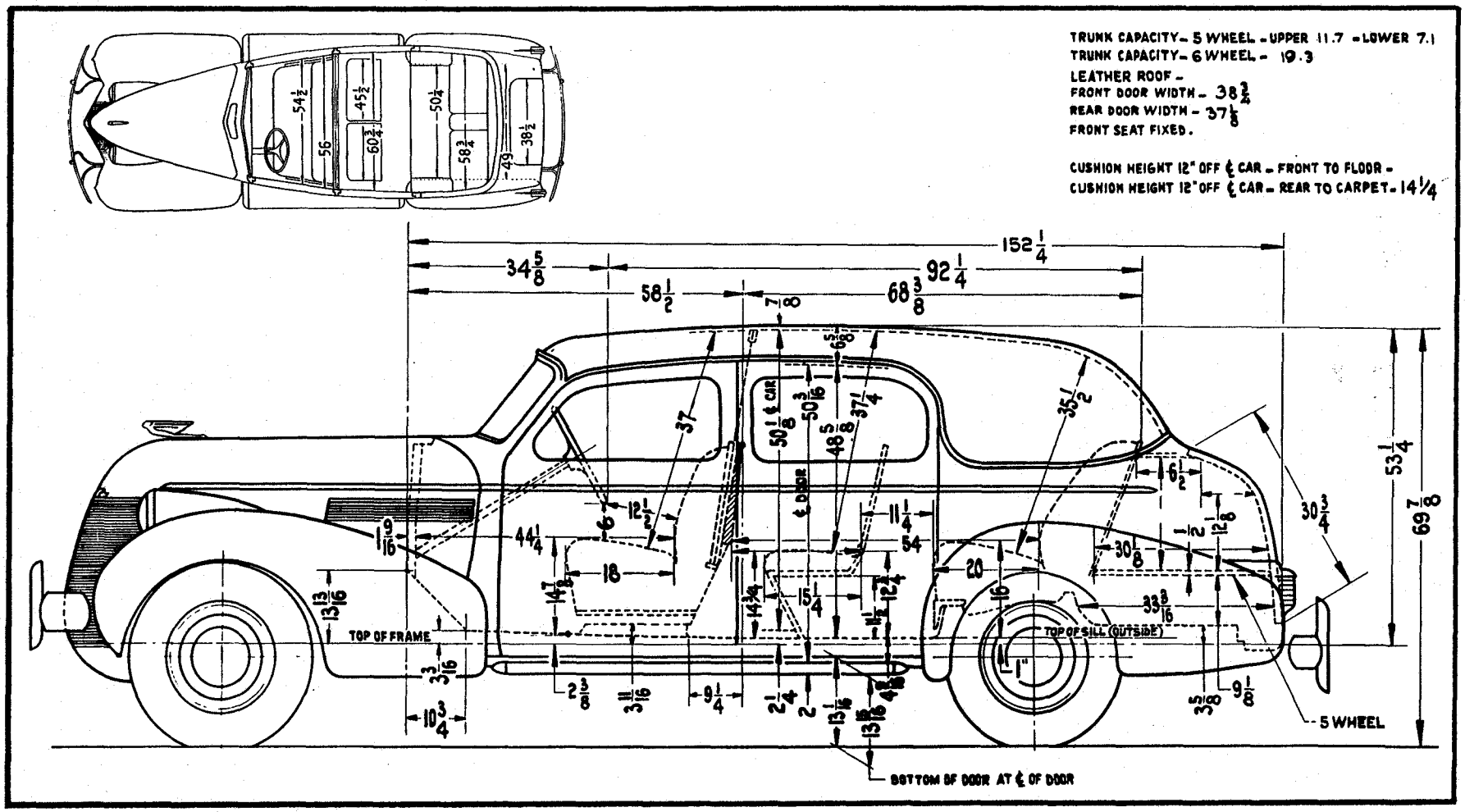
TRUNK CAPACITY - 5 WHEEL - UPPER 11.7 - LOWER 7.1
TRUNK CAPACITY - 6 WHEEL - 19.3
LEATHER ROOF -
FRONT DOOR WIDTH - 38 3/4
REAR DOOR WIDTH - 37 1/8
FRONT SEAT FIXED.
CUSHION HEIGHT 12" OFF ℄ CAR - FRONT TO FLOOR -
CUSHION HEIGHT 12" OFF ℄ CAR - REAR TO CARPET - 14 1/4
152 1/4
34 5/8
92 1/4
58 1/2
68 3/8
53 1/4
69 7/8
30 3/4
TOP OF FRAME
TOP OF SILL (OUTSIDE)
5 WHEEL
BOTTOM OF DOOR AT ℄ OF DOOR
℄ DOOR
℄ CAR

CADILLAC FLEETWOOD

7-PASSENGER FORMAL SEDAN (Trunk)

Style No. 7533-F—(Illustrated on Page 92)

Equipment and Appointments

Roof and Rear Quarters: Genuine English Landau leather no quarter windows, not collapsible.

Front Seat: Stationary, seat back solid divided cushion.

Rear Seat: Seat cushion and seat back stationary.

Lighting: Dome light operated by rear doors and left pillar switch; two rear corner lights operated by right pillar switch; additional dome light in front compartment.

Windows: Front and rear doors are equipped with individually controlled ventilation. Front ventipanes have inside locks. Security Plate Glass.

Interior Panels: Straight grain walnut inlays.

Trim: Seven Weise cloths in exclusive patterns; tan, brown or gray; pleated mode.

Smoking Equipment: Concealed type cases containing ash receivers and pass-around lighters concealed in the rear quarters above side arm rests. Pass type lighter and ash receiver in instrument control panel.

Division: Division with header bar and side pillars; the glass may be raised and lowered between front and rear compartments. Security Plate Glass.

Telephone: New design "Motorphone" consists of detachable microphone, cord and integral push button assembly located in slash pocket on right hand rear quarter above arm rest.

Extra Seats: Two forward facing, luxuriously upholstered with Marshall springs, double throw-backs; sufficient room for three passengers; concealed in front seat back when not in use, neat panel appearance; no latches or zippers.

Equipment: Foot rest, oval shaped, double adjustment sponge rubber filled, plush carpet covered to match floor carpet; two sliding arm slings; assist grips on rear pillars; folding center arm rest in rear seat back; arm rest on each front door; two assist handles at ends of robe cord; hand mirror carried in slash pocket left hand side; electric clock recessed in division center panel.

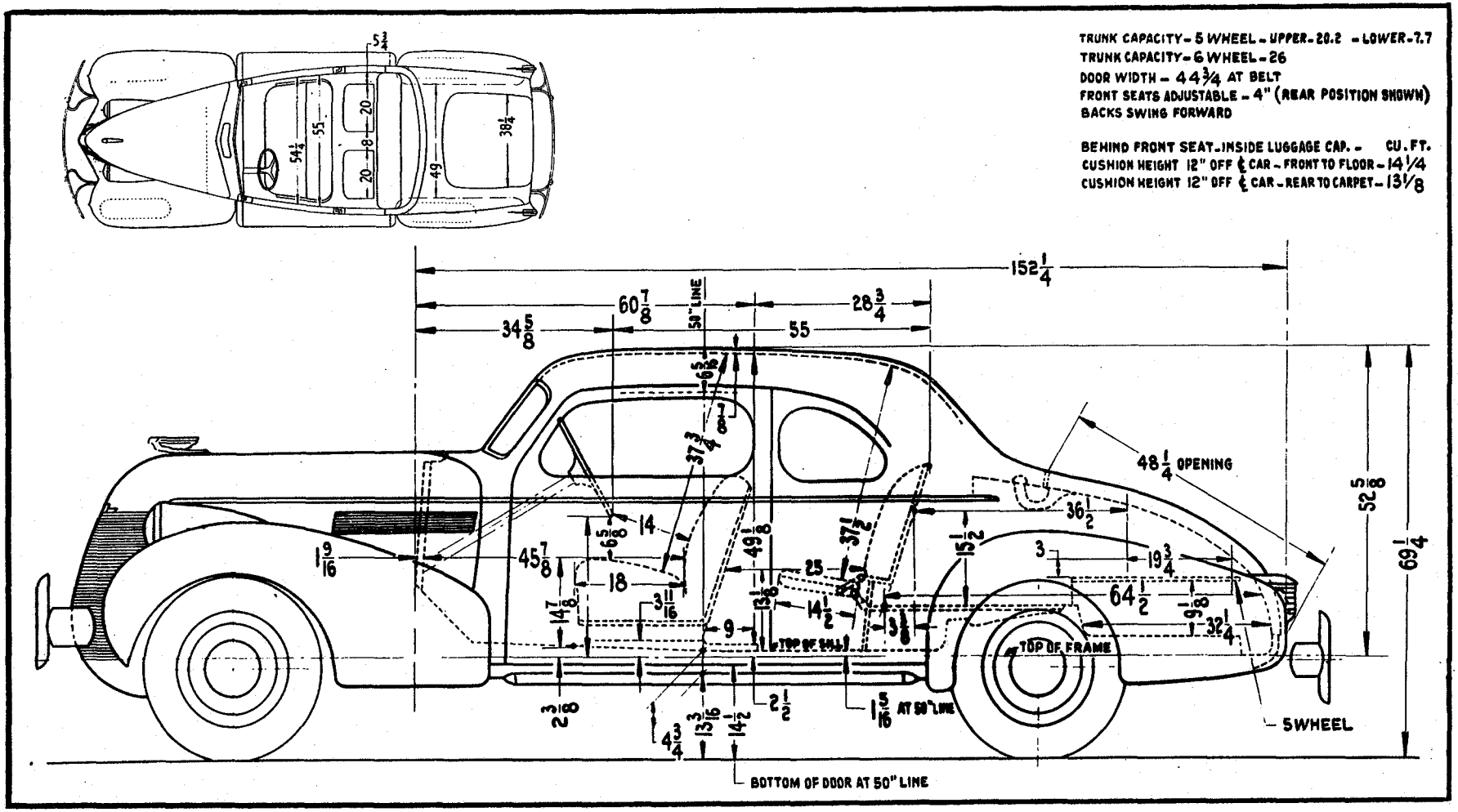
TRUNK CAPACITY - 5 WHEEL - UPPER - 20.2 - LOWER - 7.7
TRUNK CAPACITY - 6 WHEEL - 26
DOOR WIDTH - 44 3/4 AT BELT
FRONT SEATS ADJUSTABLE - 4" (REAR POSITION SHOWN)
BACKS SWING FORWARD
BEHIND FRONT SEAT - INSIDE LUGGAGE CAP. - CU. FT.
CUSHION HEIGHT 12" OFF ℄ CAR - FRONT TO FLOOR - 14 1/4
CUSHION HEIGHT 12" OFF ℄ CAR - REAR TO CARPET - 13 1/8
152 1/4
60 7/8
28 3/4
34 5/8
55
50" LINE
48 1/4 OPENING
52 5/8
69 1/4
TOP OF SILL
TOP OF FRAME
1 5/16 AT 50" LINE
5 WHEEL
BOTTOM OF DOOR AT 50" LINE

CADILLAC FLEETWOOD

2-PASSENGER COUPE

Style No. 7567—(Illustrated on Page 94)

Equipment and Appointments

Rear Quarter: Metal with quarter windows.

Opera Seats: Located behind front seat, facing forward; fold in back wall when not in use.

Interior Panels: Straight grain walnut inlays.

Trim: Seven Weise cloths in exclusive patterns; tan, brown or gray; pleated mode.

Smoking Equipment: Pass-around cigar lighter and ash tray located in instrument control panel; ash receivers on both rear quarters.

Lighting: Dome light controlled by doors and right hand pillar switch.

Front Seat: Straight across with seat fully adjustable 4" with ¾" rise, back only divided; seat backs swing forward allowing access to opera seats or luggage compartment as desired.

Windows: Doors equipped with individually controlled ventilation feature. Rear quarter windows slide rearwardly. All ventipanes have inside locks. Security Plate Glass.

Equipment: Side arm rests on doors; silk curtain on back window; two larger interior sun visors, fully adjustable; grip handles on right and left pillars; robe cord on each side of divided front seat back; recessed foot rest; large luggage compartment below rear deck.

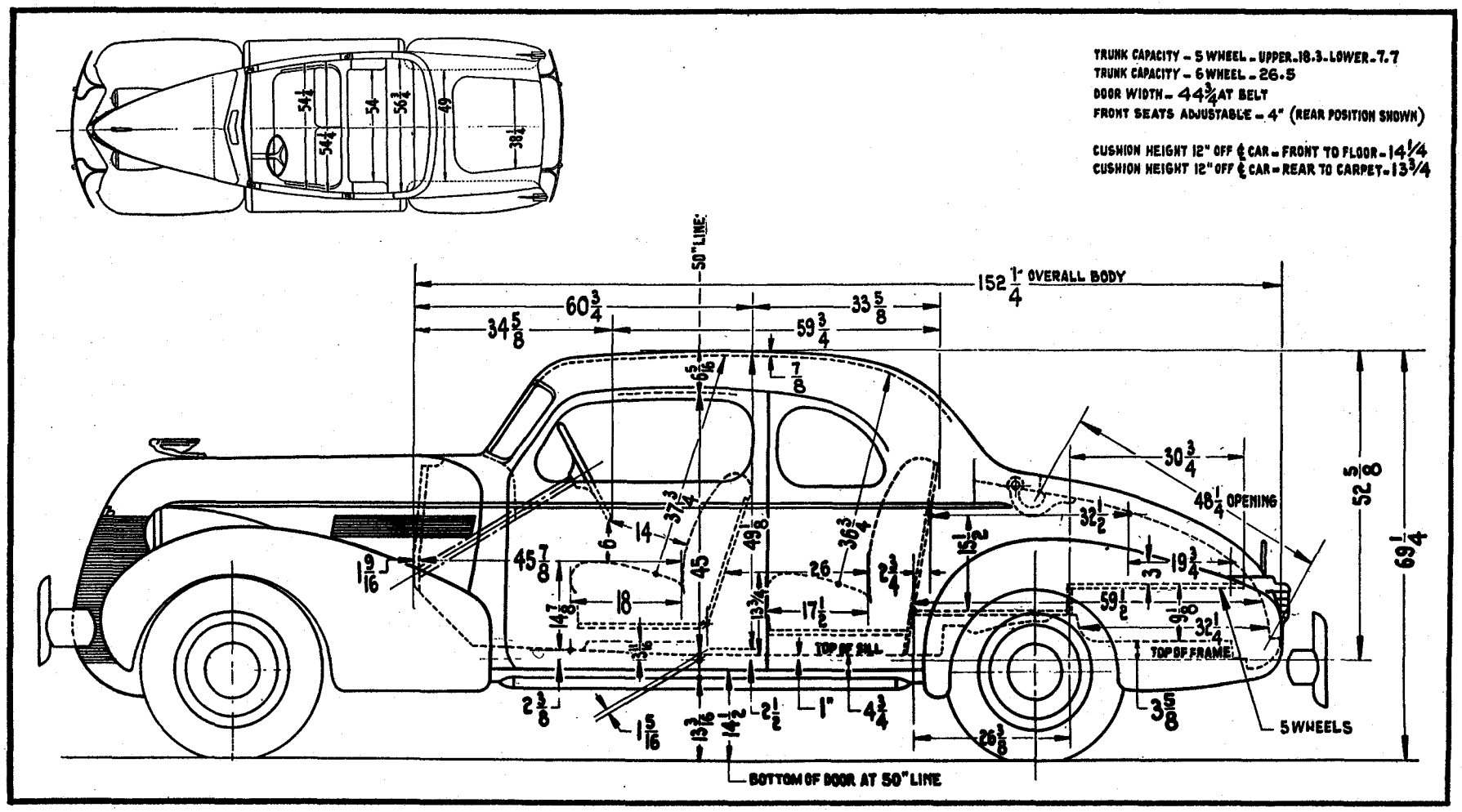
TRUNK CAPACITY - 5 WHEEL - UPPER-18.3-LOWER-7.7
TRUNK CAPACITY - 6 WHEEL - 26.5
DOOR WIDTH - 44 3/4 AT BELT
FRONT SEATS ADJUSTABLE - 4" (REAR POSITION SHOWN)
CUSHION HEIGHT 12" OFF ℄ CAR - FRONT TO FLOOR - 14 1/4
CUSHION HEIGHT 12" OFF ℄ CAR - REAR TO CARPET - 13 3/4
50" LINE
152 1/4 OVERALL BODY
60 3/4
33 5/8
34 5/8
59 3/4
48 1/4 OPENING
52 5/8
69 1/4
TOP OF SILL
TOP OF FRAME
5 WHEELS
BOTTOM OF DOOR AT 50" LINE

CADILLAC FLEETWOOD

5-PASSENGER COUPE

Style No. 7557-B—(Illustrated on Page 96)

Equipment and Appointments

Rear Quarter: Metal with quarter windows.

Rear Seat: Full across behind front seat, stationary.

Interior Panels: Straight grain walnut inlays.

Trim: Seven Weise cloths in exclusive patterns; tan, brown or gray; pleated mode.

Smoking Equipment: Pass-around cigar lighter and ash tray located in instrument control panel. Ash receivers forward of both rear seat arm rests.

Lighting: Dome light operated by doors and right rear pillar switch.

Front Seat: Straight across with seat fully adjustable 4″ with ¾″ rise, back only divided; seat backs swing forward allowing access to rear seat.

Windows: Doors equipped with individually controlled ventilation feature. Rear quarter windows slide rearwardly. All ventipanes have inside locks. Security Plate Glass.

Equipment: Side arm rests on doors; silk curtain on back window; two larger interior sun visors, fully adjustable; grip handles on right and left pillars; slash pockets in side of each rear arm rest; robe cords on each side of divided front seat back; recessed foot rests; large luggage compartment below rear deck.

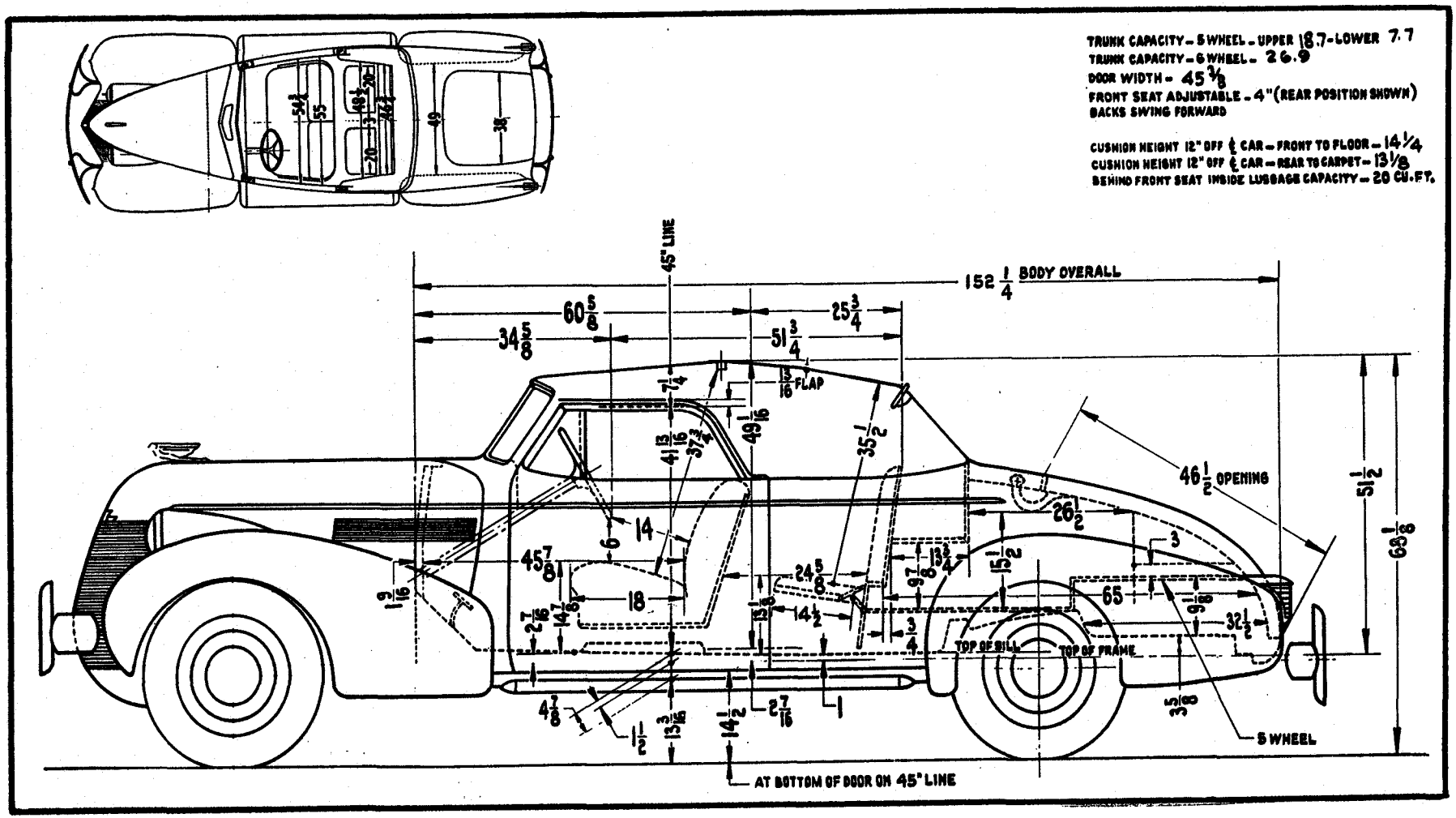
TRUNK CAPACITY - 5 WHEEL - UPPER 18.7 - LOWER 7.7
TRUNK CAPACITY - 6 WHEEL - 26.9
DOOR WIDTH - 45 3/8
FRONT SEAT ADJUSTABLE - 4" (REAR POSITION SHOWN)
BACKS SWING FORWARD
CUSHION HEIGHT 12" OFF ℄ CAR - FRONT TO FLOOR - 14 1/4
CUSHION HEIGHT 12" OFF ℄ CAR - REAR TO CARPET - 13 1/8
BEHIND FRONT SEAT INSIDE LUGGAGE CAPACITY - 20 CU. FT.
45" LINE
152 1/4 BODY OVERALL
60 5/8
25 3/4
34 5/8
51 3/4
7 1/4
5/16 FLAP
49 1/16
35 1/2
46 1/2 OPENING
26 1/2
51 1/2
68 1/8
14
6
45 7/8
18
24 5/8
15 1/2
3
65
32 1/2
TOP OF SILL
TOP OF FRAME
5 WHEEL
14 1/2
1
AT BOTTOM OF DOOR ON 45" LINE

CADILLAC FLEETWOOD

CONVERTIBLE COUPE

Style No. 7557—(Illustrated on Page 98)

Equipment and Appointments

Top and Rear Quarters: Burbank fully collapsible, folding into special compartment fully concealed.

Front Seat: Straight across with seat fully adjustable 4″ with ¾″ rise on seat cushion, back only divided, seat backs swing forward allowing access to opera seats.

Opera Seats: Two, directly behind front seat, facing forward, fold up when not in use.

Smoking Equipment: Pass around cigar lighter and ash tray located in instrument control panel; ash receivers on both rear side quarters.

Interior Panels: Straight grain walnut inlays.

Trim: Options of black, tan, gray or green genuine cowhide; tan or gray Bedford Cords.

Windows: Front doors are equipped with individually controlled ventilation feature. All windows Security Plate Glass.

Equipment: Side arm rests on doors; two larger interior dual purpose sun shades, adjustable; robe cord on each side of divided front seat back; recessed foot rest; dust boot for top when folded; large luggage compartment under rear deck.

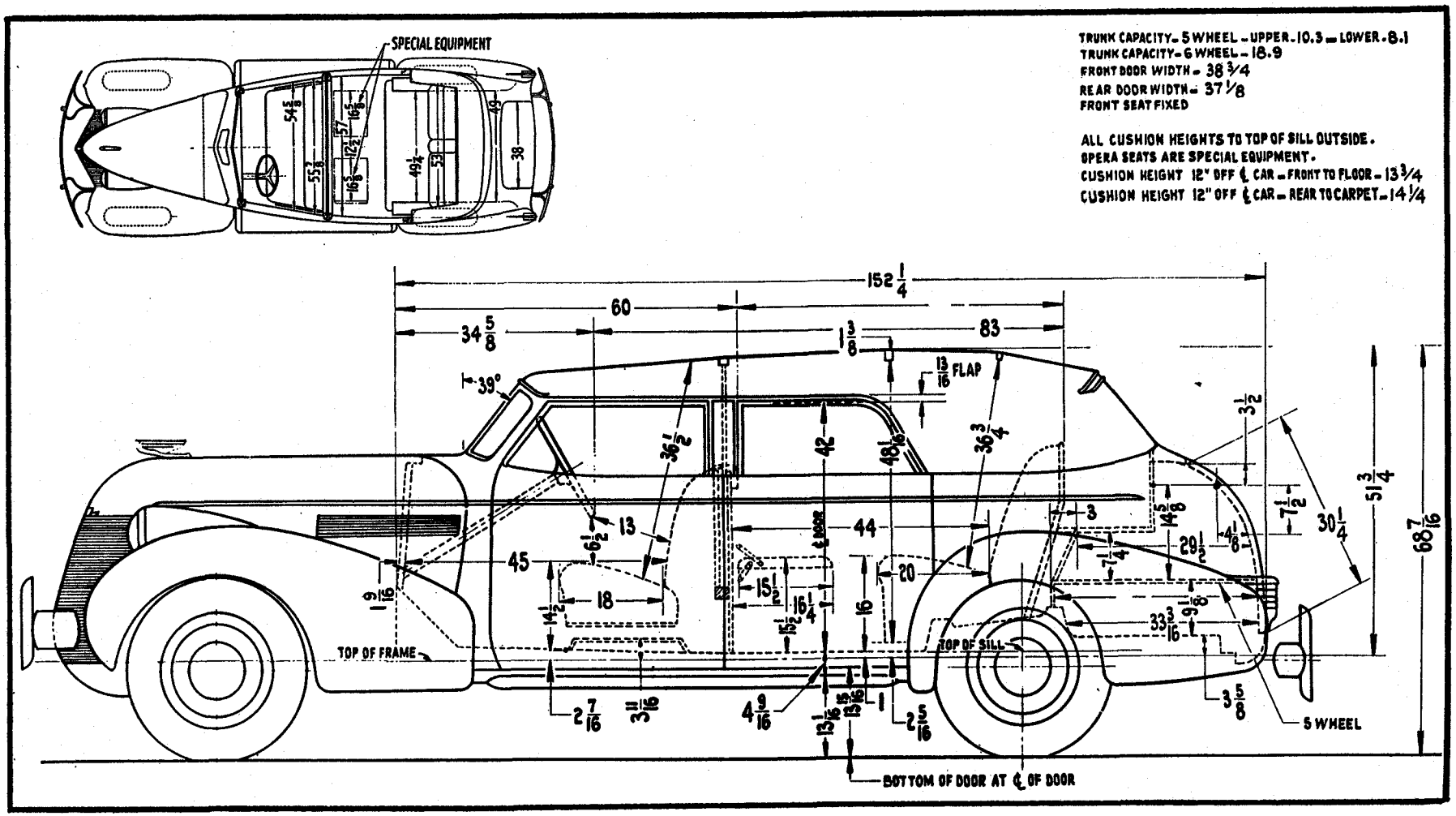
SPECIAL EQUIPMENT
TRUNK CAPACITY - 5 WHEEL - UPPER - 10.3 - LOWER - 8.1
TRUNK CAPACITY - 6 WHEEL - 18.9
FRONT DOOR WIDTH - 38 3/4
REAR DOOR WIDTH - 37 1/8
FRONT SEAT FIXED
ALL CUSHION HEIGHTS TO TOP OF SILL OUTSIDE.
OPERA SEATS ARE SPECIAL EQUIPMENT.
CUSHION HEIGHT 12" OFF ℄ CAR - FRONT TO FLOOR - 13 3/4
CUSHION HEIGHT 12" OFF ℄ CAR - REAR TO CARPET - 14 1/4
152 1/4
60
34 5/8
1 3/8
83
13/16 FLAP
39°
TOP OF FRAME
TOP OF SILL
5 WHEEL
BOTTOM OF DOOR AT ℄ OF DOOR
51 3/4
68 7/16
30 1/4
33 3/16
29 1/2
44
45
42
20
18
16
13
3

CADILLAC FLEETWOOD

CONVERTIBLE SEDAN (Trunk)

Style No. 7529—(Illustrated on Page 100)

Equipment and Appointments

Top and Rear Quarters: Burbank fully collapsible, folding into special compartment, fully concealed.

Front Seat: Stationary.

Rear Seat: Seat cushion and seat back stationary.

Interior Panels: Straight grain walnut inlays.

Trim: Tan, gray, green or black genuine cowhide; tan or gray Bedford Cord.

Lighting: Courtesy lights recessed in front of rear compartment side arm rests, operated by switch on rear doors, and switch on right rear arm rest.

Windows: Front doors are equipped with individually controlled ventilation feature. All windows Security Plate Glass.

Smoking Equipment: Two pass-around lighters recessed in front of ash receivers, located in front of rear side arm rests. Pass-around lighter and ash receiver in instrument control panel recess.

Equipment: Two triangular shaped spring type foot hassocks, plush carpet covered to match floor carpet; two larger interior dual purpose sun shades, adjustable; folding center arm rest in rear seat back; arm rest on each front door; robe cord; electric clock in center garnish panel of front seat back; dust boot for top when folded.

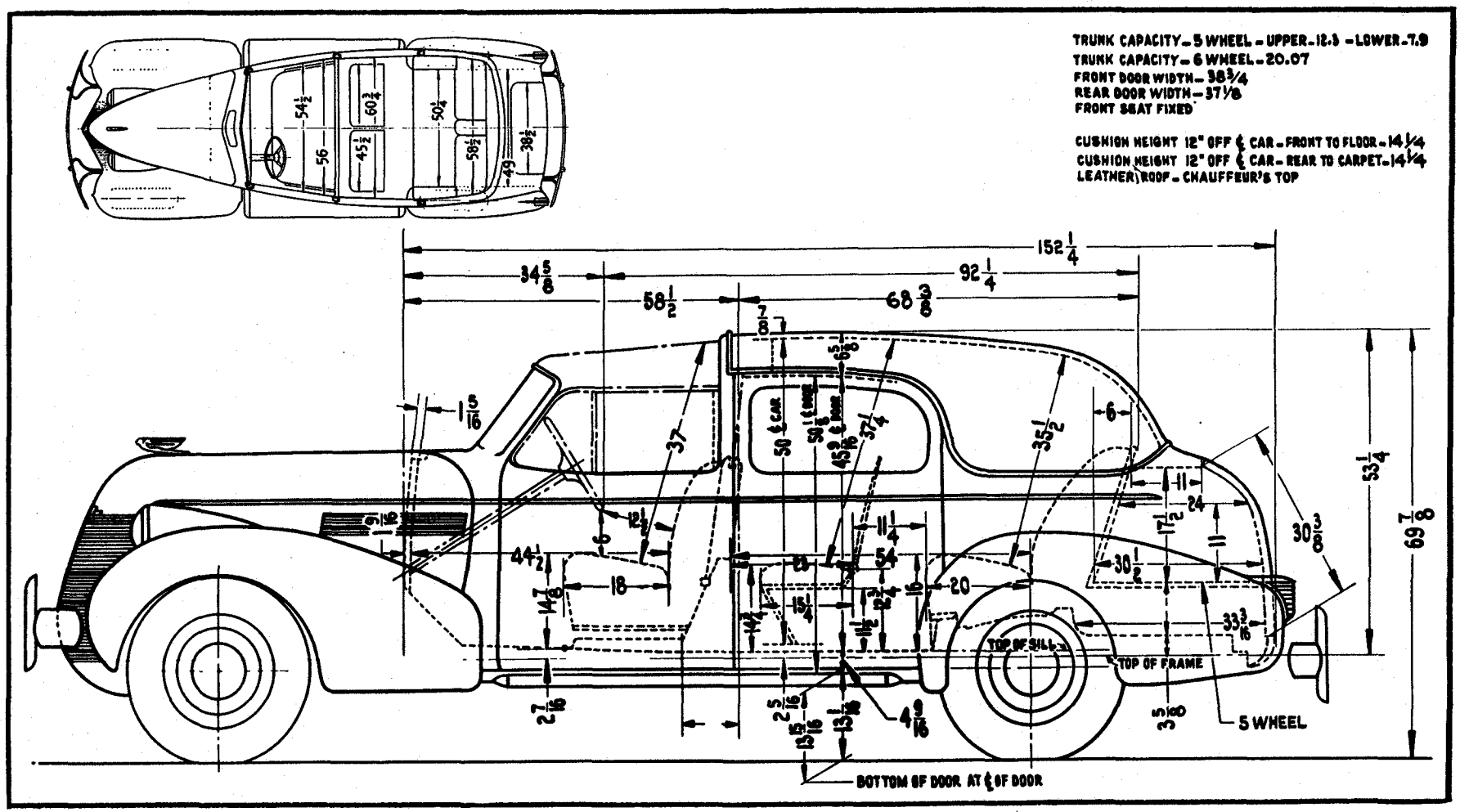
TRUNK CAPACITY - 5 WHEEL - UPPER - 12.3 - LOWER - 7.9
TRUNK CAPACITY - 6 WHEEL - 20.07
FRONT DOOR WIDTH - 38 3/4
REAR DOOR WIDTH - 37 1/8
FRONT SEAT FIXED
CUSHION HEIGHT 12" OFF ℄ CAR - FRONT TO FLOOR - 14 1/4
CUSHION HEIGHT 12" OFF ℄ CAR - REAR TO CARPET - 14 1/4
LEATHER ROOF - CHAUFFEUR'S TOP
152 1/4
92 1/4
68 3/8
58 1/2
34 5/8
TOP OF SILL
TOP OF FRAME
5 WHEEL
BOTTOM OF DOOR AT ℄ OF DOOR

CADILLAC FLEETWOOD

TOWN CAR (Trunk)

Style No. 7553—(Illustrated on Page 102)

Equipment and Appointments

Roof and Rear Quarter: Genuine English Landau leather, no quarter windows, not collapsible. Front compartment has removable roof.

Front Seat: Stationary, seat back solid.

Rear Seat: Seat cushion and back stationary.

Lighting: Dome light operated by rear doors and left pillar switch; two rear corner lights, right rear pillar switch.

Windows: All Security Plate Glass. Equipped with I. C. V.

Interior Panels: Straight grain walnut inlays.

Trim: Front compartment in special Down black cowhide; rear compartment in seven exclusive Weise cloth patterns; tan, brown or gray; pleated mode.

Smoking Equipment: Concealed type cases containing ash receivers and pass-around lighters located above side arm rests; pass-around lighter and ash receiver in instrument control panel.

Division: With header board and side pillars; glass may be raised and lowered between front and rear compartments. Security Plate Glass.

Telephone: New design "Motorphone," detachable microphone, cord and integral push button assembly located in slash pocket on right hand rear quarter above arm rest.

Extra Seats: Two facing forward, luxuriously upholstered with Marshall springs; double throw backs, providing room for three passengers; concealed when not in use, neat panel appearance, no latches or zippers.

Equipment: Two triangular shaped spring type foot hassocks, plush carpet covered to match floor carpet; two sliding arm slings; grip handles located on right and left hand rear pillars; assist handles on both ends of robe cord; folding center arm rest in rear seat back; arm rest on each front door; hand mirror carried in slash pocket, left hand side; electric clock recessed in division center panel.

CADILLAC FLEETWOOD BUSINESS CARS

Cadillac offers two business cars to fulfill the demand for eight passenger types with generous interior dimensions at a lower price level than the regular custom Fleetwoods.

Another important source of sales for these specialized Fleetwood types is among funeral directors and renters who wish to standardize their livery equipment with their Cadillac hearse chassis.

The new Fleetwood Business Cars are available in an 8-passenger Touring Sedan and 8-passenger Touring Imperial Sedan. They employ the new and refined 141 inch wheelbase Fleetwood chassis and the improved 140 horsepower Fleetwood V-8 engine. A voltage regulated Peak Load Generator is used.

Exterior appearance and styling reflects the dignity so impressive in the 1939 Fleetwoods—styling distinctive to these fine cars alone.

A notable and exclusive feature within these new Business Cars is the novel Fleetwood auxiliary seat construction which provides legroom, foot space, and comfort in double throw-back seats not achieved in seven passenger models of any other make.

Six upholstery options are available in tan or gray Bedford Cords, ribbed Broadcloths and plain Broadcloths. Additional interior features are: ebony finished garnish mouldings, side arm rests, back window curtain, carpet covered foot rail and assist straps.

A folder will be available containing detailed descriptions and specifications on these new Fleetwood Business Cars and Cadillac-LaSalle Commercial Chassis.

CADILLAC V-TYPE ENGINE DESIGN

The Only Engineeringly Correct Design for Engines of Eight or More Cylinders

Cadillac has concentrated on V-type engines for twenty-four years, utilizing this principle in engines of eight, twelve and sixteen cylinders. On land, sea and in the air this design has proved itself to be by far the best because of its compactness, rigidity, efficiency, hence its DEPENDABILITY. This is one of the first requirements demanded by motor car buyers.

As early as 1922, the eminent automotive engineer, C. F. Kettering, said, "With the unlimited funds and vast resources of the General Motors Corporation at my command, were I assigned the task of building another truly fine motor car engine where the size of the engine required of itself eight or more cylinders, it must needs be of the V-type design."

More costly to build than in-line types because of the necessity for expensive, specialized machinery to manufacture angle-spaced banks of cylinders, Cadillac has utilized the vast resources and funds of General Motors and its own unparalleled experience to bring the present Cadillac-LaSalle V-8's and the new Sixteen to unrivalled peaks of performance, smoothness, economy and long life.

Operating Smoothness and Long Engine Life

Engines of V-type design are far simpler, more direct and efficient in their operation than in-line type engines. There are numerous examples of this V-type simplicity which promote longer engine life.

Contrast, for example, the long straight eight crankshaft and nine small bearings with the short crankshaft

and three large bearings of the V-8. It is obviously easier and less costly to align three rather than nine, seven or even five main bearings.

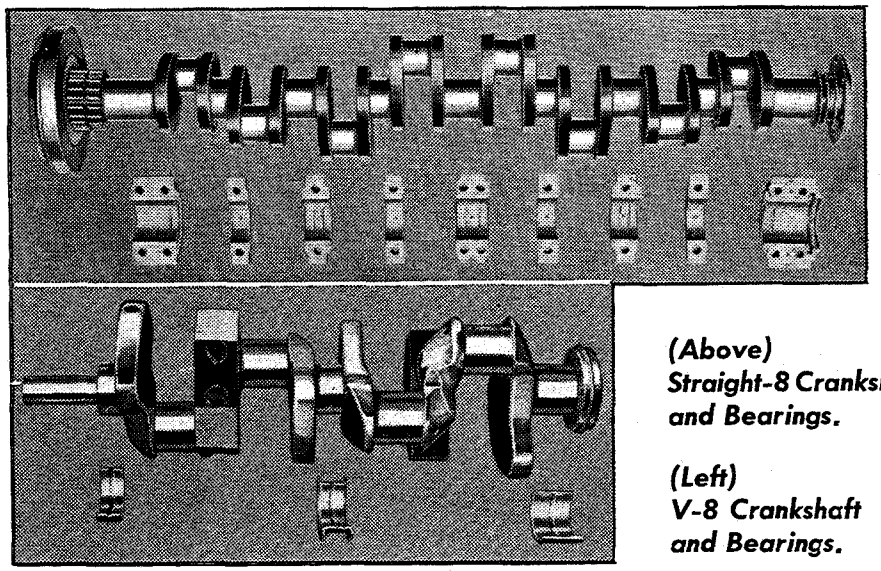

(Above)
Straight-8 Crankshaft and Bearings.

(Left)
V-8 Crankshaft and Bearings.

An important factor in long engine life is absence of vibration. In fact, vibration has a very definite bearing on the wearing life and quietness of all parts of the chassis and body, hence all manufacturers constantly strive to make their engines run more smoothly. In the 90° V-type 8 Cadillac has realized the smoothest of all eight cylinder engines and in the 135° V-type 16 the smoothest automobile engine ever built.

In a V-8 with cylinders paired at ninety degrees, or at right angles to each other, the inertia force built up within one cylinder is completely offset by the equivalent inertia force of the opposite cylinder. One force counteracts or neutralizes a second equal force when they meet at the crankshaft. Therefore, main bearings have no work to do other than supporting the weight of the crankshaft and absorbing reactions from explosions within the cylinders. In the case of a straight eight engine there is no pairing of cylinders. The front cylinder balances the rear cylinder of the engine, conse-

quently to cancel each other, the inertia forces must be transmitted from one end of the crankshaft to the other. This increases crankshaft and crankcase stresses, increases the work which main bearings have to do, and by increasing crankshaft deflection, causes the typical straight eight high speed vibration.

Work which main bearings must do has been accurately measured by Cadillac engineers. Taking a Cadillac V-8 engine and a typical straight eight engine of practically identical cubic inch displacement they found that the total average maximum load or pressure imposed upon the three V-8 main bearings is 173 pounds per square inch, and on the five straight eight bearings 791 pounds per square inch. Five small bearings having no greater area must do five times the work of three large bearings. Operating smoothness, dependability and long life is obviously greater in Cadillac V-type engines.

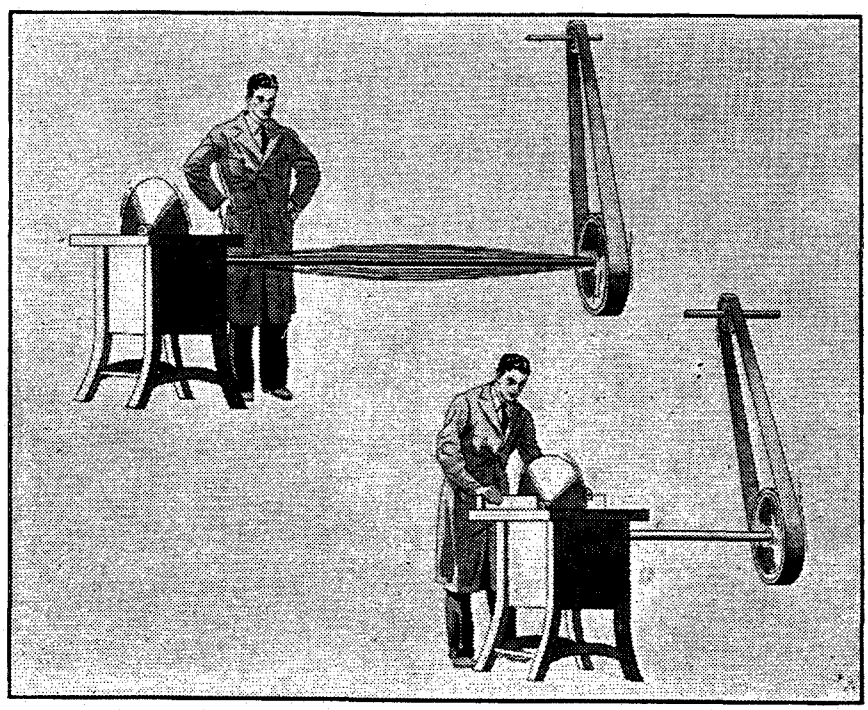

A long driven shaft has far more whip than a shorter shaft.

A V-type eight cylinder engine is, by comparison with an eight-in-line engine, a twin four. Hence, it is

much shorter and more compact. Given two engines of equal cubic inch displacement, the straight eight crankshaft must be longer than the V-8 crankshaft. The V-8 crankshaft, being short and of large diameter, is much better able to withstand stresses imposed upon it by explosive forces of the engine and centrifugal forces set up by rapid crankshaft revolutions. This is an additional factor in longer life and greater smoothness.

Power forces react upon every crankshaft causing a rapid, alternate twisting first in one direction, then in another. This causes torsional vibration. The short, rigid Cadillac or LaSalle V-8 crankshaft is but negligibly affected by these twisting forces while the long shafts of the straight eight engines are seriously affected. This may be demonstrated with an ordinary desk ruler.

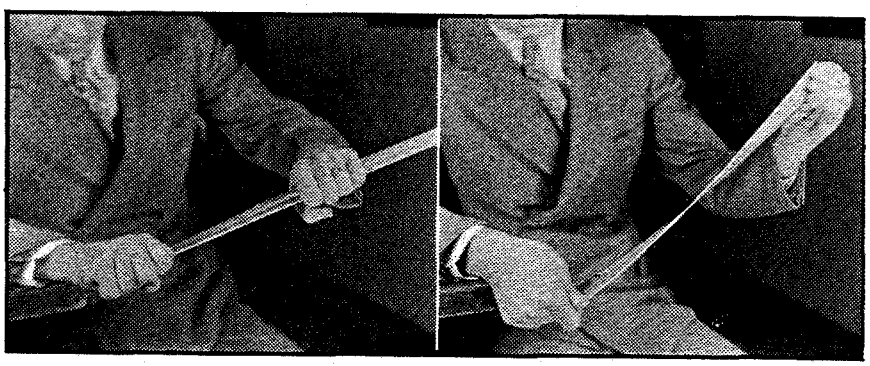

One-half Ruler Twist *Full Ruler Twist*

First, hold one-half the ruler's length and twist in opposite directions with each hand. Note how much resistance is offered to the twisting force. Now try the same procedure, using all the ruler's length. This demonstrates the effect of forces developed in a straight eight engine upon the crankshaft.

At high speeds, explosive forces within any engine tend to make the crankshaft bend. Again, the short ruggedness of the V-8 crankshaft resists this bending tendency to a far greater extent than is possible with a long, thin straight eight crankshaft. To demon-

strate, hold the ruler on the desk with one-half of its length projecting over the edge. See how rigid the ruler remains when attempts are made to snap it. Now extend the overhang of the ruler until as much as possible of its length projects over the edge of the desk. Its end may be snapped much more easily. The twisting and snapping tendencies of the crankshaft during engine

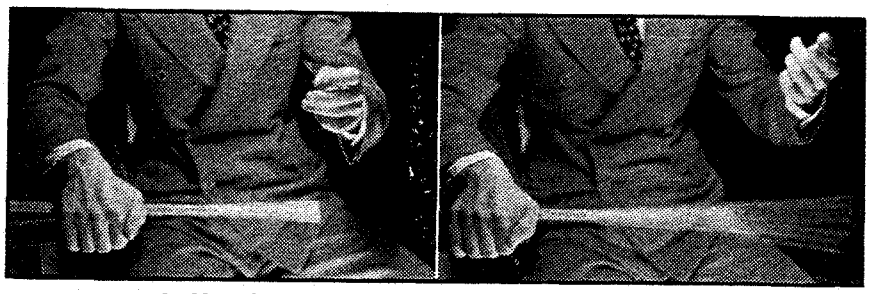

One-half Ruler Snap *Full Ruler Snap*

operation are, of course, in small fractional measurements, but relatively slight deviation from its true, predetermined position creates extreme engine vibrations. The short, rigid crankshaft of the Cadillac-LaSalle V-8 engines holds these deviations to a far lower amount than it is possible to attain with the long crankshafts of any straight eight engine. This feature, in addition to inherent cancellation of inertia forces, make the Cadillac-built 90° V-8 engines smoother and quieter to operate, and also provides longer, more dependable engine life than any straight eight powered automobile.

V-8 DESIGN PROVIDES MOST EFFICIENT OPERATION

Equalized Carburetion

With V-type design Cadillac engineers are able to centralize carburetor location above and between the two cylinder blocks. The carburetor's central location permits equal distribution of fuel mixture to every one of the eight cylinders. The farthest cylinder is only

about half the corresponding distance from the carburetor that it is in straight engines. This eliminates

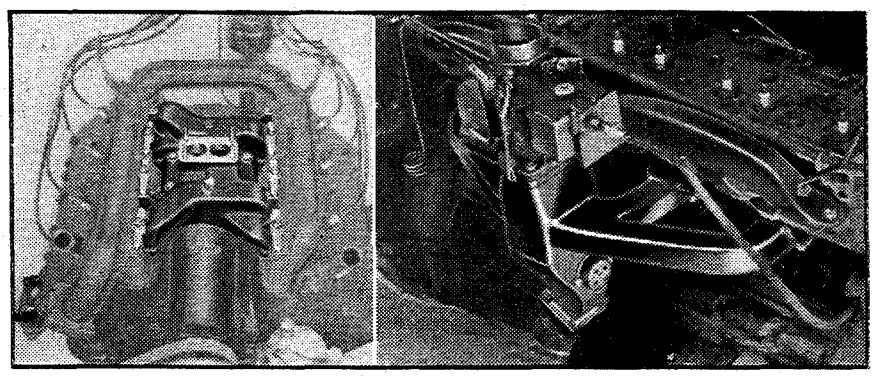

V-8 Equalized Manifold *Straight-8 Unequal Manifolds*

the need for long intake manifolds in which vaporized fuel has time to condense.

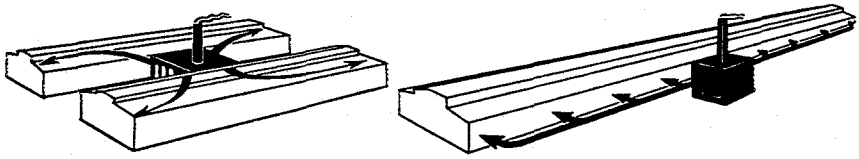

A factory is heated from a central source *Much of the heat to this factory would be wasted*

Positive Cooling

In the Cadillac V-8 water enters the right hand cylinder block under pressure. Half of the water is by-passed to the left hand block. Thus, the maximum distance that cooling water must travel through the block is far less and the variation in temperature throughout the engine is about half of that in a straight eight engine. In straight eights water enters the block at the front and must travel the full length of the engine before cooling the rear cylinder. Cooling effectiveness obviously diminishes as water passes from front to rear of the engine. This results in hotter running rear cylinders, causes uneven cylinder temperatures, and, therefore, enhances the danger of warping cylinders and valve seats which results from unequal heating. Lubricating quality of

the oil is reduced and oil consumption increases under wide variances in temperature.

The compactness of V-type design also permits a greater water cooling area around cylinders and valves.

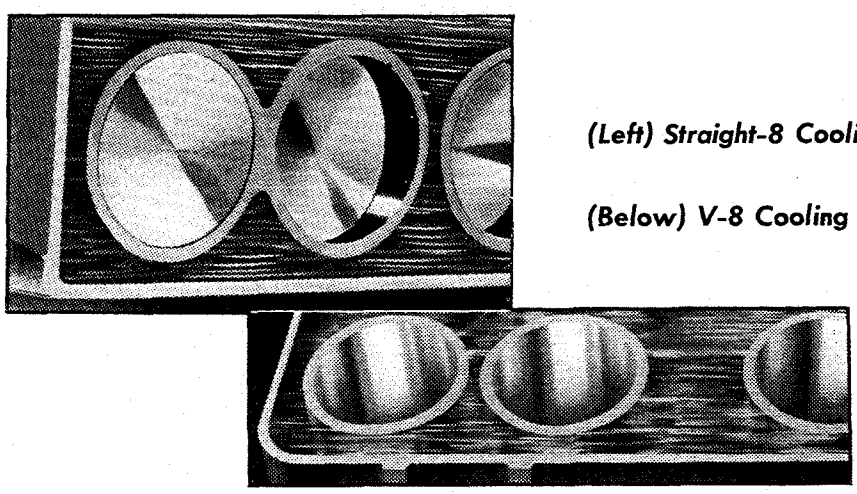

(Left) Straight-8 Cooling

(Below) V-8 Cooling

Because of the great length of a straight eight engine, which must be fitted into a limited space, water areas must be restricted in size and cooling efficiency is lost.

V-type design lends itself admirably to efficient cooling system operation with resultant operating economies and longer engine life.

Efficient Lubrication

Three large main bearings each have greater surface area, hence retain oil longer and are easier to lubricate than any one of the seven or nine small bearings of the eight-in-line crankshaft.

There are other lubrication advantages inherent in V-type design. Oil conduits throughout the engine are shorter, reducing danger of plugged oil passages. Oil is directed under pressure through drilled holes in the crankcase removing the danger of engine failure from broken oil lines where a piping system is used.

Due to the shortness of the V-8 crankcase, positive lubrication is assured, regardless of the steepness of

the road or of rapidity of deceleration. The oil pump inlet is always on the oil surface. When straight eight engines operate on grades or decelerate from high speeds the oil flows to one end of the crankcase which may result in the engine being oil starved.

Because of its compactness the short V-type eight requires fewer camshaft bearings. This further simplifies the lubricating system, insures dependability, and decreases operating costs.

V-Type Design Saves Space

Cadillac V-type design permits an engine of greater size and power output than a straight eight to be placed under much shorter hood length, leaving greater room for interior body dimensions. A V-8 engine is six inches shorter than a straight 8 engine of equal size.

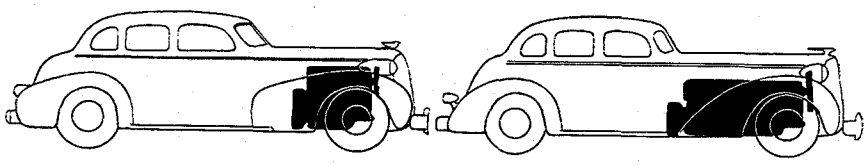

A V-type engine is six inches shorter than a straight-8 of equal size.

One outstanding superiority of the new 1939 LaSalle is the efficient use of body space. The V-8 engine is the principal factor which makes this economy of space possible. *A wheelbase five or six inches longer would be necessary if a straight 8 engine of equal size were used.*

If it were attempted to produce a straight eight engine with similar displacement in a short engine space, the bore would have to be small and the stroke long. This would result in very high piston speeds, as is found in big straight eight engines of today, with consequent increased wear and decreased engine life. Should the bores be widened and the stroke shortened, more engine space would be required. To accommodate such an engine, hood length would have to be increased and passenger space decreased even more than in the present straight eights.

V-Type Design Is Inherently More Economical

Economy of operating an automobile can only be judged by the entire duration of car ownership. It is the total cost of maintenance and repairs in addition to expenditures for gasoline and oil which determine whether or not a car is economical to own. In summarizing, consider these exclusive economy features obtainable only in Cadillac or LaSalle through the employment of the inherently balanced 90° V-8 engines:

Economy of longer, more dependable engine life through simplicity and absence of vibration in design.

Economy of a short, rugged, three bearing crankshaft.

Economy of equal distribution of fuel mixture.

Economy of more positive engine cooling.

Economy of more efficient lubrication.

Economy in engine space.

These six inherent advantages in engine design alone, without reference to Cadillac excellence in manufacture, prove the superiority of Cadillac and LaSalle over all makes of straight eight design.

1939 CADILLAC-BUILT V-8 ENGINES

There are two 90 degree V-type eight cylinder engines for 1939. Both are built from highest quality materials to Cadillac standards of precision. Both are identical except for size and minor details and continue fundamentally the design features of 1938. Major refinements have been made in *improved durability*, *greater operating economy* and *much smoother performance*.

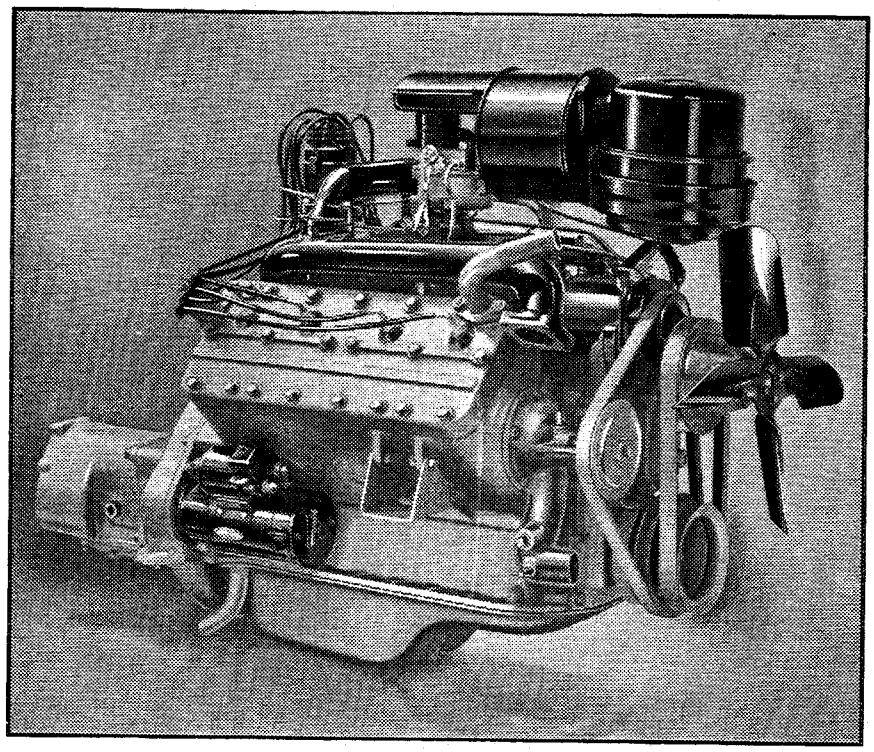

Cadillac-built 90° V-8 Engine for LaSalle

The new LaSalle is powered with a 125 horsepower V-8 engine of 322 cubic inches displacement. It is smoother and quieter because of *new engine supports* and *improved camshaft balance*. Cylinder bore durability and oil economy have been greatly increased by a *new piston ring arrangement* and *ferrox treatment* of the rings. Ferrox is an excellent abrasion-resisting material. A *new crankcase ventilating system*, positive and efficient throughout the life of the car, promotes operating

economy. The cooling system incorporates a *new radiator core*, most rugged and leak-proof ever used in a pleasure car. The *exhaust system* has many valuable refinements for greater quietness and longer life.

A new clutch, improved Syncromatic Gearshift and Syncro-Mesh Transmission insure *much easier, smoother shifting*. The new LaSalle is one of the easiest cars to drive ever built by Cadillac.

LaSalle has one of the most powerful engines of all cars in its price class, hence its *performance* continues to be *unexcelled* in 1939. In addition, gasoline and oil economy is secured, not only by inherent Cadillac design features but also by a low standard rear axle ratio of 3.92 to 1. The LaSalle engine *always* runs slowly. This is the most economical engine for its size ever built.

The V-8 engine employed in all Cadillacs also embodies all of the superlatively new design features mentioned above. This engine has 346 cubic inches displacement and develops 135 horsepower in the new Cadillac "61" and Sixty Special, 140 horsepower in the Fleetwood V-8. This higher power development in the Fleetwood is obtained by a 6.7—1 compression ratio. All other Cadillac V-8's and LaSalle have a 6.25—1 standard compression ratio.

The larger, more powerful Cadillac V-8 engines continue the Syncro-Flex Flywheel and torsional vibration damper on the crankshaft. This is indisputably the smoothest eight cylinder engine built today.

Two Peak Load generators are used. LaSalle, Cadillac "61" and Sixty Special have a voltage regulated generator. The Fleetwood V-8 generator is both voltage regulated and current controlled.

Mountings

The engine is supported at three points in live rubber. Two rubber cushions support the engine on both forward sides on the frame side bars. A third support is at the rear of the transmission extension.

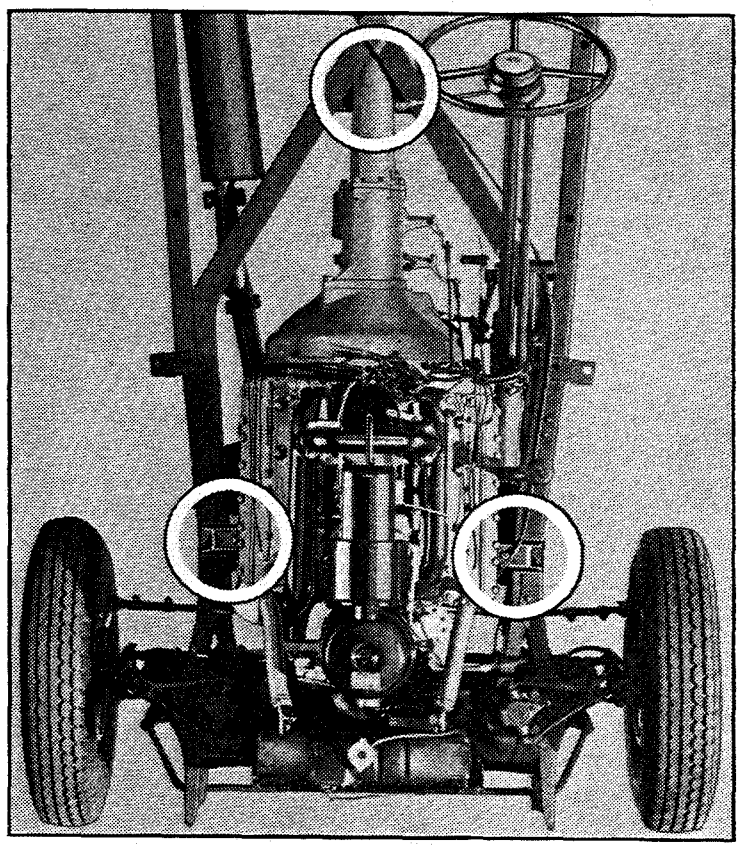

Cadillac-built V-8 Engines are Mounted at Three Points on Live Rubber

These three supports permit the engine to rock freely and utilize the engine's weight in steadying the frame. This is a factor in Cadillac-LaSalle high speed roadability. Use of three supports permits the engine to align itself with the frame like a three-legged stool.

Other methods involving only one support for the forward part of the engine do not provide sufficient rigidity for front frame arms, hence such cars have noticeably poor roadability.

1939 V-8 engines for LaSalle, "61" and Sixty Special are even *smoother* and *quieter* than before.

Forward mounts are now further inward and the mounting beneath the transmission extension is entirely new, though its novel construction principle is retained. It consists of two rubber parts: a compression cushion and a rebound cushion. The compression cushion counteracts downward thrusts of the engine caused by power forces. The rebound cushion absorbs the reactionary upward movement of the engine's weight and completely insulates engine tremors from the frame bracket.

The effect of the redesigned supports is to give *smoother performance throughout the entire speed range.*

Enbloc Cylinder and Crankcase

Crankcase and block are cast in one mold from very hard, specially prepared alloy of steel and iron. The enbloc casting is then placed in an "equalizing" oven to season the metal by slow cooling to normal tem-

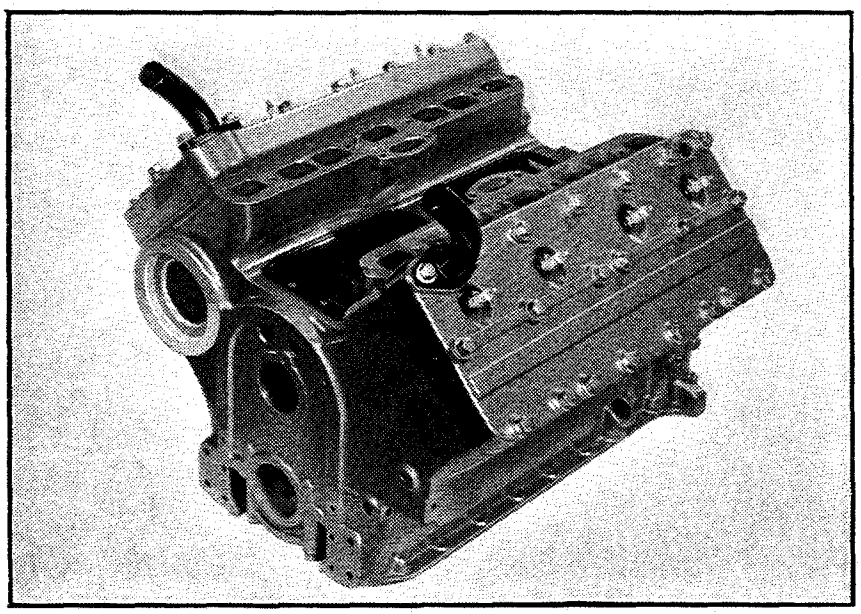

V-8 Enbloc Cylinder and Crankcase

perature. An extremely rigid, durable engine foundation is thus secured. Other manufacturers use such soft, inexpensive cylinder block iron that the material

will not resist the hammering of valves in their seats, hence have to use valve seat inserts.

Additional features of great strength result from shortness, greater width and compactness made possible by V-type design. A boss, or column, extends from the center of each cylinder block top face to the crankcase which ties the unit firmly together.

Cylinder wall thicknesses are carefully checked in all directions with an electric gauge. Cylinder walls are triple-honed which imparts a smooth, glass-like finish. This increases piston ring life, minimizes scoring possibilities, promotes even cooling, and, therefore, increases engine efficiency and long life.

Each bore is measured with an electric expanding gauge and graded into one of thirty sizes. Pistons are likewise weighed and graded into thirty sizes. This permits an exact selective fitting of piston-to-bore to .00007 inches variation in clearance. Such precision insures maximum operating efficiency of the engine.

Cylinder Head

The cylinder head is cast of the same material as the block to insure uniform expansion of the two units when heated. This avoids development of leaks and gasket troubles. The head is light in weight for flexibility which provides a better seal at the union with the block.

The compression ratio for V-8 engines employed in LaSalle, "61" and Special is 6.25 to 1. This high standard ratio permits the use of standard grades of fuel without development of pinging noises.

The Fleetwood V-8 has a 6.7—1 compression ratio which increases its power output to 140 H.P. Its performance is much better than any other eight of comparable size or price. Ethyl fuel is required.

Pistons and Rings

Aluminum alloy pistons are subjected to a costly anodizing process. This is a special electro-chemical bath treatment which gives a gem-like hardness to the light weight aluminum. Advantages of Anodized Aluminum Alloy pistons are: lighter weight, greater strength, and greatly minimized wear and scuffing, particularly when the engine is started when cold.

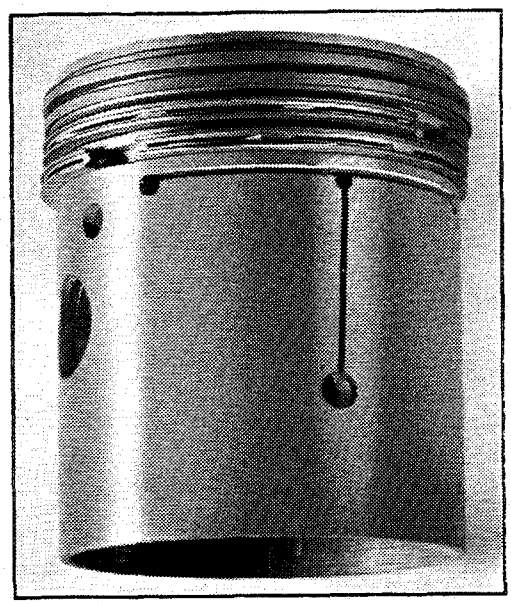

Anodized Aluminum Alloy, T-slot, 4-Ring Piston

The T-slot type of piston is used for positive assurance of uniform expansion and contraction. The T-slot permits walls of the piston to expand freely at all points, thereby fitting itself evenly and correctly within the cylinder bore. This is impossible in the Invar-strut type because such pistons are held rigidly at the struts expanding unequally at other points.

Each piston is fitted with two oil rings and two compression rings. An *important new improvement in cylinder bore durability and oil economy results from a revised piston ring arrangement and treatment of the rings with ferrous oxide*. This abrasion resistant mate-

rial is a new discovery which contributes more to longer engine life and operating economy than any engine development of recent years.

Wrist pins are first measured to one-tenth of one-thousandth variation in concentricity with a special micrometer before being fitted to the pistons by hand. This excellence in precision is exclusive to Cadillac. Pistons for the more powerful Cadillac V-8's have wrist pins of special strength. They are bored with tapered ends to give greater thickness at the center for increased strength and minimum weight.

Connecting Rods

Connecting rods of carbon steel are strong and light in weight. Each rod is split at an angle which permits quick removal of the rod through the top of the cylinder bore facilitating service work. Bearings are diamond bored for true center accuracy.

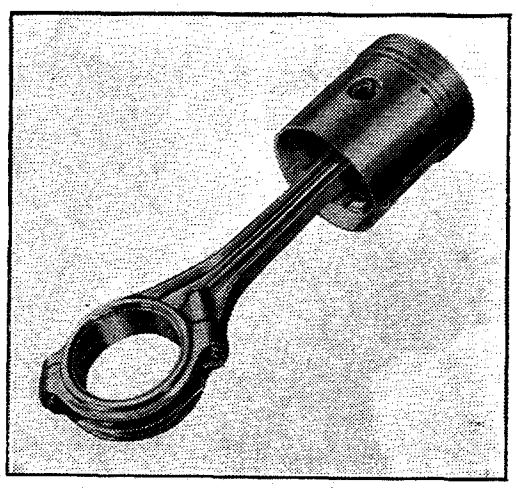

Rifle-Drilled Connecting Rod

Positive wrist pin lubrication is made possible by rifle-drilled holes in each rod from the big end bearing directly to each wrist pin bearing.

Cylinder bores are cross lubricated. Rods of the right hand cylinder block lubricate the left cylinder block

bores and vice versa. With each revolution of the connecting rod oil is squirted out through a small hole in the connecting rod's big end. Such positive lubrication is essential to prevent piston-to-bore wear in a cold engine. It is another exclusive feature only obtainable with V-type design.

Each piston, connecting rod, bearing and wrist pin assembly is balanced to closest precision limits of $\frac{1}{32}$ of an ounce for perfect running balance and engine smoothness.

Crankshaft

The crankshaft is a high carbon steel forging and weighs ninety pounds. It is carefully balanced on a

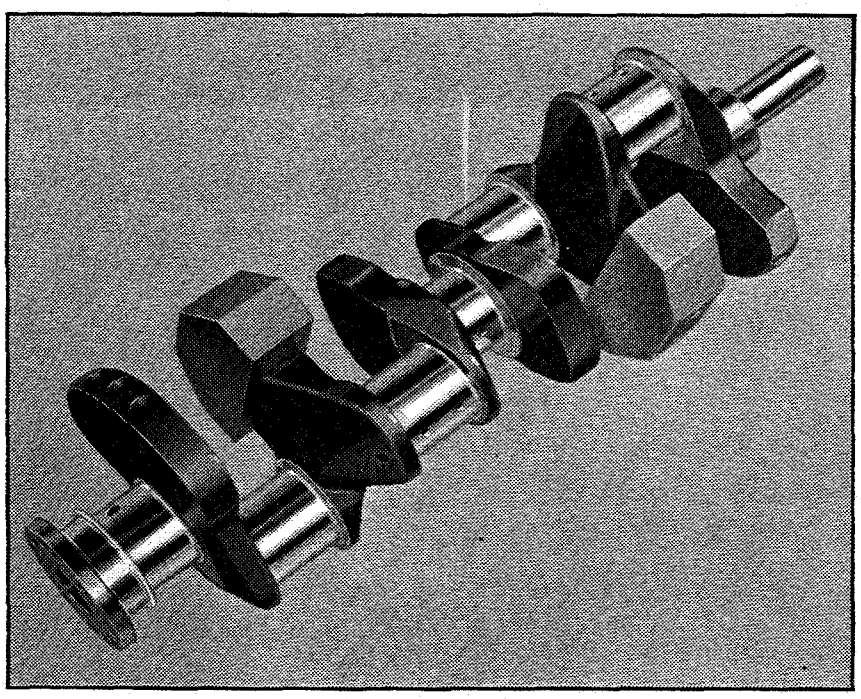

Short, Rugged Crankshaft

special machine to $\frac{1}{16}$ ounce-inch limit and again balanced after flywheel and clutch are attached to $\frac{1}{2}$ ounce-inch limit.

The extreme 27 inch shortness, possible only in V-type design, eliminates tendencies to whip or vibrate which cannot be avoided in long straight eight crankshafts.

Large diameter bearing journals and $\frac{1}{4}$ inch overlap of these journals and their crankpins are additional features of V-8 crankshaft rigidity. Use of six counterweights gives each crankshaft cheek its own counterweight which counterbalances each crankpin and connecting rod at the point of disturbance. This contributes to smoothness and balance.

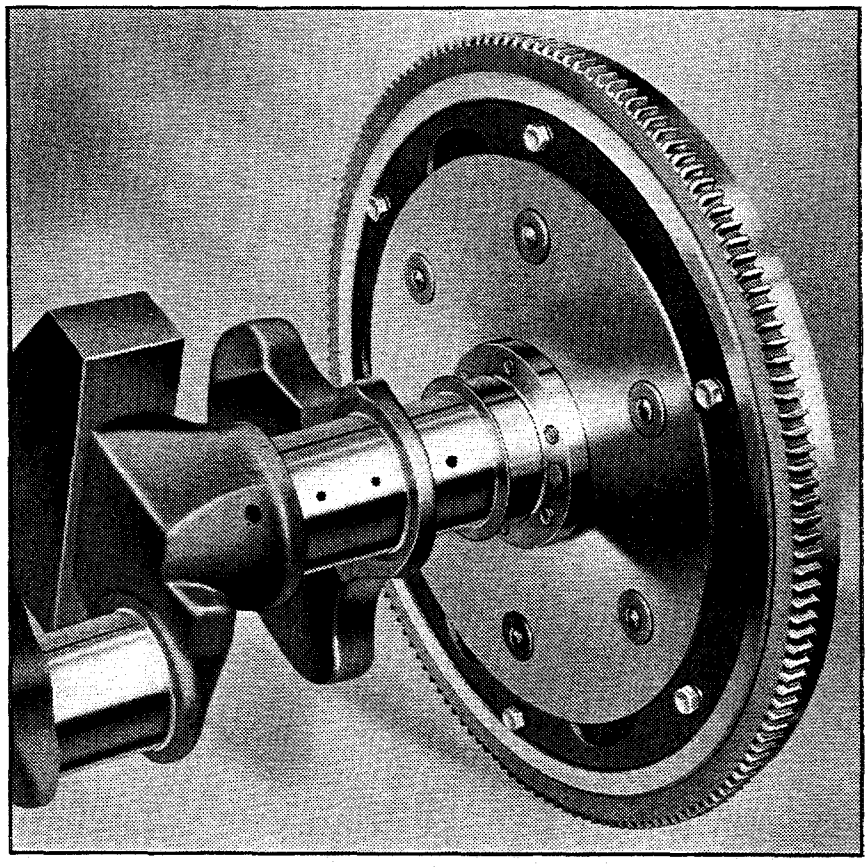

Syncro-Flex Flywheel

Use of a light flywheel in the LaSalle V-8 engine eliminates any development of vibration at high speeds.

The Syncro-Flex Flywheel, noteworthy Cadillac "First" of 1938, continues for all Cadillac V-8's. It imparts a degree of silky smoothness never previously achieved in engines of less than sixteen cylinders.

Instead of the usual rigid flywheel, the cast iron rim of the Syncro-Flex design is attached to the crankshaft by a flexible steel disc. Damping plates press against both sides of this flexible disc. When the engine is run at speeds at which certain crankshaft vibrations invariably occur, the flexibility of the disc permits the cast iron flywheel rim to run in a true circle regardless of crankshaft deflection. If the crankshaft deflects, however, the damping plates rub against the flexible disc, thus absorbing or damping the motion of the crankshaft just as the vibration of a violin string is damped if the finger is placed upon it.

All Cadillac V-8's also have a torsional vibration dampener on the crankshaft. While torsional or twisting vibrations are characteristic of crankshafts in all sixes, straight eights and V-12's, they are for all practical purposes eliminated by the short crankshaft of V-8 design engines. The dampener is used on Cadillac solely as an additional refinement to a more powerful engine.

Main Bearings

Due to the inherent cancellation of inertia forces in 90° V-type design, main bearings have no work to do other than support the crankshaft and absorb combustion forces. Hence, only three are necessary. These are rigidly backed and babbitt-lined. They have very wide surface areas which retain oil longer than seven or nine small bearings. Three bearings are more easily aligned and more easily accessible than are those in many straight-8's.

Valve Mechanism

All Cadillac-built engines are of L-head design. *All tappet bodies are now ferrox treated* to decrease any possibility of camshaft or tappet base scoring. Intake

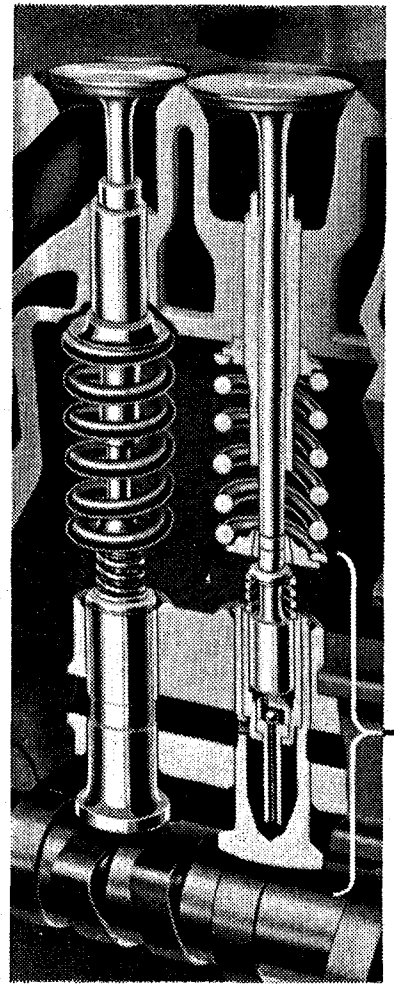

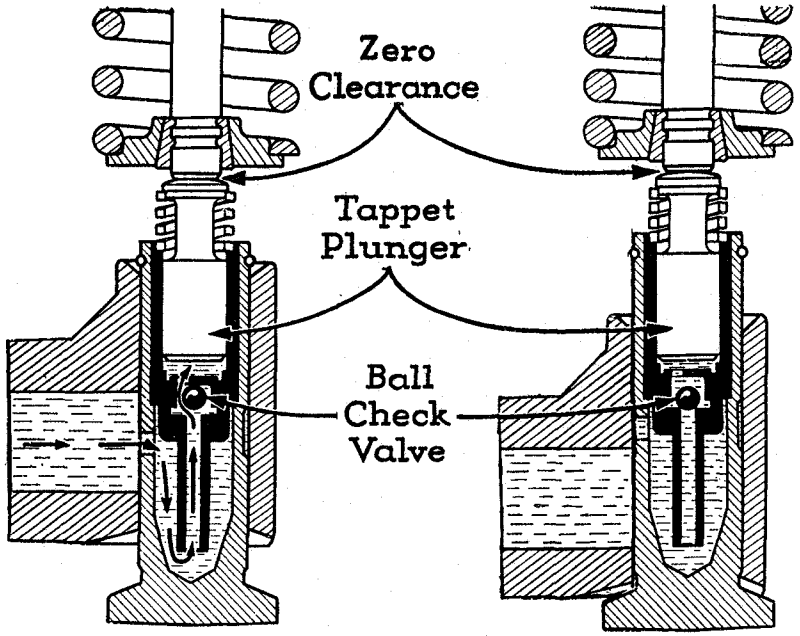

When the valve is closed oil is forced by the engine's lubricating system in around the ball check valve. This oil pressure holds the tappet firmly against the valve stem. Clearance is zero and the valve is in accurate adjustment.

When the valve opens the ball check valve prevents oil from escaping again insuring zero clearance. A controlled oil bleed around the tappet plunger compensates for valve expansion maintaining accurate adjustment.

HYDRAULIC VALVE SILENCER OPERATION

and exhaust valves are maintained in constant, accurate adjustment by hydraulic valve silencers or lash adjusters. These eliminate tappet noises frequent in all engines without automatic valve adjusters and particularly frequent in those of overhead valve design.

Service experience proves that 75 per cent of the cause for valve grinding is incorrect valve tappet clearance. This results in overheated valves and seats, causing leakage which decreases power output and increases fuel consumption. Valve silencers in all Cadillac-built engines eliminate this cause for service and operating expense by maintaining zero clearance under all conditions, thus prolonging valve life over other engines. With but one exception Cadillac and LaSalle are the only cars under $3,000 equipped with these owner-saving instruments.

These silencers are extremely costly instruments and have an accuracy of precision in manufacture equivalent to the world's finest and most expensive watches. Their operation is hydraulic, utilizing oil supplied under pressure by the engine's lubrication system. The silencers automatically keep all lost motion out of the complete valve mechanism under all conditions.

Valve seat inserts are unnecessary in Cadillac engines because of the especially hard cylinder block material. Inserts are required in other engines to resist the hammering action of valves in their seats when an inexpensive soft iron block material is used. Also, in the Cadillac design, heat from the valves escapes directly to the cooling water whereas valve seat inserts retard heat dissipation.

Cadillac not only uses quality block material of high heat dissipating characteristics, but also positively and forcefully cools valve seats by direct water flow. Through the use of hydraulic valve silencers, constantly

accurate valve adjustment is maintained which postpones the need for valve grinding far longer than the conventional valve mechanism with or without inserts.

Camshaft

The camshaft is a case-hardened steel forging driven by a silent chain from the crankshaft. Chain drive is far superior to any type or material of gears because it is stronger, quieter and greatly reduces wear. Hence, it is longer lived and more positive without servicing.

Camshafts are inherently balanced through Cadillac design. *Now* they are also *in balance during operation* by the use of counterweights. This is an additional factor in improved high speed smoothness.

Bearings are steel-backed for strength and are lubricated directly through passages in the crankcase. Only three are necessary because of compact V-type design.

FUEL SYSTEM

Fuel Pump

Fuel is fed through air-cooled lines along the frame side bars to the fuel pump located in front of the engine

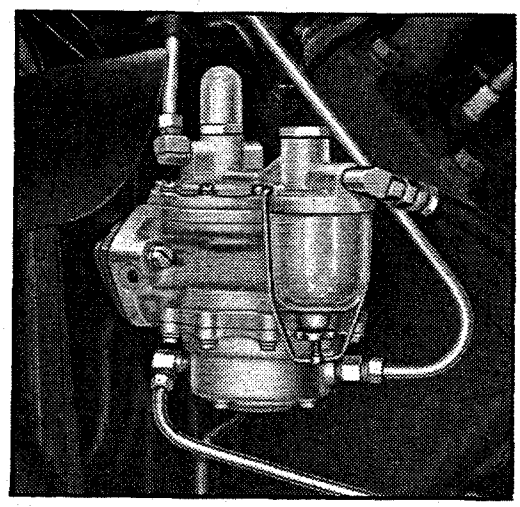

Fan-Cooled Fuel Pump

directly behind the fan. This is the coolest location under the hood, which eliminates vapor lock tendencies or

supply shut off due to engine heat. From the pump fuel is fed under pressure to the carburetor.

The pump is of silent diaphragm construction. Water and all impurities are filtered and deposited in a detachable glass bowl.

Gasoline tank capacity is 22 gallons for LaSalle, Cadillac "61" and Cadillac Sixty Special; 26.5 gallons for the Fleetwood V-8. These capacities afford an unusually wide cruising range for long distance touring. The *electric gasoline gauge* is *now operated by a gearless unit* which floats on the surface of the fuel. This prevents stickiness or irregularity of the gears formerly used.

Carburetors

Dual downdraft carburetors are used on all Cadillacs and LaSalle. They are ideally located above the center of the engine V for positive equal distribution of fuel mixture by the intake manifold. The carburetors are designed to eliminate the tendency of gasoline in the carburetor to boil when the warm engine is stopped. In conventional carburetors this boiling action creates gas bubbles which "percolate" upward through the fuel nozzle and discharge raw gasoline into the intake manifold which handicaps starting. Cadillac-LaSalle carburetors have a vent which permits any such gas bubbles to escape.

The nozzle design for the LaSalle carburetor provides an accurate calibration of fuel and air mixture for acceleration during part-throttle operation and likewise for fuel economy. An additional feature is an air-cooled metering jet which assists quick starting when the engine is hot.

The LaSalle carburetor also has Climatic Control. This is a perfected type of thermostatic choke which insures cold engine operation by continuing choking action until the engine has reached normal temperature.

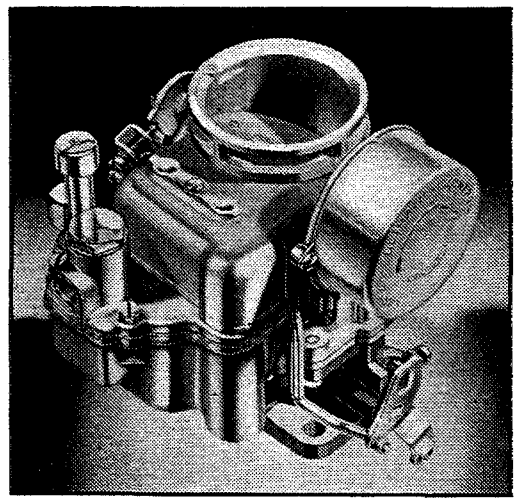

LaSalle Carburetor

A *new carburetor for all Cadillac V-8's* features simplification in design which greatly improves operating efficiency by reducing possibility of obstruction due to dirt or gum in the gasoline.

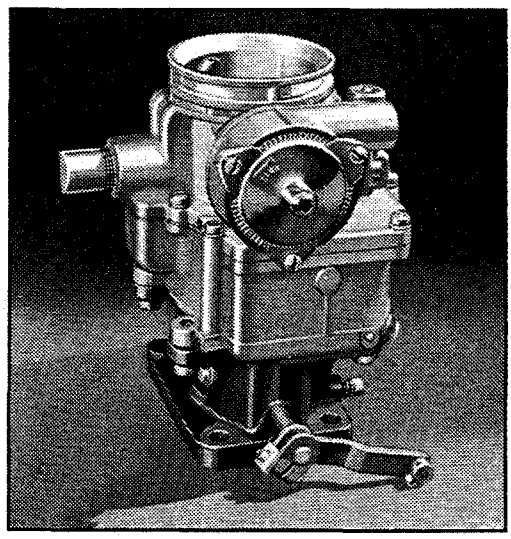

New Cadillac V-8 Carburetor

A *new choke* is used, actuated by exhaust manifold temperature. It is *simpler* and *more positive* in operation.

Another feature of efficient Cadillac carburetion is the concentric design of the fuel chamber. This design eliminates tendencies toward vapor lock, common to many

carburetors, by utilizing the cooling action caused by the evaporation of gasoline in the air stream passing down the carburetor throat. Fuel stored in the carburetor completely encircles the carburetor throat. By keeping this fuel constantly cool, rapid evaporation in the carburetor mixing chamber is avoided. Smoother, faster performance and more economical operation is attained in hot weather driving. The pronounced cooling effect resulting from evaporating gasoline may be easily demonstrated by placing a small amount of gasoline in the palm of the hand.

Air Intake

An oil bath air cleaner filters all air before it enters the carburetor, insuring a pure fuel mixture. This elimination of impurities in the air prevents scoring of piston and cylinder walls.

This type of cleaner is far more effective in handling large quantities of dirt than the conventional wire mesh type. Air rushing into the cleaner passes over a reservoir of oil creating an oil mist. Much of the dirt is held on the surface of the oil in the reservoir and the balance caught in a filtering element. All dirt adhering to the filter is washed into the reservoir by the oil mist. This keeps the filter clean and at maximum efficiency.

The air cleaner intake is at the forward part of the engine where it receives cool air directly from the fan. Cool air is heavier and has greater explosive qualities than hot, light air. The air intake is scientifically tuned to silence the sound of inrushing air to the carburetor.

Intake Manifold

Cadillac's uniquely designed intake manifolding insures equal fuel distribution to all cylinders. Two separate intake manifolds are cast into one unit. One manifold

feeds the four cylinders numbered evenly in the firing order, and the other supplies those with odd firing numbers. Since no two successively firing cylinders

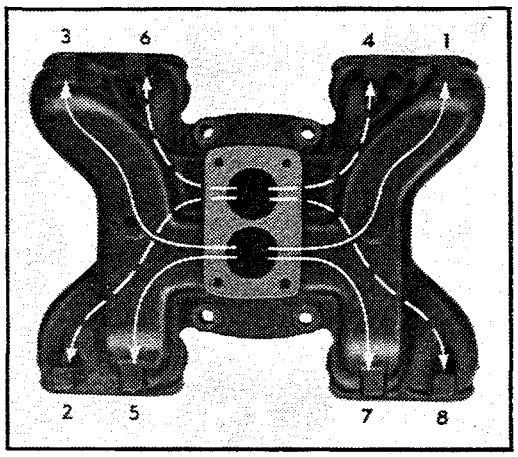

Equalized Manifolds

receive fuel from the same manifold, there is no chance of one cylinder starving another. Manifold distances from the centrally located carburetor are equal to all cylinders improving fuel distribution and reducing the possibility of condensation of gasoline in the manifold, such as occurs in the long straight eight manifolds.

A further precaution for complete vaporization and fullest possible use of fuel is the "hot plate economizer." Exhaust gases are led under the intake so that these hot gases are applied to the under side of the manifold. This direct heat immediately vaporizes any raw gasoline that may have dropped through to the manifold.

Exhaust Manifold

Each cylinder block has three exhaust ports. The end cylinders each have an individual port and the two center cylinders of each block are siamesed into a single port to supply heat to the hot plate in the intake manifold. Passages from the two center ports are so divided that part of the hot exhaust gases surge back and forth from block to block across the center of the

engine, thus heating the intake manifolds. The balance, with that from the end cylinders, goes immediately into the exhaust manifold.

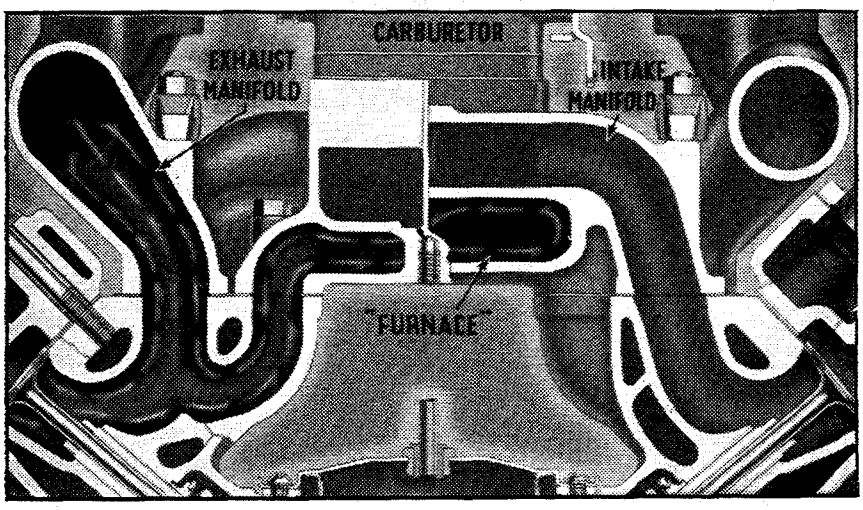

Cross Section of Intake and Exhaust Manifolds showing "Hot Plate Economizer"

The exhaust lead off is forward of the right hand cylinder block on LaSalle, "61" and Special engines. Exhaust piping system is on the right hand side of the chassis. On the Fleetwood V-8 the lead off is from the left side of the engine to accommodate the left side exhaust piping system on this model.

New Mufflers

New corrosion resisting three pass mufflers are used on all new Cadillacs and LaSalle. They are *much quieter* and *many times more durable* than conventional mufflers. The muffler on Cadillac "61" and LaSalle has a double wrapped outer shell of steel treated with a corrosion resisting material. The shell is approximately twice as thick as before. It is supported at each end by new rubber insulators. The tail pipe is supported by a fabric and rubber insulator. Muffler clamps are of improved design which gives a positive seal.

For the Sixty Special and Fleetwoods the new three pass muffler reduces back pressure by 40%, increasing

high speed power. Both members of the double muffler shell are of corrosion resisting material. In addition, corrosion resisting resonators are provided in the exhaust pipes to further insure quietness in these larger models.

New rubber and fabric supports insulate the Sixty Special muffler at both ends.

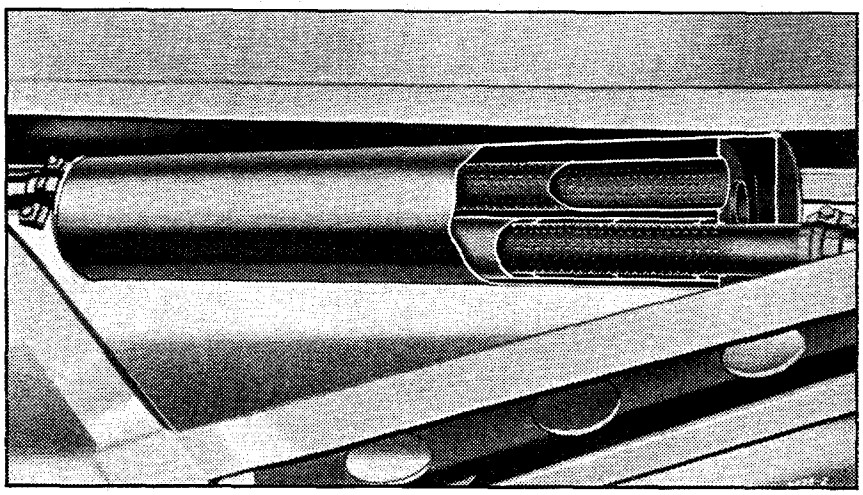

Cutaway View of New Corrosion Resisting Muffler

With the right hand exhaust piping system and transverse muffler on the Cadillac Sixty Special the exhaust tail pipe is at the left rear of the chassis. The exhaust piping system on the Fleetwood V-8 passes down the left side of the chassis and connects with the left side of the transverse muffler, hence the tail pipe is on the right. To keep heat away from the body interior, the pipe is outside the frame sidebar for much of its length.

ELECTRICAL SYSTEM

Peak Load Generators

A voltage regulated generator on LaSalle, Cadillac "61" and Sixty Special provides peak battery charge to cope with numerous electrical drains from accessories. This high capacity generator automatically alters its

output to suit the electrical load and battery condition, and the generator has greater capacity than most voltage regulated generators. With the battery at low state of charge and much electrical equipment in use, the generator will recharge the battery at the rate of about 26 amperes above a car speed of 20 miles per hour.

Peak Load Generator

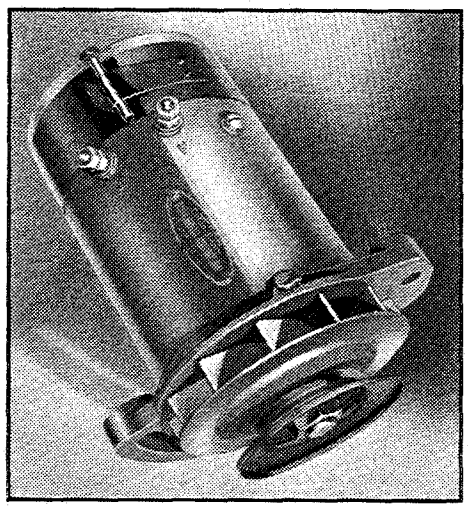

When the battery is fully charged and no accessories are in use, the generator automatically regulates the charge to a slow trickle to compensate for ignition drain. This keeps the battery at its peak load without danger of over-charging and insures longer battery life.

The Fleetwood V-8 has a Peak Load Generator which has both the ability to regulate voltage and control current throughout the speed range. *Output has been increased to 30 amperes.* The current control maintains this high output constantly at all speeds above 20 miles per hour if the battery is low and if a large number of electrical accessories are in use.

The generator on all models is accessibly located in the engine V directly behind the fan and is driven by a belt which also drives the water pump. It is air-cooled both as a result of its location and by its own fan built into the generator pulley which reduces its operating temperature and prolongs its life.

Solenoid Starter

The starter button on the instrument control panel engages the solenoid which acts as a magnet to cause a positive engagement of the starter pinion with the flywheel before the starter itself operates. This action relieves the starter gears of all shock loads and provides long life with quiet operation.

As a safety feature, starter engagement cannot be made unless the ignition switch is on.

Headlighting System

Cadillac was the first to develop the three-beam asymmetrical type of safe headlighting. Some makes of cars still retain the old-fashioned two-beam system.

Double filament bulbs are used which permit the right hand headlamp to throw its beams low and across the full width of the road and the left hand headlamp to illuminate the right hand road edge and ditch. This superior method of driving and passing beam design prevents glare to the oncoming driver yet assures adequate illumination.

The control switch is of the push-pull type and is located at the left of the instrument panel. It pulls out into three positions, the first of which is for parking. If the switch is in its second or center position, a foot button on the floor to the left of the clutch pedal permits the driver to switch his lights from City to Driving beam. If it is in the third or outermost position, the foot button will switch the lights from Driving to Passing. This four way use of the foot button is an additional and exclusive feature of Cadillacs and LaSalle.

A headlamp beam indicator immediately above the speedometer dial glows red when the Driving beam is in use. To meet legal requirements, both headlamps use 32-32 candlepower bulbs.

New Tail Lamps and License Plate Illuminator

On all new models the license plate is mounted in the center of the trunk or rear deck lid and is illuminated from below by a lamp integral with the trunk or deck lid handle. Combined stop lights and tail lamps are mounted on both sides of the car.

Circuit Breaker

A circuit breaker is used in the electrical system to prevent damage to the system from any current overload. Should this occur, the heat generated causes the unit to break the circuit. As soon as the temperature of the unit returns to normal the unit closes itself automatically. Fuses are eliminated.

Horns

New "Sea Shell" type horns are used on all Cadillac V-8's and LaSalle. These have short die cast bells and are mounted under the hood on the hood cross brace by laminated springs to prevent transmission of vibration to the body.

Ignition System

The ignition system is designed to provide an uninterrupted flow of current through simplicity of construction and thorough weatherproofing. The coil is completely enclosed and of the iron-clad type. A condenser is mounted inside the distributor to protect the contact points from burning and to assist in building up a high secondary voltage. The distributor and timer are mounted in one unit of a special waterproof design to protect the terminals from moisture. The distributor is driven directly from the camshaft.

Batteries

Batteries in all Cadillac V-8's are placed under the hood on the right side just in front of the dash and

below the starting motor. Improvements in style of hood side panels on the various Cadillac series make *all batteries much more accessible.*

The LaSalle battery is now located under the front floor on the left side.

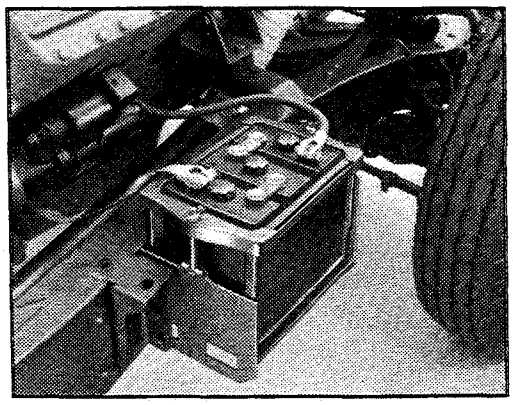

Cadillac Battery Location Illustrated on the "61" Chassis

A 17 plate battery of 112 ampere hour capacity is used on all Cadillac V-8's and LaSalle. Battery terminals are self-opening, reinforced by a steel insert which reduces corrosion and prevents breakage.

COOLING SYSTEM

Radiator Core

New, much more rugged radiators are used on all Cadillac V-8's and LaSalle. They are of tube and fin core construction, long recognized as exceptionally sturdy and capable of carrying very high internal pressures. Many other construction features such as reinforcing struts, double thick header and lock seams, increase sturdiness.

Under very severe tests the new radiators have proved to be *more nearly "leak proof"* than any radiator yet designed for pleasure cars.

Cores of all models are 3⅜ inches thick and have 9½ tubes per inch. Cooling efficiency is, therefore, extremely high. *With high internal pressures* the *boiling*

point of the cooling water has been *raised to 229 degrees* Fahrenheit at sea level, which greatly reduces evaporation and is of particular value in saving anti-freeze.

Radiator Shutters

Thermostatically controlled radiator shutters are used on all Cadillacs and LaSalle. They provide more nearly uniform underhood temperature, regardless of weather conditions for more efficient carburetion and economy than can be obtained with the conventional

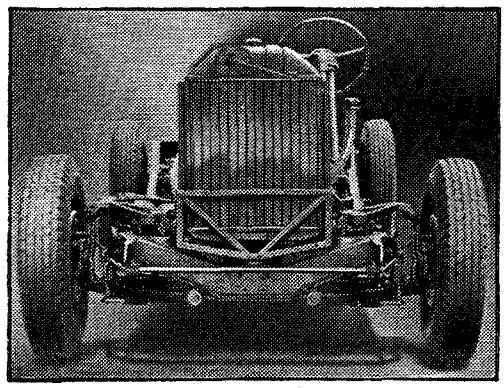

All series have radiator shutters. This costly and superior equipment is rarely used in the LaSalle class.

circulation type thermostat. With this latter type of control, water in the engine is maintained at a high temperature by circulation of the water through the engine alone, and not through the radiator. The flow of air through the radiator, however, is unrestricted. This wide variance between engine and underhood air temperatures is detrimental to carburetion, frequently causing carburetor frosting in winter and also causing condensation of moisture on the walls of the crankcase. Sludge forms from this condensation, dilutes engine oil and may score and wear vital engine parts.

Radiator shutters eliminate all of these inherent weaknesses of the circulation thermostat and aid the efficiency of Cadillac-LaSalle's new positive crankcase ventilating system.

Filler Cap

The radiator filler cap has a built-in pressure valve which reduces loss of water or anti-freeze caused by boiling. The boiling liquid cannot reach the radiator overflow pipe until it passes through the vent valve with a now *higher internal pressure of five and one-half pounds per square inch*. Hence, the temperature at which the liquid may boil off is higher than its normal boiling point. Boiling-over action is thus forestalled completely or delayed.

The filler cap has a bayonet type fastener which eliminates danger of pressure overflow when the cap is removed. Before the cap can be completely turned to removal position, any pressure built up from overheating is allowed to escape automatically through a vent without danger of injury to the operator.

Fan

The LaSalle, "61" and Special fans have four, and the larger Fleetwood fans, six blades. They rotate on a permanently sealed double row ball bearing which never requires lubrication. A single pulley and belt drive the fan only, the water pump and generator being driven by a second belt and pulley. This arrangement increases belt life and, in event of breakage, throws only one of the engine cooling units out of operation.

Water Pump

The impeller type water pump is easily accessible by being built into the front of the right hand cylinder block. An automatic packing adjustment is provided whereby the packing is held by a regulating spring and the hydraulic pressure of the lubricating grease. This prevents leakage from faulty packing adjustment and eliminates service expense.

Water Circulating System

Cadillac V-type design lends itself to more simple, uniform cooling than is possible in straight eight engines due to their much longer cylinder blocks.

Water is drawn through a short hose connection from the bottom of the radiator tank to the pump. From here it is forced under high pressure directly into the right hand cylinder block. Half of the water passes through the right hand block, then upward to the cylinder head. The other half is forced through a center passage in the engine to the left hand block. This simplified system requires only three short hose connections.

Water pressure, provided by the size and location of holes in the cylinder block, directly cools valve seats.

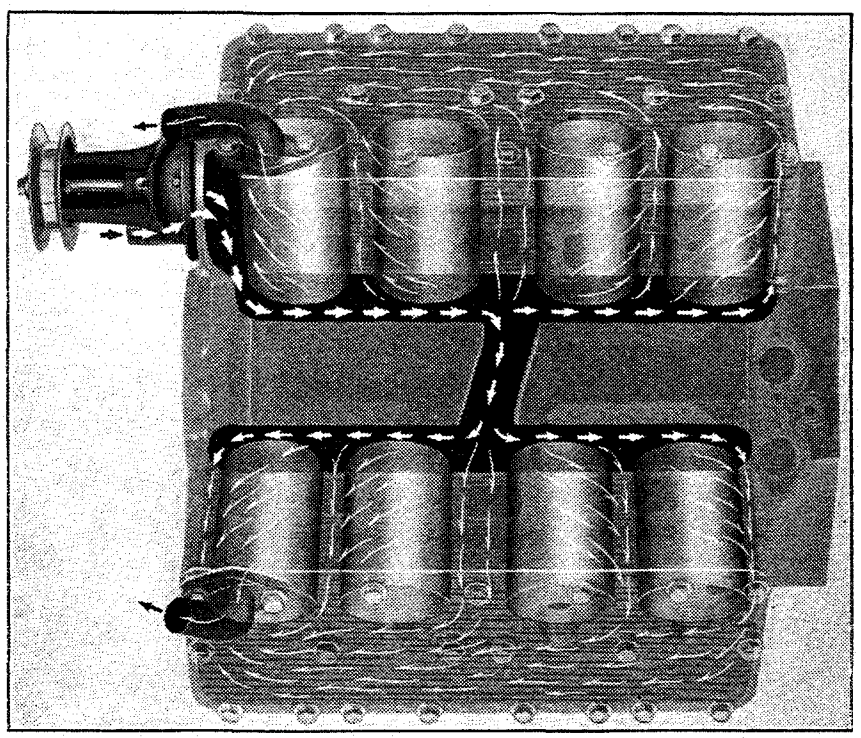

Complete and Uniform Water Circulating System

Additional piping, common in other engines, is eliminated. Because the Cadillac-designed cooling system promotes thorough cooling of valve seats, valve seat inserts are unnecessary.

Full Length Water Jackets

Full length water jackets provide uniform cooling over the entire length of the cylinder walls and, therefore, insure an equal expansion of the cylinder barrels in all directions under severe weather conditions. Cylinders remain true and full compression is retained after years of hard usage.

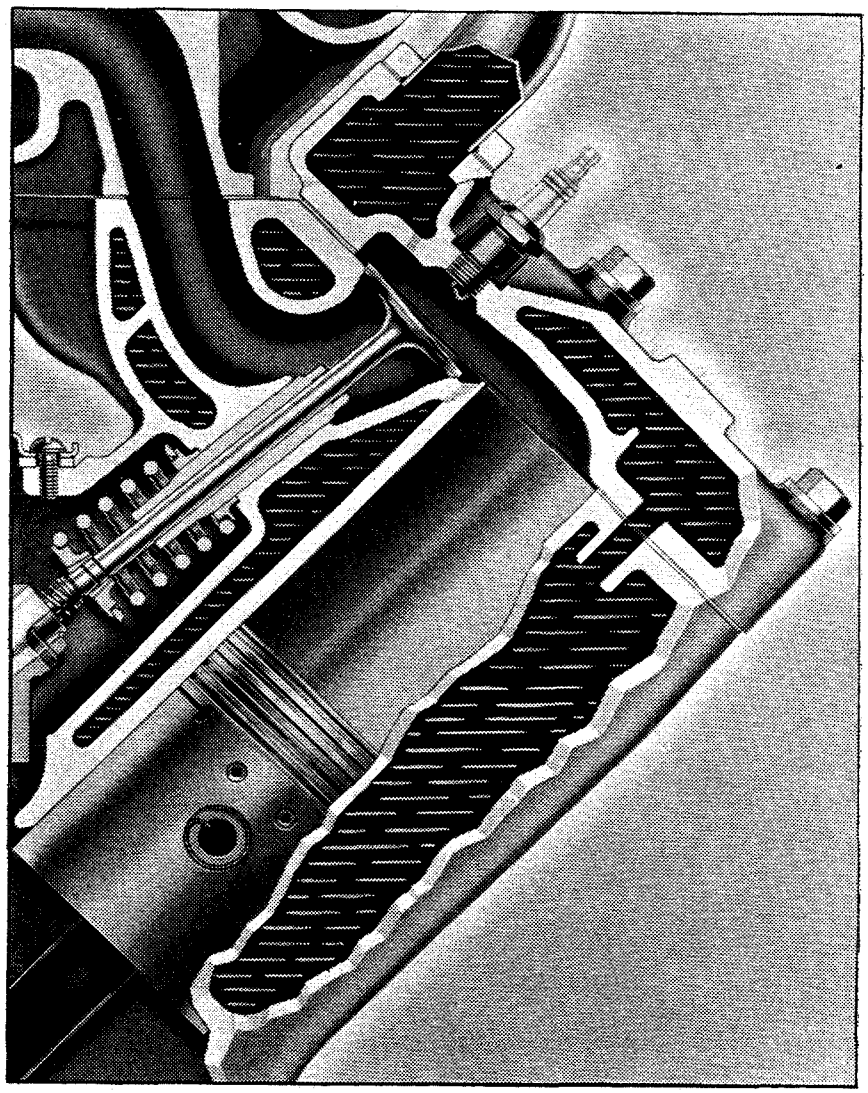

Full Length Water Jackets

A second important advantage of full length water jackets is the reduction in engine oil temperature as a result of the engine's cooler operation. Lubrication qualities of the oil are retained much longer.

LUBRICATION SYSTEM

Engine Lubrication

Full pressure lubrication provides oil positively to every moving part of the engine, including wrist pins. Oil is in sufficient quantity to be of material assistance in cooling bearings and prolonging their life. Oil travels through smooth drilled passages in the crankcase eliminating the conventional oil lines which might become broken. The only piping in the entire engine is to the hydraulic valve silencers and to the oil pressure gauge on the instrument panel.

Oil Pump and Intake

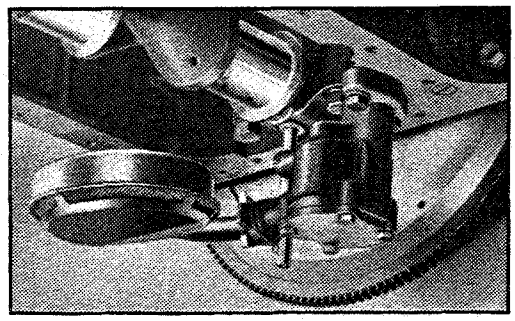

A large gear type pump is located at the rear of the engine and to the left of the rear main bearing. Oil is taken into the pump through a screened float intake which is shaped like an inverted cup open at the bottom. This intake floats on the surface and draws only the clean oil. As the oil level rises and falls, the float moves up and down with it. The opening is so large that even though the oil is thick and cold it is drawn into the pump.

A regulator built into the body of the pump maintains correct pressure. From the pump, oil is delivered first to the three main bearings and the three camshaft bearings. From the rear camshaft bearing, oil continues upward to the bearing supporting the distributor and oil pump drive shaft. An oil passage from the front

camshaft bearing likewise carries oil to the timing chain. Oil is conducted from the center camshaft bearing to the hydraulic valve silencers, and thence to the cam and valve followers.

Oil passages are drilled in the crankshaft leading oil from each of the main bearings to the adjacent crankpins. Part of this oil lubricates the connecting rod bearings, part flows up the rifle drilled connecting rods to the wrist pins and part is forced through small holes in the connecting rod big ends for cross lubrication of the cylinder bores.

Crankcases in V-type design engines are much shorter than those of straight 8 engines. *For 1939* the *Cadillac-LaSalle oil pans are shorter and deeper than* before, further reducing the effect of steep grades or rapid deceleration on engine lubrication.

Improved Crankcase Ventilation

A new velocity suction crankcase ventilating system has been designed for all V-8 engines. It is *much simpler*

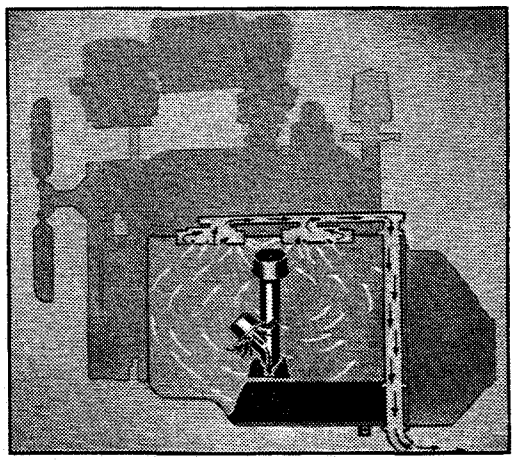

New Crankcase Ventilation System

and more positive at all speeds than the former engine suction method. In addition to being more efficient than road draft types now in use, its high efficiency

is maintained throughout the life of the car. The new design is compact. The usual unsightly road draft pipes are within the engine. Air enters the oil filler pipe through its air cleaner as before and thoroughly ventilates the crankcase. Damaging unburned fuel vapors and moisture, which would otherwise collect in the crankcase, score cylinder walls and bearing surfaces, and dilute lubricating quality of the oil, are positively sucked out at all car speeds.

Air, carrying the vapors with it, then passes upward into the valve tappet compartments and is led rearwardly into a passageway cored behind the engine rear bulkhead and ahead of the flywheel. This passageway leads downward to the bottom of the engine to which is secured an outlet fitting discharging the gases beneath the car.

IMPROVED CLUTCH

The semi-centrifugal single dry plate clutch for all V-8's has many new design refinements which give *smoother engagement and better balance.*

A new clutch driven disc has been developed for both LaSalle and all Cadillac V-8's which has, instead of one waved metal ring, a number of segments. Each of these segments is waved to act as a cushion for smoother engagement and more uniform contact.

For all Cadillac V-8 clutches three spring steel strap, positively locate the pressure plate on the driving plates maintain accurate clutch balance and further contribute to greater smoothness.

Light pedal pressure is achieved by the design and placement of three small centrifugal weights. These increase the clutch spring pressure as the car speed increases to take care of the increasing engine torque,

yet permit the clutch to be held easily disengaged at low speeds. Eight coil spring vibration dampeners built into the hub insulate the drive line from engine pulsations.

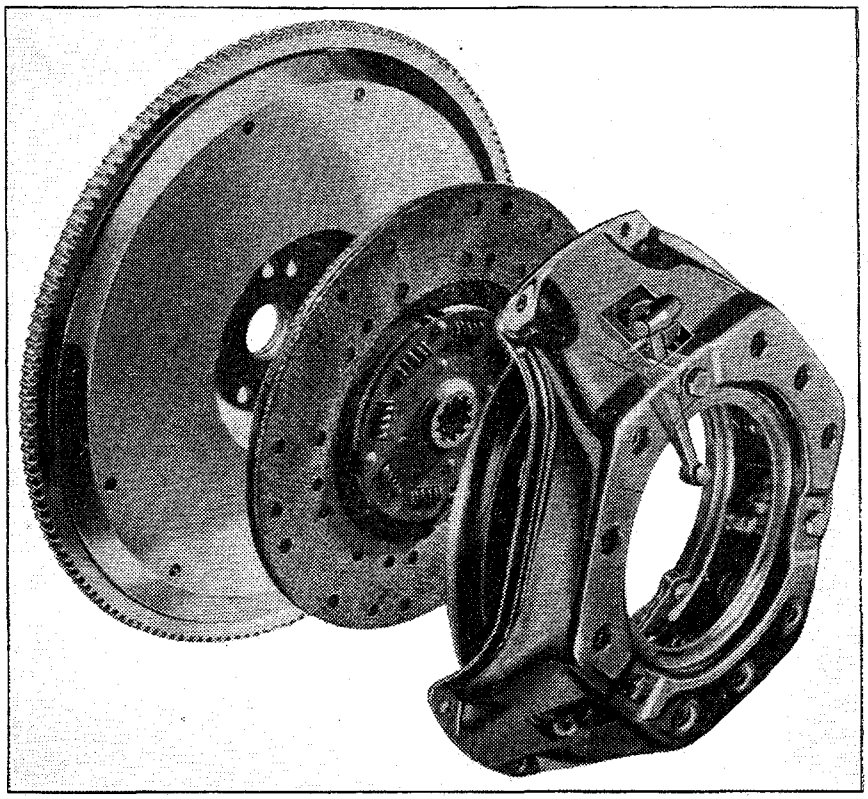

Improved Semi-Centrifugal Clutch for LaSalle

The clutch throwout bearing has a sealed-in lubricant which need not require attention for the life of the car although a lubricating inlet is provided as an additional margin of safety in event of extremely severe usage.

Woven facings and extremely rigid cover plates promote long life.

SYNCROMATIC GEARSHIFT

Public acceptance of Syncromatic Gearshift is proved by its adoption by many other cars in 1939. Cadillac's exclusive design is continued and refined for *even much easier shifting* than last year.

The shifting lever travel between second and high gear positions has been reduced from 8 to 6 inches. The neutral position has been lowered by one inch. Also, the bracket which supports the transmission control

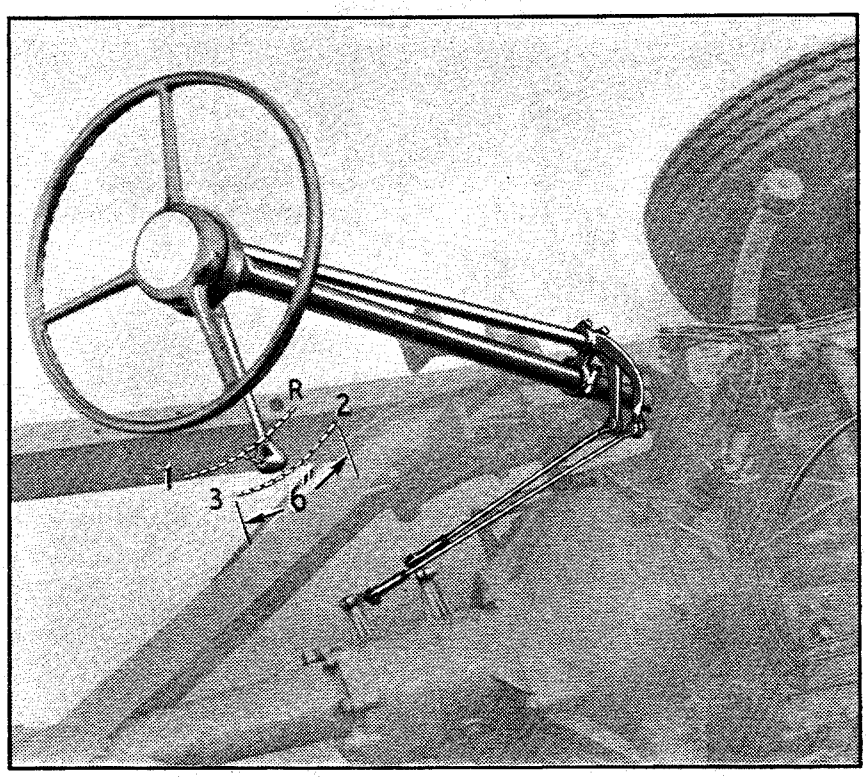

Syncromatic Shift Control

shafts at the bottom of the transmission column has been redesigned. The bracket is placed between the two shafts which reduces the number of points where friction might occur, thus improving smooth operation.

The five important features of the Cadillac-LaSalle Syncromatic Gearshift are:

1. **Nothing new to learn.** Gear shifting is accomplished in the conventional manner, only more quickly and more easily.
2. **Greater roominess.** With the front floor entirely clear the front seat now accommodates three persons comfortably with legroom to spare.

3. **Ease of entrance.** The driver slips behind the wheel easily through either front door.

4. **Quietness.** Through elimination of the conventional lever, which has a direct connection from the chassis, telephoning of road and engine noise into the car is prevented.

5. **Standard equipment.** There is no extra charge for Syncromatic Gearshift on any Cadillac or LaSalle.

The short shifting lever projects to the right below the steering wheel hub, the ball end being convenient to the driver's right hand. The movement of the shifting lever actuates either of two shafts which extend down and nearly parallel to the steering column. One shaft operates for low and reverse gears, the other for second and high. These shafts are inconspicuously colored to match the column itself. Each shaft operates a short shifter rod which passes into the transmission case.

SMOOTHER SYNCRO-MESH TRANSMISSION

The Cadillac-LaSalle Syncro-Mesh transmission is built to the highest standards of precision known to the industry. It is many times more durable than any other transmission known to Cadillac engineers.

Much easier, smoother shifting is also provided in all new Cadillacs and LaSalle *by a refinement in the transmission itself. A new transmission interlock* positively prevents engagement of more than one gear at a time even under abnormal conditions such as the extreme shock of collisions. This device is within the transmission case and operates between cam surfaces integral with the two shifter shaft hubs.

Furthermore, because the interlock is positive, it permits softening of the ball detent springs and less effort is required to lift the detent balls. This greatly increases shifting ease and smoothness.

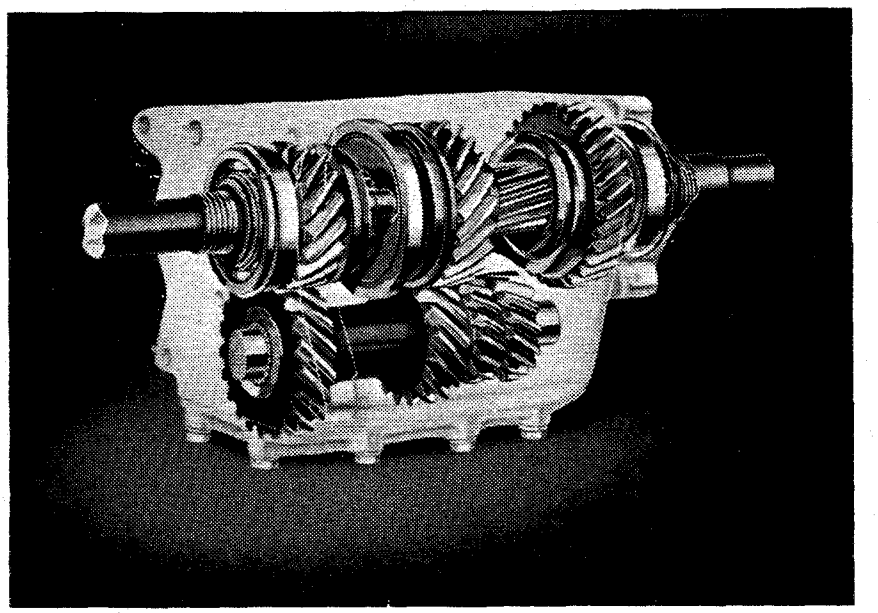

Improved Syncro-Mesh Transmission

The pin type synchronizer is continued with minor improvements which also increase shifting smoothness. This is the most effective design yet developed for matching gears before actual engagement takes place because it is not effected by weather or climatic conditions. Fast, clashless shifting may be made at all times.

All transmission gears, including reverse, are helically cut for silent operation and then finished with an expensive lapping process. All gears are carefully checked individually and then matched into sets by hand. The expert hand, eye and ear of long trained craftsmen check for perfect running quietness in a soundproof room.

The low and reverse gears are of the sliding type mounted on helical splines. Second speed gears are in

constant mesh for silence. There are no shifter shafts since Syncromatic Gearshift operates through levers. Friction is thereby greatly reduced and shifting is much easier. On the bottom of the transmission housing is a removable plate for service accessibility.

The pin type synchronizer, which made shifting so easy and clashless last year, is continued. This is the most effective type of synchronizer in use because it is uninfluenced by weather conditions.

Overdrives, fourth speed gears or other automatic gearing devices, used on some cars, are necessary with small engines to improve economy and life. The extra cost owners must pay for these devices more than offsets any small improvement in operating economy claimed for them.

Cadillac, however, prefers to use large engines sufficiently powerful to pull the car under all conditions, and runs these engines slowly by means of low standard rear axle ratios. Performance, as well as long life and economy, is therefore secured. Transmission complexity is avoided.

FOUR V-8 CHASSIS FOR 1939

The outstanding sales appeal of all new Cadillacs and LaSalle is the *Controlled-Action* Ride. It is second in importance for all 1939 models only to the Cadillac-built V-8 engine. Controlled-Action Ride is another Cadillac "First." *Now for the first time, both a soft, smooth ride and car controllability at all speeds are obtained.*

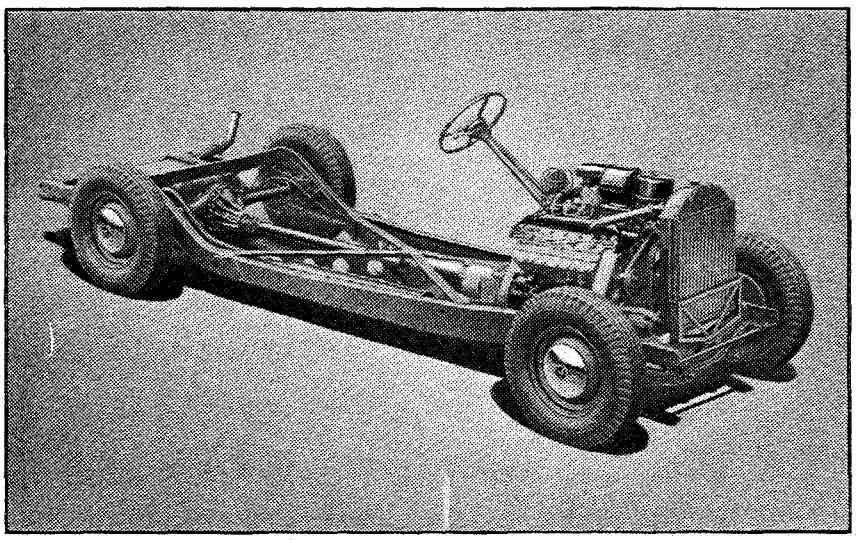

New LaSalle V-8 Chassis

LaSalle and Cadillac "61" have a new rear suspension embracing the new Hi-Plane Hotchkiss Drive which consists of a new relationship between the rear axle and the angle and height of the rear springs; new springs with wax impregnated liners; new tension shackles; and new lifetime rubber spring bushings.

Other important chassis improvements in these two models have been made in front and rear suspension, in steering and in the rear axle which provide even greater *handling ease, simplify servicing, reduce maintenance expense and give longer car life.*

The Sixty Special chassis and the Fleetwood V-8 chassis have several refinements. Most noteworthy is an improvement in the rear axle which even further

increases durability and reduces maintenance expense. The Fleetwood V-8 also has new rear shock absorbers of costly design, increasing the luxurious comfort of this model.

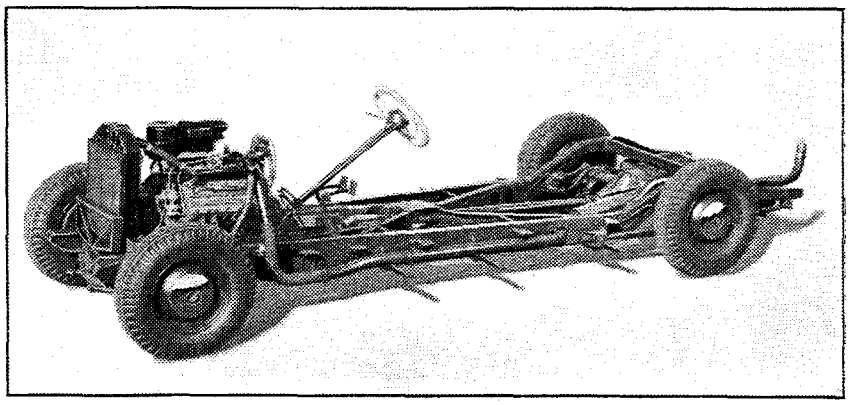

New Fleetwood V-8 Chassis

Four wheelbase lengths are required for the four chassis. Despite increased overall length and greater interior roominess the LaSalle wheelbase is now 120 inches. This promotes greater maneuverability and ease of parking.

For the new Cadillac "61" wheelbase has been increased to 126 inches which contributes to its new long, low appearance. The Sixty Special continues at 127 inch wheelbase; the Fleetwoods at 141 inches.

CADILLAC-LASALLE CONTROLLED ACTION RIDE

The Greatest Advancement in Riding Comfort Since Knee Action

Cadillac has always been recognized as the world-famous authority on motor car riding comfort. Back in 1914 when the first Cadillac V-8 was introduced people aspired to Cadillac ownership because of their "luxurious comfort." In the intervening years Cadillac

has made amazing strides in the perfection of this feature. Cadillac has maintained its leadership through constant research and development so that today people still look to Cadillac for the ultimate in riding comfort.

The incomparable Cadillac *Controlled-Action* Ride of 1939 had its experimental origin several years ago when Cadillac engaged Mr. Maurice Olley, long associated with the eminent fine car builder, Rolls Royce, Ltd., and internationally known for his progressive developments in motor car comfort. It was Mr. Olley's conviction that true riding comfort could only result from a scientific approach to the problems of front and rear suspensions. To these two problems and their inherent relationship, Cadillac has devoted many years and considerable expense in experimentation, testing and development.

Research was begun by analyzing all of the effects to the car body and its passengers as the wheels passed over irregularities in various road surfaces. Every known type of suspension for both front and rear of the chassis was thoroughly investigated. First result of this research program was the development of Knee Action. This extraordinary improvement in riding comfort was first developed and introduced by Cadillac in 1934 and while other manufacturers have since attempted to copy the Knee Action principle, Cadillac has always remained in the lead because of its intensive research for constant perfection of this feature in every new model.

Riding comfort studies by Cadillac, however, did not stop with Knee Action. The rear suspension system was investigated also and found to be poorly coordinated. The reason for this was and still is that in all other types of rear suspension the engineer has always had to compromise between riding comfort and controllability. In 1939 several cars will be equipped with

various types of softer rear suspensions. The Cadillac-LaSalle *Controlled-Action* design is the first, however, to combine a smoother ride with greater car controllability and roadability. Also, in conventional designs, the rear suspension which is best for roadability is inclined to produce axle "hopping" and consequent body shake. This, too, is eliminated in *Controlled-Action* Ride.

As in the development of Knee Action, Cadillac engineers decided upon a scientific approach to a *fundamentally correct rear suspension geometry*. The attainment of this objective is, in brief, the basis for the incomparable *Controlled-Action Ride* for 1939.

Since the new Cadillac-LaSalle models fall into three relative classifications of size and weight, three methods of attaining *Controlled-Action* Ride are employed.

For the LaSalle and Cadillac "61" the new Hi-Plane Hotchkiss Drive, an entirely new rear suspension, has been developed. The end-to-end type shock absorbers are the only unchanged parts.

The Cadillac Sixty Special represents a totally different approach to the overall design of a motor car and its entire chassis is unique to itself. Many design features account for the Special's smooth ride and remarkable roadability such as a low amount of unsprung weight (car weight not supported by the springs), redistribution of the car weight and relationship of spring stiffness between the Knee Action coils and the rear springs. The Special has served as a guide in the development of *Controlled-Action* Ride for LaSalle and Cadillac "61."

In the larger Cadillac Fleetwoods, weight in itself has always been an important factor in their luxurious comfort. Refinements in Knee Action, rear springing, improvements in their wax liners, cross link rear stabilizer and new, softer action shock absorbers have all contributed to heightening the Fleetwood reputation of being the world's finest riding cars.

LaSalle and Cadillac "61"
Hi-Plane Hotchkiss Drive

Since the wheels of every car are suspended on the rear axle, the axle must move up and down with the wheels as they roll over irregularities, holes and bumps on various road surfaces. If one wheel is lifted higher than the other the axle will pivot or rotate about some center point. In conventional suspensions used today this point is below the axle weight center as shown below:

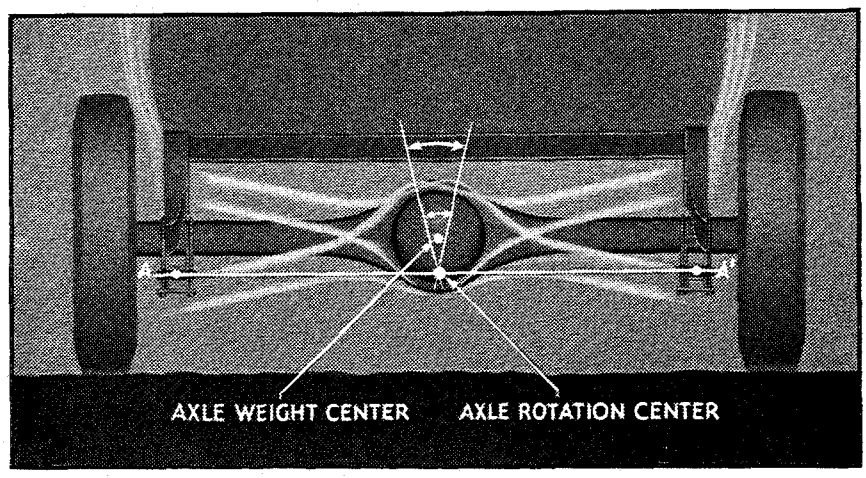

The axle rotation center is below the axle weight center in all conventional rear suspensions.

The reason for this is that the rear axle always rotates about a point in the same plane as the plane of action of the rear springs. Assume that a line were drawn between the two points of spring attachment to the frame and to the shackle and a similar line drawn through the points of attachment of the opposite spring. A third line (A-A′) intersecting these two spring lines represents a plane known as "the plane of action of the rear springs." Thus, as the wheels rise and fall over road irregularities the axle rotates about a center point directly below the axle weight center and in this plane of spring action. Because this center point of axle rotation is below the axle weight center in all conventional cars the axle as it rotates moves from side to

side and carries the body with it. This produces body side shake. In other words, in all other suspensions so far designed the springs cannot entirely control axle action.

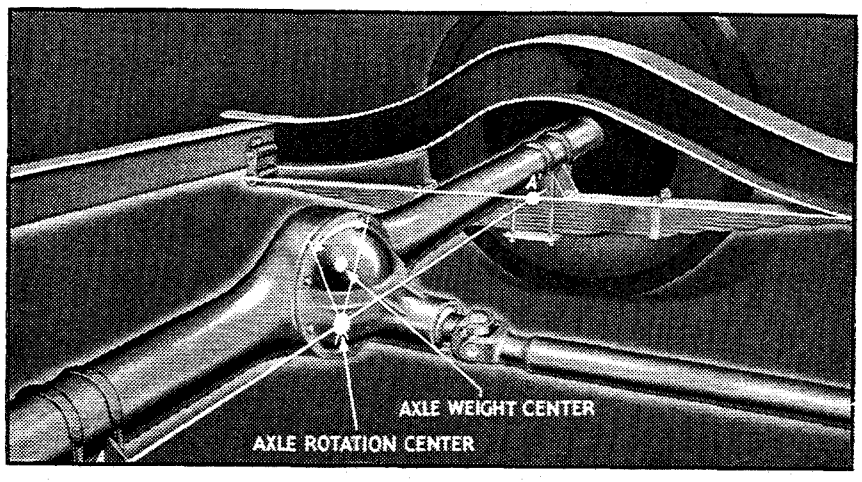

View from above: Conventional Rear Suspension

Also when very rapid axle and spring action take place, tire and spring action builds up to the point where it accentuates axle rotation to a great degree. Typical axle "hopping" takes place, i.e. axle vibrations which are self-perpetuating long after the original cause

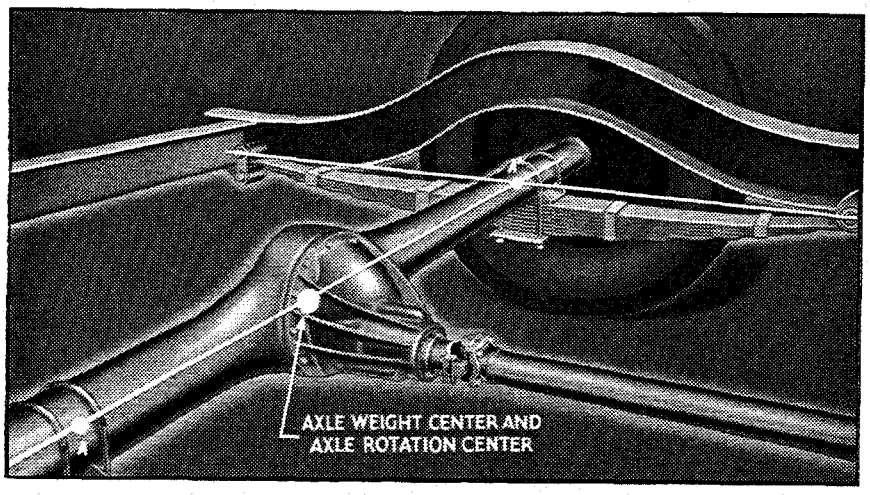

Cadillac-LaSalle Hi-Plane Hotchkiss Drive

for them is no longer present. Axle hopping is most detrimental to riding comfort, to controllability and also to safety because it adversely affects the steering stability of the car.

In the new Hi-Plane Hotchkiss Drive on the Cadillac "61" and LaSalle the plane of action of the rear springs (A-A′) is higher than it is in the conventional system described above because the spring attachments to the

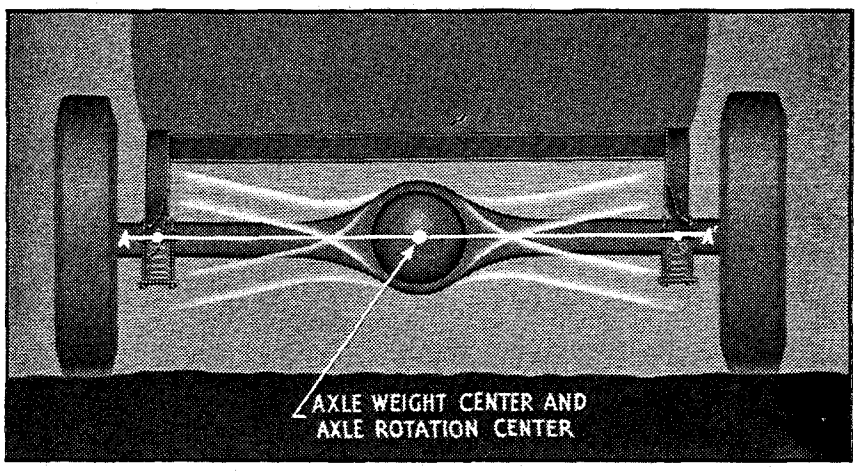

In the new rear suspension, the axle weight center and the axle rotation center coincide

frame have been raised. This "plane of spring action" passes through the axle weight center. Since the axle rotates about a point in this plane, the axle actually rotates about its own weight center. There can be no axle side movement. Consequently, the tendency toward body shake is greatly minimized. *The springs have positive control over axle action at all times.* Furthermore, there is no tendency toward building up periodic axle "hopping." *Axle vibrations which produce body shake and adversely affect roadability and steering controllability are absent.* A cross link rear stabilizer is, therefore, both unnecessary and undesirable. LaSalle and Cadillac "61" are now the safest and most comfortable cars of their size on the road today.

Hotchkiss Drive

Hotchkiss Drive is a principle of rear suspension design which allows the rear wheels to follow road irregularities freely. Starting and stopping strains are cushioned

by the rear springs and smooth rear axle action over rough roads is attained. Unsprung weight is reduced to a minimum.

The torque tube or torque arm drive used on some cars aggravates harsh riding because rear wheels are held rigidly to the drive line. This construction ties the whole rear axle, rear wheels and propeller shaft assembly to the transmission and engine. Coil type rear springs are used to soften the harshness of the conventional torque tube or torque arm ride by reducing the amount of unsprung weight. All Cadillacs and LaSalle still have less unsprung weight than the torque tube or torque arm design with coil springs.

Coil type rear springs can *only* be used with torque tube or torque arm rear suspension.

The new Controlled-Action Ride for 1939 could be obtained only by Hotchkiss Drive. The extraordinary comfort and controllability of the new Cadillacs and LaSalle is a tribute to the adaptability of this type of drive. For example, Hotchkiss Drive makes the Cadillac "61" and LaSalle *Controlled-Action* Ride possible in the following ways:

Advantages of Hotchkiss Drive

Perfected Rear Suspension Geometry avoids the necessity of compromising between comfort and controllability. Now both are realized.

Friction is most desirable to control rear axle weight. The waxed liners between the leaves of the rear springs provide a simple and positive method of maintaining accurately the desired control. Leaf springs with waxed liners are only adaptable to Hotchkiss Drive.

Insulation against Noise and Shock. With Torque Tube or Torque Arm Drive the rear axle is attached to the chassis frame by rigid structural members

which may telephone noise or shock into the body. With Hotchkiss Drive the axle is attached by the rear springs. The springs themselves are effective insulators against noise and shock. They are aided by rubber pads separating the rear axle from the rear springs. Also, the springs themselves are completely insulated from the chassis by rubber bushings at all points.

Engine Smoothness. With the Hotchkiss principle, driving and braking forces are conducted between the rear axle and frame by the springs. The engine is not involved as it is with torque tube drive. Hence, the rubber engine supports do not have to absorb these forces and can be entirely suited to their primary purpose of insulating the engine.

With a variable rear spring rate Cadillac and LaSalle ride smoothly and quietly over bumps. With the conventional system the body may strike through onto the rear axle.

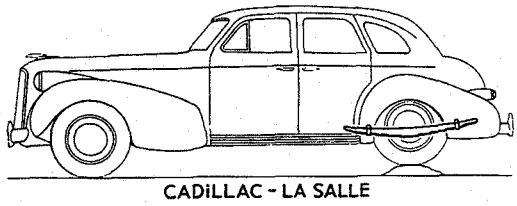

CADILLAC - LA SALLE

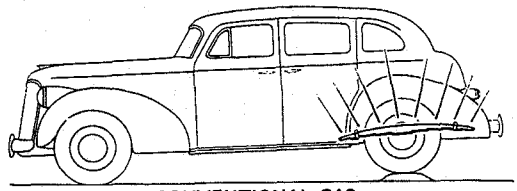

CONVENTIONAL CAR

Variable Spring Rate. New tension shackles provide increased spring stiffness when the springs are deflected over road irregularities. The springs themselves, therefore, have a variable rate of deflection when they are compressed. As the wheels roll over road inequalities the springs deflect a certain amount with one person riding in the car, an additional but smaller amount with two persons and a still smaller additional amount with three persons. With ordinary springs, (coil or leaf type) and shackles, spring deflection increases an equal amount with each addi-

tional passenger and may allow the body to strike through onto the springs or bumps. A variable spring rate avoids such shock. It is only available with Hotchkiss Drive and, in the new Cadillac "61" and LaSalle, by the exclusive design of their tension shackles.

Rear Springs and Shackles

Semi-elliptic rear springs on all Cadillacs and LaSalle have wax impregnated liners between the leaves. This feature contributes importantly to the new *Controlled-Action Ride* because the friction of the springs is controlled exactly by the amount of liner material. Waxed liners are the only means yet devised which enable the engineer to control spring action accurately.

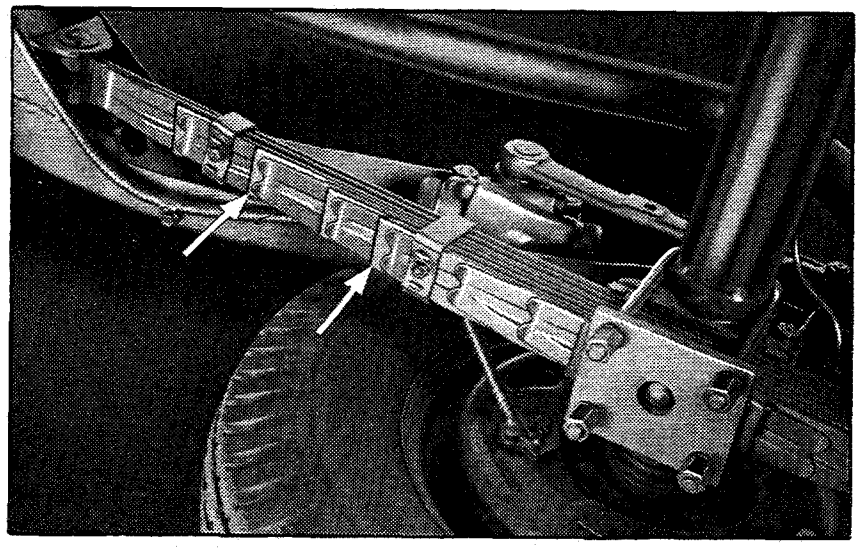

Rear Spring with Wax Liners

In addition to friction control the liners eliminate squeaks and never require lubrication. Rear springs with waxed liners are *exclusive* to all Cadillacs and LaSalle.

With the new Hi-Plane Hotchkiss Drive design LaSalle and Cadillac "61" springs are now mounted inside the frame side bars. They are attached by tension

shackles and Berlin spring eyes. The shackles have rubber bushings, top and bottom. Rubber is also used at the front spring eyes. The *rubber reduces road shock* and *noise is conspicuously absent* in these new models. Rubber bushings also reduce service expense because they *last* the life of the car and *never require lubrication.*

The *new tension shackles* increase spring stiffness when the springs are deflected more than their normal amount. They *reduce the possibility of the body from striking through onto the springs on severe bumps.* Berlin spring eyes improve rear suspension geometry and are stronger, better resisting distortion when subjected to abnormal strains.

The Sixty Special and Fleetwood V-8 springs are rigidly attached to the frame by double bar-type shackles which employ rubber bushings at the top and threaded bearings below. Their front Berlin spring eyes are also encased in lifetime rubber bushings.

Shock Absorbers

All Cadillacs and LaSalle employ double acting hydraulic shock absorbers of the end-to-end discharge type.

The front shock absorbers are attached to the upper arms of the Knee Action system, and the rear shock absorbers to the rear spring pads. End-to-end shock absorbers have more power to control both compression and rebound actions of the springing system. Also, their characteristics may be more accurately determined by Cadillac engineers to achieve the best riding results. For these reasons Cadillac-LaSalle end-to-end type shock absorbers are superior to all other types and are best suited to the new Hi-Plane Hotchkiss Drive.

The shock absorbers on the Fleetwood V-8 chassis have a three-way manual adjustment which permits a

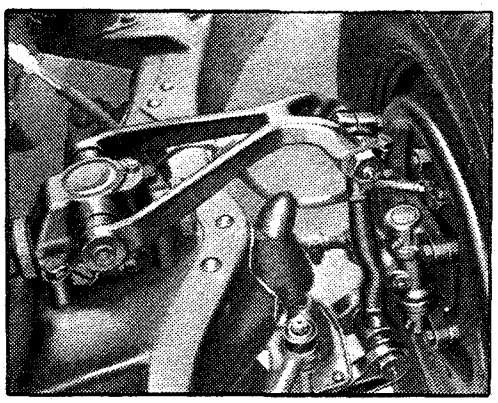

End-to-End Type Shock Absorbers on LaSalle and "61"

variation of setting to give a soft, medium or firm ride best suited to the owner's requirements. The valving

Fleetwood Shock Absorber with Manual Adjustment

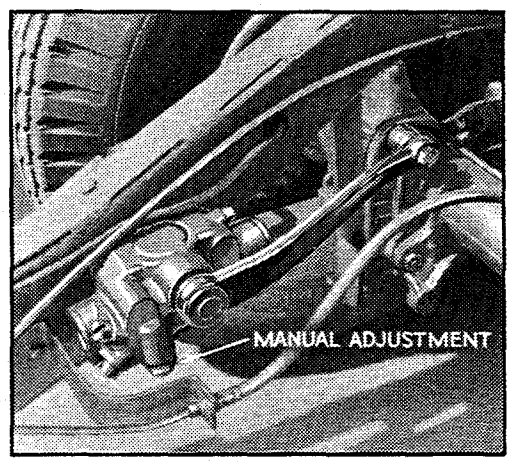

on these shock absorbers, both front and rear, has been improved, resulting in an even *softer, smoother Fleetwood ride* than before.

Ride Stabilizers

The front stabilizer is of the torsion or spring bar type. It is mounted in front of the frame cross member on LaSalle, "61" and Special, and behind the cross member of the Fleetwood V-8. The operating levers formed at the ends of the shaft are linked to the spring cups while the shaft itself is bracketed to the frame side members. The shaft is of one piece unit con-

struction for strength and rigidity. The importance of the design is that as one side of the car attempts to rise farther than the other, the stabilizer resists with a twisting action, holding the car on an even keel. This

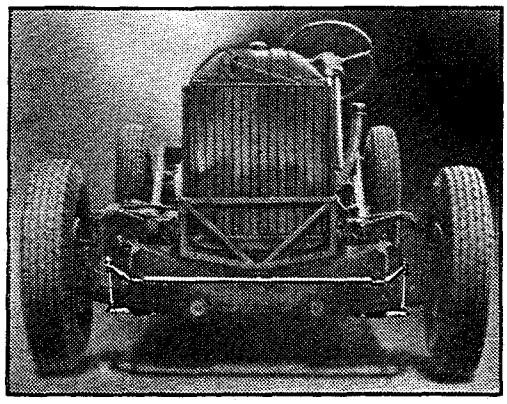

Torsion Shaft Front Stabilizer— LaSalle and "61"

greatly reduces body roll and side sway, improving comfort and safety over other cars. The front stabilizer is also an important factor in high speed roadability.

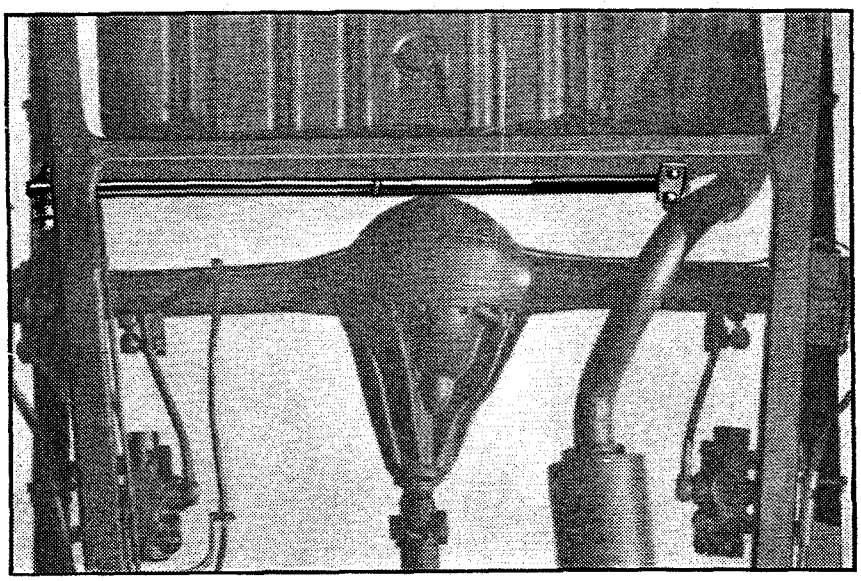

Cross Link Rear Stabilizer on the Fleetwood V-8 Chassis

The *effective stiffness* of the new front stabilizer on LaSalle and Cadillac "61" has been *greatly improved* by increasing its diameter and reducing its length. This is another factor in the usual roadability of these new models.

With Hi-Plane Hotchkiss Drive the cross link rear stabilizer is both unnecessary and undesirable to LaSalle and Cadillac "61." For the Sixty Special and Fleetwood V-8 a cross link rear stabilizer is most efficient as an anti-shake and roll resistor to body movements. The heavy steel bar is linked between the rear frame cross member and the rear spring clip. These links permit the stabilizer to counteract both rolling and sidewise body-to-chassis movements.

Knee Action

The attainment of Controlled-Action Ride in all new Cadillacs and LaSalle results in equally large measure from Knee as well as from improvements in rear suspension design.

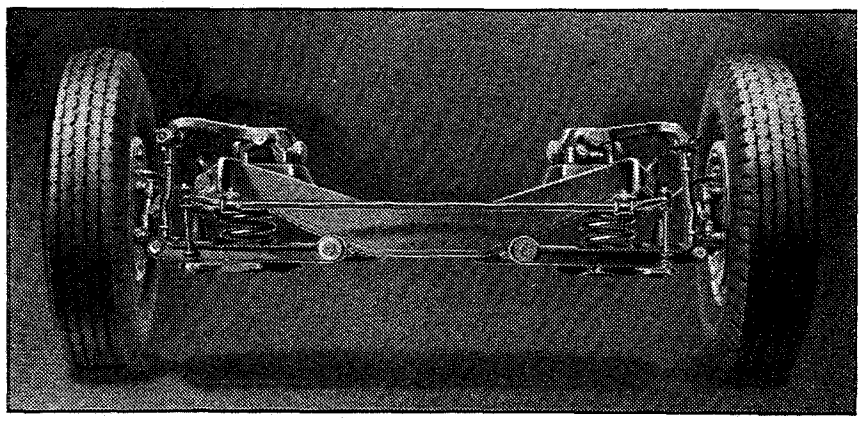

Cadillac "61"-LaSalle Knee Action

The reason for a more complete absorption of road shocks and a greater ease of handling is due in Cadillac engineered Knee Action to adherence to fundamental principles regarding the proper springing of the car's weight. The ideal is a close approximation of spring rates or of the springs' flexing ability. The front should be slightly softer than the rear springs. Then, as the car moves over irregularities in the road's surface, spring action from front to rear of the car becomes uniform, shock is absorbed by the springs and passengers

within the car are not conscious of any disturbances. This is the important reason for the unequalled Cadillac-LaSalle ride.

Other cars with conventional front axle and leaf type front springs, and those which employ independent front suspension without attempting to balance relative motion between front and rear springs, give a definite pitching and tossing ride for rear seat passengers. There is no uniformity between the upward and downward movement of the front suspension and the rear wheels.

From every practical design standpoint and in view of the results obtained there is no equal to Cadillac-designed Knee Action and to the Cadillac-LaSalle ride.

In Cadillac Knee Action each front wheel is fastened directly to the frame by two heavy steel arms which hold the wheels in perfect alignment. This construction is far superior to the conventional axle suspension in that the movement of either wheel is not

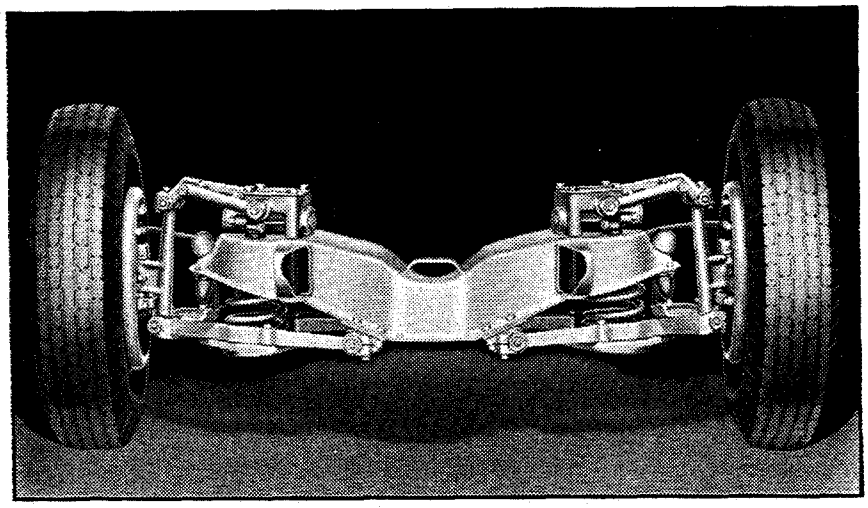

Cadillac Fleetwood Knee Action

transferred to the steering system. This eliminates car wander and shimmy. Steering is much less affected in event of tire blowout at high speeds. Caster angle is not affected by brake or spring action.

The upper forked arms are attached to and operate

the shock absorbers which dampen excessive spring action. The lower arms are fastened with shaft supports to the frame, an inherently rigid method of mounting.

Knee Action for LaSalle and Cadillac "61" has several refinements contributing *rigidity* and *softer riding comfort* and *greater durability*.

The lower control arms are now straight which increases their strength and also give greater road clearance at the center of the car where it is most important. The new steel arms are more rigid than before. A new type of rubber bushing is used at the inner ends of both lower control arms. They reduce friction, thus soften riding qualities. Also, they better *insulate the chassis from road shock and noise*. They do not wear, hence will last throughout car life.

The use of Lifetime Rubber Bushings throughout the rear suspension and at the ends of the Knee Action lower control arms has two important sales advantages for LaSalle and Cadillac "61." There is not a single lubricating point in the entire rear suspension. Cost of chassis lubrication is reduced 10%.

Each front spring consists of a helical coil held between a seat on the lower forked arm forging and a second seat formed as an integral part of the chassis frame. Front frame arms encircle the helical coils on LaSalle, "61" and Sixty Special, while the coils are mounted outside the frame side bars on Fleetwood V-8.

Steering Systems

One of the first impressive features when driving the new Cadillacs or LaSalles is their superior ease of handling in city traffic or at high speeds on the open road. This is a noteworthy and exclusive feature for 1939, providing safety and mental ease to the driver.

An important *reason for superlative Cadillac-LaSalle controllability is a more accurate steering geometry* than is

conventionally obtained and the new *Controlled-Action Ride* which provides car stability over all kinds of roads and at all speeds. Steering geometry is the relationship between the steering arms attached to the front wheels and the steering linkage. When this relationship is correct under all conditions of wheel movement, as in Cadillac-LaSalle cars, then the steering is not affected by road inequalities.

With Knee Action the geometry approaches absolute accuracy, a condition impossible to achieve with a front axle. By designing the simple component parts of the system to operate in correct geometric relationship to

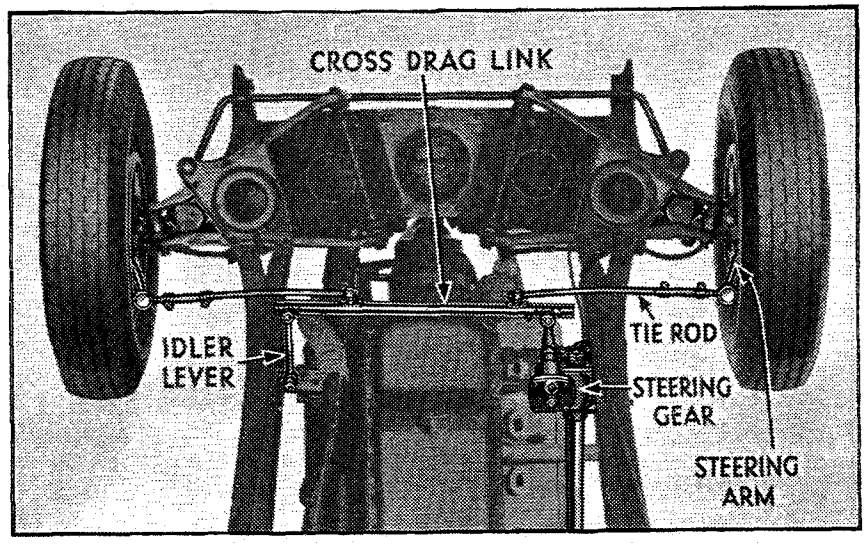

Parallel Cross Steering—LaSalle and Cadillac "61"

one another, steering accuracy is obtained and car wander and steering wheel whip are virtually eliminated.

Such a relationship is obtained in the new LaSalle and Cadillac "61" by new *Parallel Cross Steering*. The heavy steel steering arms attached to the front wheels are connected to and operated by two tie rods, the inner ends of which are attached to a cross drag link operated in turn by the steering gear. The tie rods are nearly the same length as the front suspension lower control arms and parallel to them, thus the motions of

the wheels and the arcs of the tie rods are co-ordinated and steering accuracy is assured.

A *greater feeling of steering rigidity and sturdiness* is obtained in LaSalle and Cadillac "61" by increasing the steering column outer tube thickness.

The Center Point steering systems for the Sixty Special and Fleetwood V-8 also feature accurate steering geometry but have certain design differences to suit the steering systems to the different size chassis. A cross mounted drag link controls the two tie rods at the center on the Special. The Fleetwood V-8 has a longitudinally mounted drag link also operating the tie rods at the center by means of a lever. The Fleetwood has anti-friction needle bearings at the top and bottom of the king pins which reduce friction. This provides

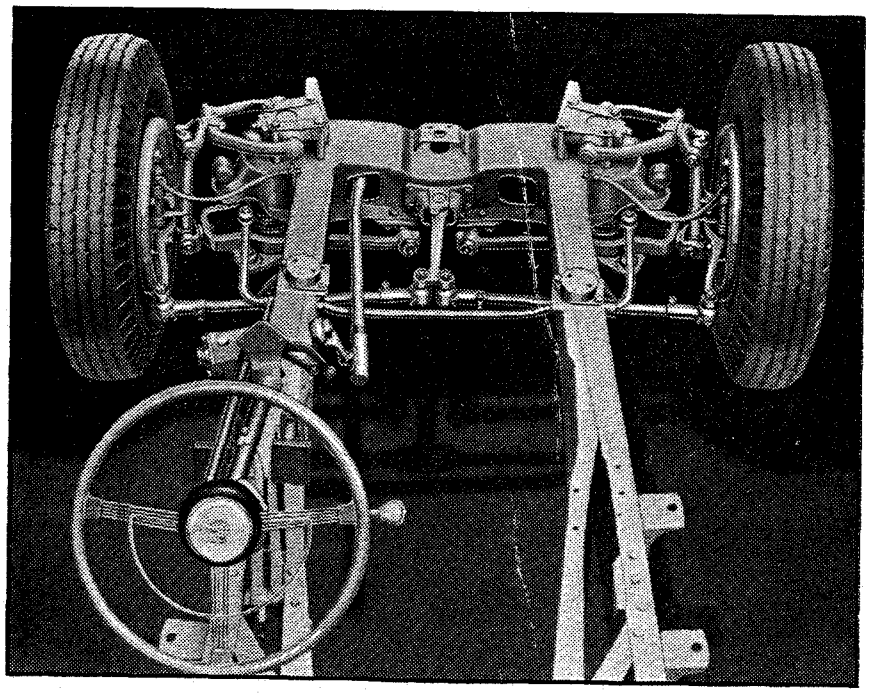

Fleetwood V-8 Center Point Steering System

the larger Cadillac with steering ease equivalent to smaller models. In conventional steering systems friction must be provided deliberately to offset their lack of accurate steering geometry.

Drag links on all models are operated by a roller shaft extending from the steering gear housing. An eccentric bushing around this shaft facilitates steering gear adjustment. All models use the sturdy worm and double roller design.

Steering column universal joints are used on the Fleetwood V-8, making this 141-inch-wheelbase car exceptionally easy to handle. They eliminate even very small tendencies toward steering wheel "nervousness." These universals are made the same size as those on the propeller shaft of other cars and will withstand a pressure of 1000 ft. lbs.

Frames

Frames for all Cadillacs and LaSalle are of rigid dual X-type design, heavily reinforced for strength and safety. Specific structural differences are required for each series in order to best accommodate the sizes and weights of the new models.

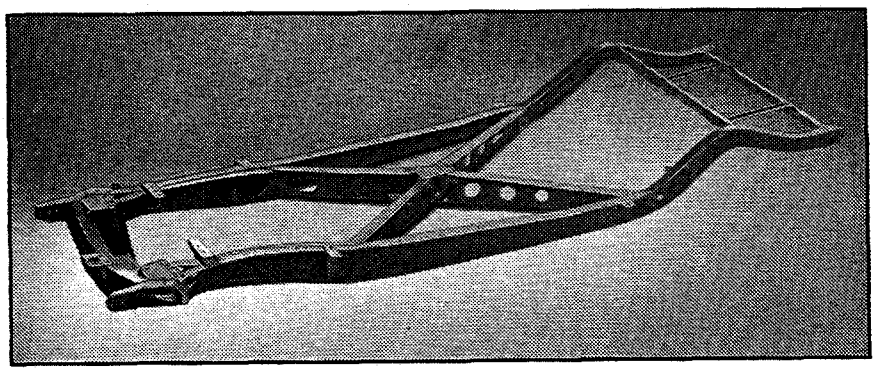

New LaSalle Double Drop Rigid X, I-Beam Frame

LaSalle has an entirely *new frame of double drop design*. It is 2½ inches lower to provide lower lines and lower body floors. Road clearance is 8¼ inches under the rear axle as before.

Side bars are of channel construction and X-members are of I-beam construction. These are heavier for the

convertible types to lend extra rigidity in compensation for their lighter bodies. All bodies are now mounted to the frame side bars directly except at two points. This feature increases strength.

Front X-members are riveted to the frame side bars and are additionally reinforced to form a wide box section for stiffness. Rear arms are tapered to provide uniform strength throughout that is not weakened by the propeller shaft passage. Plates reinforce the center junction point of the X-members at both top and bottom for additional strength.

The unusually heavy front cross member is also reinforced by a steel plate at the bottom to which is bolted the brackets supporting the strong cross rods for rigid attachment of the lower wishbone arms of the Knee Action assembly. The cross member also supports the front end mounting which consists of securing the front fender braces and radiator casing to a cradle in front of and attached to the radiator core. This cradle has been redesigned for even greater strength and rigidity. Entire *front end steadiness* and feeling of *car stability* have been *greatly improved.*

The Cadillac "61" frame is similar in design and construction to LaSalle. It is longer and much heavier, particularly in the X-members, because of the car's six inches greater wheelbase and greater weight. For convertible types the frame has additional side bar reinforcements over the rear kick-up.

The Sixty Special requires a very low double drop frame to achieve its striking, ground hugging appearance. A rigid box reinforcement extends from the rear X-member arms to the cross member in front of the gasoline tank.

The Fleetwood frame has heavy channel members for both side bars and X-arms. Box section reinforce-

ments strengthen the junction of X-members and frame side bars. The X-member center junction has the

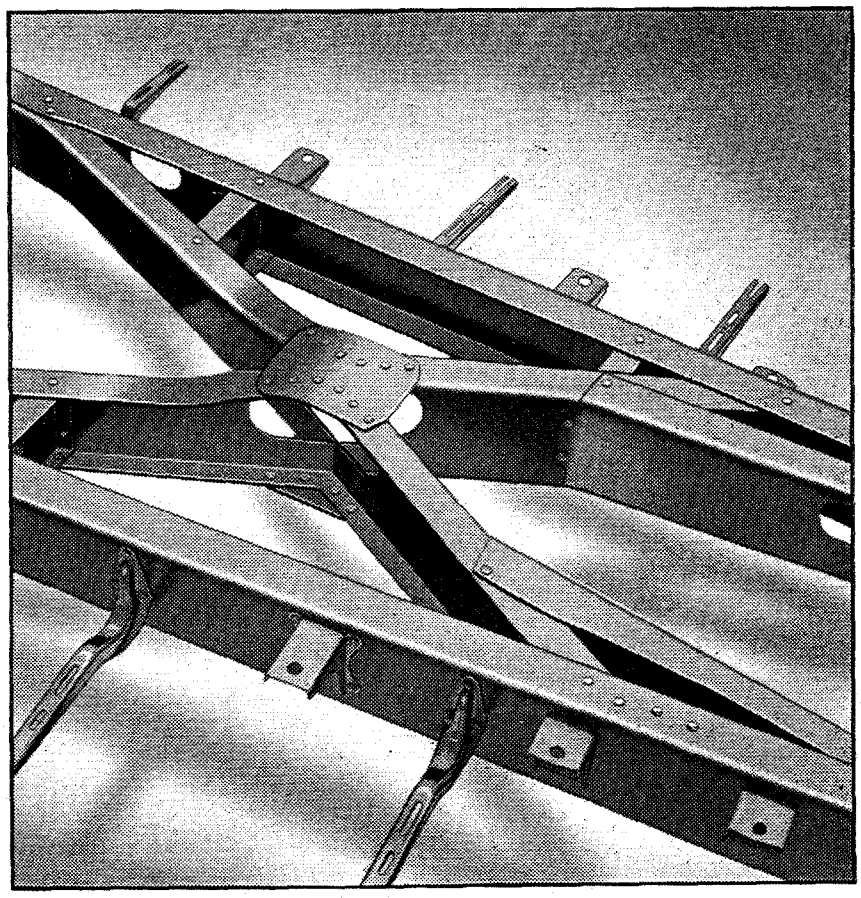

Heavy Fleetwood X-Type Channel Frame with Deep Center Junction

exceptionally great depth of 9 7/16 inches. Heavy steel plates are used at the center junction on frames for convertible body types to provide maximum rigidity.

Hydraulic Brakes

All Cadillacs and LaSalle utilize the self-energizing hydraulic principle for braking because this method insures a positive, equal braking action on all four wheels which can not be achieved by any other method.

Inherent positiveness of the Cadillac braking system results from an infallible law of physics which says that pressure exerted upon a liquid within a container will be

distributed equally and undiminished in all directions. Applying this principle in the Cadillac or LaSalle braking system, pressure is created by the foot on the brake pedal which controls a piston within a cylinder of fluid.

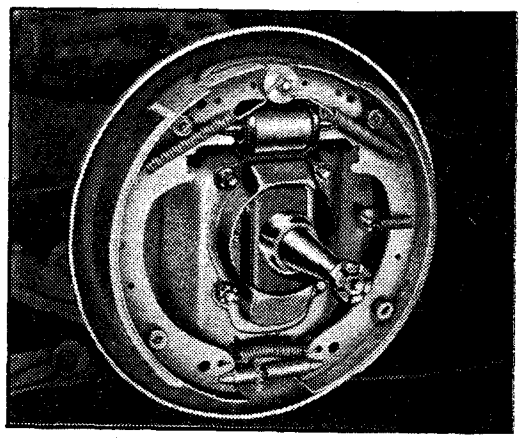

Cadillac Hydraulic Brake

Double thick steel piping and heavy flexible hose connections conduct this fluid to two additional pistons in each wheel brake cylinder, these in turn forcing both brake shoes simultaneously against the brake drum and retarding the car. Both shoes for all four wheels must be in contact with their drums before hydraulic pressure is applied. This prevents pulling or grabbing of an individual wheel.

Tubing is carried inside the frame side bars to eliminate any danger from flying stones. A supply tank at the master cylinder maintains a constant supply of fluid, regardless of expansion or contraction due to temperature changes.

Brake drums are of the expensive composite construction, giving a wear and score resisting, heat radiating surface of cast iron moulded to a strong steel back plate. These drums, in addition to self-energization, permit the use of hard durable linings and extend the life and dependability of the brakes. Total brake lining area for LaSalle and Cadillac "61" is 196 sq. in. Lining area on the Sixty Special is 208 sq. in. and on Fleet-

wood 258 sq. in. On all models large brake lining area promotes long brake lining life.

Braking ratio is 54½% front and 45½% rear on LaSalle, Cadillac "61" and Special; 57% front and 43% rear on the Fleetwoods. The reason for larger cylinders on the front wheels is because of the tendency of car weight to shift forward on deceleration increasing traction on the front wheels. This action is thereby utilized to increase braking effectiveness.

Duo-servo brake action, or self-energization, is used because this method permits the use of hard molded linings of longer wearing life and provides greater ease of brake operation than can be obtained with a small amount of energization. The self-energizing principle involves a conversion of the car's motion, whether in forward or reverse direction, into additional braking energy. Brake shoes when applied tend to wrap themselves into tighter contact with the drums, thereby providing maximum braking energy with a minimum of pedal pressure. Both brake shoes float within their drums so that each can adjust itself to the drum giving equal pressure around each brake shoe. Both shoes are, therefore, effective in stopping the car whether in forward or reverse speeds. The entire brake lining contacts the drum, wearing evenly and prolonging its life.

In another method of hydraulic braking which claims no self-energization, both shoes are anchored to the brake support plate, hence only one shoe is effective in stopping the car in either direction of travel. This obviously reduces effective brake lining area by half and greatly increases brake lining wear. Also the location of this anchor relative to the brake drum must be

precisely maintained to secure uniform contact between shoes and drum. This is difficult, if not impossible, resulting in localized lining wear and either very hard

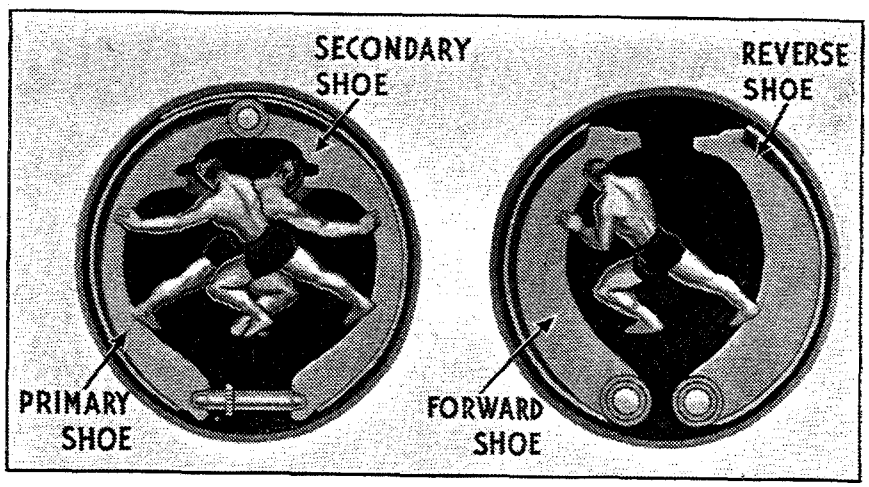

With Self-Energization, Both Brake Shoes Are Effective *With the Other Method, Only One Shoe Is Effective*

or very sensitive brake application. This makes it often impossible for the driver to judge accurately the amount of foot pressure necessary to bring his car to a smooth, easy stop.

Hand Brake

A *new handbrake lever* is used on all new models. The lever has been moved closer to the driver and is *more easily reached.* It now has an easily operated thumb release which locks the lever quietly in any position.

The handbrake operates an independent mechanical brake system which operates the rear brake shoes for parking and emergency stops. A feature of this system is its triangular equalizer for greater dependability than can be obtained with other types. Individual cables run from the equalizer, operated by the brake lever, to each of the rear brake shoes. Should one of these cables become inoperative, the equalizer would still operate the other shoe, thereby insuring brake action.

On some cars the hand brake acts upon the propeller shaft, hence if one wheel is jacked up in order to change a tire, the brake will not hold the car. Such a condition could be dangerous for a person not familiar with this type of hand brake. In addition, such a braking system obviously applies the braking load through the drive line and rear axle gears. Quick application when the car is moving might have disastrous consequences.

Propeller Shaft

The propeller shaft is of tubular spline construction which combines great strength with light weight. Splines are formed on the inside of a tube pressed into a second tube equal in diameter to the propeller shaft proper. The splined and shaft tubes are welded together.

Prior to assembly each propeller shaft is balanced dynamically and statically to ½ inch ounce at 4200 R.P.M. to prevent whip at high speeds. Precision manufacture insures maintenance of propeller shaft and universal joint balance.

Universal joints are extremely large and durable and have two permanently lubricated needle bearings.

Even on the longer wheelbase Fleetwoods short propeller shafts are made possible by the heavy transmission extension. This increases high speed smoothness.

Hypoid Rear Axles

All series of Cadillacs and LaSalle have hypoid rear axles which permit low body floors, unusually great headroom and door heights, and extensive vision.

Because of longer wheelbases and greater weight the larger Fleetwood hypoids have certain differences in construction from the rear axle used in LaSalle, Cadillac "61" and Sixty Special.

The differential bearings are adjusted by shims on LaSalle, "61" and Special Sixty while on the Fleetwood V-8 the sleeves which position these bearings are threaded so that adjustment is effected by rotating the sleeve. Fleetwood V-8 ring gear diameter is eleven inches; on the three smaller series it is 9⅜ inches.

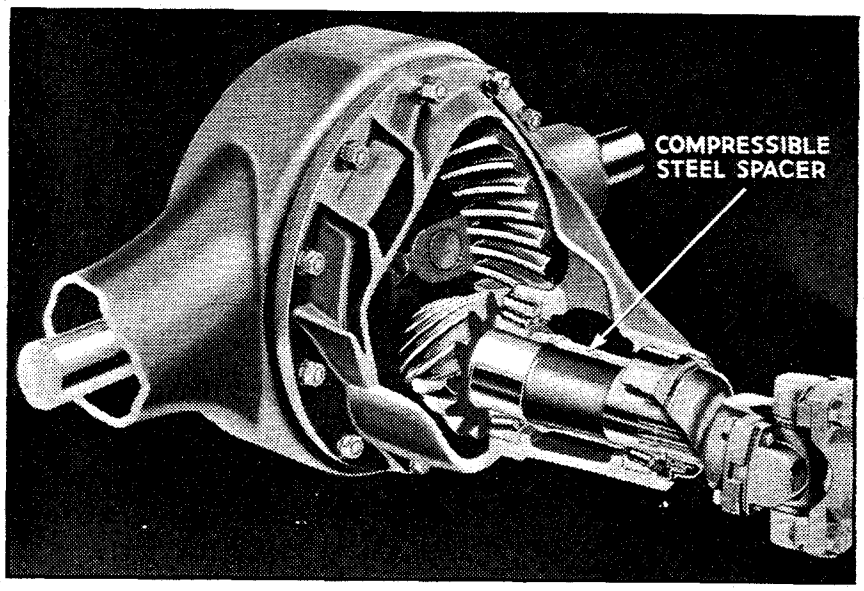

Cadillac-LaSalle Precision-built Hypoid Rear Axle

The pinion shaft bearings on the new hypoids for both the Cadillacs and LaSalle are of tapered roller design. Oil passages are provided in the carrier casting to lubricate these bearings. This further insures axle durability and quietness.

A new compressible steel spacer between the two pinion bearings replaces the former shim adjustment on all axles. The spacer *automatically maintains end loading* of the bearing inner races, preventing them from turning.

Both hypoid axles conform to the same basic principles of Cadillac design which provide long life in the assembly. All ring gears and pinions are held to extreme precision limits. The variation from true accuracy is less than can be measured by ordinary methods. Each gear set is carefully matched by hand in a sound proof

room. In addition, each gear case is specifically manufactured for its own set of gears, a quality standard not adhered to by any other manufacturer.

The differential housing is cylindrical in shape to contribute strength to the axle. It encircles the tapered roller differential bearings and is carried in a heavily ribbed carrier for rigidity. The axle cover is welded in position to further increase housing rigidity. All of these features are of Cadillac design and add strength and ruggedness exclusive to Cadillac-built cars.

The rear axle ratio for LaSalle, Cadillac "61" and Sixty Special is 3.92—1. The Fleetwood has a 4.58—1 ratio. These ratios are important factors in the superior accelerative ability and low piston speeds of Cadillac-built V-8 engines.

Wheels and Tires

Tire sizes for LaSalle, Cadillac "61" and Sixty Special continue at four ply 7.00 x 16. The Fleetwood V-8 employs six ply 7.50 x 16 tires.

For LaSalle, "61" and Special stronger forged steel front hubs are used. Also the *front wheel spindle* and *bearing* inside diameter is *larger*. This improvement *increases strength and safety*. Four slots have been added to each disc wheel on these models to permit the use of emergency chains and to assist in brake cooling.

In all LaSalle and Cadillac "61" body styles with five wheel equipment the spare tire and wheel is mounted on the right side of the trunk or deck and has a platform over the tire. This platform fastens to the wheel in the same way that a hub cap snaps into position and is easily removed.

On the Sixty Special and Fleetwood models the tire and wheel are mounted beneath a shelf extending the full width of the trunk or deck compartments.

CADILLAC AND LA SALLE COMMERCIAL CHASSIS

Cadillac offers three commercial chassis superbly designed especially for funeral car or ambulance usage.

The LaSalle and Cadillac "61" chassis have all of the outstanding new features, including Hi-Plane Hotchkiss Drive, described in the V-8 Chassis Section.

Their frames, however, are of one piece unit design and of heavier steel in order to best meet commercial requirements. Wider 2½" brake drums are used on the front wheels. Two propeller shafts have an intermediate rubber mounted anti-friction bearing. There are special springs front and rear, six ply tires, 18 points of body attachment among the many special features required to suit these chassis to their employment.

The LaSalle chassis wheelbase has been reduced 3⅞ inches improving maneuverability. Yet the useful length of the chassis has been considerably increased. The useful length of the "61" chassis has also been increased.

The exceedingly powerful Series 75 chassis has a new distinguished frontal appearance. A special transmission provides great tractive effort while the 6.7 to 1 compression ratio affords extraordinary power.

As the outstanding leader in the hearse and ambulance chassis field, Cadillac has created extensive good will among these owners. Thus, while the retail salesman does not participate directly in this business, many excellent Cadillac-LaSalle pleasure car prospects are available to him through his cooperation with the body builders who employ Cadillac-LaSalle chassis.

CADILLAC SIXTEEN

Maintains the Highest Standard of the World

The creation and introduction of the first sixteen cylinder passenger car by Cadillac in 1930 reaffirmed Cadillac's reputation, previously established many years before, of being the Standard of the World in motor car design.

Cadillac's standards of excellence, both in engineering and manufacture, prerequisite to building the world's finest and most luxurious motor car, are necessarily the highest and most envied in the industry. That these same standards of excellence are rigidly adhered to in building Cadillac Fleetwood, Cadillac Sixty Special, Cadillac "61" and LaSalle is ample justification of the greater value in-built in every motor car at Cadillac.

Cadillac, however, has never rested upon her world-renowned laurels. "Progress Means Change." Although the first V-16 established standards never approximated by any other fine car builder, Cadillac engineers continued to strive toward lifting those standards even higher.

Last year Cadillac revolutionized her own World's Standards by the introduction of a motor car embracing:

The first 135 degree sixteen cylinder V-type engine.

A completely redesigned chassis providing greater durability and comfort.

Coachcraft which surpassed every Fleetwood tradition.

The 1938 Cadillac Sixteen established a new high Standard of the World in Performance, Smoothness, Comfort and Luxury. In so doing the Sixteen has displaced and antiquated all twelve cylinder automobiles

and has made the revered prestige of Sixteen Cylinder Cadillac ownership available to a far greater number of people than ever before.

Such high standards as these set by the Cadillac Sixteen will never be approached by any fine car for several years to come. Cadillac engineers are, however, constantly devoting attention to their masterpiece through research, testing and development.

Minor refinements are made and adopted from time to time but no means have yet been discovered which greatly improve the superlative features already established. For these reasons Cadillac Sixteen for 1939 remains substantially unchanged.

The broad Cadillac engineering achievement in the Sixteen is the car's *immeasurable practicality*. The Cadillac Sixteen is the first and only large fine car incorporating every practical feature of maneuverability heretofore believed obtainable only on small models. The Sixteen driver has no consciousness of unwieldy size or weight.

Fleetwood has designed twelve optional custom coachwork types for the Sixteen chassis. These Fleetwood models are illustrated with their dimensional drawings on the following pages. It is a noteworthy Fleetwood achievement that these selections embrace every custom type usually selected by motor car buyers in fourteen exterior color combinations with harmonizing interiors.

In addition, for those who desire individual creations to satisfy their personal fancy, Fleetwood continues to provide a corps of designers for the purpose. These craftsmen are masters in the art of most distinctive motor car design and will comply with every reasonable request of any purchaser.

SIXTEEN EXTERIOR STYLING

The new Cadillac Sixteen combines every practical feature, such as ease of entrance and interior roominess, comfort and extensive visibility in an amount never heretofore achieved with modern most dignified styling.

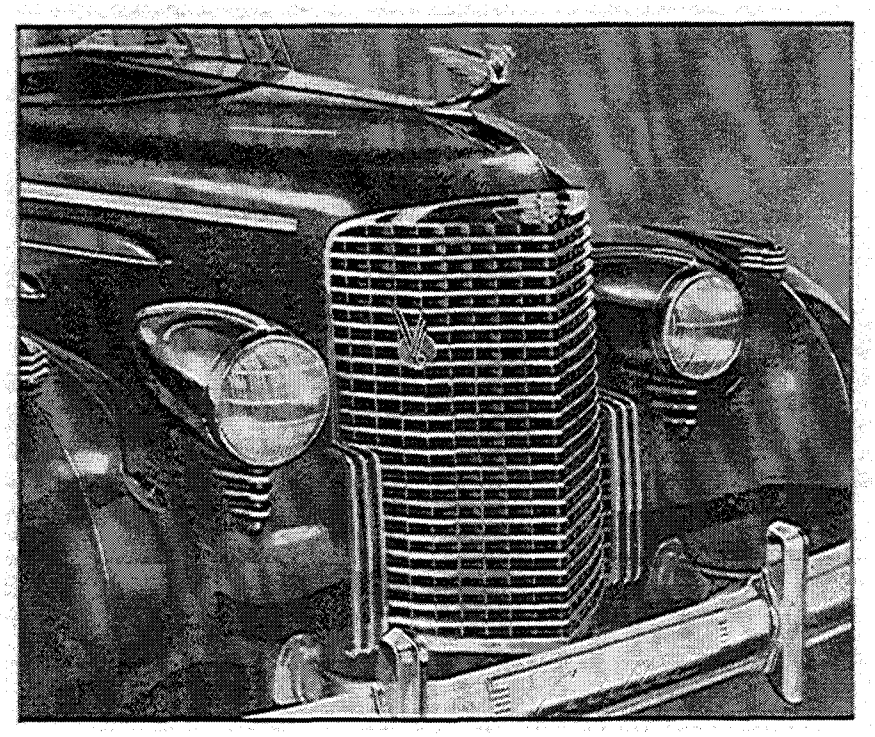

Sixteen Front View

Because of the conservatism of the Cadillac Sixteen clientele and in order to further the distinctiveness of the Sixteen's styling, its appearance has been kept the same as last year.

The exceedingly wide die-cast radiator grille differs in design from all other Cadillacs and is heavily chromed. It consists of large rectangular cells and heavy horizontal bars which curve inwardly in their upper portion into the plane of the hood louvers, and outwardly in their lower portion into the front of the massive sweeping fenders. The original V-16 monogram on a red enamel background is applied to the right side of the grille. A small Cadillac crest surmounts the grille below and in front of the radiator ornament

Headlamps are long and streamlined and appear submerged into the fenders. Beneath them are large, vertical die-cast projections. Fender lamps of modern design blend into the uppermost curve of the fenders.

Groups of three steamlined louvers provide unique Sixteen distinction on the hood side panels and on both front and rear fender skirts. Running boards are sepa-

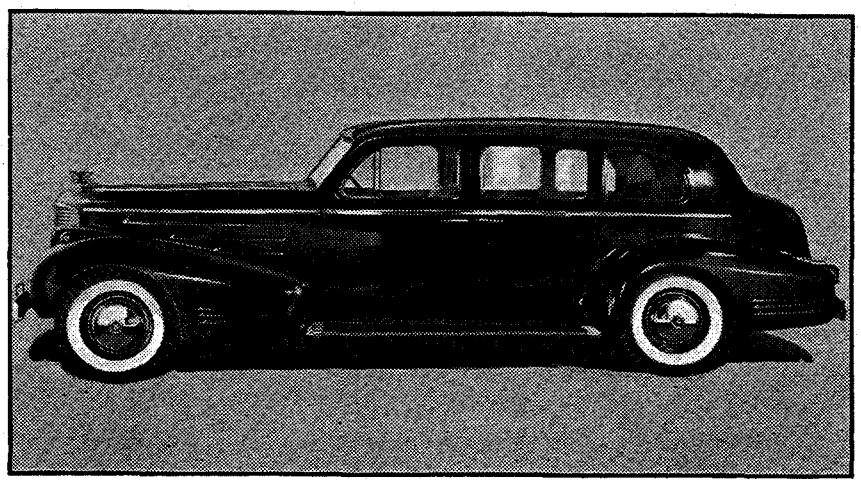

Side View

rated from the fenders and are completely rubber covered except for chrome protectors in which the die-castings are formed into longitudinal vanes.

Large chrome wheel discs are decorated with a "V-16" monogram with a round red and black cloisonne background.

Impressive dignity is reflected by the manner in which the trunk is built to blend harmoniously with the rear quarter body lines and the smooth Turret Top. The trunk is extremely large and luxuriously tailored in appearance. Distinctively designed tail lamps appear as an integral part of the sweeping rear fenders.

A *new combination license plate support, light and trunk lid handle* improve neatness and lend even greater dignity to the Sixteen rear view.

CADILLAC SIXTEEN INTERIORS

Highest Fleetwood Expression in Luxurious Comfort

The Sixteen coachwork created by Fleetwood provides greater interior roominess in all dimensions than has ever before been achieved. Cars of longer wheelbase have less interior space. The reason for the Sixteen's dimensional supremacy is its 135 degree V-type engine design. This is by far the most compact engine of this size ever built and requires a much shorter hood than any twelve or large straight 8.



Luxuriously Appointed Rear Compartment

Doors are high and wide, facilitating access into the front and rear compartments of the car. In addition to large door sizes, the Fleetwood design of auxiliary seat construction in seven passenger models reduces the thickness of the front seat back, greatly increasing foot room for the auxiliary seat passengers and permits them to step directly into the seats without cramping or twisting.

Additional features of this auxiliary seat design are its neat paneled appearance which avoids annoying and unsightly zipper flaps or latched covers; and unusual comfort from increased leg room, higher seat backs and wider seat cushions which meet at the center providing room for three persons if desired.

Within the car there is most ample headroom, legroom and seat room. There is complete freedom of movement for three large persons on the rear seat while unobstructed front compartment floors, made possible by placing the shifting lever on the steering column, afford a wealth of room for three on the front seat.

Outward vision for both passengers and driver within the Sixteen is far greater than other cars of this size, thereby providing greater comfort and safety.

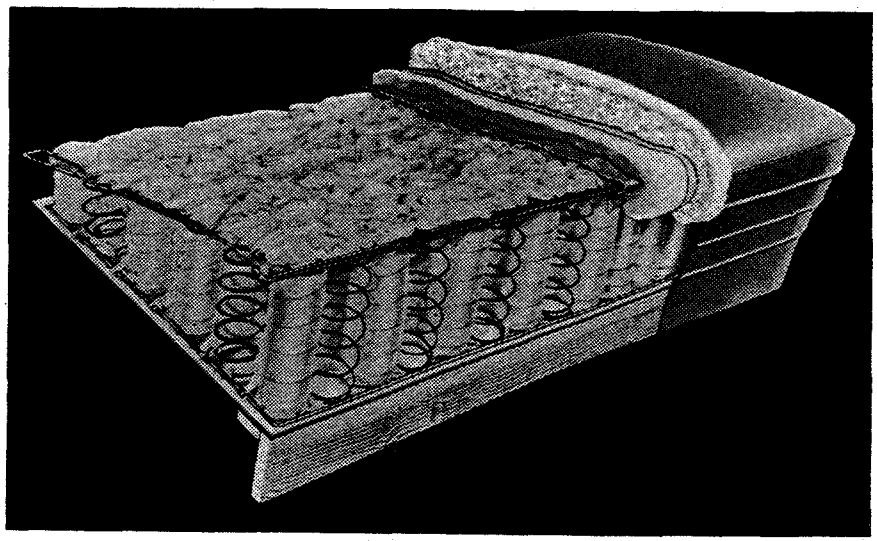

Fleetwood Seat Cushion Construction

Even more luxurious are the interior appointments of the new 1939 Sixteen. The very finest of upholstery fabrics woven to precise Fleetwood specifications are available in ten different patterns. Assist grips, decorated with tenite, are placed on each rear quarter pillar of most models. There are assist handles on the front seat back at both ends of the robe cord on Sedans. *Wear resisting leather is now used on top of front door arm rests.*

New light burled walnut garnish panels lend cheeriness to the Sixteen interiors.

The rear compartment floor is snugly fitted with a heavy pile plush carpet which not only lends richness to interior appearance, but serves as a most efficient insulator against sound and climatic conditions. These carpets are of special Fleetwood design. They have a rubber vulcanized base and tapering edges without binding for close fitting. The vulcanizing process prevents fraying at the edges.

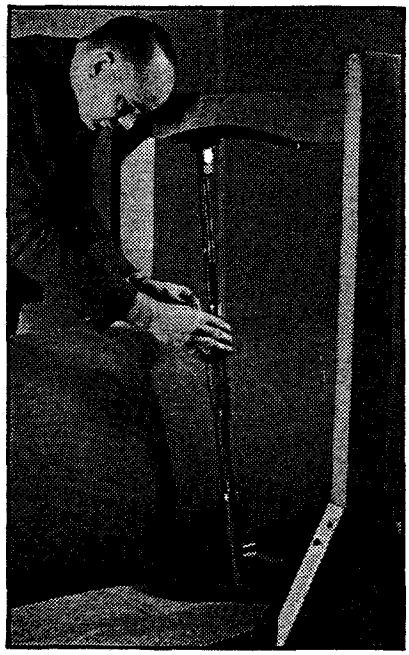

Testing Seats to Insure Comfort Under Varying Loads

All of the high windows are of Security Plate Glass. No-draft ventilation throughout the interior of the car is provided by individually controlled ventilators. Front windows have ventipanes while the rear quarter windows move rearwardly, providing an air inlet of three and one-quarter inches if desired. Most closed car front ventipanes are fitted with *new inside bolt-type locks.*

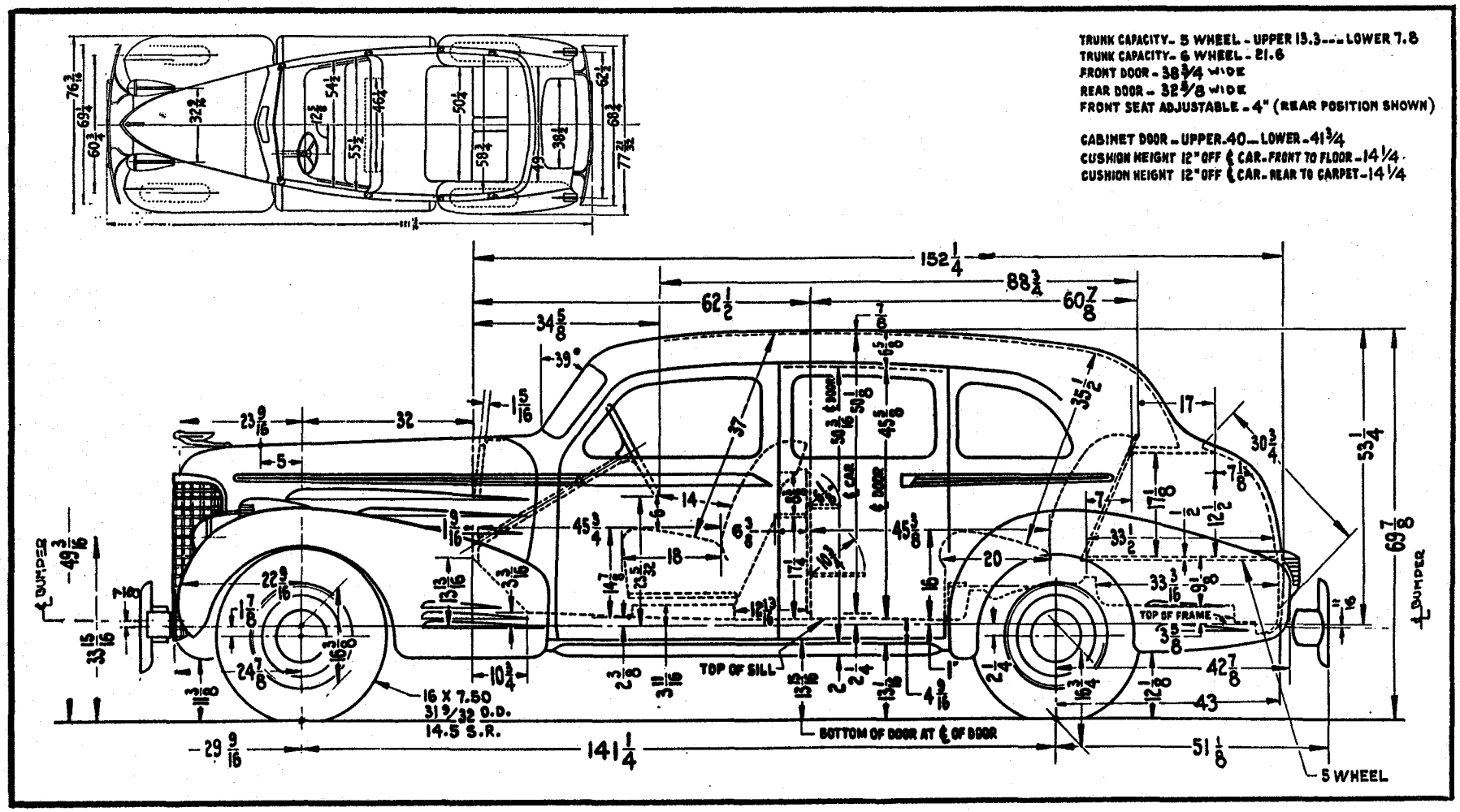
TRUNK CAPACITY- 5 WHEEL - UPPER 13.3 --- LOWER 7.8
TRUNK CAPACITY- 6 WHEEL - 21.6
FRONT DOOR - 38 3/4 WIDE
REAR DOOR - 32 5/8 WIDE
FRONT SEAT ADJUSTABLE - 4" (REAR POSITION SHOWN)
CABINET DOOR - UPPER 40 - LOWER - 41 3/4
CUSHION HEIGHT 12" OFF ℄ CAR - FRONT TO FLOOR - 14 1/4
CUSHION HEIGHT 12" OFF ℄ CAR - REAR TO CARPET - 14 1/4
152 1/4
88 3/4
62 1/2
60 7/8
34 5/8
39°
35 1/2
17
30 3/4
53 1/4
69 7/8
BUMPER
TOP OF SILL
TOP OF FRAME
16 X 7.50
31 9/32 O.D.
14.5 S.R.
BOTTOM OF DOOR AT ℄ OF DOOR
141 1/4
51 1/8
43
42 7/8
5 WHEEL

CADILLAC SIXTEEN

5-TOURING SEDAN

Style No. 9019—(Illustrated on Page 184)

Equipment and Appointments

Rear Quarters: Metal with quarter windows.

Front Seat: Entire front seat cushion and back rest adjustable 4". Seat cushion has ¾" rise. Seat frame integra with center body pillars.

Rear Seat: Seat cushion and seat back stationary.

Lighting: Dome light operated by rear doors and left rear pillar switch. Also corner lights, switch on right rear pillar.

Windows: Front door windows are equipped with individually controlled ventilator feature. Rear quarter windows move rearwardly 3½". Front ventipanes have inside locks. Security Plate Glass.

Interior Panels: Light burled walnut.

Trim: Ten Weise cloths; tan, gray or brown; exclusive patterns; tufted mode.

Smoking Equipment: Two ash receivers and two pass-around lighters located at front of rear compartment side arm rests; pass-around lighter and ash receiver in instrument control panel recess.

Equipment: Two triangular shaped spring type foot hassocks, plush carpet covered to match floor carpet; silk curtain for rear window; two assist straps located on right and left hand rear pillars; two larger interior sun visors, fully adjustable; folding center arm rest in rear seat back, side arm rests in rear compartment and on front doors; slash pockets in each rear arm rest. Assist handles at each end of robe cord.

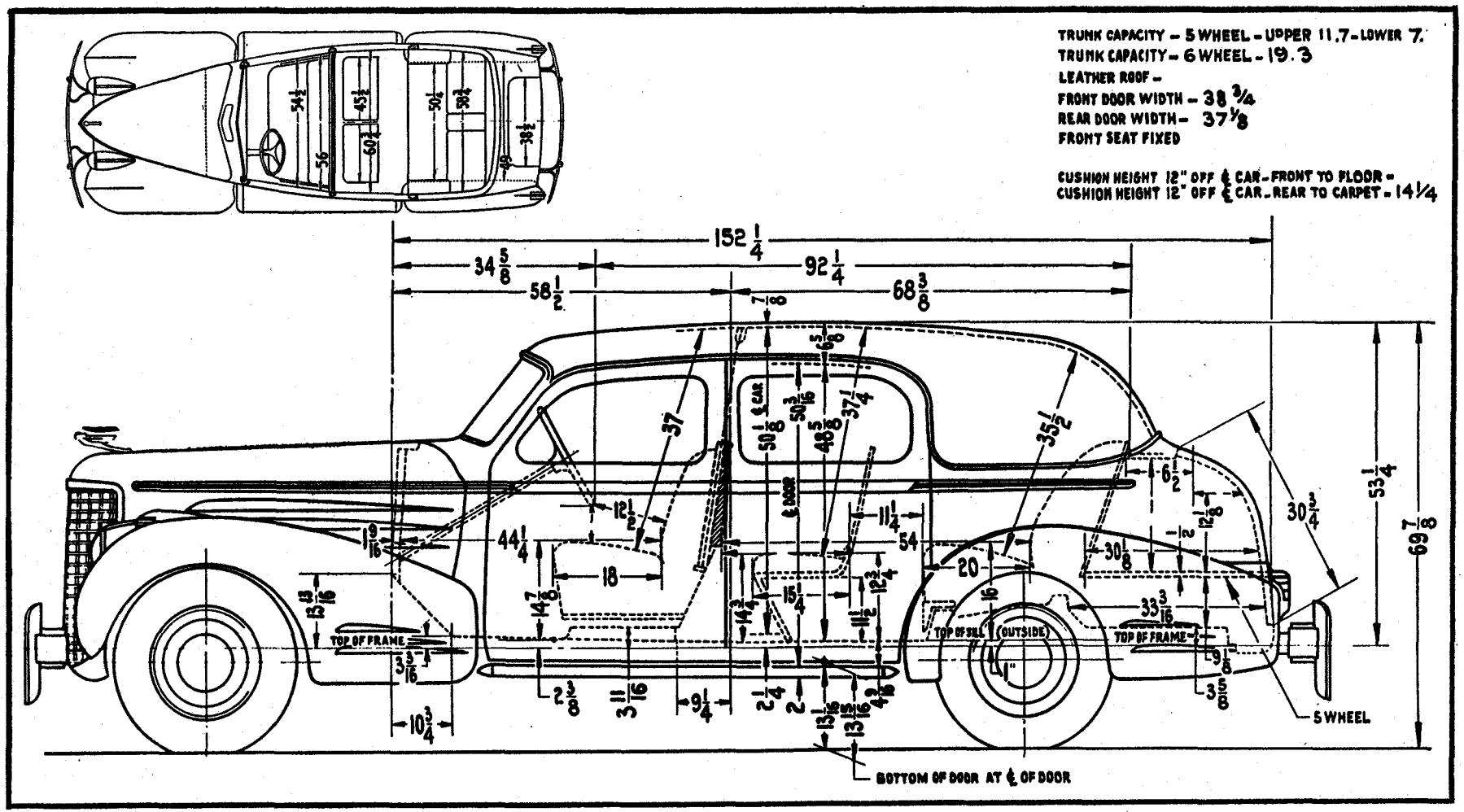
TRUNK CAPACITY - 5 WHEEL - UPPER 11.7 - LOWER 7.
TRUNK CAPACITY - 6 WHEEL - 19.3
LEATHER ROOF -
FRONT DOOR WIDTH - 38 3/4
REAR DOOR WIDTH - 37 1/8
FRONT SEAT FIXED
CUSHION HEIGHT 12" OFF ℄ CAR - FRONT TO FLOOR -
CUSHION HEIGHT 12" OFF ℄ CAR - REAR TO CARPET - 14 1/4
152 1/4
34 5/8
92 1/4
58 1/2
68 3/8
53 1/4
69 7/8
30 3/4
TOP OF FRAME
TOP OF SILL (OUTSIDE)
5 WHEEL
BOTTOM OF DOOR AT ℄ OF DOOR

CADILLAC SIXTEEN

5-PASSENGER TOWN SEDAN (Trunk)

Style No. 9039—(Illustrated on Page 186)

Equipment and Appointments

Rear Quarters: Full metal back.

Front Seat: Entire front seat cushion and back rest adjustable 4". Seat cushion has ¾" rise. Seat frame integral with center body pillars.

Rear Seat: Seat cushion and seat back stationary.

Lighting: Dome light operated by rear doors and left rear pillar switch; two rear corner lights operated by right rear pillar switch.

Windows: Front and rear doors are equipped with individually controlled ventilation feature. Front ventipanes have inside locks. All windows Security Plate Glass.

Interior Panels: Light burled walnut.

Trim: Ten Weise cloths; tan, gray or brown; exclusive patterns; tufted mode.

Smoking Equipment: Ash receivers recessed in rear arm rests; two pass-around lighters in front of rear ash receivers; pass type lighter and ash tray in instrument control panel.

Equipment: Two triangular shaped spring type foot hassocks, plush carpet covered to match floor carpet, silk curtain for rear windows; large compartment on back of front seat; two larger interior sun visors, fully adjustable; folding rear center arm rest, arm rests on both front doors; two sliding arm slings; assist handles at each end of robe cord; electric clock in center of front seat back.

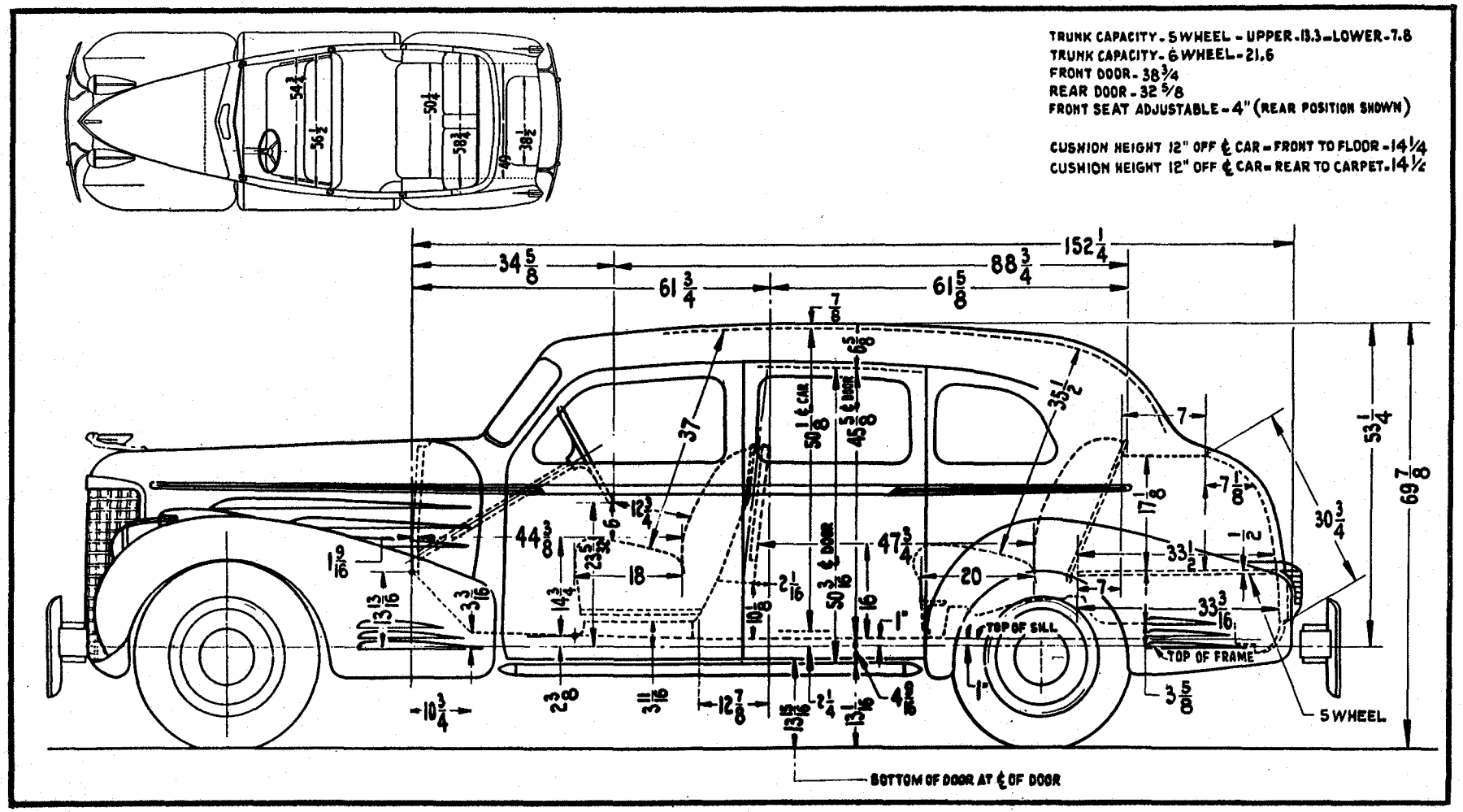
TRUNK CAPACITY - 5 WHEEL - UPPER - 13.3 - LOWER - 7.8
TRUNK CAPACITY - 6 WHEEL - 21.6
FRONT DOOR - 38 3/4
REAR DOOR - 32 5/8
FRONT SEAT ADJUSTABLE - 4" (REAR POSITION SHOWN)
CUSHION HEIGHT 12" OFF ℄ CAR - FRONT TO FLOOR - 14 1/4
CUSHION HEIGHT 12" OFF ℄ CAR - REAR TO CARPET - 14 1/2
152 1/4
88 3/4
61 5/8
61 3/4
34 5/8
53 1/4
69 7/8
30 3/4
TOP OF SILL
TOP OF FRAME
5 WHEEL
BOTTOM OF DOOR AT ℄ OF DOOR

CADILLAC SIXTEEN

5-TOURING SEDAN with Division

Style No. 9019-F—(Illustrated on Page 188)

Equipment and Appointments

Rear Quarters: Metal with quarter windows.

Front Seat: Entire front seat cushion and back rest adjustable 4". Seat cushion has ¾" rise. Seat frame integral with center body pillars.

Rear Seat: Seat cushion and seat back stationary.

Lighting: Dome light operated by rear doors and left rear pillar switch. Also corner lights, switch on right pillar.

Windows: Front door windows are equipped with individually controlled ventilator feature. Rear quarter window moves rearwardly 3½". Front ventipanes have inside locks; Security Plate Glass.

Interior Panels: Light burled walnut.

Trim: Ten Weise cloths in exclusive patterns; tan, gray or brown; tufted mode.

Smoking Equipment: Two ash receivers and two pass-around lighters located at front of rear compartment side arm rests; pass type lighter and ash tray in instrument control panel.

Division: Between front and rear compartments, no header board, modified side pillars, glass may be raised or lowered; operated by control handle on center of division.

Equipment: Two triangular shaped spring type foot hassocks, plush carpet covered to match floor carpet; assist straps on rear pillars, two assist handles at ends of robe cord; folding rear seat center arm rest; arm rests on each front door; slash pockets on inside each rear arm rest; two larger interior sun visors.

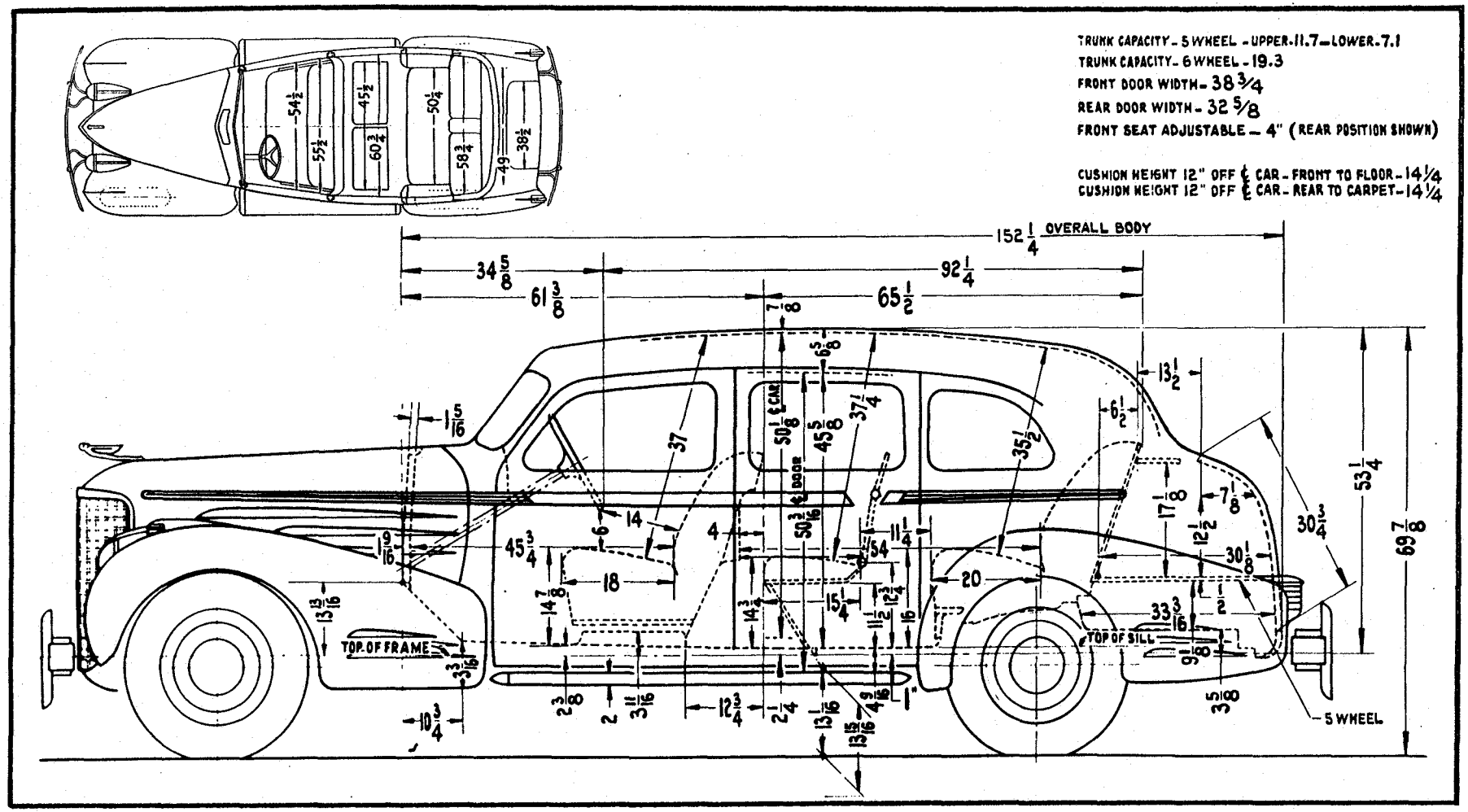
TRUNK CAPACITY - 5 WHEEL - UPPER-11.7 - LOWER-7.1
TRUNK CAPACITY - 6 WHEEL - 19.3
FRONT DOOR WIDTH - 38 3/4
REAR DOOR WIDTH - 32 5/8
FRONT SEAT ADJUSTABLE - 4" (REAR POSITION SHOWN)
CUSHION HEIGHT 12" OFF ℄ CAR - FRONT TO FLOOR - 14 1/4
CUSHION HEIGHT 12" OFF ℄ CAR - REAR TO CARPET - 14 1/4
152 1/4 OVERALL BODY
34 5/8
92 1/4
61 3/8
65 1/2
TOP OF FRAME
TOP OF SILL
5 WHEEL
69 7/8
53 1/4
30 3/4
45 3/4
37
35 1/2
37 1/4
50 1/8 ℄ CAR
50 3/16 ℄ DOOR
45 5/8
13 1/2
6 1/2
17 1/8
7 1/8
12 1/2
30 1/8
33 3/16
9 1/8
3 5/8
1 5/16
1 9/16
13 13/16
3 3/16
10 3/4
2 3/8
2
3 11/16
12 3/4
2 1/4
13 1/16
13 15/16
4 9/16
1"
14 7/8
14 3/4
15 1/4
11 1/2
12 3/4
16
11 1/4
54
20
18
14
6
4
37
6 5/8
7/8
54 1/2
45 1/2
50 1/4
60 3/4
58 3/4
38 1/2
49

CADILLAC SIXTEEN

7-TOURING SEDAN

Style No. 9023—(Illustrated on Page 190)

Equipment and Appointments

Rear Quarters: Metal with quarter windows.

Front Seat: Entire front seat cushion and back rest adjustable 4". Seat cushion has ¾" rise. Seat frame integral with center body pillars.

Rear Seat: Seat cushion and seat back stationary.

Lighting: Dome light operated by rear doors and left rear pillar switch; two rear corner lights operated by right rear pillar switch.

Windows: Front doors are equipped with individually controlled ventilation feature; rear quarter windows move rearwardly 3½". Front ventipanes have inside locks; Security Plate Glass.

Interior Panels: Light burled walnut.

Trim: Ten Weise cloths; tan, gray or brown; exclusive patterns; tufted mode.

Smoking Equipment: Two ash receivers and two pass-around lighters located at front of rear compartment side arm rests; pass type lighter and ash tray in instrument control panel.

Extra Seats: Two facing forward, luxuriously upholstered with Marshall springs; double throw backs, providing room for three passengers, form neat panel in seat back when not in use; no latches or zippers.

Equipment: Foot rest, oval shaped, double adjustable, rubber filled, plush carpet covered to match floor carpet; silk rear window curtain; two sliding arm slings; assist handles at both ends of robe cord; assist grips on rear quarter pillars; folding rear seat center arm rest; arm rest on each front door; slash pockets in side of each rear arm rest; two larger interior sun visors.

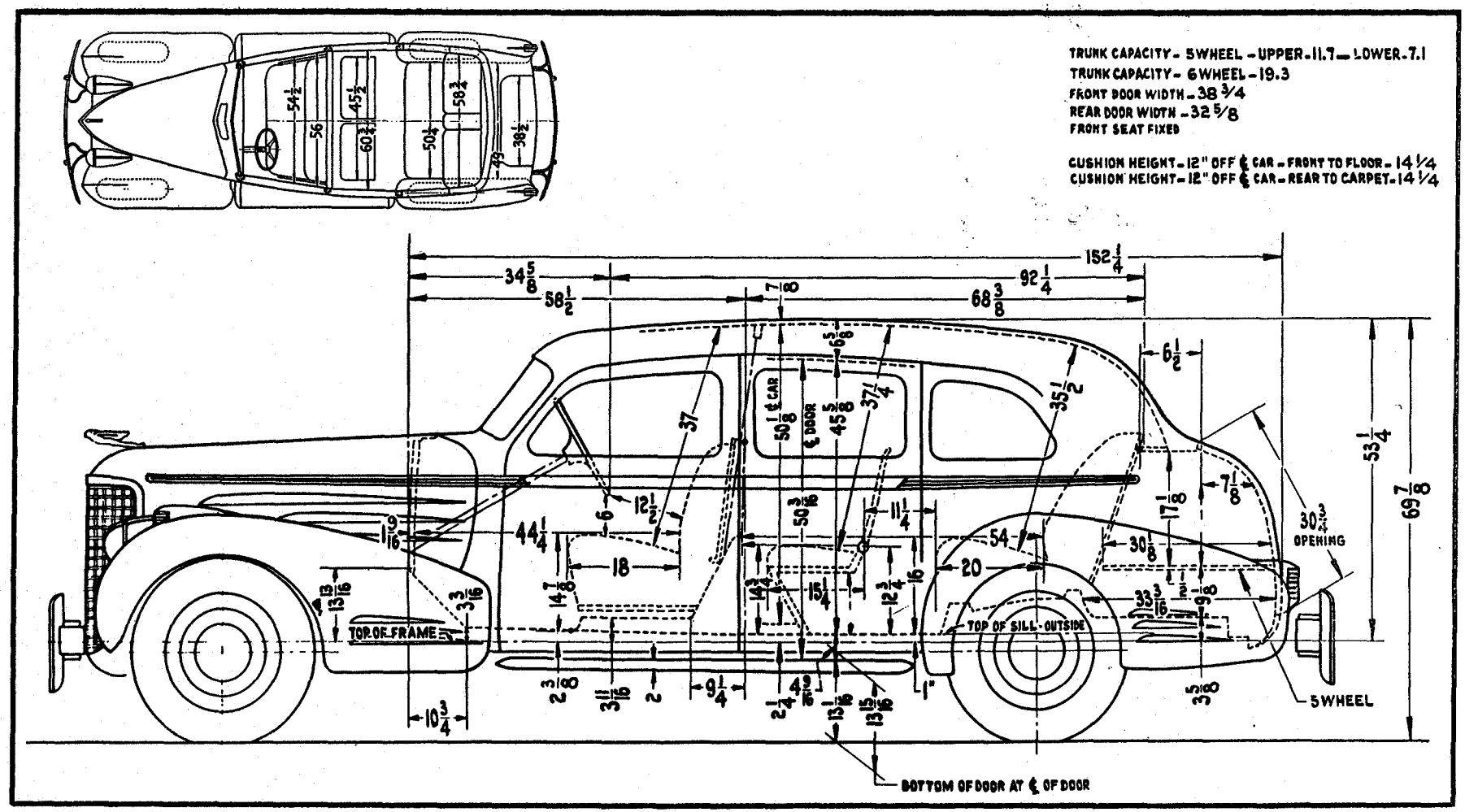
TRUNK CAPACITY - 5WHEEL - UPPER - 11.7 — LOWER - 7.1
TRUNK CAPACITY - 6WHEEL - 19.3
FRONT DOOR WIDTH - 38 3/4
REAR DOOR WIDTH - 32 5/8
FRONT SEAT FIXED
CUSHION HEIGHT - 12" OFF ℄ CAR - FRONT TO FLOOR - 14 1/4
CUSHION HEIGHT - 12" OFF ℄ CAR - REAR TO CARPET - 14 1/4
TOP OF FRAME
TOP OF SILL - OUTSIDE
30 3/4 OPENING
5WHEEL
BOTTOM OF DOOR AT ℄ OF DOOR

CADILLAC SIXTEEN

7-TOURING IMPERIAL

Style No. 9033—(Illustrated on Page 192)

Equipment and Appointments

Rear Quarters: Metal with quarter windows.

Front Seat: Stationary, seat back solid divided cushion.

Rear Seat: Seat cushion and seat back stationary.

Lighting: Dome light operated by rear doors and left rear pillar switch, two rear corner lights operated by right rear pillar switch, additional dome light in front compartment.

Windows: Front doors and rear quarter windows are equipped with individually controlled ventilation feature. Rear quarter windows move rearwardly 3½". Front ventipanes have inside locks; Security Plate Glass.

Interior Panels: Light burled walnut.

Trim: Front compartment in special black Down leather. Rear compartment in ten Weise cloths; tan, gray or brown; exclusive patterns; tufted mode.

Smoking Equipment: Two ash receivers and two pass-around lighters located at front of rear compartment side arm rests. Pass type lighter and ash receiver in instrument control panel recess.

Division: Division with header bar and side pillars. The glass may be raised and lowered between front and rear compartments; Security Plate Glass.

Telephone: New design "Motorphone" consists of detachable microphone, cord and integral push button assembly located in slash pocket on right hand rear quarter above arm rest.

Extra Seats: Two forward facing, luxuriously upholstered with Marshall Springs; double throw-backs; sufficient room for three passengers; concealed in front seat back when not in use; neat panel appearance; no latches or zippers.

Equipment: Foot rest, oval shaped, double adjustment sponge rubber filled, plush carpet covered to match floor carpet; two sliding arm slings; folding center arm rest in rear seat back, arm rest on each front door; assist grips on rear pillars; two assist handles at ends of robe cord; hand mirror carried in slash pocket left hand side; electric clock recessed in division center panel; two larger interior sun visors.

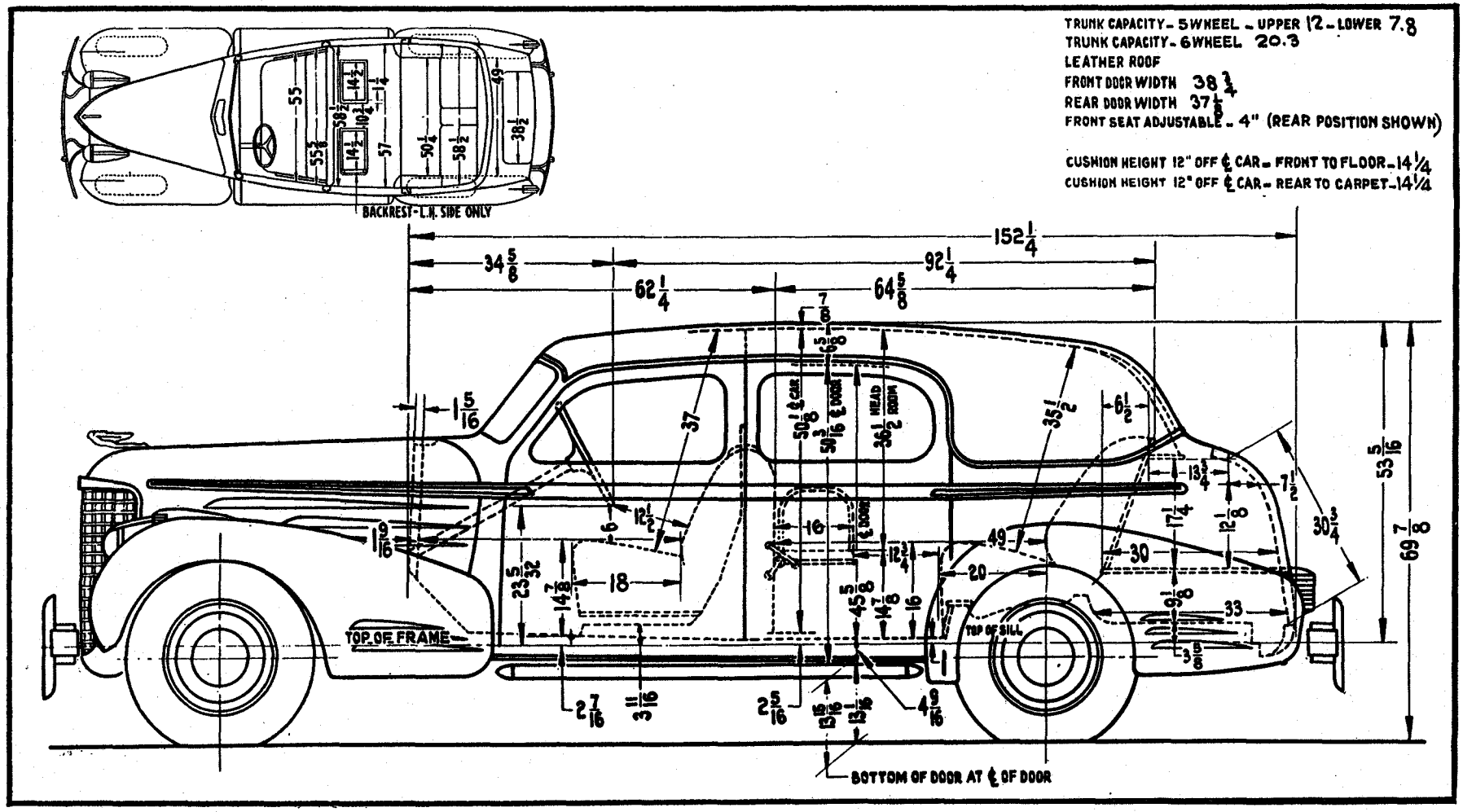
TRUNK CAPACITY - 5 WHEEL - UPPER 12 - LOWER 7.8
TRUNK CAPACITY - 6 WHEEL 20.3
LEATHER ROOF
FRONT DOOR WIDTH 38 3/4
REAR DOOR WIDTH 37 1/4
FRONT SEAT ADJUSTABLE - 4" (REAR POSITION SHOWN)
CUSHION HEIGHT 12" OFF ℄ CAR - FRONT TO FLOOR - 14 1/4
CUSHION HEIGHT 12" OFF ℄ CAR - REAR TO CARPET - 14 1/4
BACKREST - L.H. SIDE ONLY
152 1/4
92 1/4
64 5/8
62 1/4
34 5/8
HEAD ROOM
TOP OF FRAME
TOP OF SILL
BOTTOM OF DOOR AT ℄ OF DOOR

CADILLAC SIXTEEN

5-PASSENGER FORMAL SEDAN (Trunk)

Style No. 9059—(Illustrated on Page 194)

Equipment and Appointments

Roof and Rear Quarters: Genuine English Landau leather no quarter windows, not collapsible.

Front Seat: Stationary, upholstered in same material as rear compartment unless otherwise specified.

Rear Seat: Seat cushion and seat back stationary.

Lighting: Dome light operated by rear doors and left rear pillar switch; two rear corner lights operated by right rear pillar switch; additional dome light in front compartment.

Windows: Front and rear doors are equipped with individually controlled ventilation; front ventipanes have inside locks; Security Plate Glass.

Interior Panel: Light burled walnut.

Trim: Ten Weise cloths; tan, gray or brown; exclusive patterns; tufted mode.

Smoking Equipment: Concealed type cases containing ash receivers and pass-around lighters located in the rear quarters above side arm rest; pass type lighter and ash receiver in instrument control panel.

Division: Between front and rear compartments, no header board, modified side pillars, glass may be raised or lowered, operated by control handle on center of division.

Telephone: New design "Motorphone" consists of detachable microphone, cord and integral push button assembly located in slash pocket on right hand rear quarter above arm rest.

Extra Seats: Two opera type, left seat facing right side with lazy back, right seat facing rear, concealed in division when not in use. Neat panel appearance; no latches or zippers.

Equipment: Two triangular shaped spring type foot hassocks, plush carpet covered to match floor carpet; two sliding arm slings; grip handles installed on rear door hinge pillar; two assist handles at ends of robe cord; folding rear seat center arm rest; arm rests on each front door; hand mirror carried in slash pocket, left hand side; electric clock in front seat back; two larger interior sun visors.

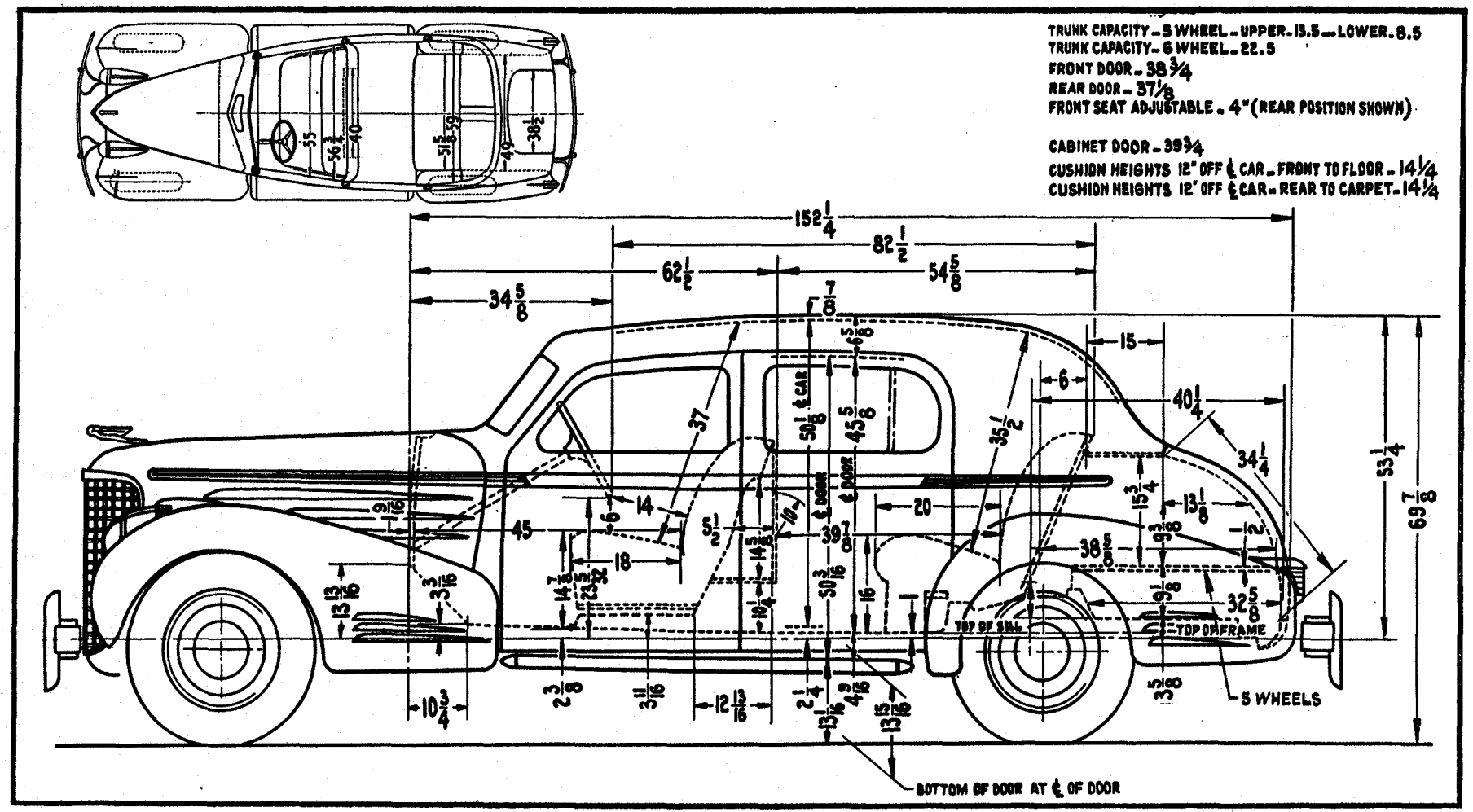
TRUNK CAPACITY - 5 WHEEL - UPPER - 13.5 - LOWER - 8.5
TRUNK CAPACITY - 6 WHEEL - 22.5
FRONT DOOR - 38 3/4
REAR DOOR - 37 1/8
FRONT SEAT ADJUSTABLE - 4" (REAR POSITION SHOWN)
CABINET DOOR - 39 3/4
CUSHION HEIGHTS 12" OFF ℄ CAR - FRONT TO FLOOR - 14 1/4
CUSHION HEIGHTS 12" OFF ℄ CAR - REAR TO CARPET - 14 1/4
152 1/4
82 1/2
62 1/2
54 5/8
34 5/8
7/8
15
6
40 1/4
34 1/4
53 1/4
69 7/8
37
35 1/2
50 1/8 ℄ CAR
45 5/8
℄ DOOR
℄ DOOR
20
14
45
18
5 1/2
39 7/8
38 5/8
32 5/8
13 1/8
15 3/4
TOP OF SILL
TOP OF FRAME
5 WHEELS
10 3/4
12 13/16
BOTTOM OF DOOR AT ℄ OF DOOR

CADILLAC SIXTEEN

7-PASSENGER FORMAL SEDAN (Trunk)

Style No. 9033-F—(Illustrated on Page 196)

Equipment and Appointments

Roof and Rear Quarters: Genuine English Landau leather, no quarter windows, not collapsible.

Front Seat: Stationary, seat back solid, divided cushion.

Rear Seat: Seat cushion and seat back stationary.

Lighting: Dome light operated by rear doors and left rear pillar switch; two rear corner lights operated by right rear pillar switch; additional dome light in front compartment.

Windows: Front and rear doors are equipped with individually controlled ventilation; front ventipanes have inside locks; Security Plate Glass.

Interior Panels: Light burled walnut.

Trim: Front compartment in special black Down Leather. Rear compartment in ten Weise cloths in exclusive patterns, tan, gray or brown, tufted mode.

Smoking Equipment: Concealed type cases containing ash receivers and pass-around lighters located in the rear quarters above side arm rests. Pass type lighter and ash receiver in instrument control panel.

Division: Division with header bar and side pillars. The glass may be raised and lowered between front and rear compartments; Security Plate Glass.

Telephone: New design "Motorphone" consists of detachable microphone, cord and integral push button assembly located in slash pocket on right hand rear quarter above arm rest.

Extra Seats: Two forward facing, luxuriously upholstered with Marshall springs; double throw-backs; sufficient room for three passengers; concealed in front seat back when not in use; neat panel appearance; no latches or zippers.

Equipment: Foot rest, oval shaped, double adjustment sponge rubber filled, plush carpet covered to match floor carpet; two sliding arm slings; assist grips on rear pillars; folding center arm rest in rear seat back; arm rest on each front door; two assist handles at ends of robe cord; hand mirror carried in slash pocket left hand side; electric clock recessed in front seat back; two larger interior sun visors.

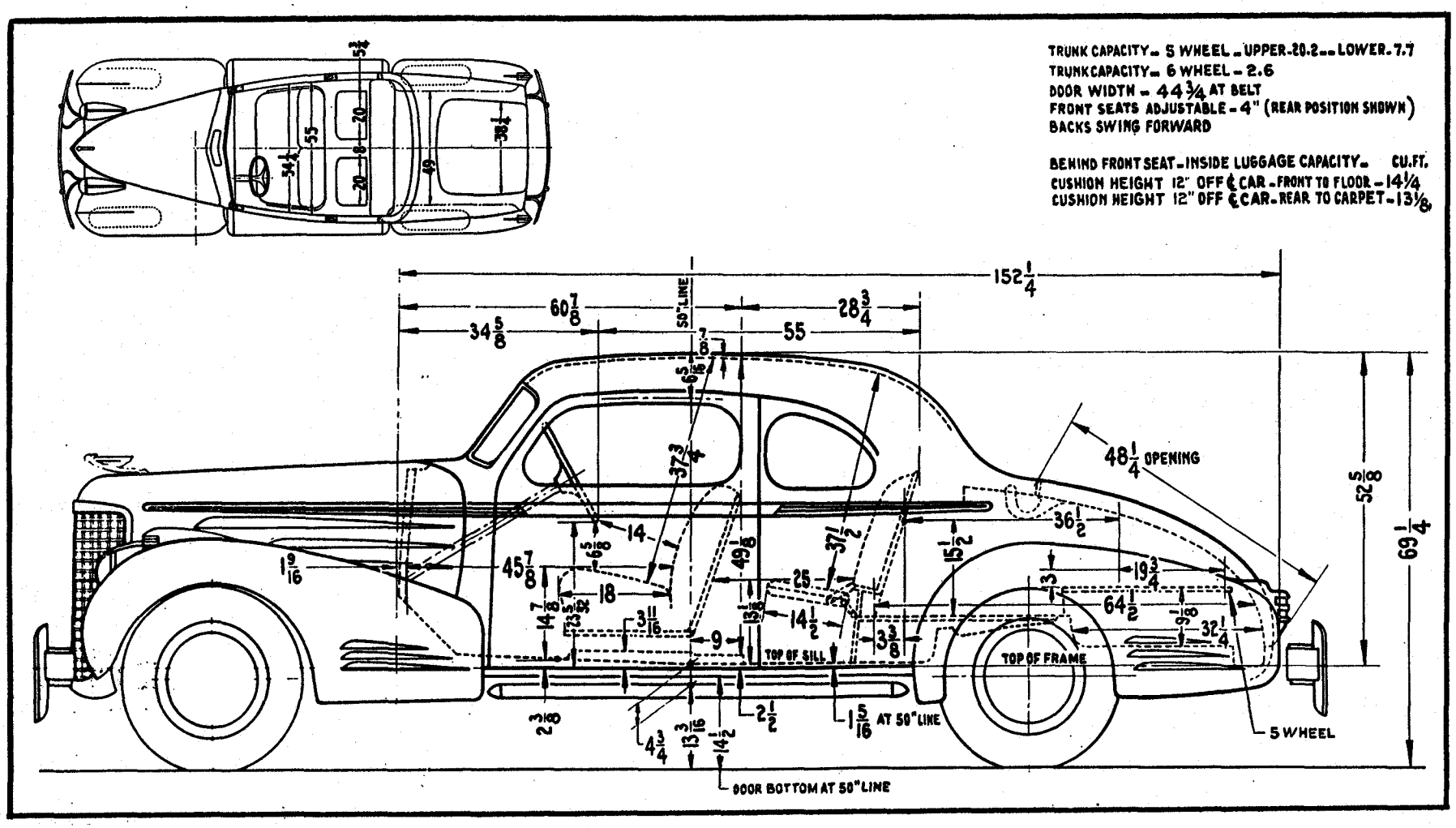
TRUNK CAPACITY - 5 WHEEL - UPPER-20.2 - LOWER-7.7
TRUNK CAPACITY - 6 WHEEL - 2.6
DOOR WIDTH - 44 3/4 AT BELT
FRONT SEATS ADJUSTABLE - 4" (REAR POSITION SHOWN)
BACKS SWING FORWARD
BEHIND FRONT SEAT - INSIDE LUGGAGE CAPACITY - CU.FT.
CUSHION HEIGHT 12" OFF ℄ CAR - FRONT TO FLOOR - 14 1/4
CUSHION HEIGHT 12" OFF ℄ CAR - REAR TO CARPET - 13 1/8
152 1/4
60 7/8
34 5/8
28 3/4
55
50" LINE
48 1/4 OPENING
52 5/8
69 1/4
TOP OF SILL
TOP OF FRAME
1 5/16 AT 50" LINE
DOOR BOTTOM AT 50" LINE
5 WHEEL

CADILLAC SIXTEEN

2-PASSENGER COUPE

Style No. 9057—(Illustrated on Page 198)

Equipment and Appointments

Rear Quarter: Metal with quarter windows.

Front Seat: Straight across with seat fully adjustable 4″ with ¾″ rise, back only divided; seat backs swing forward allowing access to opera seats or luggage compartment as desired.

Opera Seats: Located behind front seat, facing forward, fold when not in use.

Interior Panels: Light burled walnut.

Trim: Ten Weise cloths; tan, gray or brown; exclusive patterns; tufted mode.

Smoking Equipment: Pass-around cigar lighter and ash tray in instrument control panel. Ash trays also in both rear side quarters.

Lighting: Dome light controlled by both doors and right hand pillar switch.

Windows: Doors equipped with individually controlled ventilation feature. Rear quarter window slides rearwardly. Front ventipanes have inside locks; Security Plate Glass.

Equipment: Side arm rest on doors; silk curtain on back window; two larger interior sun visors, fully adjustable; assist grips on right and left pillars; robe cords on each side of divided front seat back; recessed foot rest; large luggage compartment below rear deck.

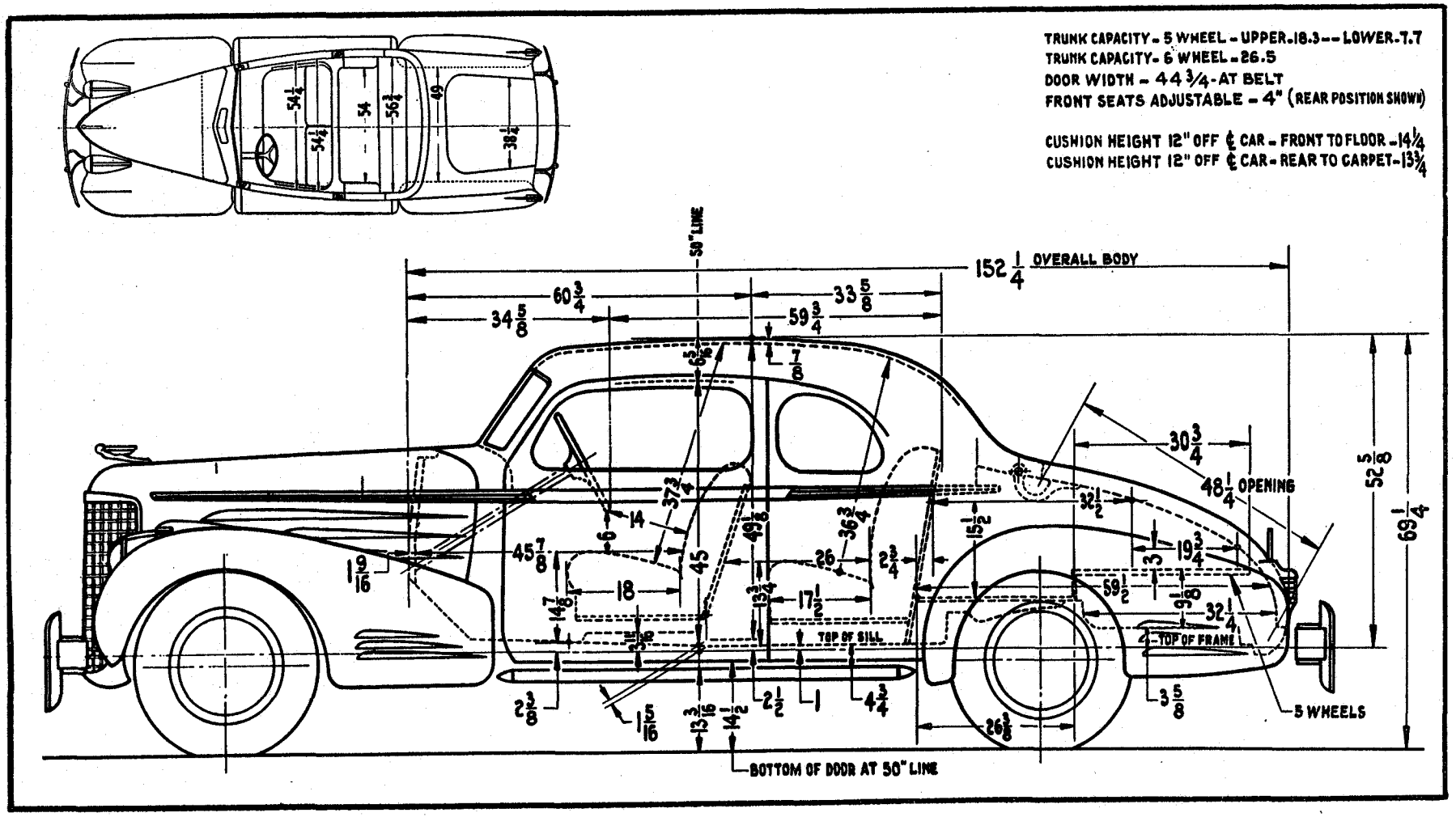
TRUNK CAPACITY - 5 WHEEL - UPPER-18.3 -- LOWER-7.7
TRUNK CAPACITY - 6 WHEEL - 26.5
DOOR WIDTH - 44 3/4 - AT BELT
FRONT SEATS ADJUSTABLE - 4" (REAR POSITION SHOWN)
CUSHION HEIGHT 12" OFF ℄ CAR - FRONT TO FLOOR - 14 1/4
CUSHION HEIGHT 12" OFF ℄ CAR - REAR TO CARPET - 13 3/4
50" LINE
152 1/4 OVERALL BODY
60 3/4
33 5/8
34 5/8
59 3/4
30 3/4
48 1/4 OPENING
52 5/8
69 1/4
TOP OF SILL
TOP OF FRAME
5 WHEELS
BOTTOM OF DOOR AT 50" LINE

CADILLAC SIXTEEN

5-PASSENGER COUPE

Style No. 9029—(Illustrated on Page 200)

Equipment and Appointments

Rear Quarter: Metal with quarter windows.

Front Seat: Straight across with seat fully adjustable 4″ with ¾″ rise, back only divided; seat backs swing forward allowing access to rear seat.

Rear Seat: Full across behind front seat, stationary.

Interior Panels: Light burled walnut.

Trim: Ten Weise cloths; tan, gray or brown; exclusive patterns; tufted mode.

Smoking Equipment: Pass-around cigar lighter and ash receiver located in instrument control panel; ash receiver forward of both rear seat arm rests.

Lighting: Dome light operated by rear doors and right rear pillar switch.

Windows: Doors equipped with individually controlled ventilation feature; front ventipanes have inside locks; Security Plate Glass.

Equipment: Side arm rest on doors; silk curtain on back window; two larger interior sun visors, fully adjustable; assist grips on right and left pillars; slash pockets in side arm rests; robe cords on each side of divided front seat back; recessed foot rest; large luggage compartment below rear deck.

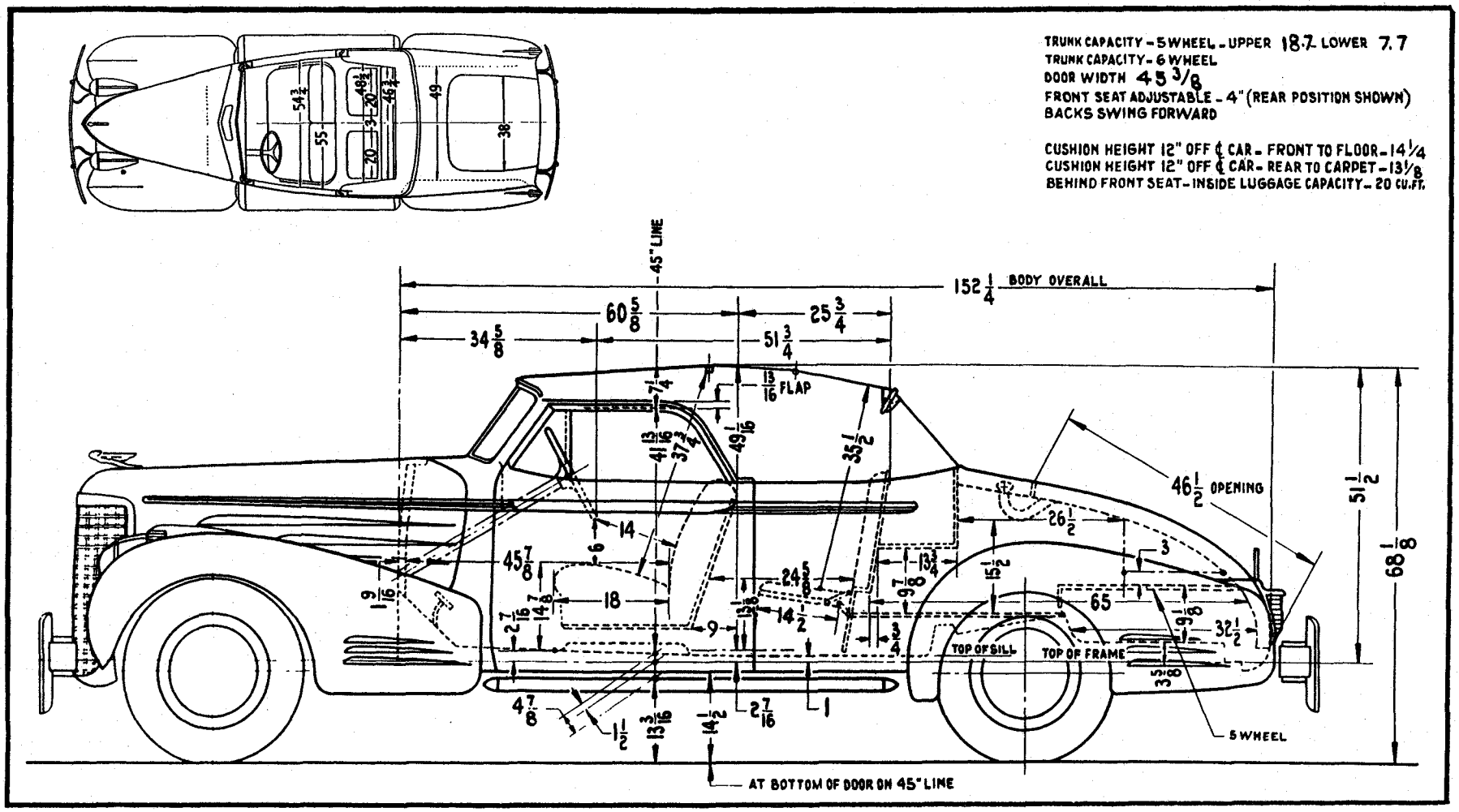
TRUNK CAPACITY - 5 WHEEL - UPPER 18.7 LOWER 7.7
TRUNK CAPACITY - 6 WHEEL
DOOR WIDTH 45 3/8
FRONT SEAT ADJUSTABLE - 4" (REAR POSITION SHOWN)
BACKS SWING FORWARD
CUSHION HEIGHT 12" OFF ℄ CAR - FRONT TO FLOOR - 14 1/4
CUSHION HEIGHT 12" OFF ℄ CAR - REAR TO CARPET - 13 1/8
BEHIND FRONT SEAT - INSIDE LUGGAGE CAPACITY - 20 CU. FT.
45" LINE
152 1/4 BODY OVERALL
60 5/8
25 3/4
34 5/8
51 3/4
13/16 FLAP
46 1/2 OPENING
26 1/2
51 1/2
68 1/8
45 7/8
24 5/8
18
14 1/2
65
32 1/2
TOP OF SILL
TOP OF FRAME
5 WHEEL
AT BOTTOM OF DOOR ON 45" LINE

CADILLAC SIXTEEN

CONVERTIBLE COUPE

Style No. 9067—(Illustrated on Page 202)

Equipment and Appointments

Top and Rear Quarters: Burbank fully collapsible, folding into special compartment fully concealed.

Front Seat: Straight across with seat fully adjustable 4" with ¾" rise on seat cushion, back only divided, seat backs swing forward allowing access to opera seats.

Opera Seats: Two, directly behind front seat, facing forward, folded when not in use.

Smoking Equipment: Pass around cigar lighter and ash receiver located in instrument control panel; ash receiver on both rear side quarters.

Interior Panels: Light burled walnut.

Trim: Options of black, tan, gray, green or blue genuine cowhide; tan or gray Bedford Cords.

Windows: Doors are equipped with individually controlled ventilation feature. All windows Security Plate Glass.

Equipment: Side arm rests on doors; two larger interior dual purpose sun shades, adjustable; robe cords on each side of divided front seat back; recessed foot rest; large luggage compartment under rear deck; dust boot for top when folded.

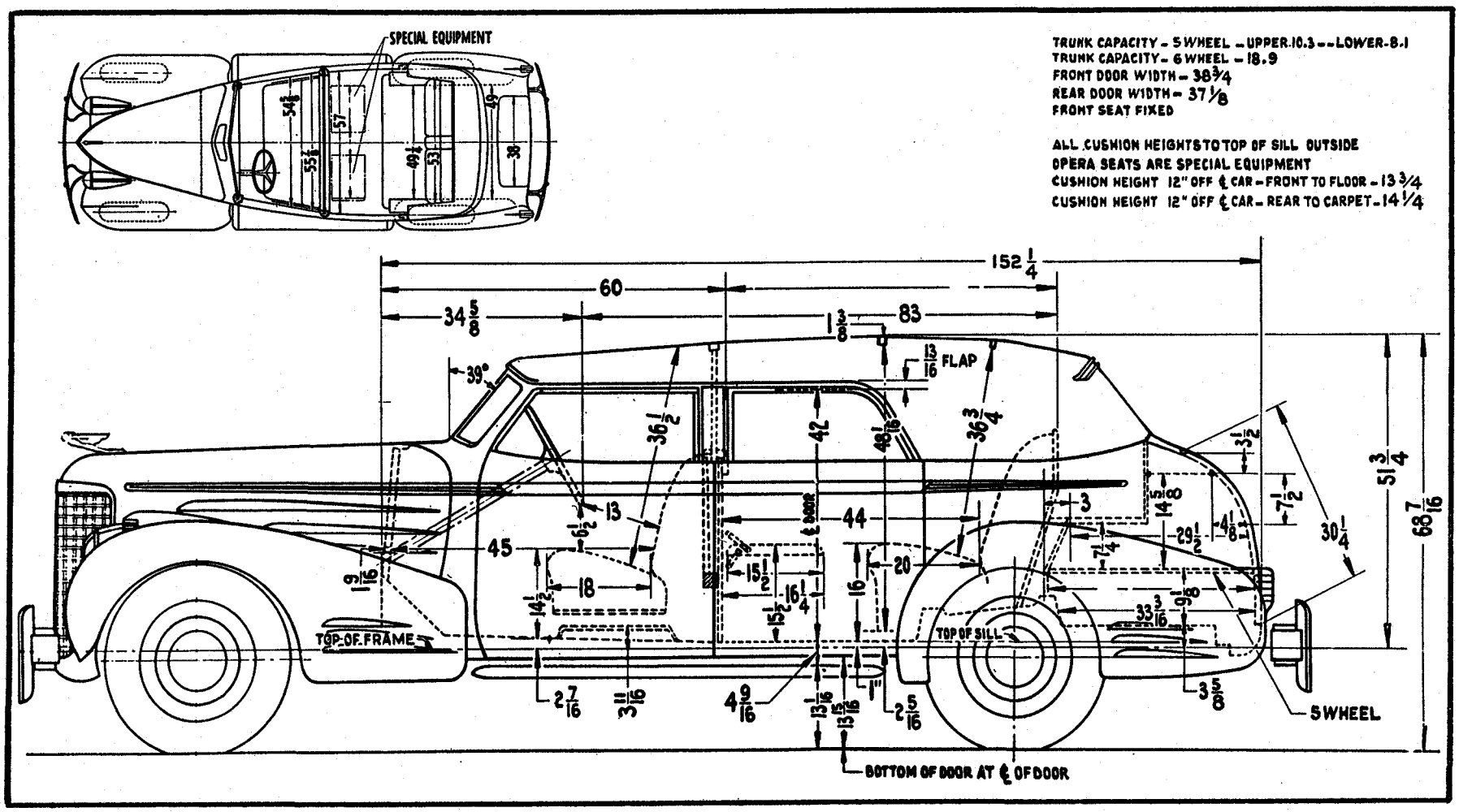
SPECIAL EQUIPMENT
TRUNK CAPACITY - 5 WHEEL - UPPER 10.3 - - LOWER - 8.1
TRUNK CAPACITY - 6 WHEEL - 18.9
FRONT DOOR WIDTH - 38 3/4
REAR DOOR WIDTH - 37 1/8
FRONT SEAT FIXED
ALL CUSHION HEIGHTS TO TOP OF SILL OUTSIDE
OPERA SEATS ARE SPECIAL EQUIPMENT
CUSHION HEIGHT 12" OFF ℄ CAR - FRONT TO FLOOR - 13 3/4
CUSHION HEIGHT 12" OFF ℄ CAR - REAR TO CARPET - 14 1/4
152 1/4
60
34 5/8
83
1 3/8
13/16 FLAP
39°
36 1/2
42
48 1/16
36 3/4
3 1/2
51 3/4
68 7/16
7 1/2
30 1/4
14 5/16
29 1/2
4 1/8
7 1/4
3
44
45
13
6 1/2
1 9/16
18
14 1/2
15 1/2
16 1/4
16
20
33 3/16
9 1/8
TOP OF FRAME
TOP OF SILL
2 7/16
3 11/16
4 9/16
13/16
15/16
1"
2 5/16
3 5/8
5 WHEEL
BOTTOM OF DOOR AT ℄ OF DOOR

CADILLAC SIXTEEN

CONVERTIBLE SEDAN (Trunk)

Style No. 9057-B—(Illustrated on Page 204)

Equipment and Appointments

Top and Rear Quarters: Burbank fully collapsible folding into special compartment fully concealed.

Front Seat: Stationary.

Rear Seat: Seat cushion and seat back stationary.

Interior Panels: Light burled walnut.

Trim: Tan, gray, green, blue or black genuine cowhide leathers; tan or gray Bedford Cord.

Lighting: Courtesy lights recessed in front of rear compartment side arm rests, operated by switches on right and left pillars and switch on right rear arm rest.

Windows: Front doors are equipped with individually controlled ventilation feature. All windows Security Plate Glass.

Smoking Equipment: Two pass-around lighters recessed in front of ash receivers, located in front of rear side arm rests. Pass type lighter and ash receiver in instrument control panel recess.

Equipment: Two triangular shaped spring type foot hassocks, plush carpet covered to match floor carpet; two larger interior dual purpose sun shades, adjustable; folding center arm rest in rear seat back; arm rest on each front door; leather robe cord; electric tonneau clock; dust boot for top when folded.

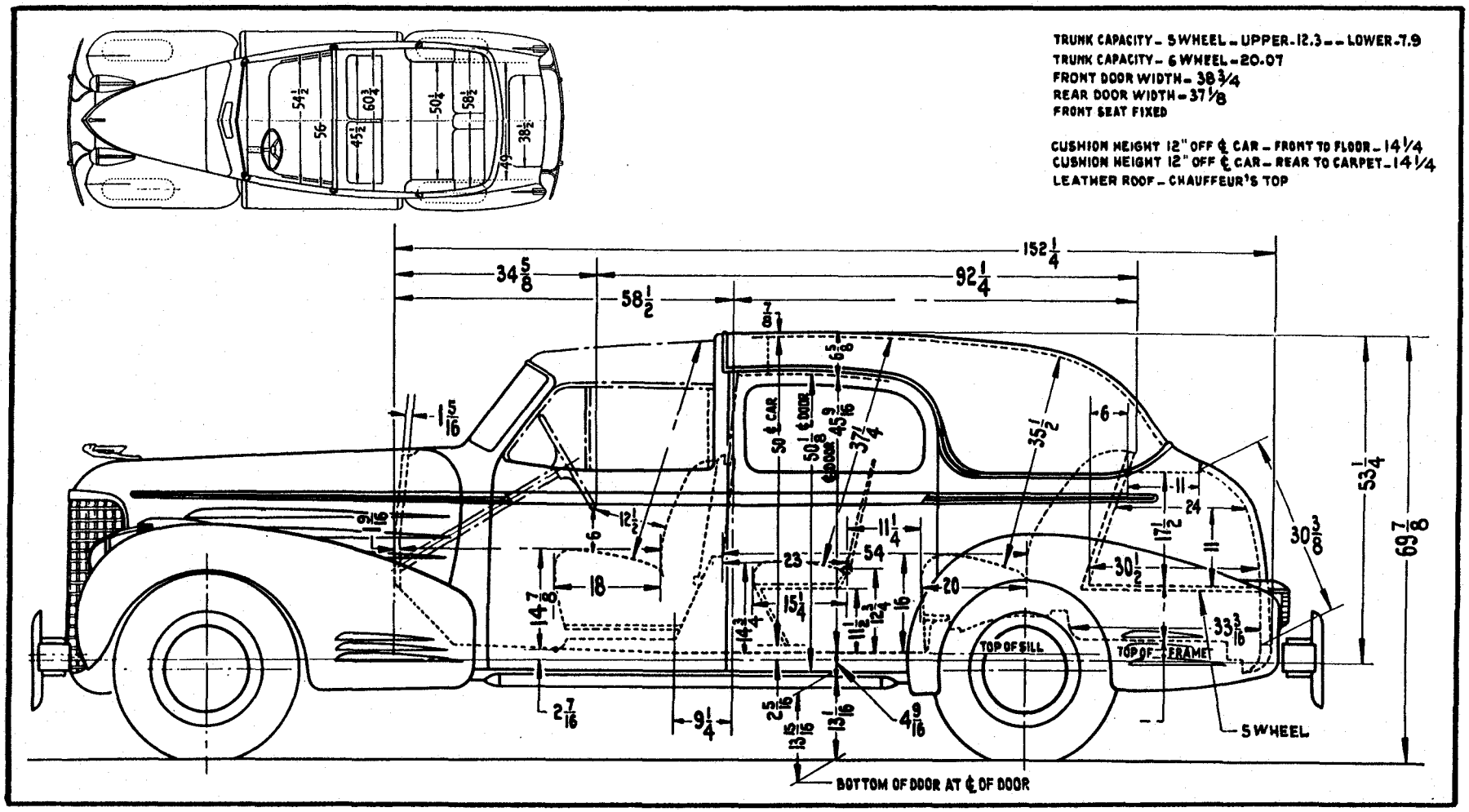
TRUNK CAPACITY - 5 WHEEL - UPPER - 12.3 - - LOWER - 7.9
TRUNK CAPACITY - 6 WHEEL - 20.07
FRONT DOOR WIDTH - 38 3/4
REAR DOOR WIDTH - 37 1/8
FRONT SEAT FIXED
CUSHION HEIGHT 12" OFF ℄ CAR - FRONT TO FLOOR - 14 1/4
CUSHION HEIGHT 12" OFF ℄ CAR - REAR TO CARPET - 14 1/4
LEATHER ROOF - CHAUFFEUR'S TOP
TOP OF SILL
TOP OF FRAME
5 WHEEL
BOTTOM OF DOOR AT ℄ OF DOOR

CADILLAC SIXTEEN

TOWN CAR (Trunk)

Style No. 9053—(Illustrated on Page 206)

Equipment and Appointments

Roof and Rear Quarters: Genuine English Landau leather, no quarter windows, not collapsible. Front compartment has removable roof.

Front Seat: Stationary, seat back solid.

Rear Seat: Seat cushion and back stationary.

Lighting: Dome light operated by rear doors and left rear pillar switch; two rear corner lights, right rear pillar switch.

Windows: All Security Plate Glass. All equipped with I. C. V.

Interior Panels: Light burled walnut.

Trim: Front compartment in genuine Black Down Leather; rear compartment in ten exclusive Weise cloth patterns; tan, gray or brown, tufted mode.

Smoking Equipment: Concealed type cases containing ash receivers and pass-around lighters located above side arm rests; pass type lighter and ash receiver in instrument control panel recess.

Division: With header board and side pillars; glass may be raised and lowered between front and rear compartments. Security Plate Glass.

Telephone: New design "Motorphone", detachable microphone, cord and integral push button assembly located in slash pocket on right hand rear quarter above arm rest.

Extra Seats: Two facing forward, luxuriously upholstered with Marshall springs, double throw backs, providing room for three passengers, concealed when not in use; neat panel appearance; no latches or zippers.

Equipment: Two triangular shaped spring type foot hassocks, plush carpet covered to match floor carpet; two sliding arm slings; grip handles located on right and left hand rear pillars; assist handles on both ends of robe cord; folding center arm rest in rear seat back; arm rest on each front door; hand mirror carried in slash pocket, left hand side; electric clock recessed in division center panel; two larger interior sun visors.

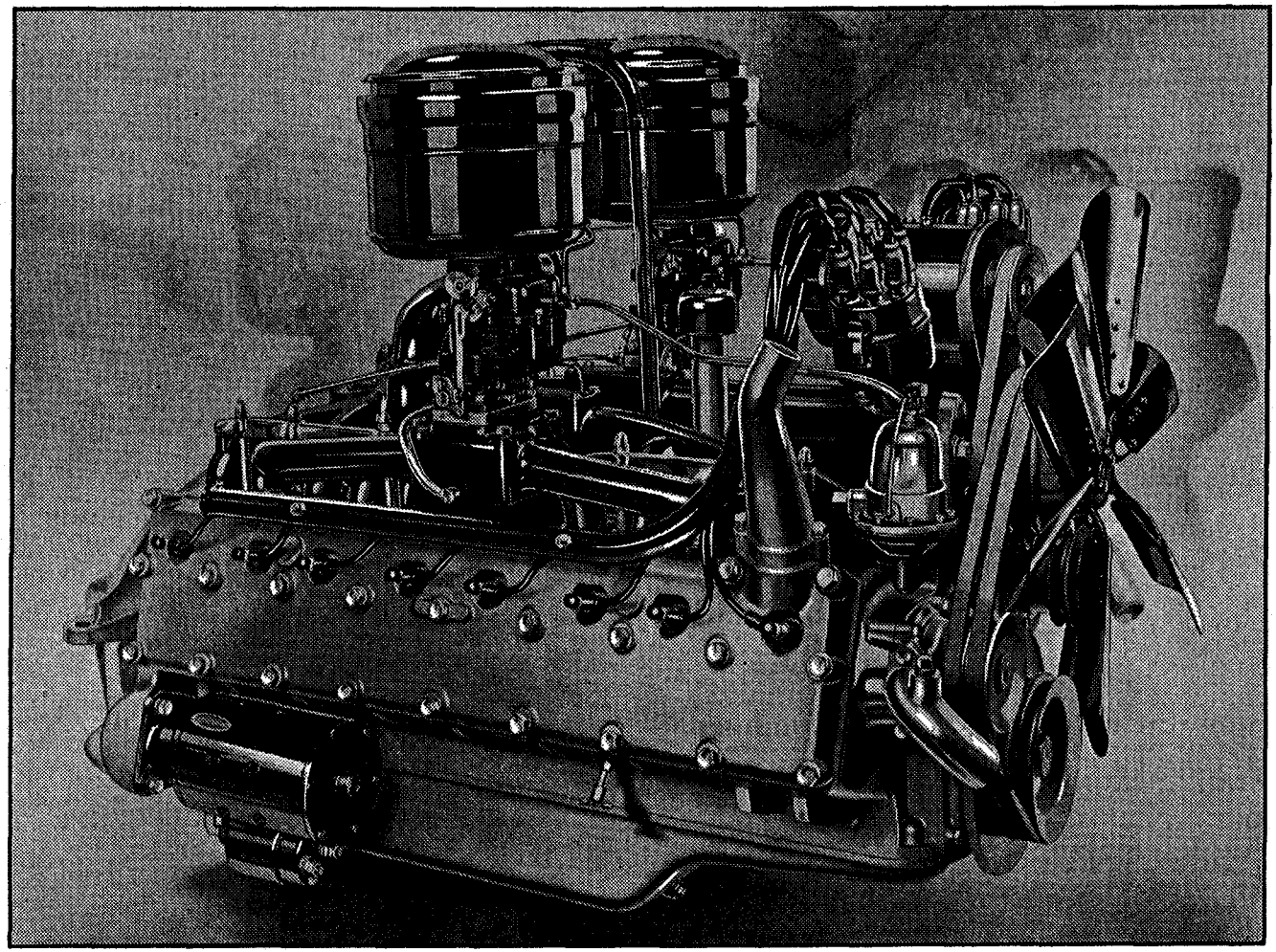

Sixteen-Cylinder 135° V-type Engine

SIXTEEN CYLINDER ENGINE

The 135° V-type Cadillac sixteen cylinder engine is the result of several years' development by Cadillac engineers for the purpose of making sixteen cylinder smoothness and performance available to a great many more motorists. To accomplish this purpose, a power plant has been designed in which sixteen cylinders totaling 431 cubic inches displacement require less hood length than is required for V-12 engines. Also, the Sixteen engine, although much larger, is actually lighter than any large V-12. Unusual compactness, economical service and extreme durability have been realized by the combination of a very short stroke, a V-angle of 135 degrees and an enbloc casting of cylinder banks and crankcase. Other unique features of design are the disposition of dual engine accessories; two dual downdraft carburetors, two manifold systems, two distributors, two coils, two fuel pumps, two water pumps, two fan belts. Each bank of eight cylinders is in running balance, hence the new Sixteen engine will operate more smoothly on one bank of cylinders than most eight cylinder automobiles. The bore is 3¼ inches, the stroke 3¼ inches.

In performance, smoothness and quietness of operation the Cadillac Sixteen excels all pleasure cars by a wide margin. A Sixteen cylinder engine is inherently smoother, quieter and more powerful than engines having a lesser number of cylinders. Since Cadillac is the only pleasure car builder of Sixteens in the world today, the supremacy of these Cadillac Sixteen features is indisputable. Now, with prices in the range of all twelves, the Cadillac Sixteen is above logical comparison with any other motor car.

Advantages of Sixteen Cylinders

Sixteen cylinders have been chosen for the world's most luxurious motor car because of the many advantages inherent in such a design.

Smoothness: This engine is the smoothest in automotive use in the world today because its sixteen small cylinders give explosive impulses every 45 degrees of crankshaft revolution and generate an almost continuous flow of power. This is V-type design as near perfection as only Cadillac could build.

A graphic comparison of the low speed torque impulses (engine fluctuation due to power generated with each engine revolution) of the Cadillac Sixteen with

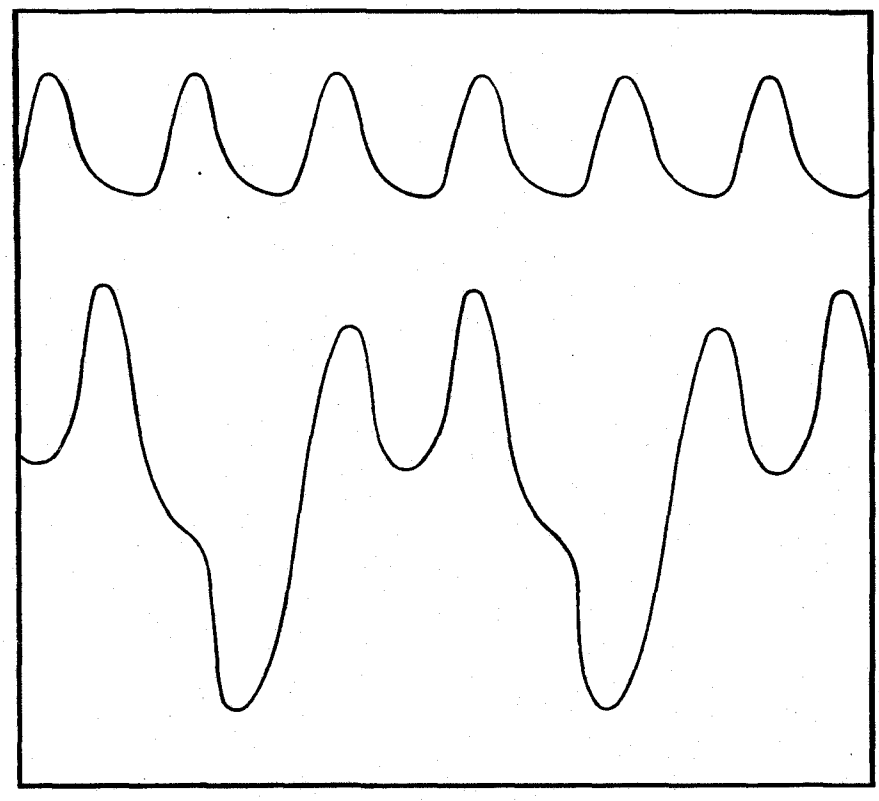

(Above) Sixteen Torque Curve
(Below) Typical 12 Torque Curve

those of a typical twelve cylinder engine of approximately the same size shows a harmonious flowing curve for the Sixteen and an irregular, impulsive curve

for the twelve. Furthermore, as the speed increases, the Sixteen fluctuations become smaller while the V-12 fluctuations increase. The twelve cylinder vibration curve variations reach a maximum when coasting at high speed, whereas the Sixteen torque variations become zero, represented by a straight line, under these conditions.

Durability: Because the displacement of each cylinder of a sixteen cylinder engine may be smaller, the very short stroke of 3¼ inches is possible. This engine has the lowest piston travel of any American made automobile. This is in conformance with Cadillac practice of large engines of tremendous reserve power yet always operating slowly, thereby achieving longer engine life and operating economy. Piston travel of the Sixteen engine is 1590 feet per mile: for a typical twelve, 2270; for LaSalle and Cadillac "61", 2080.

The short stroke reduces the inertia forces of the reciprocating pistons. Connecting rod bearing loads are thus reduced, thereby increasing durability. The short stroke contributes still further to connecting rod bearing life because shorter and lighter rods may be used. With the short stroke and light impulses two inch diameter crankpins afford extreme rigidity and reduce rod bearing friction.

Small bore engines wear less than large bore engines having the same piston travel. The use of sixteen cylinders makes it possible to use a relatively small piston despite the very short stroke.

Performance: Sixteen cylinders permit large displacement for a given hood length. Furthermore, the small cylinders permit the use of the high 6.75 to 1 compression ratio which increases combustion efficiency, resulting in greater power development relative to engine size and increasing fuel economy. The Sixteen engine develops 185 horsepower.

In addition to this high power output the Sixteen is much lighter than cars of similar size. Much dead weight has been eliminated. Performance is, therefore, far better than any automobile heretofore built by Cadillac, better in fact than any passenger car ever built in this country. Maximum speed is above one hundred miles per hour.

Advantages of 135 Degree V Angle

Smoothness: The 135 degree angle between cylinder blocks gives uniformly spaced power impulses. Uniform spacing of the impulses increases smoothness. The irregularities of the V-12 curve illustrated on a previous page are due to unequal spacing of the explosive forces, as determined by the V angle. The V angle also influences torque fluctuations due to the inertia forces of the reciprocating pistons. In the 135° Sixteen the torque fluctuations from this source are zero. In a V-12 with a V angle of other than 60 degrees (there

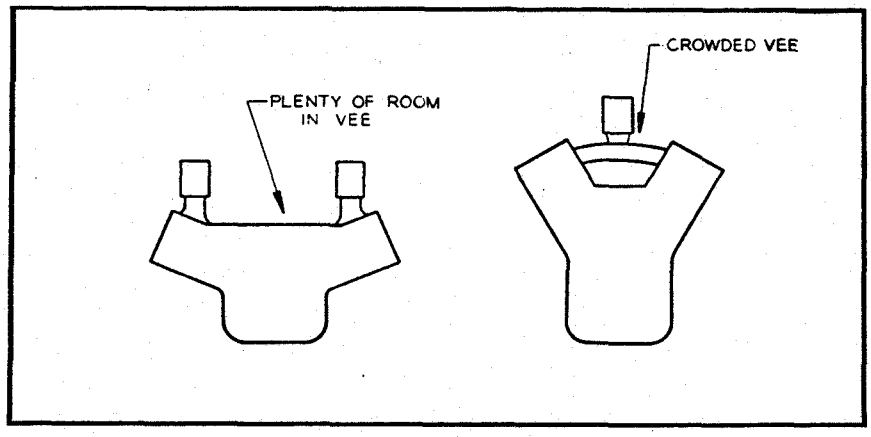

New Sixteen *Typical Twelve*

are no 60 degree V-12's because such an angle gives an impractically crowded V) the inertia forces increase with speed, causing torque fluctuations to increase also at higher speeds and to be very pronounced on acceleration.

Service Accessibility: The wide V angle permits easy servicing of intake and exhaust systems and of the valve gear. All dual accessories, such as carburetors, distributors, fuel pumps, are conveniently arranged. Pistons and connecting rods may be removed from above.

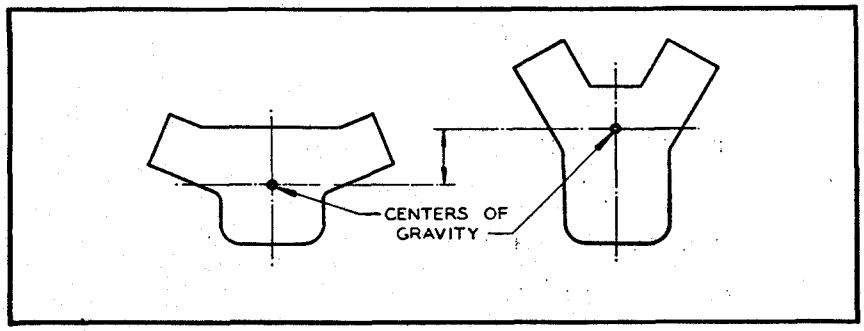

New Sixteen *Typical Twelve*

Low Center of Gravity: The 135 degree angle materially lowers the weight center of the entire engine assembly, increasing high speed driving stability.

More Efficient Cooling: The conventional V-type engine masks almost the entire area of the cooling fan. This is avoided on Cadillac and LaSalle V-8's by placing these short engines well in the rear of the fan. On a longer V-12 it is impossible to avoid reduction of fan efficiency. On the Sixteen, however, half of the

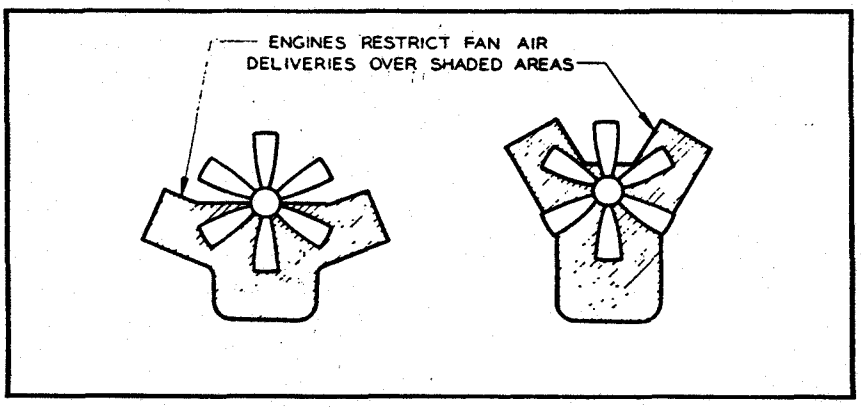

New Sixteen *Typical Twelve*

complete fan diameter is entirely unblocked and the upper portion of the radiator is unrestricted.

SIXTEEN ENGINE CONSTRUCTION

Enbloc Design

The extremely compact Sixteen engine permits spacious bodies on the 141 inch wheelbase. Bodies are larger in all dimensions than those on many cars of longer wheelbase. The compact engine is largely due to one-piece unit design.

It is a great tribute to Cadillac's foundry practice that sixteen cylinders with long water jackets, side valves and ports and a nine bearing crankcase can be successfully produced in a single casting. The Cadillac and LaSalle V-8's have proved that the greater rigidity of enbloc design increases smoothness and that service maintenance is reduced because of the fewer number of joint surfaces subject to leakage or gasket troubles.

The enbloc engine is an important factor in weight reduction. The 431 cubic inch Sixteen is lighter than V-12 engines even when aluminum crankcases are used.

Crankcase and Cylinder Block

In general, the crankcase and cylinder block design follows the principles long proven satisfactory on the Cadillac V-8. The crankcase and the two eight-cylinder blocks are cast as a single unit from hard alloy steel and iron. Included angle between the cylinder bore axes is 135 degrees. The crankcase casting has seven ribbed bulkheads which increase rigidity and which, with their front and rear crankcase walls, support the nine main bearings. Since the camshaft is supported on five bearings, these are placed in alternate bulkheads.

Cylinder heads are cast of the same material as the block in accordance with Cadillac practice. Combustion chambers are machined all over to avoid variations in compression pressure between the cylinders.

The L-head combustion chambers and side valves were chosen as most suitable to the compact design. Because of the wide V angle there is ample room for

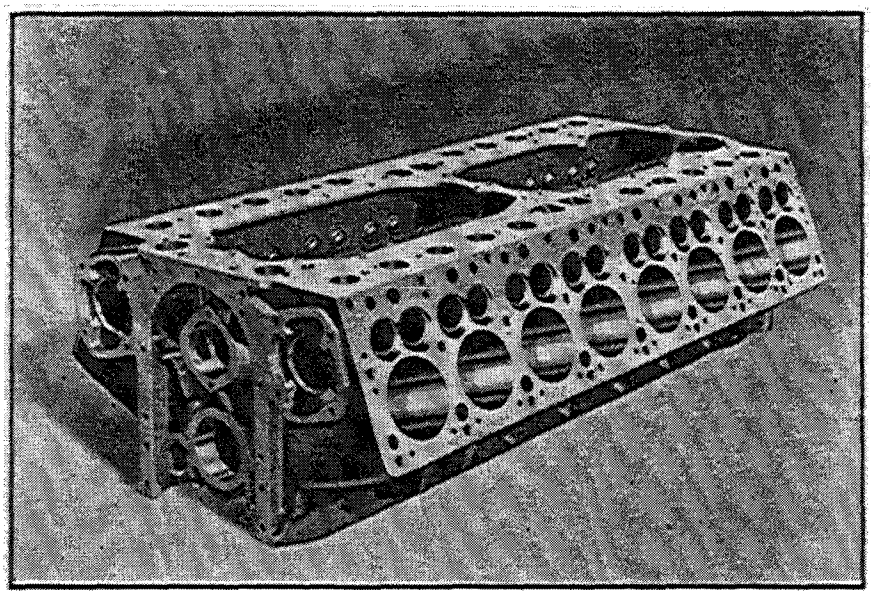

Enbloc Cylinder and Crankcase

the side valve mechanism. The excessive engine width which would be required by the greater cylinder head depth of the valve-in-head design is avoided.

Engine Mounting

The engine is supported at five points by live rubber mounts. There are two supports at the sides in front,

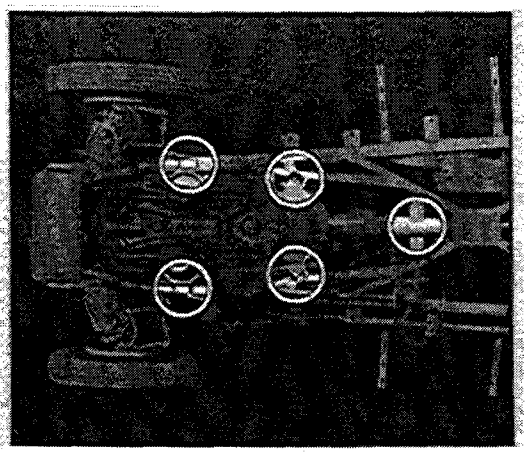

Location of 5-Point Engine Mountings

two intermediate supports and a rear support on the transmission extension. The engine is, therefore, al-

lowed to rock freely within a limited distance, while at the same time engine weight is utilized to reinforce front frame arms for refined roadability.

Crankshaft and Flywheel

Rigidity and smoothness are assured by the nine bearing counterweighted crankshaft. It is a high carbon steel forging carrying eight integral counterweights. Each of

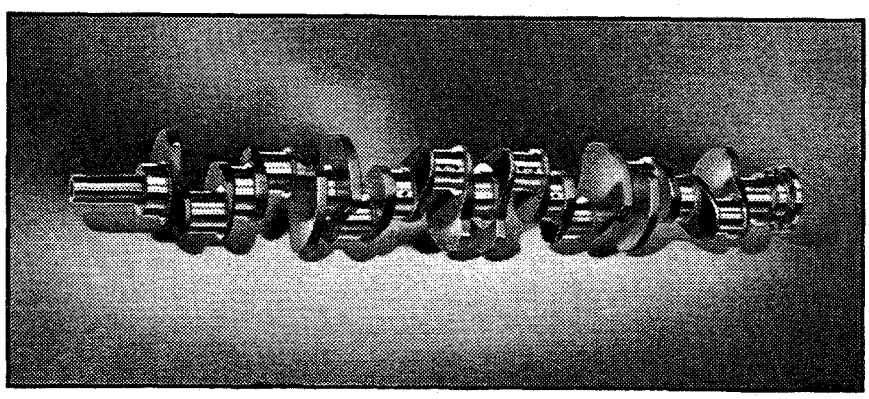

Nine Bearing Crankshaft

the eight two-inch diameter crankpins carries two side-by-side connecting rods. The nine main bearing journals are 2½ inches in diameter.

The nine main bearings assure resistance to bending forces while the two-inch crankpins and 2½ inch journals are amply rigid against torsional vibration, or twisting forces, because of the light power impulses of the small cylinders and the small inertia forces due to the short stroke. The short stroke also permits the main bearing journals and crankpins to overlap by ⅝ of an inch which adds further to rigidity.

A rubber torsional vibration dampener is included in the belt pulley assembly at the front of the engine and is added solely as a refinement.

Because of the short stroke, the many small cylinders and the rigid crankshaft, the Syncro-Flex flywheel, as used on Cadillac V-8, is unnecessary.

Piston and connecting rod assembly has been specially designed for the Sixteen. The wrist pin is locked in the rod and rotates in the piston. A lock screw in the small end of the rod passes through a notch in the wrist pin, thus holding the pin against the rotation of the rod. This design makes it unnecessary to rifle drill connecting rods. Two grooves inside each wrist pin bearing

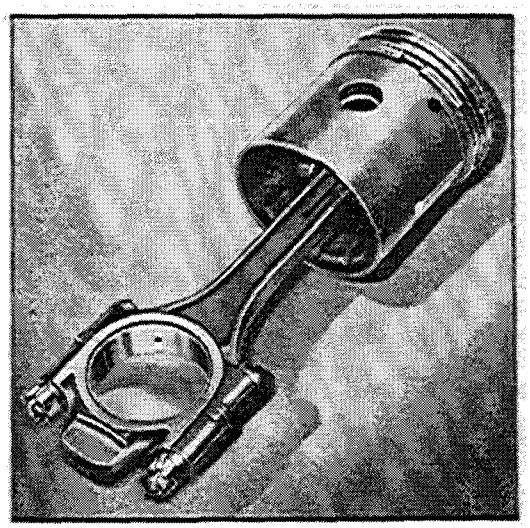

Piston and Short Connecting Rod

and running the full length of the pin distribute oil collected from the cylinder wall to the wrist pin bearing.

Because of the short stroke, the connecting rod length is only 6 3/8 inches. Nevertheless, a ratio of rod length to stroke of almost 2 to 1 is maintained. The short, light manganese steel rods materially reduce bearing loads. Use of two-inch crank pins permit the withdrawal of the rods and pistons from above without the necessity of angle-split connecting rod bearings. Removable steel backed babbitt bearings are used.

The light low expansion aluminum alloy pistons employ the T-slot principle and the anodized finish which has proved so successful in Cadillacs for several years.

Each piston has two compression rings and one oil ring. Because of the extremely low piston travel of the

Sixteen engine, wear is many times less than other engines, hence more than one oil ring is unnecessary.

A *new piston ring surface treatment further increases cylinder bore durability and oil economy*. All rings are *ferrox* treated. This is an abrasion resisting material which greatly reduces wear.

Valve Gear

The camshaft, which is supported upon five bearings, is mounted in the center of the V directly above the crankshaft, and is driven by a silent chain at the front of the engine. The cams operate mushroom type tappets which also embody hydraulic valve silencers of the same type used in the Cadillac V-8's. The tappets in turn operate the valves which have single springs. High speed operation without valve clatter is assured by the light weight valves. The complete mechanism, except the camshaft, is enclosed by two removable valve chamber covers placed across the top of the engine V alley.

Valve tappet bodies and *tappet plungers* are also *ferrox treated* to decrease the possibility of tappet base and camshaft scoring.

LUBRICATION SYSTEM

Engine lubrication follows the Cadillac practice of positively forcing oil to all points, many of which in other engines are oil starved because of reliance upon crankcase oil mist.

Oil is drawn from the pan by a float type intake which stays on the surface of the oil, thus assuring a clean supply. From the intake, oil passes to the helical gear pump which contains a by-pass type of piston oil pressure regulator valve within its housing and is located at the oil level at the rear of the engine. The pump is driven by an upwardly extending vertical shaft having

a gear at its top meshing with a cross-drive gear integral with the camshaft.

From the oil pump oil passes to a longitudinal header within the crankcase and running its full length. Drilled passages connecting with the header and passing through each of the engine bulkheads supply the main bearings from which passages in the crankshaft lead lubricant to the connecting rod bearings. The camshaft bearings are lubricated by passages which connect

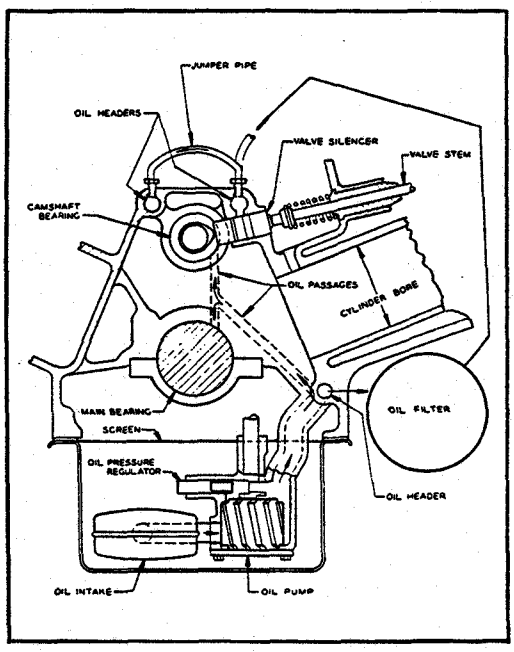

Sixteen Engine Lubrication

with the previously mentioned main bearing supply passages. The oil pump driveshaft bearing, the two distributor driveshafts and their eccentrics for driving the two fuel pumps are positively lubricated by additional passages connecting with the main bearing supplies. The timing chain and sprocket are lubricated by oil which has passed through the front camshaft bearing; oil from the front camshaft bearing collects in a cavity within the camshaft sprocket from which centrifugal force throws it through a number of radially drilled holes, lubricating the chain.

From the main oil header in the side of the crankcase

a pipe leads the oil to the oil filter, thence to two longitudinal headers on either side of the camshaft. Oil from each of these headers passes to the hydraulic valve silencers, lubricating them and providing the pressure necessary for the automatic valve lash adjusting action.

The oil filler is in the center of the front valve chamber cover just behind the generator, and thus is accessible from either side of the engine. A float oil level indicator in the rear of the V gives a continuous reading of the oil quantity. The oil pan capacity is eleven quarts.

Crankcase Ventilation

The Sixteen employs an engine suction type of crankcase ventilation system which is for this large engine the most efficient ventilating system yet designed.

There is a filter-protected air inlet through the oil filler cap in the center of the front valve chamber cover. This inlet pipe passes downward through the valve chamber and connects with the crankcase. The pipe is sealed at the crankcase so that all air passes into the crankcase.

Two large pipes connect each of the two air cleaners with the front and rear valve chambers respectively. A conical spring at the bottom of each pipe prevents exhaust gases from being blown into the crankcase.

A third pipe leads from the crankcase through the rear valve chamber and up through the valve chamber cover. Above the cover this pipe connects with the vacuum line leading from the vacuum pump to the intake manifold.

The ventilating system operates in two distinct manners. At low speeds or part throttle operation, air enters the crankcase through a number of holes from three points, through both of the two pipes between the air cleaners and valve chamber covers and through the

filter protected oil filler pipe. After the ventilating air has mixed with the crankcase oil mist, absorbing water and fuel vapors, a substantial vacuum draws it out through the intake manifold.

At high speeds or with throttle open, intake vacuum decreases but there is a rapid rush of air through the carburetor air cleaners. This creates a suction in the two pipes connecting them to the valve covers. Air enters the oil filler as before, passes directly to the crankcase, but the outward flow is reversed, the air and impurities going into the valve compartments. The air is then drawn upward into the air cleaners.

The system is simple and reliable in operation and insures an adequate ventilation of the crankcase under all conditions that is not equalled by any other method.

FUEL SYSTEM

From the 26.5 gallon tank fuel is drawn forward through a single pipe placed in a cool position on the outside of the right hand frame sidebar. Near the front of the frame this pipe branches, one lead passing to the right hand fuel pump and one crossing in front of the front frame crossmember to the left hand pump. This arrangement assures a cool gasoline feed to both pumps thus reducing vapor lock tendencies. The two fuel pumps have integral filters and are of the link driven flexible diaphragm type; the links engage push rods operated in turn by eccentrics on the distributor drive-shafts. From the right hand fuel pump a pipe leads to the right hand dual downdraft carburetor while the left hand pump similarly supplies fuel to the left hand carburetor. The two lines are interconnected, however, so either pump may supply both carburetors.

There are two heavy duty oil bath air cleaners of cylindrical shape, each mounted directly above its

corresponding carburetor. Dual downdraft carburetors have 1⅛ inch throats and climatic control. From each of the two carburetors the fuel mixture passes downward to an exhaust heated division chamber thence to the four legs of each of the dual cast iron intake manifolds, which are designed so that no two successively firing

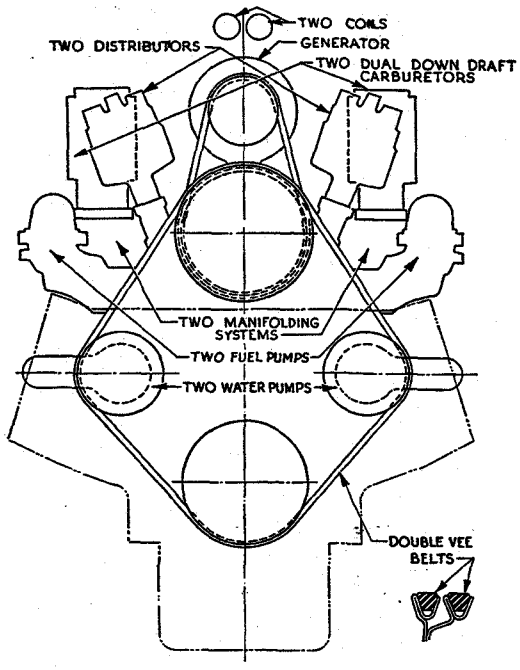

Dual Engine Accessories

cylinders of a bank draw from the same manifold leg. All intake ports are siamesed. The exhaust ports are single, the two center ports of each cylinder block connecting directly to that portion of the exhaust manifold which heats the intake manifold division chamber. The two exhaust manifolds discharge into a cross pipe placed just behind the carburetors. This pipe conducts the exhaust to the left side of the engine from which the exhaust system leads it downward and to the rear.

The exhaust pipe leads backward along the left side of the chassis to a *new, extra durable, corrosion resisting muffler* mounted transversely behind the gasoline tank. To keep heat away from the body interiors, the pipe is outside the frame side bar for most of its length.

COOLING SYSTEM

The Sixteen engine has two independent water circulating systems, there being one for each bank of eight cylinders.

The illustration on the previous page shows the general arrangement of the water pump and fan belt drive. Two parallel V-belts driven by double pulleys at the front end of the crankshaft encircle the two water pump pulleys at the sides of the engine and the fan drive pulleys at the top. The double belts obviously have materially longer life than a single belt.

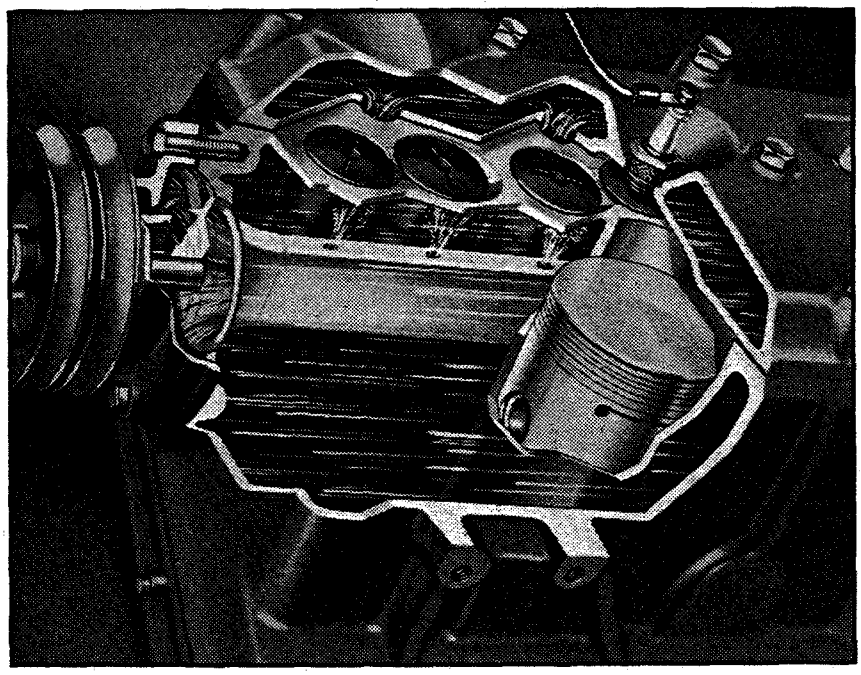

Positively Cooled Valves and Full Length Water Jackets

Each of two outlets at the base of the radiator is connected to one of two centrifugal water pumps mounted in the front ends of both cylinder blocks. The pumps employ permanent carbon block water pump packing. The pump impellers are held on very hard

steel shafts by a press fit. With dual belt drive the former shear pin construction is unnecessary.

From each pump water is forced directly backward through tubes extending the full length of each cylinder block. These tubes direct sprays of water forcibly around the valves, and also assure correct distribution of the water throughout the entire lengths of the blocks. Full length water jackets assure uniformity of cylinder wall temperature and reduce oil temperature. These long water jackets also increase the quantity of cooling water which increases heat absorbing capacity. From the cylinder blocks the cooling water passes upward into the cylinder heads, and then forward to the outlets at the front of the engine.

Maximum radiator cooling efficiency is attained by a copper cellular core. The core has wide passages to prevent clogging and is only 3½ inches in thickness. This reduces air restriction and thus reduces underhood temperatures.

A seven bladed fan having symmetrically spaced blades delivers exceptionally large volumes of air, yet is unusually quiet.

Thermostatically operated radiator shutters are provided. The thermostat is in the rear of the radiator top tank which improves service accessibility and protects the thermostat from cold air blasts which might otherwise cause irregular operation. The bayonet type of pressure valve filler cap is used.

ELECTRICAL SYSTEM

A large 21 plate 164 ampere hour battery is used in the Sixteen. It is mounted under the right side of the front seat.

The battery is maintained at full capacity by an improved Peak Load Generator. Both voltage regula-

tion and current control features are provided which insure a constant rate of proper charge throughout the car's speed range, depending upon battery condition and the number of electrical accessories in use. Generator charging ability has been increased by four amperes this year.

The Sixteen *generator has a new belt drive* which simplifies servicing. The generator is now mounted high above the engine V directly behind the fan.

The solenoid operated starter is of the six pole type and is operated directly instead of through reduction gearing as in the past.

Ignition System

The Sixteen electrical system is most unusual in that two distributors are used. The left distributor makes and breaks the current for the two iron clad coils and both cylinder blocks and distributes high tension current to the left hand block. The right hand unit distributes high tension current for the right block only. As viewed from above, the left hand distributor rotates clockwise while the right hand distributor rotates counter-clockwise. The two coils are mounted above the distributors on the radiator thermostat housing. The coils are held together by a die-cast base into which the coil lock passes. High tension ignition wiring from the distributors to the 10 mm. spark plugs is concealed and protected by metal conduits.

Circuit Breaker

The entire electrical system is protected against short circuits by a thermostatic circuit breaker. This breaker operates from heat generated by any current overload. After breaking the circuit and as soon as the system cools to normal temperature, it closes again, making the electrical system complete.

CLUTCH

The clutch is of 11½ inch single dry plate semi-centrifugal design. It is larger in size and capacity, but basically *similar in the new design* of the Cadillac V-8 clutch. No spring dampeners are required, however, because of the smooth flow of power from the sixteen cylinder engine.

TRANSMISSION

There is one transmission described in the V-8 Engine Section for all models. This new transmission has been designed and built specifically to meet the Sixteen requirements of durability and ease of operation.

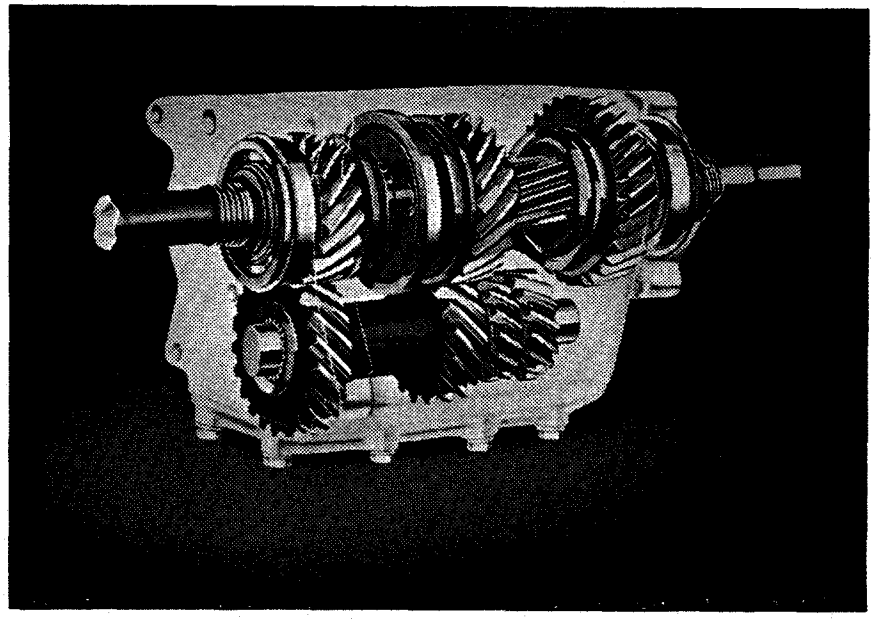

Improved Cadillac Syncro-Mesh Transmission

A *new transmission interlock* positively prevents engagement of more than one gear at a time even under abnormal conditions. Much smoother, easier shifting is attained.

Syncromatic Shift, which eliminates all obstructions in the front compartment and is operated in the same manual manner as the conventional system is employed on the Sixteen.

Shifting ease has been further improved by a much shorter throw between gears.

SIXTEEN CHASSIS

To complement its sensational 135° sixteen cylinder engine, the Sixteen chassis has been designed for utmost comfort and dependability. Wheelbase is 141 inches,

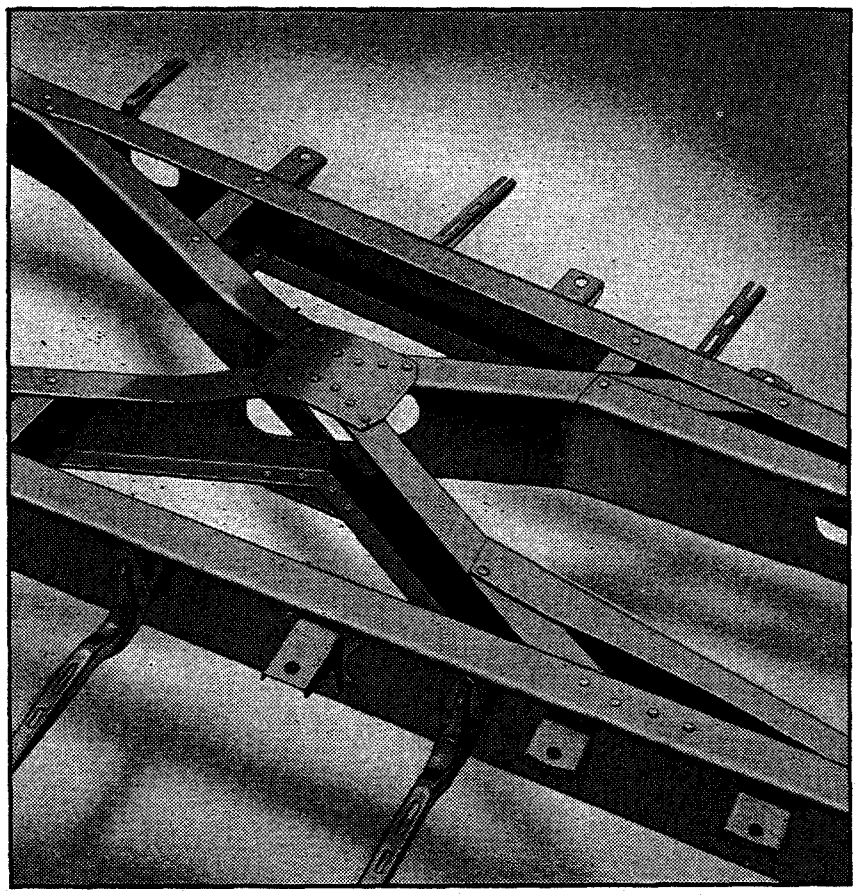

Rigid Frame Bracing and Deep Center Junction

an important factor in according the Sixteen with the greatest maneuverability ever accomplished in such a powerful motor car.

Refinements for 1939 include new rear shock absorbers which *increase riding softness* and improved rear axle construction which further *increases durability*.

Frame

The Sixteen frame is unexcelled in strength and rigidity. Both X-members and side bars are of deep channel construction. Reinforcements extend forward from each of the X-members and make a box section with the sidebar and are carried far back, thus strengthening the junction of the X-members and frame sidebars. An exceedingly great depth of $9\frac{7}{16}$ inches is realized at the central junction of the X-members, an additional factor in extraordinary frame rigidity. Heavy steel plates reinforce the junction at the top and bottom.

The Cadillac front end construction with sidebars extending through the massive cross member at the front of the frame is continued.

Knee Action and Rear Spring Suspension

Cadillac-designed Knee Action, which assures a flat high speed ride and soft boulevard ride and constantly

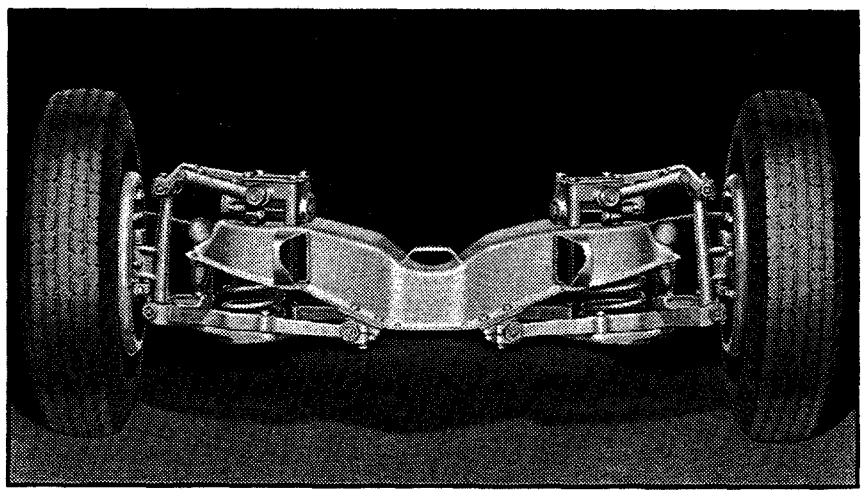

Sixteen Knee Action

accurate steering geometry, is used on the Sixteen. Identical as to principle with the smaller Cadillacs,

structural parts are heavier to meet the necessarily greater strength requirement.

Rear springs are semi-elliptic in design and have the exceptionally great length of 62 inches. Waxed liners are used between the spring leaves. This exclusive Cadillac feature provides the simplest and most positive control of rear suspension friction yet designed. These liners do not require lubricant, yet prevent squeaks. With liners it has been found that spring covers are detrimental because they act as dirt collectors, consequently no covers are used.

Two-piece rubber bushings are used in the front of the rear spring and in the upper shackle bearing. The lower shackle bearing is threaded. The shackles are of the sturdy double bar design. This method of mounting the springs at each end gives increased riding comfort, quiet operation and eliminates lubrication problems.

Center Point Steering

That easy and quick turning ability in confined areas and steering accuracy for safe handling at high speeds is obtainable in as large and heavy a car as the Sixteen is a great engineering accomplishment. This is due to Cadillac-designed Center Point Steering in conjunction with Knee Action.

In cars using the conventional front axle there is an inherent tendency toward wander and pulling from side to side, particularly when braking. This is because the axle rolls forward under braking load. When striking a bump the conventional axle never moves in quite the precise curve to give correct steering geometry. This causes steering wheel whip.

In the Sixteen geometrical relationship of the various parts of the steering system is accurately controlled at all speeds. Each front wheel is directly connected to

the frame by rigid forged forked arms which accurately control wheel motion. The upper forked arm is shorter than the lower by a sufficient amount to maintain constant tread regardless of spring deflection. Constant tread prevents sidewise scrubbing of the tire upon the road's surface.

The two steering cross rods are of the same length and parallel to the lower forked arms which avoids errors in steering geometry. They are joined and controlled at the center by a longitudinal drag link. A roller shaft extends from the drag link through the frame sidebar and is straddle mounted on the steering gear housing. The steering gear is of the sturdy worm and double roller design. Two extremely strong universal joints which contribute to handling ease are used in the steering column.

Shock Absorbers

Cadillac's exclusive end-to-end discharge type shock absorbers are used on the Sixteen. This is the finest and most costly shock absorber equipment available and provides a degree of luxurious comfort over any kind of road that has never been equalled.

Three point manual adjustment is provided to give a soft, medium, or firm ride in accordance with the owner's preference.

The front shock absorbers are attached to the upper forked arms of the Knee Action assembly and control compression and rebound action of the helical coil springs. *New rear shock absorbers* with improved valving give a softer Sixteen ride.

Double Ride Stabilizers

A cross link rear stabilizer is used on the Sixteen. This stabilizer is effective in reducing body roll and also

provides rear axle control reducing body shake on choppy road surfaces.

The front stabilizer is of rigid torsion shaft construction and is mounted behind the Knee Action arms. This stabilizer insures handling stability at high speeds on curves or steeply crowned roads.

Hydraulic Brakes

Self-energizing hydraulic brakes are used on the Sixteen because these give the finest combination of positive braking action, free from the need of frequent adjustment, longer brake lining life and ease of operation. Moulded linings with a total of 258 square inches area are used for durability. Drums are of expensive composite design and are ribbed for cooling.

Braking ratio is 57% front and 43% rear.

Hotchkiss Drive

The Hotchkiss type of drive is particularly suited to Sixteen chassis requirements because of its long wheelbase and weight. This type of drive contributes to riding qualities by reducing unsprung weight and by cushioning starting and stopping strains from the rear axle through the rear springs before they reach the frame. Rear axle action over rough roads is restrained because the wheels follow road irregularities freely.

The Sixteen propeller shaft has undergone much research to assure accurate propeller shaft and universal joint balance for improved high speed smoothness.

There are two needle bearing universal joints which are permanently packed with lubricant.

Hypoid Rear Axle and Differential

The hypoid rear axle designed for the Sixteen incorporates the most advanced engineering with structural durability features exclusive to Cadillac precision manufacture. The basic principles follow those which proved so satisfactory in the past. *A new compressible steel spacer automatically positions the two pinion bearings*, thus maintaining the correct amount of inner race end loading at all times. The former shim adjustment is eliminated.

The semi-floating axle is unusually strong for its weight. A cylindrical differential housing which encircles tapered roller differential bearings is carried within a heavily ribbed carrier. The axle cover is welded into position to increase housing rigidity. Bronze thrust bearings are used between the two differential pinions and the housing. The ring gear diameter is eleven inches.

All gears are carefully ground, finished by Cadillac's famous lapping process, and matched individually by hand into sets. Each axle housing is manufactured for its own particular set of gears.

The phenomenal performance of the Sixteen is partially due to a carefully selected 4.31 to 1 rear axle ratio. This also accounts for the exceptionally low piston travel of the sixteen cylinder engine.

SERVICE AS A SALES AID

The high standards of Authorized Cadillac-LaSalle Service provide an effective sales story for car salesmen. Authorized Service also contributes definite sales assistance by fostering good will and by maintaining customer interest in Cadillac between new car purchases.

The sales story on Cadillac-LaSalle service includes the following important points that should be thoroughly understood by every Cadillac salesman:

A WRITTEN SERVICE POLICY—The responsibilities of both the owner and the service station are clearly outlined on a Certificate which is presented to the owner when he takes delivery of a new Cadillac or LaSalle.

FREE INSPECTIONS—The owner is entitled to have his car tested and inspected without charge at any time by any Authorized Service Station, provided no dismantling of parts is required.

TOURIST PRIVILEGES—The owner is furnished with an identification card which entitles him to warranty service at any Authorized Cadillac distributor or dealer anywhere in the United States or Canada.

UNIFORM PRICES ON PARTS—The List Prices published in the Parts Book hold good anywhere in the United States.

FAIR MAINTENANCE CHARGES—The Standard Service Price Schedule giving flat rate charges for repairs is open to inspection by owners at any Authorized Service Station.

THE SERVICE POLICY CERTIFICATE which is given to the owner may be summed up in brief, as a sincere attempt by the Cadillac Motor Car Division to give its owners the same high standards of craftsmanship in service that are upheld in the manufacture of our cars.

This is made possible by Cadillac's trained service men whose years of experience with Cadillac cars average approximately eleven years per man. These men are kept up-to-date by continuous Factory training, through monthly magazines, special letters and bulletins.

The most valuable contribution of Authorized Cadillac-LaSalle service to the salesman is, however, in maintaining the owner's good will and interest in Cadillac. Authorized Service keeps the cars in satisfactory operating condition with a minimum of expense and inconvenience. In addition, the Lubrication Agreement, Service Contract, and the Owner Follow-Up System provide a means of maintaining regular contact with each owner.

LUBRICATION AGREEMENT

The value of the Lubrication Agreement to Cadillac distributors and dealers is no longer questioned. This single service has brought over a million calls to distributors' and dealers' service stations since it was introduced by Cadillac in 1931.

The Cadillac-LaSalle Lubrication Agreement is based on the idea of *mutual advantage to both the car owner and the service station*—intended to assure owner satisfaction through regular, expert service at a substantial saving to the owner.

By purchasing his lubrication work in advance, the owner receives Cadillac lubrication and inspection service at 1000-mile intervals for a period of 12,000 miles at a price reduction of about 25 per cent.

The Lubrication Agreement includes all lubrication operations on a schedule recommended by Cadillac engineers and all lubricants including engine oil, except those small quantities added between 1,000 mile lubrications. It also includes two changes of rear axle and transmission lubricant and six changes of engine oil in addition to lubrication of all chassis points.

Although the sale of Lubrication Agreements is primarily a service department activity, the benefits that a salesman may secure from having his customers as Lubrication Agreement holders will justify considerable effort on his part to sell one of these agreements to each new car purchaser.

The *reduced prices* of the Lubrication Agreement are as follows:

	Price
LaSalle 39-50	$28.50
Cadillac 39-61	28.50
Cadillac 39-60s	31.00
Cadillac 39-75	31.00
Cadillac 39-90	45.00

Repeat sale business can be secured more easily if owners return regularly to the dealer's service station. Periodic contacts secured through the sale of Lubrication Agreements assure satisfactory operation of the car, correction of any misunderstanding that might occur, and advance information on the owner's plans for future purchases.

SERVICE CONTRACT

The Cadillac-LaSalle Service Contract offers new owners economical mechanical maintenance on Cadillac-LaSalle cars. The Service Contract covers all necessary maintenance work—on both chassis and body, including material and labor—for the first 12,000 miles or first year for as low as $6.25 per month including lubrication.

The service is rendered at the regular 1,000-mile intervals when the car is brought in for lubrication and includes everything except tires, anti-freeze, accessory repairs, accident work and appearance service.

Through the medium of the Service Contract the salesman can tell the owner exactly how much it will cost him to operate his new Cadillac or LaSalle for the first year or 12,000 miles for both lubrication and mechanical repairs.

The purchaser of a Service Contract must first purchase a Lubrication Agreement. When an owner's car is covered by both he is assured of trouble-free operation of his car for as little as 5/8 of a cent per mile.

One of the most powerful talking points that a salesman can have is—economy of up-keep. With these two plans, Cadillac salesmen have plenty of ammunition to blast asunder any myths as to high cost of maintenance that may exist in the minds of their prospects.

Remember to explain that the purchasers of either of these service plans may use them anywhere in the United States where the Cadillac Authorized Service Sign is displayed. The owner does not buy from any one Cadillac distributor or dealer—rather he purchases in advance, the privilege of having his service work done by trained Cadillac service men anywhere in the country.

The prices of the Service Contract and Lubrication Agreement are totaled below:

	Lubrication Agreement*	First Year Service Contract	Total	Average Cost Per Month
LaSalle 39-50	$30.25	$44.75	$75.00	$ 6.25
Cadillac 39-61	30.25	49.75	80.00	6.67
Cadillac 39-60s	32.75	52.25	85.00	7.08
Cadillac 39-75	32.75	62.25	95.00	7.92
Cadillac 39-90	48.00	82.00	130.00	10.83

*Price of Lubrication Agreement includes new car oil change at 1000 miles when sold with Service Contract.

The salesman who sells the Service Contract to his customers is assured of three things that mean much to his future welfare:

1. Most efficient and economical operation of the owner's Cadillac or LaSalle.
2. Maintained contact with the owner.
3. Thorough goodwill of the owner for himself, his distributor, dealer, and Cadillac-LaSalle.

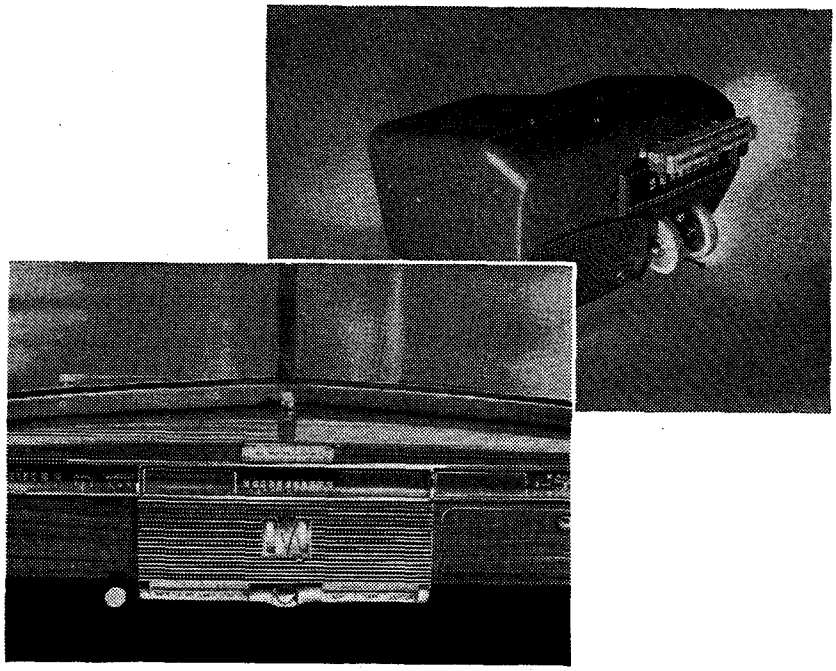

Cadillac Automatic Radio

The new Cadillac Radio is so simplified in operation that it is literally automatic. To tune in the station desired it is only necessary to push one button. Tuning from one to any other of the five push button stations is instantaneous and as simple and easy as turning on the lights at home.

Automatic Volume Control has been so improved that you can switch from one local station to another without having to adjust the manual volume control, with rare exception. Tone and local distance switches have been combined in one simple "Normal-Quiet" lever.

Tone, fidelity, power and sensitivity are perfectly balanced for faithful noise-free reproduction and outstanding distance-getting ability.

The set is an eight-tube, compact single unit mounted directly behind the instrument board grille. Controls are easy to reach and simple to operate and the dial is exceptionally visible.

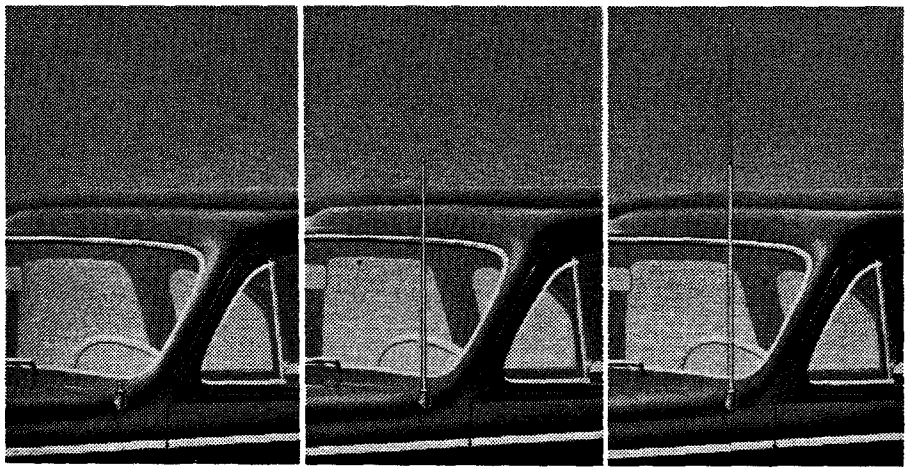

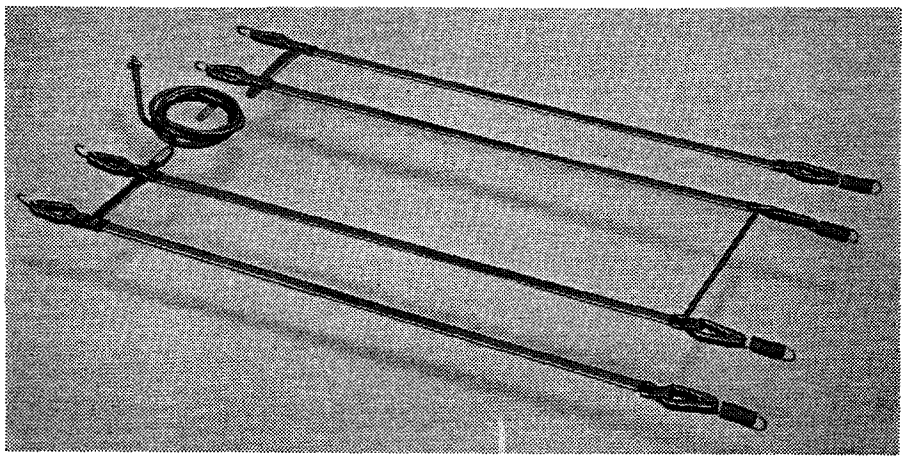

Radio Aerials

Two different types of aerials are optional for use with the new Cadillac Automatic Radio. Either one is included in the installed price of the radio.

A double running board aerial is available for all 1939 models except the LaSalle and Cadillac 61 cars without running boards. This type aerial is satisfactory for normal reception in good radio areas, but is not recommended for poor radio areas.

The new Vacuum Aerial when fully extended, is the most effective radio aerial yet developed and in conjunction with the new Cadillac Automatic Radio will provide the finest radio performance available. The aerial is raised and lowered by vacuum power by operating a control on the instrument panel.

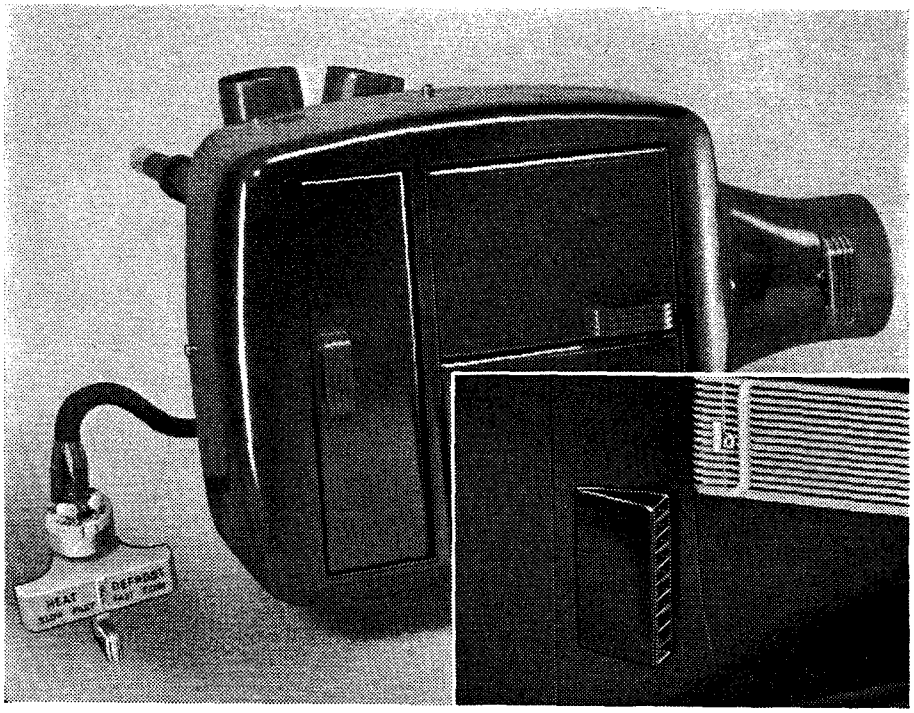

Ventilating Heater-Defroster

The new Cadillac Ventilating Heater-Defroster is an important advancement in motor car heaters. New innovations are direct and indirect heating and controlled ventilation. Other features include greater heat output and more efficient defrosting than before.

Direct and indirect heat is obtained by the use of a reversible motor. When the fan turns in a clockwise motion, air is blown outward in the conventional manner. When the fan turns in the opposite direction, air is sucked in through the heater core and forced out the sides, top and bottom providing indirect heat.

The ventilating feature introduces fresh air directly into the heater. By continually drawing in outside air a slight pressure is built up inside the car, preventing outside air from leaking into the body. The fresh air also lowers humidity materially, reducing windshield fogging as well as freshening the air within the car, preventing the stuffy atmosphere often experienced in winter driving.

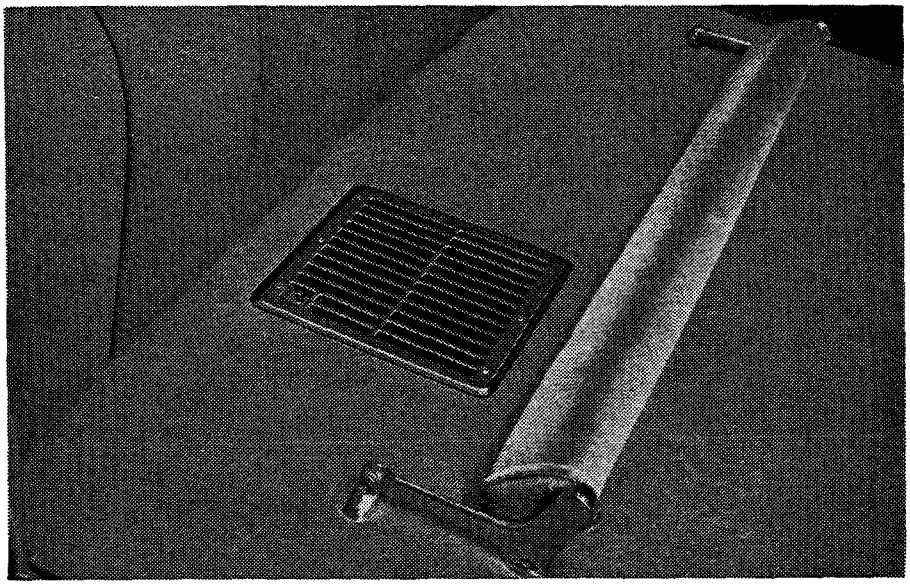

Rear Compartment Heater

The new Cadillac Rear Compartment Hot Water Heater is designed primarily for seven passenger sedans and limousines where it is essential that heat be provided direct to the rear compartment. This heater must be used in conjunction with the regular Heater-Defroster that is mounted in the front compartment and is adaptable to Cadillac Fleetwood cars Series 39-75 and 90 only.

The grille of the new heater lies flush with the floor of the car. The motor switch may be turned on or off either by the hand or foot yet the control does not stick up enough to interfere with passengers' feet. The amount of heat is governed by varying the speed of the fan which is mounted under the grille.

The heater is rather quiet in operation and provides ample heat for the rear compartment.

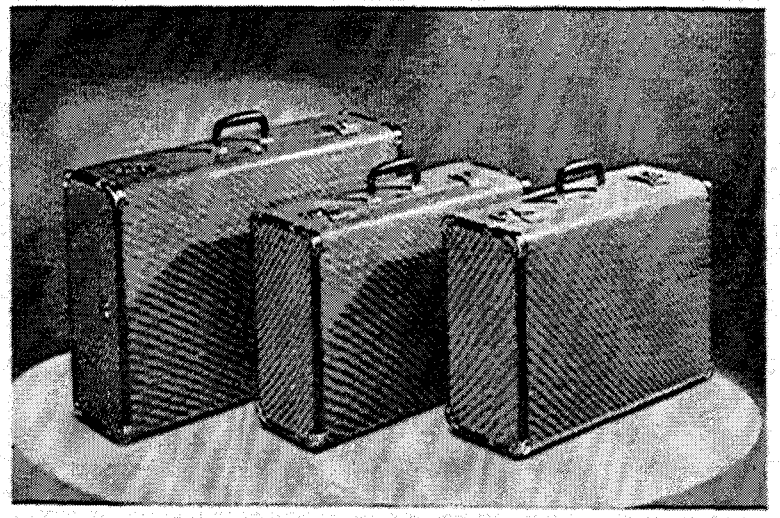

Luggage Equipment

Luggage equipment for all occasions is available to fit the luggage compartments of all Cadillac and LaSalle Touring Sedan body styles. Three different cases are offered in brown and white striped Ducoid with handles and trimmings finished in natural cowhide.

The Aviatrix, lined with rayon, has space for seven dresses which may be hung up in a closet without removal from the hangers. The Aviator will accommodate two suits without wrinkling and is remarkably roomy. The Wardrolette is capacious and convenient. It will carry three suits or as many as fifteen dresses.

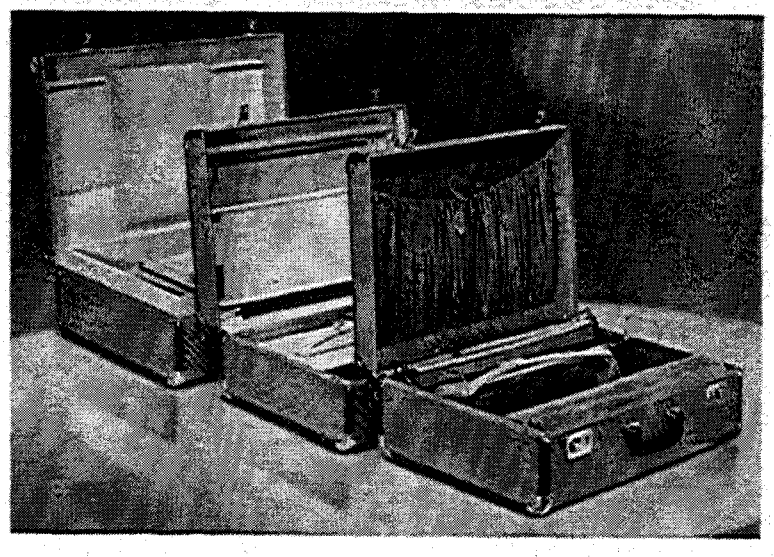

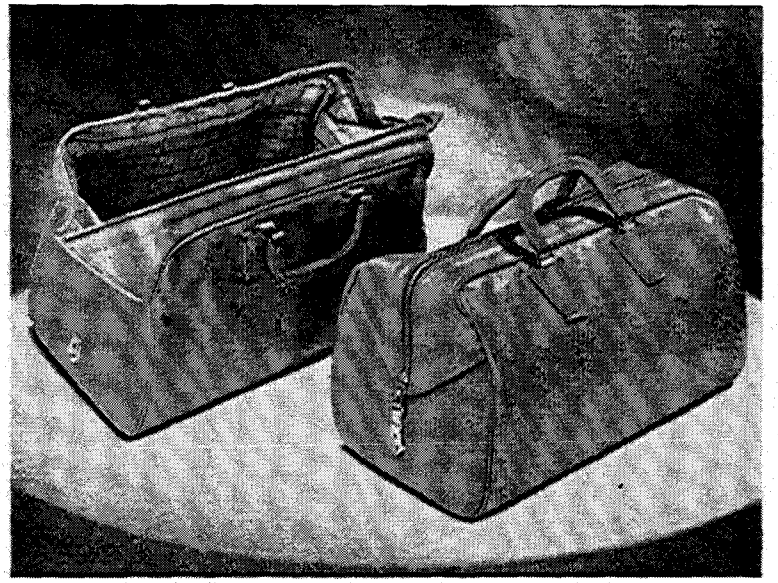

Sport Bag and Aerolite Case

The Cadillac Sport Bag and Aerolite Case are ideal for short trips not requiring a great deal of extra clothing.

The Sport Bag is convenient for use in carrying golf, and other sport things, inasmuch as it can be opened wide and safely locked. It is constructed of finest top grain cowhide giving an attractive masculine appearance.

The Aerolite Case is the ideal bag for short trips. Small in size, it has plenty of room for shirts, socks, extra trousers, etc.



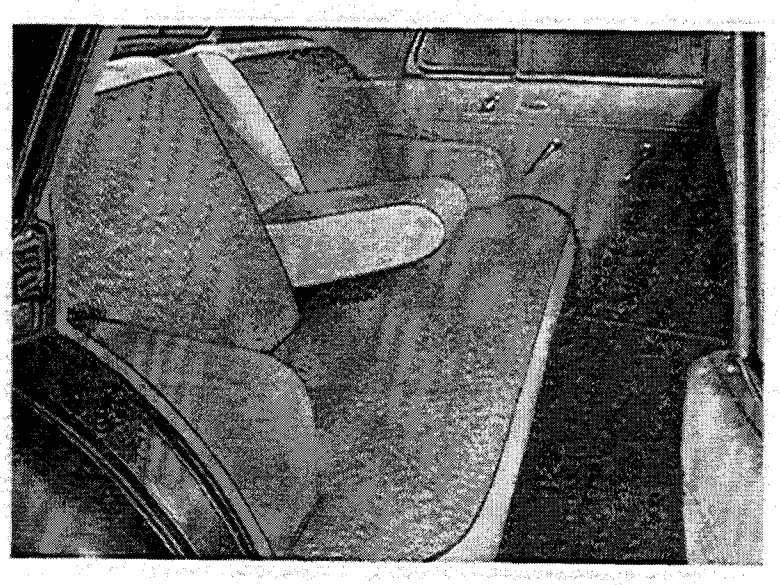

Seat Covers

Cadillac Sea-Breeze Seat Covers contribute much to driving comfort besides protecting clothing and upholstery.

Windshield Washer

The Cadillac Windshield Washer is an important safety item. Powered by manifold vacuum, the washer draws water from a reservoir and sprays it on the windshield through nozzles in the windshield wiper brackets. It is invaluable for removing mud, slush and dirt from the windshield while driving. In the wintertime an anti-freeze is added to the water to prevent freezing.

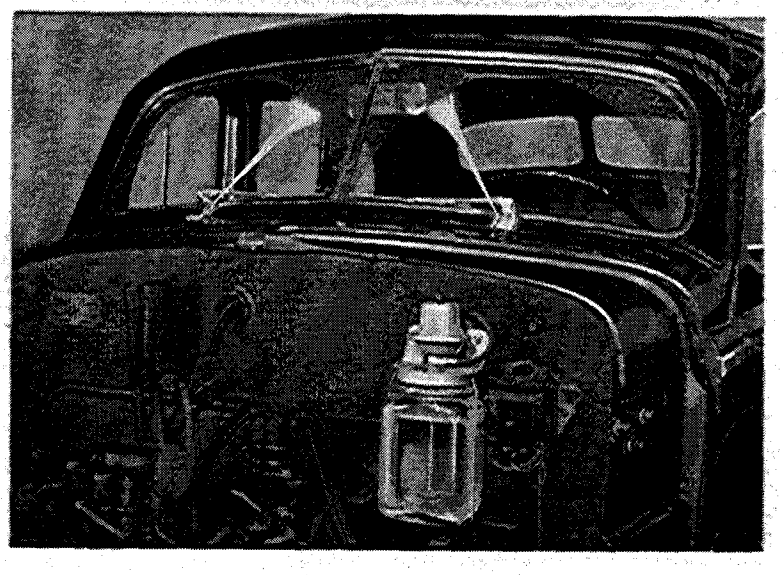

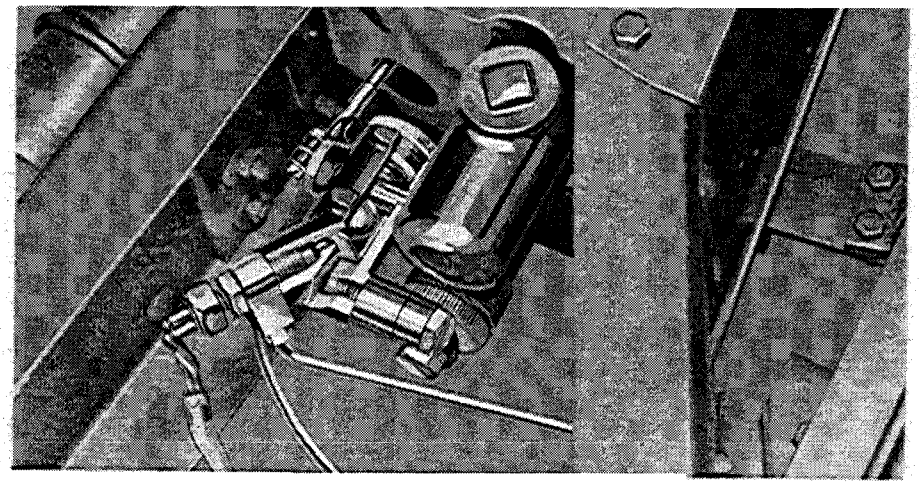

No-Rol

Whenever the car is on an upward incline and the clutch pedal is depressed, the No-Rol will hold the foot brakes at the applied pressure without keeping a foot on the brake pedal or using the emergency brakes, leaving the right foot free to operate the accelerator. As the clutch is engaged the No-Rol is released.

Automatic Battery Filler

The Automatic Battery Filler will reduce hard starting and run-down batteries by maintaining the correct solution level in the car battery, materially lengthening battery life and reducing the number of re-chargings.

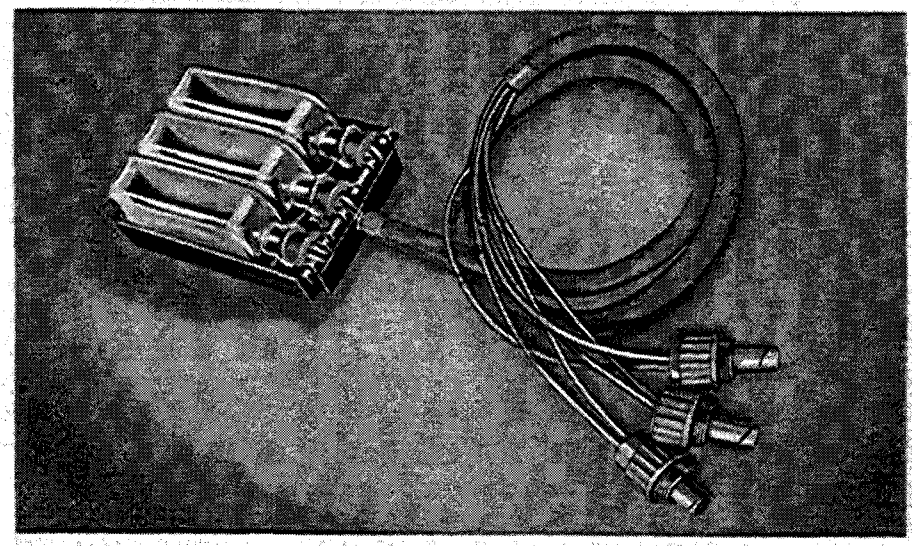

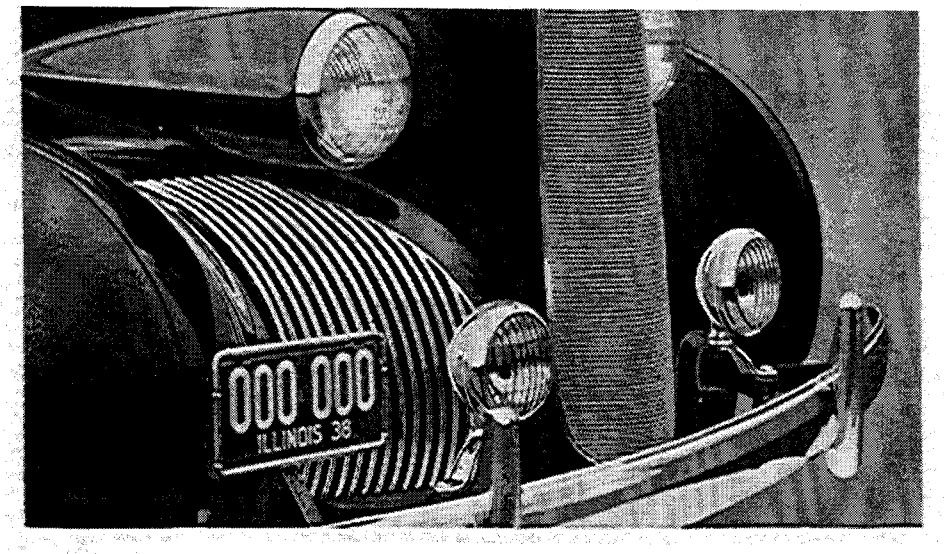

Adverse Weather Lights

Cadillac Fog Lights are designed to increase the driver's range of visibility under adverse night driving conditions. They are equipped with special amber-colored prismatic lens which have remarkable power of penetration in unfavorable atmospheric conditions such as fog, snow, rain, sleet, etc., or where preferred are available with clear prismatic lens. The clear lens while not as penetrative for adverse weather are remarkable night highway driving aids.

Spotlight

The new Cadillac Spotlight is a boon to night drivers. Its powerful beam will clearly illuminate objects several thousand feet away. The Spotlight is finished in chrome with a colored plastic handle to match the interior as well as exterior of the car.

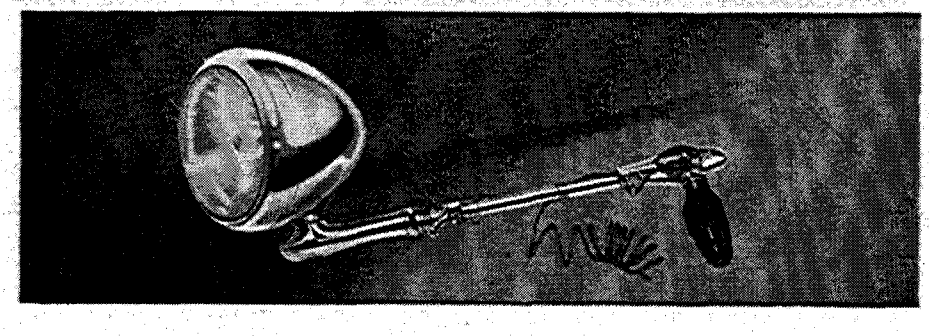

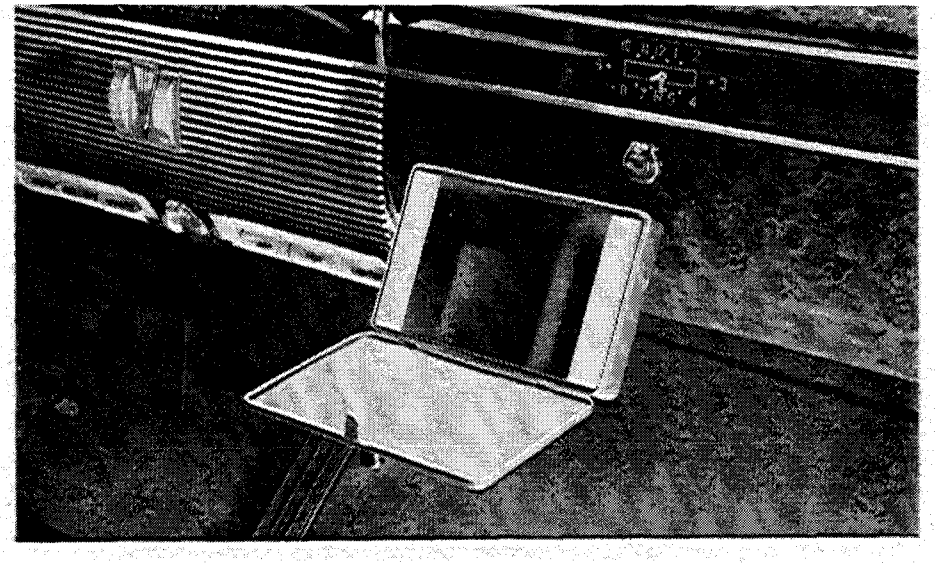

Illuminated Vanity Mirror

The Illuminated Vanity Mirror for ladies has self-contained illumination that fully lights up the user's face. Mounted underneath the instrument panel, the mirror is easily adjusted to any angle.

Hinge Mirror

The Cadillac Hinge Mirror brings into view the otherwise blind left rear corner of the car. The mirror while rigidly clamped or bolted to the front door pillar is adjustable so that it may be turned to any angle.

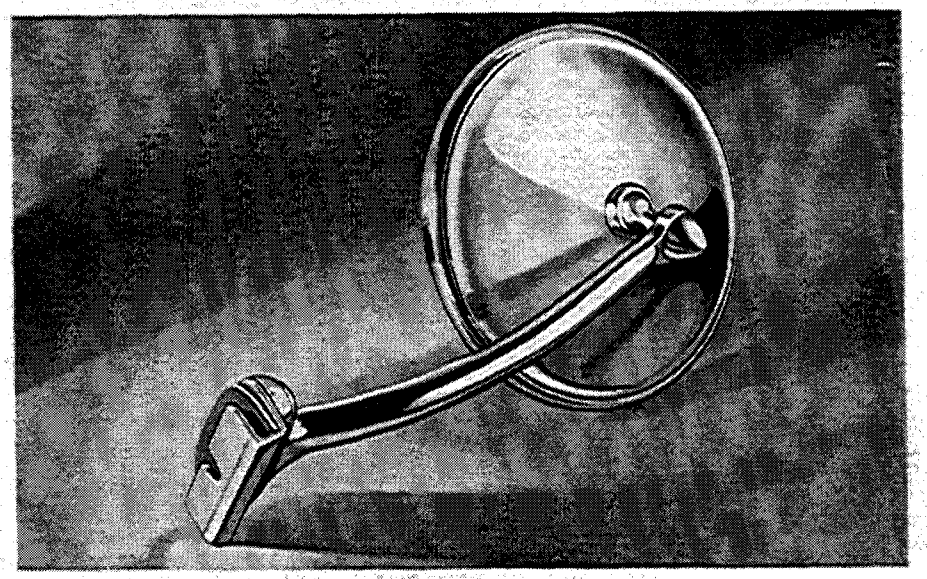

DETAILED SPECIFICATIONS

ENGINE	LaSalle	Cadillac "61" Cadillac Sixty Special	Cadillac Fleetwood	Cadillac Sixteen
No. of cylinders	8	8	8	16
Valve arrangement	L-head	L-head	L-head	L-head
Bore and stroke	3⅜" x 4½"	3½" x 4½"	3½" x 4½"	3¼" x 3¼"
Engine mounted on:				
Front	Vulcanized rubber	Vulcanized rubber	Vulcanized rubber	Vulcanized rubber
Rear	Vulcanized rubber	Vulcanized rubber	Bolt through rubber	Bolt through rubber
Rubber mounting used at	All points	All points	All points	All points
Number of points of suspension	3	3	3	5
Engine make	Own	Own	Own	Own
Engine model	39-50	39-61, 39-60S	39-75	39-90
Cylinder arrangement	90° V-8	90° V-8	90° V-8	135° V-16
Cylinder head material	Cast iron	Cast iron	Cast iron	Cast iron
Piston displacement	322	346	346	431
Taxable horsepower	36.45	39.20	39.20	67.60
Maximum brake horsepower at R.P.M.	125 at 3400	135 at 3400	140 at 3400	185 at 3600
Standard compression ratio	6.25 to 1	6.25 to 1	6.7 to 1	6.75 to 1
Standard compression pressure (lbs.)	155# at 1000 R.P.M.	155# at 1000 R.P.M.	170# at 1000 R.P.M.	180# at 1000 R.P.M
PISTONS AND RINGS				
Piston material	Lo-Ex aluminum alloy	Lo-Ex aluminum alloy	Lo-Ex aluminum alloy	Lo-Ex aluminum alloy
Piston features	T-slot, anodized finish	T-slot, anodized finish	T-slot, anodized finish	T-slot, anodized finis
Piston weight, oz. (without rings, pin or locking rings)	16.88	18.30	18.30	15.280
Piston weight, oz. (with rings, pin and locking rings)	25.13	25.13	25.13	21.136
Piston length	4⅛"	4⅛"	4⅛"	3¾"
Piston clearance	.0019"	.0021"	.0021"	.0017"
No. of oil rings used per piston	2	2	2	1
No. of compression rings used per piston	2	2	2	2
RODS AND PINS				
Wrist pin length	2 15/16"	3 1/16"	3 1/16"	2 25/32"
Wrist pin diameter	⅞"	⅞"	⅞"	13/16"

DETAILED SPECIFICATIONS—Cont'd

RODS AND PINS—Cont'd	LaSalle	Cadillac "61" Cadillac Sixty Special	Cadillac Fleetwood	Cadillac Sixteen
Is wrist pin locked in piston or floating?	Floating	Floating	Floating	Locked in rod
Wrist pin clearance	.0004 press at one end .0000 clearance other end	.0004 press fit one end .0000 clearance other end	.0004 press fit one end .0000 clearance other end	.00035" clearance
Wrist pin hole finish	Diamond bore	Diamond bore	Diamond bore	Diamond bore
Connecting rod length, center to center	8¾"	8¾"	8¾"	6⅜"
Connecting rod material	#1035 steel	#1035 steel	#1035 steel	#1340 steel
Connecting rod weight, ounces	37.472	37.472	37.472	24.528
Crankpin journal diameter and length	2.460" x 2 1/32"	2.460" x 2 1/32"	2.460" x 2 1/32"	2" x 1¾"
Connecting rod bearing material	#1010 steel backed babbitt	#1010 steel backed babbitt	#1010 steel backed babbitt	#1010 steel backed babbitt
Connecting rod bearing clearance	.0015"	.0015"	.0015"	.0015"
Connecting rod bearing end play	.003-.006"	.003-.006"	.003-.006"	.0045-.0075"
Connecting rod bearing poured, spun or separate	Separate	Separate	Separate	Separate
Rods and pistons removed from	Above	Above	Above	Above
CRANKSHAFT				
Vibration dampener used	No	Yes	Yes	Yes
Crankshaft counterweights used, No. of	6	6	6	8
Torsional vibration dampener type	None	Laminated springs	Laminated springs	Rubber
Bending vibration dampener type	None	Flywheel	Flywheel	None
Which main bearing takes thrust?	Center (#2)	Center (#2)	Center (#2)	Center (#5)
Crankshaft end play	.001-.005"	.001-.005"	.001-.005"	.001-.005"
Main bearing material	Br. or st. backed bab.	Br. or st. backed bab.	Br. or st. backed bab.	Steel backed babbitt
Main bearing clearance	.0015"	.0015"	.0015"	.0015"
Main bearing type	Slip-in	Slip-in	Slip-in	Slip-in
No. 1 main bearing journal, diameter & length	2½" x 1 1/16"	2½" x 1 1/16"	2½" x 1 1/16"	2½" x 1 1/16"
No. 2 main bearing journal, diameter & length	2½" x 1 5/32"	2½" x 1 5/32"	2½" x 1 5/32"	2½" x 1 1/16"
No. 3 main bearing journal, diameter & length	2½" x 31/32"	2½" x 31/32"	2½" x 31/32"	2½" x 1 1/16"
No. 4 main bearing journal, diameter & length				2½" x 1 1/16"
No. 5 main bearing journal, diameter & length				2½" x 1 5/16"
No. 6 main bearing journal, diameter & length				2½" x 1 1/16"
No. 7 main bearing journal, diameter & length				2½" x 1 1/16"
No. 8 main bearing journal, diameter & length				2½" x 1 1/16"
No. 9 main bearing journal, diameter & length				2½" x 2 5/32"

DETAILED SPECIFICATIONS—Cont'd

TIMING CHAIN	LaSalle	Cadillac "61" Cadillac Sixty Special	Cadillac Fleetwood	Cadillac Sixteen
Timing chain make	Morse	Morse	Morse	Morse
Timing chain model	Type C #3682-R	Type C #3682-R	Type C #3682-R	Type C #3682-R
Timing chain length, inches	23¼"	23¼"	23¼"	23¼"
Timing chain, number of links	62	62	62	62
Timing chain, width	1¼" side guide	1¼" side guide	1¼" side guide	1¼" side guide
Timing chain, pitch	⅜"	⅜"	⅜"	⅜"
Timing chain adjustment	None	None	None	None
VALVES				
Intake valve head actual overall diameter	1.876-1.886"	1.876-1.886"	1.876-1.886"	1.495-1.505"
Intake valve angle of seat	45°	45°	45°	45°
Insert used?	No	No	No	No
Valve seat cooled by	Directed water circulation	Directed water circulation	Directed water circulation	Directed water circulation
Intake valve stem to guide clearance	.0023"	.0023"	.0023"	.002"
Intake valve lift	.335"	.335"	.335"	.290"
Intake valve spring pressure and length				
with valve closed	66 lbs.-1.926"	66 lbs.-1.926"	66 lbs.-1.926"	50 lbs.-1.772"
with valve open	145 lbs.-1.581"	145 lbs.-1.581"	145 lbs.-1.581"	98 lbs.-1.482"
Is tappet clearance automatically adjusted?	Yes	Yes	Yes	Yes
Exhaust valve head actual overall diameter	1.628-1.636"	1.626-1.636"	1.626-1.636"	1.370-1.380"
Exhaust valve angle of seat	45 degrees	45 degrees	45 degrees	45 degrees
Insert used?	No	No	No	No
Valve seat cooled by	Directed water circulation	Directed water circulation	Directed water circulation	Distributing tube
Exhaust valve stem to guide clearance	.0033"	.0033"	.0033"	.003"
Exhaust valve lift	.345"	.345"	.345"	.302"
Exhaust valve spring pressure and length				
with valve closed	66#-1.926"	66#-1.926"	66#-1.926"	50#-1.772"
with valve open	145#-1.581"	145#-1.581"	145#-1.581"	100#-1.470"
Is tappet clearance automatically adjusted?	Yes	Yes	Yes	Yes

DETAILED SPECIFICATIONS—Cont'd

VALVES—Cont'd	LaSalle	Cadillac "61" Cadillac Sixty Special	Cadillac Fleetwood	Cadillac Sixteen
Valve timing—Intake opens	T.D.C.	T.D.C.	T.D.C.	6° B.T.C.
Valve timing—Intake closes	42° A.B.C.	42° A.B.C.	42° A.B.C.	28° A.B.C.
Valve timing—Exhaust opens	52° B.B.C.	52° B.B.C.	52° B.B.C.	44° B.B.C.
Valve timing—Exhaust closes	10° A.T.C.	10° A.T.C.	10° A.T.C.	12° A.T.C.
LUBRICATION				
Valve lubrication method	Pressure	Pressure	Pressure	Pressure
Lubricating system type	Pressure	Pressure	Pressure	Pressure
Oil pressure to main bearings	Yes	Yes	Yes	Yes
Oil pressure to connecting rod bearings	Yes	Yes	Yes	Yes
Oil pressure to wrist pins	Yes	Yes	Yes	No
Oil pressure to camshaft bearings	Yes	Yes	Yes	Yes
Timing gear lubrication	Positive	Positive	Positive	Positive
Oil pump type	Helical gear	Helical gear	Helical gear	Helical gear
Oil grade recommended—S.A.E. viscosity	Lowest Temp. +32°F—20W or S.A.E. 20 +10°F—20W −10°F—10W Below −10°F—10W and 10% Kerosene	Lowest Temp. +32°F—20W or S.A.E. 20 +10°F—20W −10°F—10W Below −10°F—10W and 10% Kerosene	Lowest Temp. +32°F—20W or S.A.E. 20 +10°F—20W −10°F—10W Below −10°F—10W and 10% Kerosene	Lowest Temp. +32°F—20W or S.A.E. 20 +10°F—20W −10°F—10W Below −10°F—10W and 10% Kerosene
Normal oil pressure lbs. at M.P.H.	25# at 30 M.P.H.	25# at 30 M.P.H.	25# at 30 M.P.H.	25# at 30 M.P.H.
Pressure at which relief valve opens	30 lbs.	30 lbs.	30 lbs.	30 lbs.
Capacity of oil reservoir, quarts	7	7	7	11
Drain oil, miles	2000	2000	2000	2000
Type of oil drain	Threaded plug	Threaded plug	Threaded plug	Threaded plug
Oil reservoir gauge type	Dip stick	Dip stick	Dip stick	Float
External oil filter, make	None	None	None	A. C.
Chassis lubrication type	High pressure	High pressure	High pressure	High pressure
Crankcase ventilating system	Yes	Yes	Yes	Yes
FUEL				
Gasoline tank capacity	22 gallons	Sixty—22 gals. Spec.—22 gals. V-8—26.5 gals.	26.5 gallons	26.5 gallons
Fuel feed type	Camshaft pump	Camshaft pump	Camshaft pump	2 mechanical pumps

DETAILED SPECIFICATIONS—Cont'd

FUEL—Cont'd	LaSalle	Cadillac "61" Cadillac Sixty Special	Cadillac Fleetwood	Cadillac Sixteen
Carburetor make	Carter	Stromberg	Stromberg	Carter
Carburetor size	1⅛"	1¼"	1¼"	1⅛"
Carburetor type	Plain tube	Plain tube	Plain tube	Plain tube
Up or down draft	Down draft	Down draft	Down draft	Down draft
Single or dual	Dual	Dual	Dual	Dual
Heat adjustment	None	None	None	None
Automatic choke type	Thermostatic	Thermostatic	Thermostatic	Thermostatic
Automatic choke make	Carter	Stromberg	Stromberg	Carter
Air cleaner make	A.C.	A.C	A.C.	A.C.
Intake silencer make	A.C.	A.C	A.C.	A.C.
COOLING				
Cooling circulation, type of	Pump	Pump	Pump	Two pumps
Water pump type	Centrifugal	Centrifugal	Centrifugal	Centrifugal
Water pump drive	Vee belt	Vee belt	Vee belt	Vee belt
Radiator shutter make and control	Own-Thermostatic	Own-Thermostatic	Own-Thermostatic	Own-Thermostatic
Radiator core type	Tube and fin	Tube and fin	Tube and fin	Cellular
Radiator core make	Harrison	Harrison	Harrison	Harrison
Cooling capacity, gallons	6¼	Spec. 6, "61", 6¼	6¼	7-½
Water jackets full length of cylinders	Yes	Yes	Yes	Yes
Fan belt type	1-Vee belt	1-Vee belt	1-Vee belt	2-Vee belts
Fan belt length (pitch circumf.)	41¾"	41¾"	41¾"	49⅝"
Fan belt width, maximum	1⅛"	1⅛"	1⅛"	⅝"
Fan drive ratio	.95 to 1	.95 to 1	.95 to 1	.95 to 1
IGNITION				
Ignition unit make	#1110604	#1110604	#1110604	Delco-Remy
Manual advance, degrees	20°	20°	20°	20°
Maximum automatic advance, degrees	22°	22°	22°	18°
Vacuum advance, degrees	None	None	None	None
Distributor breaker gap	.0125-.0175"	.0125-.0175"	.0125-.0175"	.0125-.0175"
Timing, breaker points open at	5° B.T.C.	5° B.T.C.	5° B.T.C.	
Firing order	Front 2-4-6-8 1-3-5-7 1-8-7-3-6-5-4-2	Front 2-4-6-8 1-3-5-7 1-8-7-3-6-5-4-2	Front 2-4-6-8 1-3-5-7 1-8-7-3-6-5-4-2	Front 2-4-6-8-10-12-14-16 1-3-5-7-9-11-13-15 1-4-9-12-3-16-11-8-15-14 7-6-13-2-5-10

DETAILED SPECIFICATIONS—Cont'd

IGNITION—Cont'd	LaSalle	Cadillac "61" Cadillac Sixty Special	Cadillac Fleetwood	Cadillac Sixteen
Ignition coil make	#1115128	Delco-Remy #539-C	Delco-Remy #539-C	Delco-Remy #553-E (two)
Amperage draw of coil with engine stopped	4.4	4.4	4.4	4.4
Amperage draw of coil with engine idling	2.2	2.2	2.2	2.2
Spark plug thread	10 mm.	10 mm.	10 mm.	10 mm.
Spark plug model	#104	#104	#104	#104
Spark plug make	A.C.	A.C.	A.C.	A.C.
Spark plug gap	.025-.030"	.025-.030"	.025-.030"	.030-.035"
BATTERY				
Battery make	Delco	Delco	Delco	Delco
Battery Number	17 E.1W	17 K.1W	17 K.1W	21 D.W
Battery capacity—ampere hours	115	112	112	164
Battery bench charging rate—start	10	10	10	10
Battery bench charging rate—finish	8	8	8	8
Which battery terminal is grounded?	Positive	Positive	Positive	Positive
STARTING MOTOR				
Starting motor make	Delco-Remy 727-V (4-pole)	Delco-Remy 727-V (4-pole)	Delco-Remy 727-V (4-pole)	Delco-Remy #000714 (6-pole)
Starting motor drive	Solenoid shifted gear	Solenoid shifted gear	Solenoid shifted gear	Solenoid shifted gear
Automatic starting device	Delco-Remy push button	Delco-Remy push button	Delco-Remy push button	Delco-Remy push button
Starting motor pinion meshes flywheel	Front	Front	Front	Front
Flywheel teeth, integral or steel ring	Steel ring	Steel ring	Steel ring	Steel ring
Gear ratio between starter armature and flywheel	17 to 1 (approx.)	17 to 1 (approx.)	17 to 1 (approx.)	17 to 1 (approx.)
GENERATOR	Peak load	Peak load	Peak load	Peak load
Generator make	Delco-Remy #1101056	DR #1101056	D.R.—#1102654	D.R.—#1102655
Generator driven by	Belt	Belt	Belt	Belt
Is generator air cooled?	Yes	Yes	Yes	Yes
Voltage at cutout closing	6.9-7.5	6.9-7.5	6.7-7.6	6.7-7.6
Amperes to open cutout	0—3	0—3	0—2	0—2

DETAILED SPECIFICATIONS—Cont'd

GENERATOR—Cont'd	LaSalle	Cadillac "61" Cadillac Sixty Special	Cadillac Fleetwood	Cadillac Sixteen
Generator normal charging rate	28-30 amps. max cold. Due to voltage regulation actual charging rate is controlled by state of charge of battery	28 amps. max. Due to voltage regulation actual charging rate is controlled by state of charge of battery	30 amps. max. Due to voltage regulation actual charging rate is controlled by state of charge of battery	30 amps. max. Due to voltage regulation actual charging rate is controlled by state of charge of battery
Car speed for maximum normal charging	50 M.P.H.	50 M.P.H.	17 M.P.H.	17 M.P.H.
Generator belt type	Vee	Vee	Vee	Vee
Generator belt width, maximum	¾"	¾"	¾"	
Generator type	Peak load	Peak load	Peak load	Peak load
LAMPS				
Lighting switch make	Delco-Remy #1994506	Delco-Remy #1994506	Delco-Remy #1994506	Delco-Remy #1994506
Are double or triple filament bulbs used?	Double 32-32 c.p.	Double 32-32 c.p.	Double 32-32 c.p.	Double 32-32 c.p.
How are headlamps dimmed?	Depressed beam foot switch	Depressed beam foot switch	Depressed beam foot switch	Depressed beam foot switch
Headlight make	Guide-Multi-beam	Guide-Multi-beam	Guide-Multi-beam	Guide-Multi-beam
Headlight reflector make	Parabolic	Parabolic	Parabolic	Parabolic
Headlight cover glass make	Guide	Guide	Guide	Guide
Headlight cover glass diameter	7"	7"	7"	7"
Parking light make	In headlamp	In headlamp	In headlamp	Guide on fenders
Tail light make	Guide	Guide	Guide	Guide
Horn type	Airtone	Airtone	Airtone	Airtone
Horn make	Delco-Remy K-33-H	Delco-Remy K-33-H	Delco-Remy K-33-H	Delco-Remy K-33-D
Amperage draw of horn	16-18	16-18	16-18	12-14
CLUTCH				
Clutch make	Long	Long	Long	Long
Operated dry or in oil	Dry	Dry	Dry	Dry

DETAILED SPECIFICATIONS—Cont'd

CLUTCH—Cont'd	LaSalle	Cadillac "61" Cadillac Sixty Special	Cadillac Fleetwood	Cadillac Sixteen
Clutch vibration insulator or neutralizer	Coil spring type	Coil spring type	Coil spring type	No
Number of clutch driven discs	1	1	1	1
Clutch facing material	Woven	Woven	Woven	Woven
Clutch facing inside diameter	6¾"	7"	7"	7"
Clutch facing outside diameter	10"	11"	11"	11½"
Clutch facing thickness	.137"	.137"	.137"	.125"
Number of clutch facing used	2	2	2	2
Facing area	85.5 sq. in.	113.4 sq. in.	113.4 sq. in.	130.8 sq. in.

TRANSMISSION

Transmission make	Own	Own	Own	Own
Transmission location	Unit	Unit	Unit	Unit
Number of forward speeds	3	3	3	3
Control—on steering column	Manual	Manual	Manual	Manual
Gear ratio in high	3.92	3.92	4.58	4.31
Transmission ratio in second	1.53 to 1	1.53 to 1	1.53 to 1	1.53 to 1
Transmission ratio in low	2.39 to 1	2.39 to 1	2.39 to 1	2.39 to 1
Transmission ratio in reverse	2.39 to 1	2.39 to 1	2.39 to 1	2.39 to 1
Type of gears—1st	Sliding-helical	Sliding-helical	Sliding-helical	Sliding-helical
Type of gears—2nd	Constant mesh helical	Constant mesh helical	Constant mesh helical	Constant mesh helical
Type of gears—reverse	Sliding-helical	Sliding-helical	Sliding-helical	Sliding-helical
Synchronous meshing 2nd and 3rd gears	Yes	Yes	Yes	Yes
Transmission oil capacity, pints	2½	2½	2½	2½
Transmission oil grade recommended—S.A.E. viscosity	S.A.E. 90 E.P.	S.A.E. 90 E.P.	S.A.E. 90 E.P.	S.A.E. 90 E.P.
Universal make	Mechanics	Mechanics	Mechanics	Mechanics
Universal model	#3-C	#3-C	#3-C	#3-C
Universal type	Needle bearing	Needle bearing	Needle bearing	Needle bearing
Universal joints lubricated	Permanently	Permanently	Permanently	Permanently
Drive and torque taken through	Rear springs	Rear springs	Rear springs	Rear springs

DETAILED SPECIFICATIONS—Cont'd

REAR AXLE	Cadillac "61" LaSalle	Cadillac Sixty Special	Cadillac Fleetwood	Cadillac Sixteen
Rear axle make	Own	Own	Own	Own
Rear axle type	Semi-floating	Semi-floating	Semi-floating	Semi-floating
Minimum road clearance under center of rear axle, tires inflated	8¼"	8¼"	8"	8"
Differential gear make	Own	Own	Own	Own
Rear axle oil capacity, quarts	2½	2½	3¼	3¼
Rear axle oil grade recommended, S.A.E. viscosity	90 Hypoid	90 Hypoid	90 Hypoid	90 Hypoid
Type of final gearing	Hypoid	Hypoid	Hypoid	Hypoid
Gear ratio, standard 5 pass. sedan	3.92	3.92	4.58	4.31
Optional gear ratio	None	None	None	None
No. of teeth in ring gear	47	47	55	56
No. of teeth in pinion	12	12	12	13
How is the pinion adjusted	No adjustment	No adjustment	No adjustment	No adjustment
How is pinion bearing adjusted?	None	None	None	None
Are pinion bearings in sleeve	No	No	No	No
Backlash between pinion and ring gear	.004-.010"	.004-.010"	.004-.010"	.004-.010"
Are pinion bearings preloaded	Yes			
TIRES AND WHEELS				
Tire make	U. S. & Firestone	U. S. & Firestone	U. S. & Firestone	U. S. & Firestone
Tire size	7.00-16	7.00-16	7.50-16	7.50-16
Number of plies	4	4	6	6
Inflation pressure front and rear	26# minimum	26#, Spec. 28#	32#	32#
Rim diameter	16"	16"	16"	16"
Rim width	4.50"	4.50"	5.00"	5.00"
Axle clearance, for jack, tires inflated, front	Bumper jack	Bumper jack	9⅝"	9⅝"
Axle clearance, for jack, tires inflated, rear	Bumper jack	Bumper jack	12¼"	12¼"
Wheel type	Slotted disc	Slotted disc	Slotted disc	Disc
Wheel make	Kelsey-Hayes	Kelsey-Hayes	Kelsey-Hayes	Kelsey-Hayes
SPRINGS				
Front, suspension, independent or conventional	Independent	Independent	Independent	Independent
Front spring type	Helical	Helical	Helical	Helical

DETAILED SPECIFICATIONS—Cont'd

SPRINGS—Cont'd	Cadillac "61" LaSalle	Cadillac Sixty Special	Cadillac Fleetwood	Cadillac Sixteen
Front spring material	GM #9260 steel	GM #9260 steel	GM #9260 steel	GM #9260 steel
Rear, suspension, Hi-Plane leaf or conventional	Hi-Plane leaf	Conventional	Conventional	Conventional
Rear spring type	Semi-elliptic	Semi-elliptic	Semi-elliptic	Semi-elliptic
Rear spring material	GM #9260 steel	GM #9260 steel	GM #9260 steel	GM #9260 steel
Rear spring length	52"	54¼"	62"	62"
Rear spring width	2"	2"	2¼"	2¼"
Rear spring number of leaves—5 pass. sedan	9	9	10	10
Spring leaves lubricated with	Wax impregnated liners	Wax impregnated liners	Wax impregnated liners	Wax impregnated liners
Spring shackles type, rear	Rubber	Threaded	Rubber and threaded	Rubber and threaded
Spring eye type	Rubber	Rubber	Rubber	Rubber
Stabilizers	Torsion bar	Front and rear	Front and rear	Front and rear
STEERING				
Steering gear type	Worm and double tooth roller	Worm and double tooth roller	Worm and double tooth roller	Worm and double tooth roller
Steering gear make	Saginaw	Saginaw	Saginaw	Saginaw
Caster angle	Negative 1¼° to 2¼°	Negative ¼° to 1¼°	0° to ¼°	0° to ¼°
Camber angle	0° to ¾°	Neg. ¼° to plus ½°	0° to ½°	0° to ½°
Toe-in inches, car in motion	0 to 1/16"	0 to 1/16"	0 to 1/16"	0 to 1/16"
Toe-in inches, car at rest	1/32 to 3/32"	1/32 to 3/32"	1/32 to 3/32"	1/32 to 3/32"
Crosswise inclination of kingpin, degrees	5° 6′	5° 44′	5° 1′	5° 1′
Front suspension type	Forked arms	Forked arms	Forked arms	Forked arms
Front suspension make	Own	Own	Own	Own
Forked arm bearings, type	Threaded, outer	Threaded	Threaded	Threaded
BRAKES				
Number of complete brakes	4	4	4	4
Foot brakes, make	Bendix	Bendix	Bendix	Bendix
Foot brakes, type of mechanism	Hydraulic	Hydraulic	Hydraulic	Hydraulic
Vacuum booster make	None	None	None	None
Brake lining molded or woven	Molded	Molded	Molded	Molded

DETAILED SPECIFICATIONS—Cont'd

BRAKES—Cont'd	Cadillac "61" LaSalle	Cadillac Sixty Special	Cadillac Fleetwood	Cadillac Sixteen
Brake drum material	Composite	Composite	Composite	Composite
Rear brake drum diameter	12"	12"	14"	14"
Rear brake internal or external	Internal	Internal	Internal	Internal
Rear brake lining, length per wheel				
Forward shoe	$11\frac{17}{32}$"	$11\frac{17}{32}$"	$13\frac{21}{32}$"	$13\frac{21}{32}$"
Reverse shoe	$12\frac{31}{32}$"	$12\frac{31}{32}$"	$15\frac{1}{32}$"	$15\frac{1}{32}$"
Total	$24\frac{1}{2}$"	$24\frac{1}{2}$"	$28\frac{11}{16}$"	$28\frac{11}{16}$"
Rear brake lining width	2"	2"	$2\frac{1}{4}$"	$2\frac{1}{4}$"
Rear brake lining thickness	$\frac{3}{16}$"	$\frac{3}{16}$"	$\frac{1}{4}$"	$\frac{1}{4}$"
Rear brake clearance	.010"	.010"	.010"	.010"
Front brake drum diameter	12"	12"	14"	14"
Front brake drum material	Composite	Composite	Composite	Composite
Front brake drum internal or external	Internal	Internal	Internal	Internal
Front brake lining, length per wheel				
Forward shoe	$11\frac{17}{32}$"	$11\frac{17}{32}$"	$13\frac{31}{32}$"	$13\frac{31}{32}$"
Reverse shoe	$12\frac{31}{32}$"	$12\frac{31}{32}$"	$15\frac{1}{32}$"	$15\frac{1}{32}$"
Total	$24\frac{1}{2}$"	$24\frac{1}{2}$"	$28\frac{11}{16}$"	$28\frac{11}{16}$"
Front brake lining width	2"	$2\frac{1}{4}$"	$2\frac{1}{4}$"	$2\frac{1}{4}$"
Front brake lining thickness	$\frac{3}{16}$"	$\frac{3}{16}$"	$\frac{1}{4}$"	$\frac{1}{4}$"
Front brake clearance	.010"	.010"	.010"	.010"
Total foot braking area	196 sq. in.	208 sq. in.	258 sq. in.	258 sq. in.
Per cent braking power on rear wheels	$45\frac{1}{2}$	$45\frac{1}{2}$	43-4	43
Hand brake location	Under dash on left side	Under dash on left side	Under dash on left side	Under dash on left side
Hand brake lever operates on	Rear service brakes	Rear service brakes	Rear service brakes	Rear service brakes
FRAME				
Frame make	A. O. Smith	A. O. Smith	A. O. Smith	A. O. Smith
Frame depth, maximum	$8\frac{5}{16}$"	$8\frac{5}{16}$"	$9\frac{7}{16}$"	$9\frac{7}{16}$"
Frame thickness, maximum	$\frac{1}{8}$"	$\frac{1}{8}$"	$\frac{1}{8}$"	$\frac{1}{8}$"

DETAILED SPECIFICATIONS—Cont'd

FRAME—Cont'd	Cadillac "61" LaSalle	Cadillac Sixty Special	Cadillac Fleetwood	Cadillac Sixteen
Width, maximum	2 3/8"	2 3/8"	2 1/4"	2 1/4"
Wheelbase	LaS. 120" "61" 126"	127"	141"	141"
Tread—front	58"	58"	60 1/2"	60 1/2"
Tread—rear	59"	61"	62 1/2"	62 1/2"
First serial number	61—8,290,001 LaS.—2,290,001	6,290,001	3,290,001	5,290,001
Serial number location	On crankcase behind left cylinder block and parallel to the body dash	On crankcase behind left cylinder block and parallel to the body dash	On crankcase behind left cylinder block and parallel to the body dash	Upper left rear corner of left cylinder block parallel to cylinder head
Overall length with bumpers	LaS.—202 1/2" 61—207 1/4"	214 1/4"	225 1/8"	222"
BEARINGS				
Starter motor commutator end bearing—type	In cast iron frame	In cast iron frame	In cast iron frame	Bronze bushing 1/2" x 9/16" x 7/8"
Starter motor drive end bearing type	Bronze bushing	Bronze bushing	Bronze bushing	Bronze bushing
Starter motor drive end bearing size	3/4" x 13/16" x 23/32"	3/4" x 13/16" x 23/32"	3/4" x 13/16" x 23/32"	3/4" x 13/16" x 23/32"
Starter motor outboard bearing type	Bronze bushing	Bronze bushing	Bronze bushing	Bronze bushing
Starter motor outboard bearing size	9/16" x 5/8" x 3/4"	9/16" x 5/8" x 3/4"	9/16" x 5/8" x 3/4"	9/16" x 5/8" x 3/4"
Generator commutator end bearing type	Bronze bushing	Bronze bushing	Bronze bushing	N. D. Ball
Generator commutator end bearing size or Number	9/16" x 3/4" x 3/4"	9/16" x 3/4" x 3/4"	9/16" x 3/4" x 3/4"	#8503
Generator drive end bearing make or type	N. D. Ball	N. D. Ball	N. D. Ball	N. D. Ball
Generator drive end bearing size or number	#1203	#1203	#1203	#1203
Clutch throwout bearing make or type	Bearings Co. of America	Bearings Co. of America	Bearings Co. of America	Bearings Co. of America
Clutch throwout bearing size or number	C.T.D.S.-56	C.T.D.S.-56	C.T.D.S.-56	C.T.S.-66A
Transmission pocket or spigot bearing make or type	Hyatt Roller	Hyatt Roller	Hyatt Roller	Hyatt Roller
Transmission pocket or spigot bearing size or number	#1294780	#1294780	#1294780	#1294780

DETAILED SPECIFICATIONS—Cont'd

BEARINGS—Cont'd	Cadillac "61" LaSalle	Cadillac Sixty Special	Cadillac Fleetwood	Cadillac Sixteen
Clutch pilot bearing make or type	N. D. Ball	N. D. Ball	N. D. Ball	N. D. Ball
Transmission reverse idler bearing	Steel backed babbitt	Steel backed babbitt	Steel backed babbitt	Steel backed babbitt
Transmission main shaft front bearing make or type	N. D. Ball	N. D. Ball	N. D. Ball	N. D. Ball
Transmission main shaft rear bearing make or type	N. D. Ball	N. D. Ball	N. D. Ball	N. D. Ball
Transmission countershaft front bearing make or type	Needle bearing	Needle bearing	Needle bearing	Needle bearing
Transmission countershaft rear bearing make or type	Needle bearing	Needle bearing	Needle bearing	Needle bearing
Rear axle pinion shaft front bearing make or type	Timken Tapered Roller	Timken Tapered Roller	Timken Tapered Roller	Timken Tapered Roller
Rear axle pinion shaft rear bearing main or type	Timken Tapered Roller	Timken Tapered Roller	Timken Tapered Roller	Timken Tapered Roller
Differential bearing right make or type	Timken Tapered Roller	Timken Tapered Roller	Timken Tapered Roller	Timken Tapered Roller
Differential bearing left make or type	Timken Tapered Roller	Timken Tapered Roller	Timken Tapered Roller	Timken Tapered Roller
Rear wheel bearing make or type	N. D. Ball	N. D. Ball	N. D. Ball	N. D. Ball
Front wheel inner bearing make or type	N. D. Ball	N. D. Ball	N. D. Ball	N. D. Ball
Front wheel outer bearing make or type	N. D. Ball	N. D. Ball	N. D. Ball	N. D. Ball
Kingpin upper bearing make or type	Bronze bushing	Bronze bushing	Needle bearing	Needle bearing
Kingpin lower bearing make or type	Bronze bushing	Bronze bushing	Needle bearing	Needle bearing
Rear spring front bushing	Rubber	Rubber	Rubber	Rubber
Rear spring rear bushing	Rubber	11/16"—11 threaded x 2"	13/16"—11 threaded x 2¼"	13/16"—11 threaded x 2¼"
Rear spring shackle bolt—upper	Rubber	3½" U-type 11/16"—11 threaded	13/16" x 2 9/16" plain	13/16" x 2 9/16" plain
Rear spring shackle bolt—lower	Rubber	—	13/16"—11 x 3 9/16" threaded	13/16"—11 x 3 9/16" threaded

PRINTED IN U. S. A. SEPT. 1938 6.5M G. PRESS

WIRE-O Binding (Pat.Pending) Michigan Bookbinding Co., Detroit

1939 CADILLAC-LaSALLE ACCESSORY GROUPS

	PRICES
LaSalle Group B	$20.25
LaSalle Group BG	29.50
LaSalle Group AR5	27.75
LaSalle Group ARG5	37.00
LaSalle Group AR6	29.25
LaSalle Group ARG6	38.50
LaSalle Group AD	36.25
LaSalle Group ADG	45.50
Cadillac Group A	28.50

●

ACCESSORIES INCLUDED IN GROUPS

B
- Flexible Wheel
- Automatic Lighter
- License Frames

BG
- Flexible Wheel
- Automatic Lighter
- License Frames
- Grille Guard

AR5
- Flexible Wheel
- Automatic Lighter
- License Frames
- 5 Trim Rings

ARG5
- Flexible Wheel
- Automatic Lighter
- License Frames
- 5 Trim Rings
- Grille Guard

AR6
- Flexible Wheel
- Automatic Lighter
- License Frames
- 6 Trim Rings

ARG6
- Flexible Wheel
- Automatic Lighter
- License Frames
- 6 Trim Rings
- Grille Guard

AD
- Flexible Wheel
- Automatic Lighter
- License Frames
- 4 Wheel Discs

ADG
- Flexible Wheel
- Automatic Lighter
- License Frames
- 4 Wheel Discs
- Grille Guard

A
- Grille Guard
- License Frames
- 4 Wheel Discs

PRINTED IN U. S. A.

ACCESSORY PRICE LIST

CADILLAC MOTOR CAR DIVISION
General Motors Sales Corporation
DETROIT, MICH

DECEMBER 1. 1938

— 1937 —

CADILLAC-LaSALLE
ACCESSORIES

1939

AUTOMATIC BATTERY FILLER	
All series except 39-50	$ 7.50
AUTOMATIC CIGARETTE LIGHTER	
39 LaSalle and all 38 series	2.25
COOL CUSHION	
All series	2.95
FLEXIBLE STEERING WHEEL	
LaSalle, series 39-50	15.00
FOG AND ADVERSE WEATHER LIGHTS	
All series (pair)	14.50
GLARE SHIELD	
All series	1.50
GRILLE GUARD	
All 39-38-37 series	9.50
HEATER-DEFROSTERS	
Ventilating Heater-Defroster Series 39-50-61, 60S, 75	31.50
Ventilating Heater-Defroster Series 39-90	36.50
Rear Compartment Heater Series 39-38-75, 90	32.50
Heater-Defroster Series 39 and previous	26.50
HINGE MIRROR	
series	4.50
ILLUMINATED VANITY MIRROR	
All 39-38 series	6.50
LICENSE FRAMES	
All 39 series (pair)	3.00
LUGGAGE	
Gentlemen's Aviator	35.00
Ladies' Aviatrix	35.00
Wardrolette	42.50
Sport Bag	15.00
Aerolite Case	18.50
MISCELLANEOUS	
Blue Coral	2.50
Blue Coral Sealer	1.00
Blue Coral Prophylactic	$ 1.00
Dust Mit	.65
Body Polish (pint)	.60
Bulb Kit	1.10
Chrome Cleaner (pint)	.60
Fabric Cleaner (pint)	.60
Flashlight	1.50
Glass Cleaner	.45
Handy Brush	2.00
Moto-Pack	6.85
Radiator Inhibitor	.75
Tire Gauge	1.00
White Sidewall Tire Cleaner (pint)	.60
NO-ROL	
All 39-38 series	11.00
RADIATOR INSECT SCREENS	
LaSalle series 38-37-50	2.25
Cadillac series 38-37-60, 65, 75	2.50
RADIO	
Automatic for all 39 series, installed complete with Vacuum or Running Board Aerial	69.50
Rear Compartment Radio ($79.50 price does not include body preparation fee averaging $30.00)	79.50
ROBES	
Fleetwood cloth and crushed plush or alpaca	50.00
Pillow to match	8.00
Monograms	5.50
Double Alpaca robe in brown or gray	30.00
Alpaca and plush robe in brown or gray	30.00
SCUFF PADS	
All 39-38-37 series	1.50
SEAT COVERS	
All series (per seat)	8.25
SPOTLIGHT	
All series	18.50
WHEEL DISC—(Chrome)	
All 39 series (each)	4.00
WHEEL TRIM RINGS	
All 39 series (each)	1.50
WINDSHIELD WASHER	
All 39-38 series	5.75
Winter solution	.25

ALL PRICES INCLUDE INSTALLATION BUT ARE LESS LOCAL TAXES

COLOR COMBINATIONS (Continued)

Series 39-50, 60S, 61, 75, 90

Comb. Code No.	Color Name	Color No.	Mfgr.	Color Name	Matching Color No.
	BODY AND SHEET METAL			**WHEELS**	
51	Black	20498	R & M	Black Triton Green Corsican Red	94-005 94-20957 94-20940
52	Antoinette Blue	22290	R & M	Antoinette Blue	94-20871
53	Cavern Green	023355	R & M	Triton Green	94-20957
54	Marblehead Gray	20198	R & M	Corsican Red	92-20940
55	Dragon Blue Iridescent	P.S.261	R & M	Kashan Blue	94-3888
56	Piedmont Green Iridescent	P.S.371	R & M	Piedmont Green Iridescent	182-20948
57	Franconia Beige Iridescent	P.S.875	R & M	Franconia Beige Iridescent	182-20951
58	Ox-Blood Maroon Iridescent	P.S.608	R & M	Ox-Blood Maroon Iridescent	182-20955
59	Monterey Blue Iridescent	P.S.258	R & M	Monterey Blue Iridescent	182-20947
60	Trinidad Gray Iridescent	P.S.183	R & M	Corsican Red	92-20940
61	Empire Green	023354	R & M	Empire Green	92-20929
62	Kingston Gray	020161	R & M	Kingston Gray	92-20894
63	†Ludington Green	23459	R & M	Ludington Green	94-20952
	‡English Gray	21147	R & M		
64	†Silver French Gray Iridescent	P.S.195	R & M	Monterey Blue Iridescent	182-20947
	‡Monterey Blue Iridescent	P.S.258	R & M		
	Steering Column, Wheel Hub, Bracket, Gear Shift Housing Tube, Lever and Hand Brake	All Series		Cocoa Brown	242-53199

Series 40-50, 52, 60S, 62, 72, 75, 90

1	Black Body Color — Except styles 40-5011, 11A, 19, 19A, 27, 67, 40-5219, 27	20498	R & M	Black Triton Green Vincennes Red	94-005 94-20957 94-3618
	Black Body Color — Styles 40-5011, 11A, 19, 19A, 27, 67, 40-5219, 27	253-2122	Dupont		
	Sheet Metal Color—All Styles	2532122	Dupont		
2	Antoinette Blue	22290	R & M	Antoinette Blue	94-20871
3	Cavern Green	023355	R & M	Triton Green	94-20957
4	Knickerbocker Gray	020185	R & M	Vincennes Red	94-3618
5	Marquette Gray	020182	R & M	Vincennes Red	94-3618
6	Long Key Green Iridescent	P.S.389	R & M	Long Key Green	182-21341
7	Beaver Brown Iridescent	P.S.860	R & M	Beaver Brown	182-21340
9	Corlear Blue Iridescent	P.S.297	R & M	Corlear Blue	182-21339
10	Homer Gray Iridescent	P.S.170	R & M	Vincennes Red	94-3618
11	Oxblood Maroon Iridescent	P.S.608	R & M	Oxblood Maroon	182-20955
13	†Chicory Green Iridescent	P.S.367	R & M	Chicory Green	182-21336
	‡Evergreen Iridescent	P.S.328	R & M		
14	†Harbormist Gray Iridescent	P.S.1123	R & M	Submarine Gray	182-21338
	‡Submarine Gray Iridescent	P.S.1124	R & M		
15	†Beaumont Blue Iridescent	P.S.262	R & M	Beaumont Blue	182-21342
	‡Pilot Blue Iridescent	P.S.233	R & M		
16	†Silver French Gray Iridescent	P.S.195	R & M	Luzon Green	182-21337
	‡Luzon Green Iridescent	P.S.391	R & M		

The interior fittings and controls on Series 40-50, 52, 60S, 62 cars are toned to match the upholstery in the body. Parts made of plastic and certain painted parts are identified in the listing as gray and tan. Below is a chart indicating the color of parts used with the various trim combinations.

Two shades of both gray and tan colors are used on interior painted parts. With exception of the horn button, only the late type color parts will be furnished. Parts required for the first type color jobs and for Series 40-72, 75, 90 cars must be refinished locally to match the balance of the interior parts.

SERIES		GRAY	TAN
40-50, 52, 60S, 62	First No. cars	To match trim combination No. 22, 23, 25, 27, 27A, 30, 41, 46, 53, 53-7, 54 Dexter Gray 242-9989 Hermes Gray 202-32563	To match trim combination No. 21, 24, 26, 26A, 28, 28A, 29, 44, 51, 51-4, 51-8, 52, 55, 56 Canterbury Beige 202-53095 Seaforth Beige 202-53098 Carnelian Brown 202-53248
40-72, 75, 90	After No. cars All cars		

† Belt Moulding and above.

‡ Below Belt Moulding.

* Code Comb. No. will be found on Body Plate on dash.

UPHOLSTERY CHART NO. 1

Series 39-50, 60S, 61,75, 90

Always use trim (upholstery) chart when ordering yardage upholstery. U.S. list and suggested General Trade Net prices on trim material are shown on pages immediately following upholstery charts in group 34.0000. When ordering specify group numbers as shown on price list.

Trim Code No.	Description of Cushion and Back Rest Material	Cushion and Back Rest Material	Sidewall Material	Headlining Material
30	Tan Pattern Cloth - Series 39-50 .	51T139 4083725	53T139 ...4083727	54T139 ...4082150
31	Tan Ribbed Cloth - Series 39-50 . .	52T139 4083726	53T139 ...4083727	54T139 ...4082150
32	Gray Pattern Cloth - Series 39-50	55T139 4083728	57T139 ...4083730	58T139 ...4082099
33	Gray Ribbed Cloth - Series 39-50 .	56T139 4083729	57T139 ...4083730	58T139 ...4082099
34	Blue Leather - Series 39-50,61 . .	5T1339 4074240		
35	Red Leather - Series 39-50,61 . . .	6T1339 4074242		
36	Black Leather - Series 39-50,61 . .	1T1339 4118109		
38	Gray Leather - Series 39-50,61 . .	3T1339 4074236		
39	Green Leather - Series 39-50,61. .	4T1339 4074238		
40	Brown Leather - Series 39-50,61 .	2T1339 4089880		
41	Tan Novelty Bedford Cord - Series 39-60S,61,75	63T139 4089798	64T139 ...4089800	67T139 ...4082208
42	Tan Plain Cloth - Series 39-60S,61,75	66T139 4089820	64T139 ...4089800	67T139 ...4082208
44	Gray Novelty Bedford Cloth - Series 39-60S,61,75	60T139 4075030	61T139 ...4089799	20T139 ...4082207
46	Tan Striped Broadcloth - Series 39-60S,61,75	68T139 4089824	68T139 ...4089824	69T139 ...4089825
W4901	Brown Pattern Cloth - Series 39-75,90	24T139 or W4901 4075035	26T139 ...4075037	27T139 ...4083742
W4902	Brown Bedford Cord Cloth - Series 39-75,90	25T139 or W4902 4075036	26T139 ...4075037	27T139 ...4083742
W4903	Brown Plain Cloth - Series 39-75,90	26T139 or W4903 4075037	26T139 ...4075037	27T139 ...4083742
W4905	Gray Pattern Cloth - Series 39-75,90	33T139 or W4905 4075039	36T139 ...4075041	37T139 ...4083752
W4906	Gray Bedford Cord Cloth - Series 39-75,90	35T139 or W4906 4075040	36T139 ...4075041	37T139 ...4083752
W4907	Gray Plain Cloth - Series 39-75,90	36T139 or W4907 4075041	36T139 ...4075041	37T139 ...4083752
W4909	Tan Plain Cloth - Series 39-75,90.	29T139 or W4909 4075038	29T139 ...4075038	30T139 ...4083745
W4931	Beige Plain Cloth - Series 39-75,90	31T139 or W4931 4083746	31T139 ...4083746	32T139 ...4083747
W4934	Tan Crenelure Cloth - Series 39-75,90	28T139 or W4934 4083743	29T139 ...4075038	30T139 ...4083745
W4935	Gray Crenelure Cloth - Series 39-75,90	34T139 or W4935 4083749	36T139 ...4075041	37T139 ...4083752
E.O.814	Black Leather - Series 39-75,90 . .	7T1339 or E.O.814 ..4068671		
E.O.815	Tan Leather - Series 39-75,90 . . .	8T1339 or E.O.815 ..4068672		
E.O.816	Green Leather - Series 39-75,90. .	10T1339 or E.O.816 ..4068674		
E.O.817	Gray Leather - Series 39-75,90 . .	9T1339 or E.O.817 ..4068673		
B.L.769	Green Leather - Series 39-90. . . .	25T1339 or B.L.769 ..4083767		
B.L.771	Tan Leather - Series 39-90	23T1339 or B.L.771 ..4083765		

LaSalle Accessory Groups

★ B
Flexible Wheel
Automatic Lighter
License Frames
Group Price.....$20.25

★ AD
Flexible Wheel
Automatic Lighter
License Frames
Wheel Discs (4)
Group Price.....$36.25

★ AR5
Flexible Wheel
Automatic Lighter
License Frames
Trim Rings (5)
Group Price.....$27.75

★ AR6
Flexible Wheel
Automatic Lighter
License Frames
Trim Rings (6)
Group Price.....$29.25

Cadillac Accessories

Automatic Radio	$69.50
Ventilating Heater Defroster (except Series 90)	31.50
Ventilating Heater Defroster (Series 90)	36.50
Heater, Rear Compartment (Fleetwood only)	32.50
Flexible Steering Wheel	15.00
Wheel Discs (each)	4.00
Wheel Trim Rings (each)	1.50
License Frames (pair)	3.00
Automatic Cigarette Lighter	2.25
No-Rol	11.00
Fog and Adverse Weather Lights	14.50
Spotlight	18.50
Windshield Washer	5.75
Hinge Mirror	4.50
Illuminated Vanity Mirror	6.50
Automatic Battery Filler (except Series 50)	7.50
Seat Covers (each seat)	8.25
Scuff Pads	1.50
Moto-Pack	6.85
Fleetwood Robe, Cloth and Crushed Plush or Alpaca	50.00
Double Alpaca Robe	30.00
Alpaca and Plush Robe	30.00
Luggage—	
Wardrolette	42.50
Ladies' Aviatrix	35.00
Gentlemen's Aviator	35.00
Aerolite Case	18.50
Sport Bag	15.00

CADILLAC LASALLE

1939

ADVERTISED DELIVERED

PRICES

AT FACTORY, DETROIT, MICH.

Transportation, state and local sales taxes to be added

All prices subject to change without notice

OCTOBER 18, 1938

CADILLAC MOTOR CAR DIVISION
General Motors Sales Corporation
DETROIT, MICHIGAN, U.S.A.

Style Number	BODY STYLES	LaSalle 39-50 120" Wheelbase	Cadillac 39-61 126" Wheelbase	Cadillac 39-60—Special 127" Wheelbase
27	2-4 Coupe	$1240.00	$1610.00	—
11	*5-Two-Door Touring Sedan	1280.00	—	—
19	*5-Four-Door Touring Sedan	1320.00	1680.00	$2090.00
67	2-4 Convertible Coupe	1395.00	1770.00	—
29	5-Convertible Sedan (Trunk)	1800.00	2170.00	—
	6 Wheels, Fenderwells, Tire Covers	95.00	100.00	100.00
	Right Hand Fenderwell	40.00	42.00	42.00
	*Sedane Turret Top Roof	37.50	37.50	85.00
	White Sidewall Tires (Per Tire)	4.00	4.00	4.00
	Running Boards	Optional No Charge	Optional No Charge	Not Available
	Standard Tire Equipment	7.00-16 Royal or Firestone 4 Ply Black tires.		

Style Number	FLEETWOOD BODY STYLES	Cadillac Fleetwood 39-75 141" Wheelbase	Cadillac Sixteen 39-90 141" Wheelbase
19	5-Four-Door Touring Sedan	$2995.00	$5140.00
23-L	8-Business Touring Sedan	3105.00	—
19-F	5-Touring Sedan—Division	3155.00	5215.00
23	7-Touring Sedan	3210.00	5270.00
33-L	8-Business Touring Imperial Sedan	3260.00	—
57	2-4 Coupe	3280.00	5340.00
33	7-Touring Imperial Sedan	3360.00	5420.00
67	2-4 Convertible Coupe	3380.00	5440.00
57-B	5-Coupe	3380.00	5440.00
39	5-Town Sedan (Trunk)	3635.00	5695.00
29	5-Convertible Sedan (Trunk)	3945.00	6000.00
59	5-Formal Sedan (Trunk)	3995.00	6055.00
33-F	7-Formal Sedan (Trunk)	3995.00	6055.00
53	Town Car (Trunk)	5115.00	7175.00
	6 Wheels, Fenderwells, Tire Covers	120.00	130.00
	Right Hand Fenderwell	50.00	55.00
	White Sidewall Tires (Per Tire)	6.00	6.00
	Standard Tire Equipment	7.50-16 Royal or Firestone 6 Ply Black tires.	

Bulletin No. 22
October 1, 1938

1938

CADILLAC MOTO-PACK FOR ALL SERIES



CADILLAC Moto-Pack is one of the most efficient and complete clean-up and repair kits that has ever been developed. Consisting of a flashlight, tire gauge, dust mit, bulb kit, whisk broom and buffer, and one can each of Cadillac Body Polish, Fabric Cleaner, and Chromium Cleaner, it is needless to state its high value to any motorist.

The flashlight is enclosed in a sturdy chromium case with a brilliant silvered reflector. The fact that this light has two dry cells and a large 3.8 candlepower bulb makes it indispensable for fixing tires, moving luggage, or illuminating distant sign posts at night.

As insufficient tire pressure increases tire wear and reduces riding quality, a tire gauge is a necessity. The chromium tire gauge included in the Moto-Pack has an easily read brass scale calibrated in pounds and may be used for tire pressures up to 55 pounds. A handy knob on the back of the gauge may be used to deflate the tire when it is found to have excessive pressure.

A dust mit is necessary for keeping the car fresh and clean inside or out. It is of a handy construction in that the back of the mit is a glove in which the hand may be slipped and the dusting done in an easy, normal manner. The long, heavy strands of the mit instantly pick up all particles of dust and dirt on the car's surface and do not relinquish them until the mit is shaken out.

The Bulb Kit contains bulbs to meet with every emergency. Included in the kit are 6 bulbs providing replacements for the headlights, parking lights, tail lights, dash lights and clock lights. As special type bulbs are required for the Multi-Beam headlights, it is essential that the car owner have a set of these bulbs when traveling in sparsely populated areas where they might not be available.

The whisk broom in its attractive brown leather case that also includes a sheepskin buffer is an essential requirement for keeping the upholstery and carpet of the car clean as well as for brushing the owner's clothes and shining his shoes after a long journey. The stiff bristles of the whisk broom are firmly embedded in the leather covered handle where they will not come out. The Cadillac LaSalle Crest is embossed in gold on the leather holder.

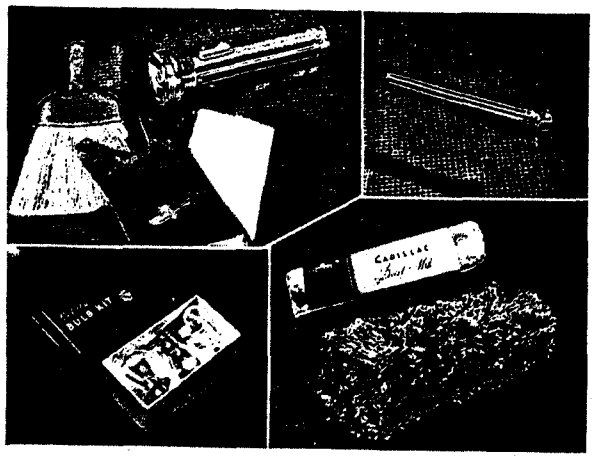

One can each of Cadillac Body Polish, Chromium Cleaner and Fabric Cleaner effectively rounds out the Moto-Pack so that it is the most complete clean-up kit ever introduced for the automobile and for the home as well. These polishes and cleaners may be used on fabric-covered furniture, silverware, and chromium surfaces.

$6.85 Local Tax Extra

All of the items in the Moto-Pack may be purchased separately under the part numbers listed in the ordering specifications.

Bulletin No. 22
October 1, 1938

1938

CADILLAC MOTO-PACK FOR ALL SERIES



CADILLAC Moto-Pack is one of the most efficient and complete clean-up and repair kits that has ever been developed. Consisting of a flashlight, tire gauge, dust mit, bulb kit, whisk broom and buffer, and one can each of Cadillac Body Polish, Fabric Cleaner, and Chromium Cleaner, it is needless to state its high value to any motorist.

The flashlight is enclosed in a sturdy chromium case with a brilliant silvered reflector. The fact that this light has two dry cells and a large 3.8 candlepower bulb makes it indispensable for fixing tires, moving luggage, or illuminating distant sign posts at night.

As insufficient tire pressure increases tire wear and reduces riding quality, a tire gauge is a necessity. The chromium tire gauge included in the Moto-Pack has an easily read brass scale calibrated in pounds and may be used for tire pressures up to 55 pounds. A handy knob on the back of the gauge may be used to deflate the tire when it is found to have excessive pressure.

A dust mit is necessary for keeping the car fresh and clean inside or out. It is of a handy construction in that the back of the mit is a glove in which the hand may be slipped and the dusting done in an easy, normal manner. The long, heavy strands of the mit instantly pick up all particles of dust and dirt on the car's surface and do not relinquish them until the mit is shaken out.

The Bulb Kit contains bulbs to meet with every emergency. Included in the kit are 6 bulbs providing replacements for the headlights, parking lights, tail lights, dash lights and clock lights. As special type bulbs are required for the Multi-Beam headlights, it is essential that the car owner have a set of these bulbs when traveling in sparsely populated areas where they might not be available.

The whisk broom in its attractive brown leather case that also includes a sheepskin buffer is an essential requirement for keeping the upholstery and carpet of the car clean as well as for brushing the owner's clothes and shining his shoes after a long journey. The stiff bristles of the whisk broom are firmly embedded in the leather covered handle where they will not come out. The Cadillac LaSalle Crest is embossed in gold on the leather holder.

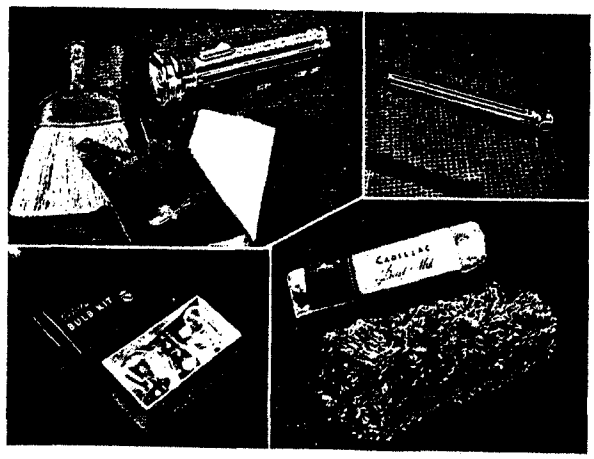

One can each of Cadillac Body Polish, Chromium Cleaner and Fabric Cleaner effectively rounds out the Moto-Pack so that it is the most complete clean-up kit ever introduced for the automobile and for the home as well. These polishes and cleaners may be used on fabric-covered furniture, silverware, and chromium surfaces.

$6.85 Local Tax Extra

All of the items in the Moto-Pack may be purchased separately under the part numbers listed in the ordering specifications.

Your

CADILLAC

An Owner's Manual

covering the

CADILLAC V-8

Series 39-60S, 61 and 75

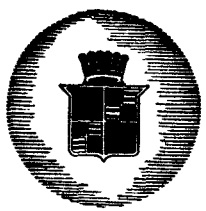

Copyright 1938 by
GENERAL MOTORS SALES CORP.
Printed in U. S. A.

FILE COPY
DO NOT REMOVE

You are a valued customer of the Cadillac Motor Car Division. We are anxious, therefore, that you secure the best of service from your car, and we have prepared this book to help you. We welcome any suggestions or questions* at any time regarding this book, our Authorized Service Stations, or the car itself.

Service Department
CADILLAC MOTOR CAR DIVISION
General Motors Sales Corp.

*In writing to us on matters pertaining to your car, always give the engine number. The engine number location is described on page 56.

As the Owner of a new Cadillac

You will want to know—

RIGHT AWAY

Page

The Break-in Period 5
The Right Gasoline—The Right Engine Oil—Cooling Liquid Level—Tire Pressure

Instruments and Controls 10
Seat Adjustment—Rear View Mirror—Gasoline Gauge — Ammeter — Oil Pressure Gauge — Temperature Indicator — Clock — Transmission Control — Starting the Engine — Cold Weather Operation — Lighting Controls — Locks and Keys — Door Locks — Ventilation — Sunshine Turret Top — Radio

Cadillac-LaSalle Service 19
Authorized Service Stations—Owner Service Policy—Manufacturer's Warranty — Tire and Battery Warranties

VERY SOON

Suggestions for Safer Driving 24
Carbon Monoxide—Starting the Car—Stopping the Car—Night Driving—Winter Driving—Mountain Driving Touring—High Speed Driving—Gasoline Economy—Tire Life

Lubrication 36
Authorized Lubrication—Engine Oil Recommendations—Lubrication Schedule—Chassis Lubrication—Lubricants—Lubricant Capacities—Other Operations

Maintenance Suggestions 43
Body—Engine—Cooling System—Anti-Freeze—Tools—Wheels and Tires—Electrical—Lamp Bulbs—Storing the Car

License Data 56

The Break-In Period

Strictly speaking, your Cadillac car does not require a break-in period, for it is never necessary to drive at speeds below a specified maximum. We nevertheless urge that you drive at moderate speeds during the first 500 miles, even though it is only to accustom yourself to the handling of the car.

One definite precaution must be observed during this period. When driving a new car at speeds over 40 miles per hour, let up on the accelerator for ten or twelve seconds at frequent intervals. The important thing is not miles per hour, but avoiding continuous high speed.

A newly-built car will not develop its maximum speed and power or demonstrate its best fuel and oil economy during the first 2,000 miles. Regardless of how carefully an engine is built, this "running-in" period always improves its performance. Keep this in mind when checking performance during the first few weeks of ownership, and do not attempt maximum speeds until after 2,000 miles.

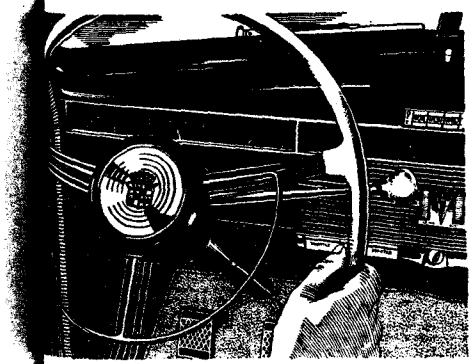

The Right Gasoline

The Cadillac V-8 engines provide all the benefits of modern high-compression design, which means that they operate most efficiently with ethylized or other high-octane fuel. The series 39-75 engine has a particularly high compression ratio, and it accordingly requires a premium grade fuel, such as "Ethyl" gasoline.

The series 39-60S and 61 engines are so designed and calibrated that they will perform satisfactorily with 70-octane fuel, which is the rating of the so-called "regular" grade of gasoline marketed by most refiners in the United States. Premium fuels having octane ratings well above 70, if used with an advanced spark setting, will permit these engines to develop more power.

Fuels with octane ratings less than those recommended above can be used without harm, but they will not permit the engines to develop their full power, and they will usually cause "knock" or "ping" unless the spark is retarded. Ignition timing and "ping" are explained on page 46.

The most important thing is to buy your fuel from a reputable company in order to insure uniform quality and freedom from impurities that might clog the strainers or cause harmful chemical action in the engine. Your authorized Cadillac-LaSalle Service Station can advise you regarding the most suitable grades of gasoline available locally, or adjust your engine for the grade of fuel you prefer to use.

The gasoline tank capacities are:

Series 39-60S.....22 gallons
Series 39-61.....22 gallons
Series 39-75.....26.5 gallons

The Right Engine Oil

During the first 1,000 miles, the lighter grades of engine oil must be used. When it is necessary to add oil use nothing heavier than 10-W in winter or 20-W in summer.

At the end of 1,000 miles, the oil originally in the engine should be drained and replaced with oil of the correct grade. The grade depends upon the season of the year and the type of driving, as explained on page 37.

In checking the engine oil level between oil changes, there is only one safe rule: ***Check the oil level every time gasoline is purchased and add oil as required.*** Oil will not be required every time, but it is better to check the level unnecessarily a dozen times than to miss the one time that more oil is needed.

The combination oil filler cap and plunger type gauge is on the left side of the crankcase.* Add oil whenever the level is down to the 6-quart mark, but add ***only enough*** to bring the level up to the 7-quart mark.

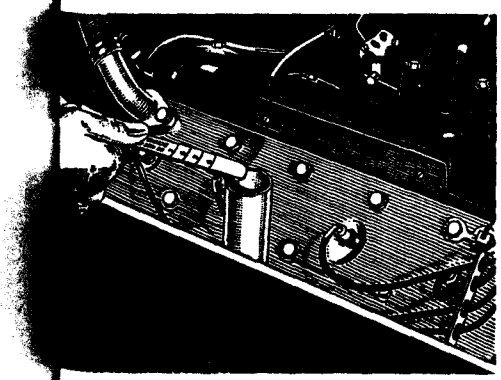

*Raising the hood is explained on page 8.

Cooling Liquid Level

The radiator filler cap is also located under the hood, for convenience in checking the liquid level when checking the oil. The level should be checked at least once every week or ten days, except on long tours, when it should be checked daily.

Ordinarily, only water needs to be added at these times, although, if any considerable quantity is required during cold weather, the strength of the anti-freeze solution should be tested. When the cooling system is drained and refilled, it is necessary to use anti-rust solutions in summer and anti-freeze in winter. The correct solutions for these purposes are discussed on page 50.

Caution—When removing the filler cap from a hot engine, rotate the cap toward the left until the stop is reached. This is the vented position, which allows steam to escape. Keep in this position until the pressure in the system has been relieved, then turn more forcibly to the left to remove. Turn the cap all the way to the right when reinstalling.

Raising the Hood is accomplished by tilting the radiator ornament back. This releases both the regular and the safety catch. Counterbalancing springs hold the hood in its raised position. When lowering the hood, make sure the catch is fastened securely.

FILE COPY
DO NOT REMOVE

Tire Pressure

The tire pressure is the fourth item requiring frequent attention. All tires, including spares, should be checked every week or ten days,* and maintained at the correct pressures:

Series 39-60S .....28 pounds minimum
Series 39-61.....26 pounds minimum
Series 39-75.....32 pounds minimum

Check the pressure when the tires are cold, preferably in the morning, and never after a fast run. Heat developed on fast runs or from hot pavements increases the pressures and they decrease again when the tires cool.

Frequent checking is essential with low pressure tires, as variations of only a few pounds make an appreciable difference in riding qualities and tire wear.

Always unlock the rear compartment lid or the fender-well tire covers, and have the attendant check the spare tire while he is checking the others.

The procedure for changing wheels when a tire is flat is given on page 52.

◆ ◆ ◆

The regular attention required by your Cadillac car, in addition to the four topics just covered, includes lubrication at 1,000 mile intervals and a few items of general care, all of which are explained on pages 36 to 42. Read these pages before your car has traveled 1,000 miles.

*When touring and covering several hundred miles a day, check the tire pressure every day or two.

Instruments and Controls

Comfort and convenience for the driver contribute to greater safety, as well as to more enjoyable driving. The Cadillac driver's compartment has been designed with this in mind. Note the following:

The ignition switch, starter button, and lighting controls —the radio, when installed—are convenient to the driver's right or left hand, and the instrument dials are grouped in front of the driver for best visibility. For safety, all controls except the headlamp switch are recessed in the lower edge of the board below the radio grille.

The transmission control and hand brake levers are out of the way, yet within easy reach of the driver.

The seat adjustment is easily made by lifting the catch on the left front of the seat base and sliding the seat backward or forward to the most comfortable position. On long trips, changing the adjustment occasionally will be found helpful in avoiding fatigue.

The ***rear view mirror*** has a universal mounting which permits adjusting it to any angle required for maximum vision. Furthermore, the mirror is mounted in such a way that it can be readily turned either to a high or low position.

The gasoline gauge is operated electrically. It indicates the quantity of fuel in the tank ***only when the ignition is turned on.*** When the ignition is turned off, the pointer drops beyond the "empty" mark.

In place of the ***ammeter,*** a battery charge or discharge indicator is used. This gauge should indicate "charge" as soon as the car is running 15 to 20 miles an hour. If it fails to do so, or if it shows a discharge when the engine is not running and no electrical equipment is in use, the cause should be investigated immediately.

The oil pressure gauge should always show pressure while the engine is running. If it does not, stop the engine ***at once*** and investigate the cause.

The temperature indicator, which shows the temperature of the fluid in the cylinder blocks, is operated electrically and functions only when the ignition is turned on.

The needle should register within the "normal" range except on long, hard drives in summer weather, when it may register "hot." This condition need not cause alarm, as the pressure-operated overflow will normally prevent water losses at temperatures up to 229°F.

When the engine does run hot on long drives, it is important to check the oil and water levels frequently. Observe the precaution given on page 8 when checking the water level.

If the indicator should show "hot" during short runs under normal driving conditions, the cause should be investigated.

The ***clock*** is electrically driven and fully automatic in operation. Interruptions in the current will naturally cause the clock to stop. After the current has been reconnected, it is necessary merely to reset the hands, as the resetting mechanism will again put the clock in operation. The resetting knob and the regulating knob are inside the glove compartment on the back of the clock.

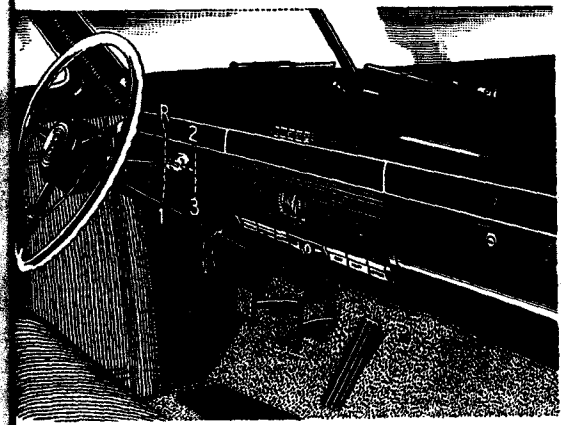

The transmission control lever is operated in the conventional manner. Lift the knob and move rearward to engage low gear or forward to engage reverse; depress the knob and move it forward or rearward to engage second and high gears respectively.

Starting the Engine

Automatic features have greatly simplified the starting procedure. Depress the clutch pedal, switch on the ignition, and press the starter button at the center of the panel. Built-in carburetor controls provide the correct starting mixture and idling speed.

The engine should start within 5 to 25 seconds of cranking. If it does not, release the starter button and look for the cause:

Check the contents of the gasoline tank.

See that the throttle control is pushed in to the dash, especially in cold weather.

Make sure the ignition key is turned all the way on.

Crank the engine with the accelerator pedal held all the way down to open the throttle fully. This will correct any tendencies to a flooded or over-rich condition.

Do not run down the battery by too much use of the starting motor when the engine does not start readily. First find the cause; otherwise the battery may be run down sufficiently to make starting impossible.

If a **hot** engine is hard to start, open the throttle fully by pushing the accelerator slowly to the floorboards, and then crank the engine. Release the accelerator after the engine starts.

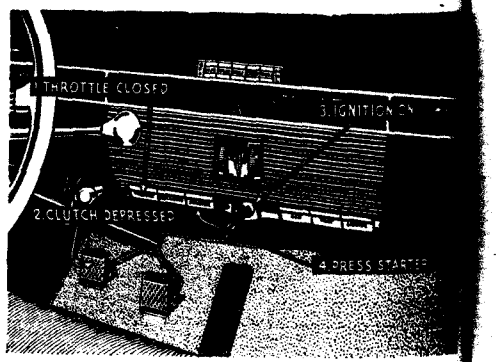

Cold Weather Operation

Winter weather brings no inconvenience to the Cadillac owner who has his car properly prepared for low temperatures and who follows correct procedures in starting and driving. Winter preparation of your Cadillac consists of the following:

Adequate servicing of the cooling system for cold weather, including the use of an approved anti-freeze (Page 49).

Draining the engine crankcase and refilling with 10-W or 20-W engine oil, according to the lowest temperature expected, as explained on page 37.

Cleaning the gasoline lines and filter (Page 48).

Checking up on the mechanical condition of the engine, particularly the valves and ignition, to make certain that the engine is properly tuned.

Inspecting the storage battery to see that it is fully charged, that the connections are clean and tight, and that the charging rate is adequate.

Starting the engine in cold weather requires the same procedure as at other times, but with emphasis on the following precautions:

1. Use of 10-W or 20-W oil to assure free cranking.
2. Always depressing the clutch pedal when cranking the engine, to relieve the starter of the load of turning the transmission gears.
3. Making sure by regular tests that the battery is kept fully charged or nearly so.

After the engine has started, it is a good plan to engage the clutch gradually while the transmission is in neutral to permit the engine to free up the lubricant before the car is driven. ***Always let a cold engine warm up for at least 30 seconds before driving the car.*** Do not open the throttle suddenly to race the engine during this period.

Cold weather driving can be made much more comfortable and safer by the installation of a good car heater and defroster. Your Cadillac-LaSalle dealer can supply you with an approved type of heater-defroster. Ask to see these heaters.

Lighting Controls

Two types of lighting are available in the driving compartment—the dials of all instruments are glow-lighted, while direct light for the ignition switch is provided by the lock lamp.

The two-position switch for these lamps is mounted on the instrument board flange below the lettering "Inst. Lights." In the left-hand position, the instrument lamps are lighted, but only if the headlamps are also turned on. In the right-hand position, the instrument lamps and lock lamp are lighted, regardless of the headlamps.

The interior of the glove compartment is lighted by a lamp that is turned on automatically when the door is opened and turned off when the door is closed. The trunk at the rear also has an automatic light.

The headlamps are controlled by two switches: a three position button at the left of the instrument panel and a foot switch below the clutch pedal. The three headlight beams and the lighting switch positions are illustrated clearly in the drawing on this page.

When driving on ***lighted*** highways, set the hand control in the second position and select the "city" beam with the foot switch.

When driving on unlighted

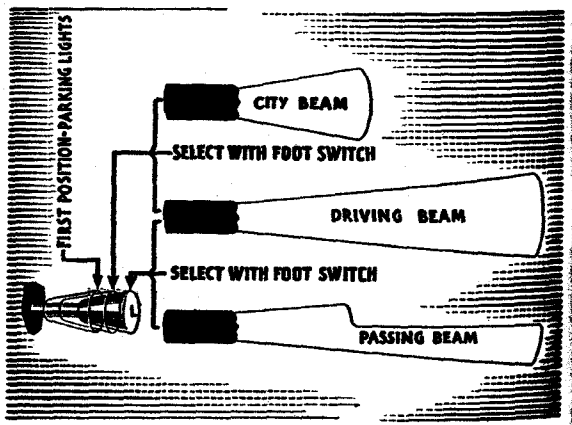

FILE COPY
DO NOT REMOVE

straight roads, set the hand control in the third position. Select the "driving" beam with the foot switch, but change to "passing" whenever a car from the opposite direction approaches within 500 feet.

When driving on unlighted ***winding*** roads, set the hand control in the second position, and use the foot switch to select the "driving" beam and to switch to the "city" beam whenever another car approaches. The "city" beam is the only safe passing beam for winding roads. (See drawing below.)

A beam indicator in the speedometer face lights up whenever the "driving" beam is in use to warn the driver to switch to a passing beam when another car approaches.

Courtesy and safety both demand the use of passing beams exactly as outlined. We urge every Cadillac owner to observe these instructions faithfully, as carelessness in these matters is leading authorities to consider further restrictions of headlamp driving beams. Please cooperate in safe use of adequate lighting equipment.

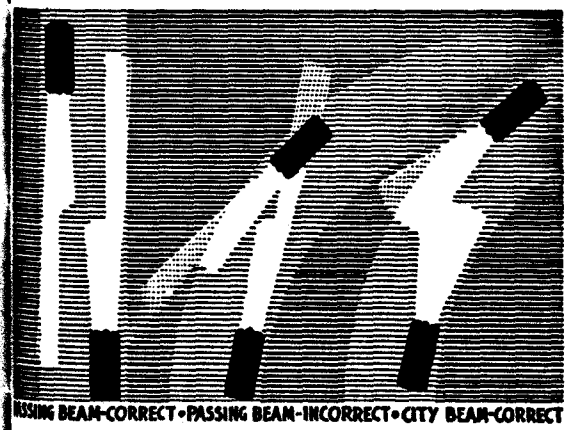

Locks and Keys

Maximum protection is provided by the Cadillac system of locks and keys. Two sets of two keys each are furnished with the car. The octagonal handled key is the driver's key; it operates the front doors, the ignition switch, and the spare wheel lock on cars equipped with fenderwells.

The round-handled key operates the compartment locks, including those for the instrument panel compartment, the rear deck on Coupes, and the trunk compartment on Sedans. The advantage of this arrangement is that baggage can be kept locked while the car is left with public garage or parking lot attendants.

As a protection against unauthorized persons securing keys, the key numbers do not appear either on the keys or the face of the locks, but on small metal slugs fastened in the keys. Mark these key numbers on your Certificate of Title or Bill of Sale, as soon as you take delivery of the car, and have your dealer knock these number slugs out of the keys and destroy them. If this is not done, you lose part of your protection.

Duplicate keys, if required, can be ordered by key numbers from the nearest Authorized Cadillac-LaSalle Service Station. If the key number is not known, you must order by car engine number from your own dealer or from the Cadillac Motor Car Division, Detroit.

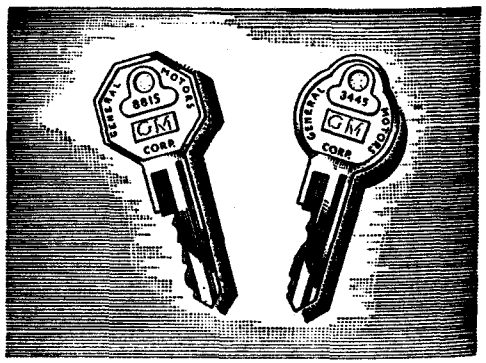

Door Locks—The doors can all be locked from the inside by pushing down the small lock button. They can also be locked from the outside with the button by depressing the button while the door is open and then ***holding the door handle all the way down*** while closing the door. The button snaps to the unlocked position when the door is closed in the usual fashion.

The front doors can be locked and unlocked with the driver's key. They can also be locked with the lock button and when so locked, the key will unlock them. ***Be careful not to lock the keys in the car when locking doors with the lock button.***

Lock your car. Never leave it unlocked when unattended.

Ventilation

The ventilating panes in the front door windows and the rear windows of sedans can be pivoted to secure any degree of ventilation, with a minimum of drafts.

In cold weather or in rain or snow, they can be opened slightly to provide just enough air circulation to prevent window and windshield steaming or fogging.

In extremely hot weather, the front ventilators can be turned almost completely around to a position that will "scoop" air into the car.

Additional air can be secured in warm weather through the cowl ventilator, which is screened to keep out insects, etc.

The ***sunshine turret top,*** which is special equipment on touring sedans, provides additional ventilation and a view upward. The movable panel is released by rotating the T-shaped locking handle, after which the panel may be slid to the rear any desired amount, and locked in position. When the panel is closed, rotating the handle locks it in position.

Radio

The Cadillac instrument panel is designed to provide a convenient and attractive installation for the Cadillac radio.

The radio has seven buttons for touch tuning. The five center buttons are for station selection. Pressing any one of these buttons turns on the radio and instantly tunes in the desired station. The set may be easily adjusted to select any five stations desired.

The two outside buttons are not station selectors. Pressing the left-hand button turns off the set, while pushing the right-hand button switches the tuning to the manual control disc.

The tone control switch in the center of the radio control panel can be turned either to the "normal" position, which gives high-fidelity tone and maximum sensitivity, or to the "quiet" position, which softens the tone and reduces the sensitivity for high-powered stations or high interference areas.

Your Cadillac-LaSalle dealer will be glad to demonstrate the radio to you.

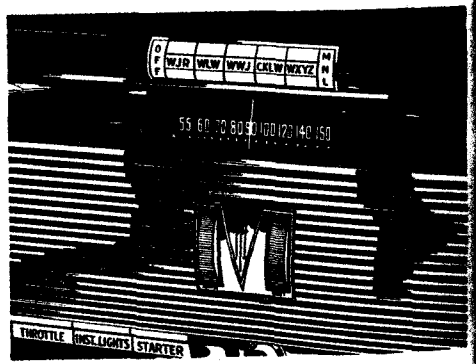

FILE COPY
DO NOT REMOVE

Authorized Service Stations

We urge you to take your Cadillac car to Authorized Service Stations for any service work that it may require, as Authorized Service Stations are qualified to take care of this work in a manner that cannot be duplicated elsewhere.

They have the obvious advantages of specialized experience on Cadillac cars, of the use of genuine Cadillac parts, and of adequate tools and equipment. Their workmen, too, secure the benefits of continuous training on up-to-date Cadillac servicing methods by means of regular publications and special bulletins supplied exclusively to them by the Cadillac factory.

Furthermore, keeping Cadillac owners well satisfied with their cars will pay dividends in future car sales to Authorized dealers. For this reason alone, no one else will have as great an interest in keeping your car performing at its best.

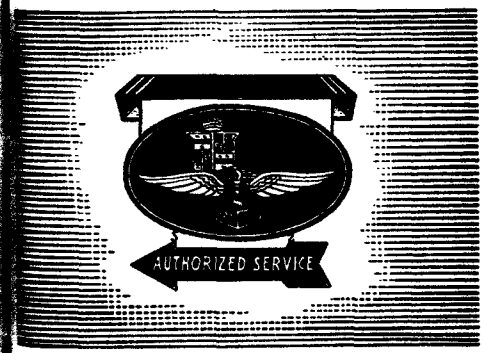

Our interests coincide in this matter of servicing your car and we urge therefore that you patronize Authorized Service Stations.

Cadillac-LaSalle Service

As a purchaser of a new Cadillac car, you will be interested in knowing what you are entitled to under the Cadillac-LaSalle Owner Service Policy, and what you can expect at Authorized Service Stations.

The Owner Service Policy Certificate is illustrated below and described on the next page. Immediately following is a brief discussion of Authorized Service.

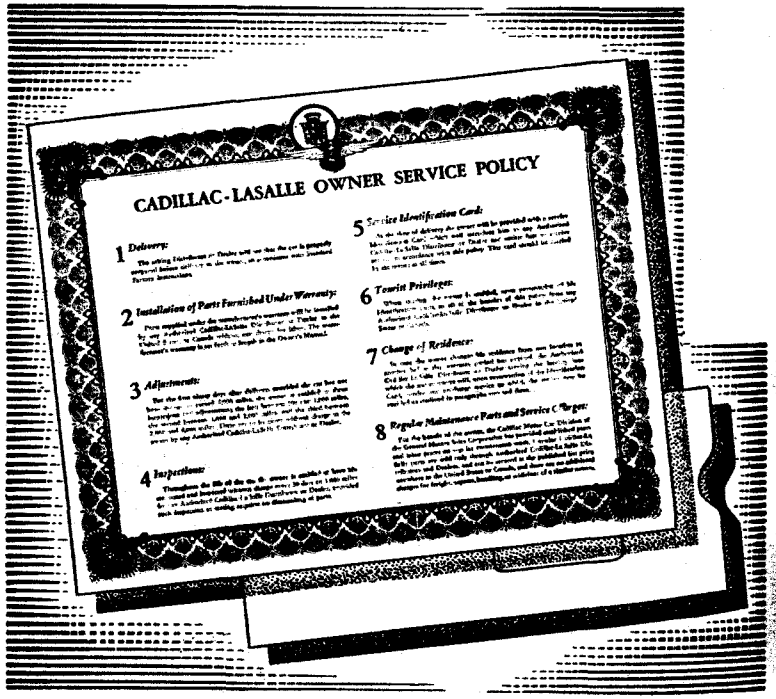

Owner Service Policy

When you took delivery of your car, you received from our distributor or dealer an "Owner Service Policy Certificate," which we ask you to read carefully at this time, if you have not already done so.

You will note from your Certificate that you are entitled to a number of privileges, including: free inspections and adjustments during the first 90 days or 4,000 miles of ownership, replacement without charge of any parts adjudged by this Company to be defective under its Warranty, and free inspections at any time, provided no disassembly of parts is required.

You are also entitled, when touring, to the same consideration from any Authorized Service Station as you would receive from the service station of the dealer who sold the car, by merely presenting your Identification Card. This card was also presented to you by the dealer when you took delivery of the car. ***Sign this card as soon as it is received and always carry it with you when touring.***

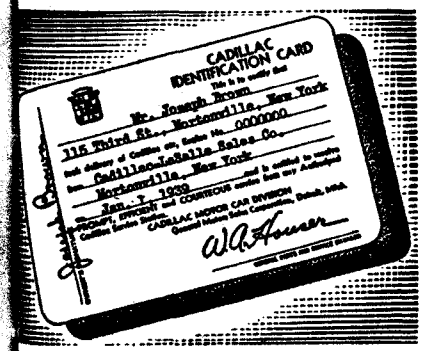

As aids to touring owners, Authorized Service Stations display the sign illustrated on page 19, and they are listed under the Cadillac-LaSalle trademark in the classified telephone directories of most of the larger cities.

Manufacturer's Warranty

All Cadillac cars are sold subject to the following Manufacturer's Warranty:

"WARRANT each new passenger automobile manufactured by us, to be free from defects in material and workmanship under normal use and service, our obligation under this Warranty being limited to making good at our Factory any part or parts thereof, including all equipment or trade accessories (except tires) supplied by the Car Manufacturer, which shall, within ninety (90) days after making delivery of such vehicle to the original purchaser or before such vehicle has been driven 4,000 miles, whichever event shall first occur, be returned to us with transportation charges prepaid, and which our examination shall disclose to our satisfaction to have been thus defective; this Warranty being expressly in lieu of all other Warranties expressed or implied and of all other obligations or liabilities on our part, and we neither assume nor authorize any other person to assume for us any liability in connection with the sale of our vehicles.

"This Warranty shall not apply to any vehicle which shall have been repaired or altered outside of an Authorized Cadillac-LaSalle Service Station in any way, so as, in the judgment of the Manufacturer, to affect its stability, or reliability, nor which has been subject to misuse, negligence or accident."

Tire and Battery Warranties

The tires and battery on your Cadillac car are covered by separate warranties by their respective manufacturers.

All tires supplied as original equipment carry the following tire manufacturer's warranty:

"Every tire of our manufacture bearing our name and serial number is warranted by us against defects in material and workmanship during life of the tire to the extent that if any such tire fails because of such defect, we will either repair the tire or make a reasonable allowance on the purchase of a new tire."

The battery in your car is guaranteed for 90 days, but if you will have it registered ***immediately*** with a Delco Battery Service Station, you can obtain an Adjustment Policy Service Certificate which protects you for 21 months or 21,000 miles. Your car dealer will be glad to assist with this important matter.

Suggestions

for

Safer Driving

Almost everyone knows something about driving, but there are many degrees of skill and experience. Although Cadillac drivers are generally more skillful than the average, they are usually most willing to profit by the experiences and suggestions of others.

The suggestions on the next few pages will enable a driver to check up on his own technique and modernize any parts of it, if necessary. These are not driving lessons; they are merely reminders of ways to make your driving safer and more comfortable.

We ask that you read all of the suggestions. Most of them will be familiar, but worthy of review. And among them there will doubtless be some that are new and well worth the few moments required to read the entire section.

FILE COPY DO NOT REMOVE

Carbon Monoxide

Always open the garage doors before starting the engine. The engine exhaust contains carbon monoxide, a deadly poisonous gas, which must be allowed to escape outside the garage.

Carbon monoxide is colorless, tasteless, and almost odorless, which means that a person may be overcome before he is aware of the danger. An automobile engine running in a two car garage with the doors closed will accumulate enough gas in three or four minutes to overcome any occupants.

In cold weather, especially, drivers must be sure to open the doors before starting the engine. The risk is even greater at this time, as the added choking required by the engine in cold weather makes the accumulation of gas much more rapid.

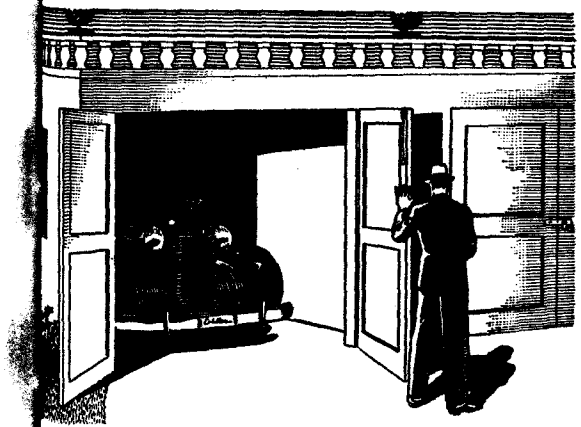

Starting the Car

Skillful driving includes the ability to coordinate the operation of the transmission control lever, clutch and accelerator in a way that will start the car in motion and take it through the gear changes without jerk or jar. The smoothly acting clutch and Synchro-Mesh transmission with which the Cadillac car is equipped provide the best kind of assistance for these operations.

The following principles of gear shifting will enable you to check up on your own driving habits.

Normally a car should be started in low gear. It will move off more smoothly and pick up speed more quickly and—with the Synchro-Mesh transmission—the shift into second can be easily and quietly made.

Note: ***Gear clash when shifting into low (or reverse) is caused either by not pushing the clutch pedal all the way down or by not waiting a few seconds after disengaging the clutch to allow the gears to stop spinning. Gear clash can and should be avoided, as it tends to shorten the life of the gears.***

The shift into second can be made as soon as the car has gained enough momentum to travel 5 or more miles per hour. The shift into high can be made at any speed above 15 miles per hour.

In moving the gear shift lever of a Syncro-Mesh transmission, never jerk the lever. Always move it with a steady deliberate motion to permit the synchronizing mechanism to function.

Stopping the Car

You have probably observed, in using your brakes, that the pedal pressure and pedal travel required are both very slight. This is due to the design of the Cadillac brakes with their hydraulic linkage and their self-energizing shoe action.

Stopping the car, as you know, generates heat at the brake linings and drums, and results in wear of the brake linings. Maximum lining life can be secured by avoiding emergency stops as much as possible. On approaching a stop sign or red traffic signal, coast up to the stopping place ***with the engine in gear*** and apply the brakes early with gradually increasing pressure, releasing the clutch ***just before*** the car is brought to an easy stop.

Applying the brakes with the clutch engaged is essential in slippery weather and it is advantageous at all times. You must, of course, remember to disengage the clutch just before you stop or you will stall the engine.

In bringing the car to a stop from high speeds, in stopping on icy pavements, or in going down long hills, the efficient way to slow up the car is by a succession of "snubbing" actions of the brakes rather than by continuous pedal pressure.

It is better not to use brakes at all at extremely high speeds except in case of emergency. If possible, coast down to 50 or 60 M. P. H. before applying them.

Night Driving

The first requirement of safe night driving is adequate lighting, and in this the Cadillac lighting system excels. The headlights have been designed with highly efficient driving and passing beams. Selecting these beams is performed safely and easily by means of the foot-operated switch at the left of the clutch pedal.

The generator charging circuit is also designed to meet the requirements of night driving. The voltage regulation does not decrease the charging rate at high speeds, but operates in accordance with the current required for lights, radio and other electrical equipment.

Your safety ultimately depends, however, on wise use and proper care of this equipment. Observe the following rules in driving at night:

Keep your speed low enough at all times to permit stopping within the distance illuminated by your headlights.

When passing other cars, use the correct passing beam. Watch the right hand edge of the road. Do not look into the lights of the approaching car.

Have your headlamps cleaned and re-aimed twice a year.

In fog at night, ***slow down*** and switch the lights to the "city" position.* This reduces to a minimum the glaring reflections from the fine drops of moisture in the air.

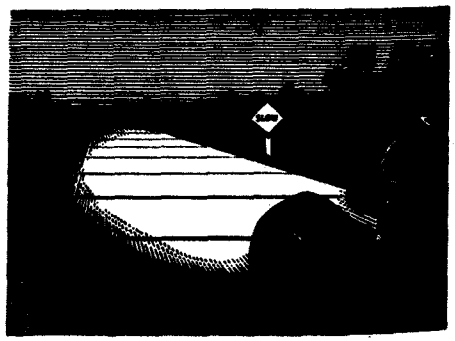

*Better yet, secure a set of Cadillac fog lights.

Winter Driving

Aside from preparation for cold weather (page 13) and using the correct procedure for starting and warming up the engine, the chief problem of winter driving is handling the car on roads made slippery by snow and ice.

The important thing on ice is never to attempt to do anything suddenly. Do not attempt sudden starts, sudden stops, or sudden turns; otherwise spinning wheels or skidding is inevitable.

In starting the car on icy pavement, the trick is to turn the rear wheels very slowly. Shifting into low gear and engaging the clutch slowly without racing the engine will avoid most difficulty with spinning and slipping.

Stopping on icy pavement is even more troublesome. To stop successfully, it is necessary to slow down quite a distance from the stopping point, applying the brakes in a series of brief moderate movements, instead of continuous pressure. The clutch should not be disengaged until the car has almost stopped.

Taking slippery curves or turns without skidding can be readily accomplished by treating each turn as though it were going to be a stop. In other words, approach the turn very slowly and then, when you are actually in the turn, press the accelerator lightly to apply some power to the rear wheels. With power turning the wheels, a skid is less likely to occur.

If the car should start skidding, turn the front wheels in the direction of the skid, and take your foot off the accelerator. Do not apply the brakes.

Tire chains on the rear wheels are often helpful in securing more traction, especially in mud or deep snow.

Mountain Driving

In going ***up*** a steep hill, the important thing is to get a good start. If you don't get a good start, or if the hill is too steep, shift to second gear while the car is still traveling between 20 and 25 miles per hour. Waiting until the speed is less than this increases the danger of stalling.

In going ***down*** a long hill, always keep the car in gear and, if necessary, shift to second or even to low gear. ***Use the same gear in descending a hill as was required to climb it.***

When second gear must be used in descending a hill, it is best to shift before beginning to descend, although the Cadillac Synchro-Mesh transmission permits shifting at any time with a minimum of effort. In shifting from high to second, remember to move the gear shift lever ***deliberately*** to give the synchronizing mechanism time to function.

Above all, keep to your own side of the road and never pass another car when approaching the crown of a hill, on a curve, or in any circumstances when the view ahead is in any way obstructed.

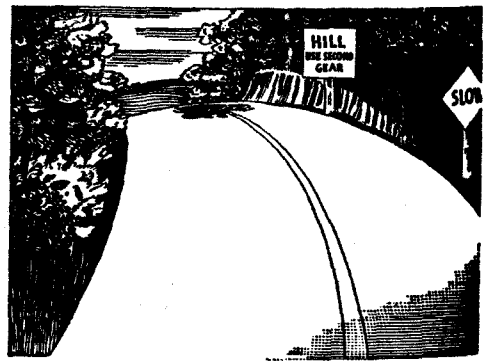

Touring

Touring usually means higher speeds, unfamiliar roads, and new and interesting scenery. Driving under these conditions demands that you pay more conscious attention to the details of handling your car, and that you pay particular attention to the following:

Keep an eye on the speedometer. With the quietness of the Cadillac engine and chassis, and the smooth ride provided by the Cadillac spring suspension, it is extremely difficult to judge your speed. Let your speedometer keep you from overdriving your range of vision, especially at night.

Take plenty of room in overtaking other cars. In passing a car that is going 40 miles an hour, you must travel the same distance required to pass at least 18 cars parked together along the road. Then add in the speed of the car coming the other way and you can see that plenty of room is required. Do not cut in ahead of a car you are passing until you can see it in your rear view mirror.

Take turns at safe speeds. The best technique for doing this is to apply your brakes when approaching the turn, enter it at reduced speed and then accelerate as you come out on the straightaway. This method is not only safer but it also enables you to make better time.

Before shutting off the engine after a long hard drive, especially in hot weather or mountain driving, let the engine idle for 2 or 3 full minutes. This will usually cool the engine sufficiently to prevent boiling and loss of water, and will make starting easier as well.

High Speed Driving

Your Cadillac automobile will travel at almost any speed you may wish to drive. Experienced drivers realize, however, the element of danger in speed and attempt maximum speeds only when conditions are extremely favorable.

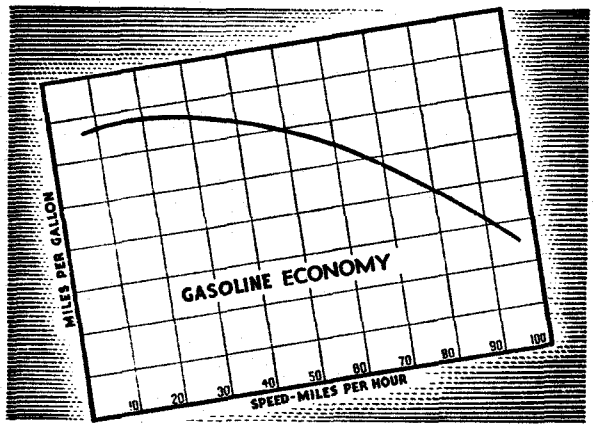

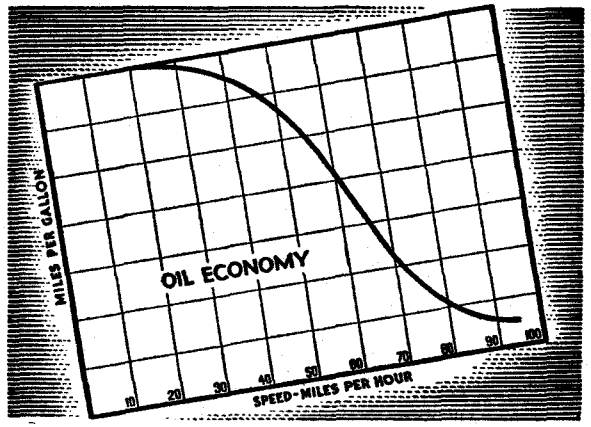

Considerable attention is being given to the effect of high speeds on the car, particularly in regard to fuel consumption, oil consumption, tire wear, and brake effectiveness. In order that Cadillac owners may have the facts on these important items, we are reproducing on these pages four charts which make these items clear. A brief review of these facts will indicate why many wise motorists are touring at more moderate speeds—from 45 to 55 M. P. H.

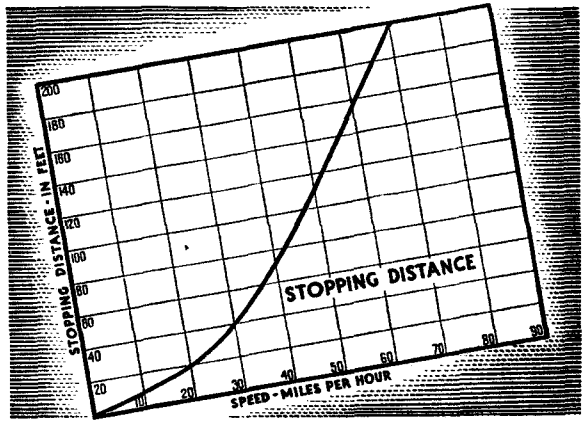

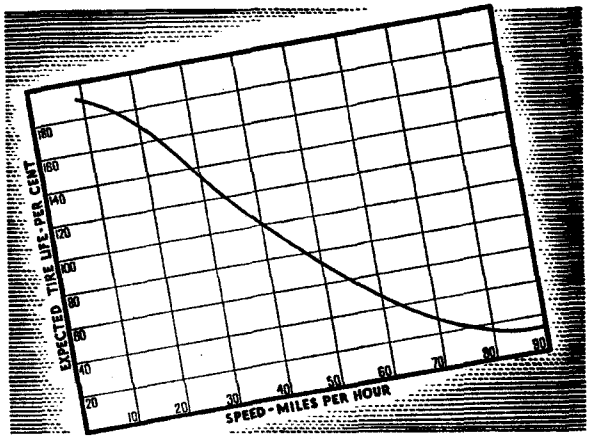

Gasoline Economy

The number of actual miles per gallon that any owner gets from any car depends upon a large number of factors, some of which the owner can control and some he cannot. Factors over which the owner has little, if any, control are the condition of the road surfaces, the number of hills and turns, the amount of traffic, and the climatic conditions, particularly the wind and temperature.

Careful attention to the controllable factors will, however, enable any owner to increase considerably his gasoline mileage. The factors to be considered are:

1. Speed—The charts on page 32 and 33 indicate emphatically how much you can save by driving at moderate speeds.
2. Stopping—Coast to a gradual stop whenever possible. This saves both fuel and brake lining.
3. Idling—Shut off the engine while parked, even for a few minutes, in front of stores or homes, or when waiting for long freight trains at railroad crossings. Idling, except to warm up a cold engine, is sheer waste.
4. Lubrication—Keep both the engine and chassis well lubricated at all times.
5. Tires—Keep your tires properly inflated to avoid excessive road friction.
6. Mechanical Condition—Your engine must be kept "in tune" to use its fuel economically. Periodic adjustments of the ignition system and occasional valve regrinds will pay for themselves in gasoline saved.

Tire Life

Maximum tire life can be secured by careful attention to a few essential details of care and driving habits, namely:

1. Keep the tires properly inflated at all times.
2. Avoid spinning the wheels when starting.
3. Avoid sudden stops.
4. Turn corners at moderate speeds.
5. Steer around bumps, ruts, or minor obstructions in the roads.
6. Keep out of car tracks.
7. Do not bump or scrape the curb when parking.
8. Keep the front wheels in proper alignment.
9. Interchange the tires, left to right, and front to rear, every 4,000 miles.

Lubrication

In order that your Cadillac car may deliver throughout its life the performance built into it, we urge you to protect your investment by conscientious observance of all of the items recommended in this chapter.

NOTE: These lubrication items are given for your guidance only, and not to encourage you or your chauffeur to perform the work. Lubrication is best performed with the efficient, specialized equipment used in up-to-date service stations, and there should be no occasion for resorting to the slow, untidy, ineffective methods of former years.

Authorized Lubrication. Lubrication operations can be performed most satisfactorily by your Authorized Cadillac-LaSalle service station. In addition to having the specialized equipment previously referred to, they also have the correct lubricants, complete instructions, and experience on Cadillac cars.

When a lubrication operation is performed at an Authorized Service Station, the number of the next lubrication and the mileage at which it is due will be posted on the crest shaped plate on the left front door pillar. When this mileage appears on the speedometer,

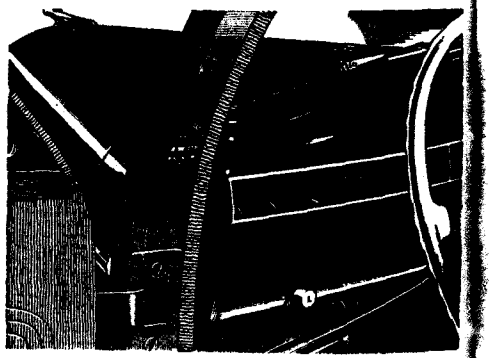

the car can be taken to any Authorized Service Station and, by asking for "schedule lubrication," the car will receive the exact lubrication required.

Authorized lubrication service can be purchased at a special rate by means of the Lubrication Agreement. Ask your dealer about this money-saving plan.

Engine Oil Recommendations

During the first 1000 miles use the oil that was in the crankcase when the car was delivered. When it is necessary to add oil during this period, use nothing heavier than 10-W oil in winter or 20-W in summer. Change the oil at the end of 1000 miles.

NOTE: "Break-in" oils or compounds are entirely unnecessary. They should not be used under any circumstances unless the supplier can furnish satisfactory proof that the compound contains no harmful ingredients.

After the first 1000 miles the crankcase oil should be selected to give the best performance under your individual climatic and driving conditions.

During cold weather oil should be used that will permit easy starting at the lowest atmospheric temperature that is likely to be encountered.

When the engine crankcase is being refilled, the engine oil should be selected, not on the basis of the atmospheric temperature existing at the time of the change, but on the anticipated ***minimum*** temperature for the ***entire*** period during which the oil is to be used. Unless the selection is made on this basis, difficulty in starting will be experienced at each sudden drop in temperature.

The viscosity grades of engine oil for use in your Cadillac car at the various cold weather temperatures are given in the chart on the next page:

If you anticipate that the minimum atmospheric temperature will be:	Use the grade indicated:
Not lower than 32°F. above zero.	20-W or SAE-20
As low as 10°F. above zero.	20-W
As low as 10°F. below zero.	10-W
Below 10°F. below zero.	10-W plus 10% kerosene

NOTE: 10-W oil plus 10% kerosene is recommended only for those territories where the temperature falls below 10°F. below zero for long periods.

During summer weather use of 20-W or SAE 20 engine oil will permit better all-around performance of the engine than will the heavy body oils. SAE 30 oil may be used if it is expected that the average prevailing daylight temperature will be 90°F. or above, or if the car is regularly driven at high speeds.

SAE *Viscosity Numbers*

The viscosity of a lubricant is simply a measure of its body or fluidity. The SAE viscosity numbers mentioned in this section constitute a classification of lubricants in terms of fluidity, but without reference to any other properties. The oils with the lower numbers are lighter and flow more readily than do the oils with the higher numbers.

The SAE viscosity numbers have been adopted by practically all oil companies and no difficulty should be experienced in obtaining the correct grades of lubricant.

VISCOSITY NUMBER	VISCOSITY (SAYBOLT UNIVERSAL) 0°F. MIN.	0°F. MAX.	130°F. MIN.	130°F. MAX.	210°F MIN.	210°F MAX.
10-W (*)	5,000	10,000	—	—	—	—
20-W (**)	10,000	40,000	—	—	—	—
S.A.E.20	—	—	120	185	—	—
S.A.E.30	—	—	185	255	—	—

*SUB-ZERO POUR POINT **ZERO POUR POINT

The refiners or marketers supplying the oil are responsible for the quality of the product. Their reputation is the car owner's best assurance of quality.

Maintaining Oil Level

Check the oil level every time gasoline is purchased and add oil as necessary. The oil gauge rod on V-8 engines is marked in quarts; add oil whenever the level falls below the 6 quart mark, but do not add above the 7 quart mark. Always be sure to have the right amount before starting on a long drive.

Changing Crankcase Oil

Under normal driving conditions, draining the crankcase and replacing with fresh oil every 2000 to 3000 miles is recommended.

Under adverse driving conditions, it may become necessary to drain the crankcase oil more frequently. These conditions would include:

Driving through dust storms or on extremely dusty roads may contaminate the engine oil in spite of the engine air cleaners.

During cold weather, frequent starts and short runs may contaminate the oil with water condensation inside the crankcase.

Hard driving tends to thicken oils and this may interfere with easy starting in cold weather.

Drain the crankcase only after the engine has been heated to normal operating temperature. The benefit of draining is, to a large extent, lost if crankcase is drained when engine is cold, as some suspended foreign matter will cling to the sides of the oil pan and will not drain out readily with slower moving cold oil.

Whenever the crankcase oil is changed, the copper gauze in the engine oil filler cap, which is also the air intake for the crankcase ventilating system, should be cleaned in gasoline and dipped in engine oil. The carburetor air cleaner should also be cleaned and re-oiled. (See Page 47).

Lubrication Schedule

	Lubrication Number											
	1	2	3	4	5	6	7	8	9	10	11	12
Every 1000 miles												
Oil starter and generator oil cups.	✓	✓	✓	✓	✓	✓	✓	✓	✓	✓	✓	✓
Oil hand brake connections.	✓	✓	✓	✓	✓	✓	✓	✓	✓	✓	✓	✓
Oil clutch release mechanism.	✓	✓	✓	✓	✓	✓	✓	✓	✓	✓	✓	✓
Oil distributor cam wick.	✓	✓	✓	✓	✓	✓	✓	✓	✓	✓	✓	✓
Lubricate distributor grease cup.	✓	✓	✓	✓	✓	✓	✓	✓	✓	✓	✓	✓
Lubricate water pump.	✓	✓	✓	✓	✓	✓	✓	✓	✓	✓	✓	✓
Lubricate chassis connections.	✓	✓	✓	✓	✓	✓	✓	✓	✓	✓	✓	✓
Lubricate body hardware.	✓	✓	✓	✓	✓	✓	✓	✓	✓	✓	✓	✓
Add water to battery.†	✓	✓	✓	✓	✓	✓	✓	✓	✓	✓	✓	✓
Add liquid to radiator.	✓	✓	✓	✓	✓	✓	✓	✓	✓	✓	✓	✓
Check tire inflation.	✓	✓	✓	✓	✓	✓	✓	✓	✓	✓	✓	✓
Inspect steering gear lubricant level.	✓	✓	✓	✓	✓	✓	✓	✓	✓	✓	✓	✓
Inspect transmission lubricant level.	✓	✓	✓	✓	✓	*	✓	✓	✓	✓	✓	*
Inspect rear axle lubricant level.	✓	✓	✓	✓	✓	*	✓	✓	✓	✓	✓	*
Every 2000 miles												
Drain and replace engine oil.	‡	✓	✓	✓	✓	✓	✓					✓
Clean filter in oil filler cap.		✓	✓	✓	✓	✓	✓					✓
Clean carburetor air cleaner.		✓	✓	✓	✓	✓	✓					✓
Every 6000 miles												
Clean, repack and adjust front wheel bearings.					✓							✓
Drain, flush and refill transmission.					✓							✓
Drain, flush and refill rear axle.					✓							✓

See Lubrication Chart for Complete Lubrication Instructions

†Inspect battery every 2 weeks in Summer.
*Refill transmission and axle with proper grade of lubricant every 6000 miles.
‡The oil originally in the engine should be changed within the first 1000 miles.

Chassis Lubrication

The complete lubrication schedule is given on the opposite page. If faithfully followed, the schedule will provide correct lubrication for each wearing surface of the car. The items listed are illustrated in the "Lubrication Chart" supplied with this manual, which will assist the operator in locating the various lubricating points.

The schedule calls for a lubrication operation each one thousand miles. After 1000 miles of driving, lubrication No. 1 is due, at 2000 miles No. 2 is due, etc. At 13,000 miles the schedule begins again with No. 1. The schedule is expressed in mileage intervals because lubrication is required after 1000 miles of driving. ***If the mileage each month is less than 1000, the car should be lubricated once each month, regardless of mileage.***

Lubricants

The rear axle of your car is equipped with a hypoid gear and pinion, and it must be lubricated all year round with ***SAE-90 Hypoid Lubricant.***

The lubricant level should be inspected every 1000 miles and Hypoid Lubricant added if required. The axle should be drained, flushed out, and refilled with fresh Hypoid Lubricant every 6,000 miles, regardless of season.

NOTE: SAE 80 Hypoid Lubricant should be used in localities where the temperature drops below 10° below zero for long periods.

The transmission is to be lubricated all year round with SAE 90 or SAE 90 EP gear oil. The SAE 90 Hypoid

Lubricant recommended for the rear axle may be used also in the transmission.

The lubricant level should be inspected every 1000 miles and lubricant added as required. Every 6000 miles, the transmission case should be drained, flushed and refilled with fresh lubricant.

Other Units— The steering gear, water pump, wheel bearings, and grease gun connections each require a specific type of lubricant. Only operators familiar with these requirements and having the right materials should be permitted to lubricate the car.

Lubricant Capacities:

	39–60S	39–61	39–75
Engine Crankcase	7 qts.	7 qts.	7 qts.
Transmission	2½ pts.	2½ pts.	2½ pts.
Rear Axle	5 pts.	5 pts.	6½ pts.
Cooling System	24½ qts.	24½ qts.	24½ qts.

Other Operations:

In addition to the operations included in the lubrication schedule, there are several other items of maintenance regularly required which are listed here for your convenience:

Shock absorbers..Check fluid level every 6,000 miles.
Brakes.....Check fluid level every 6,000 miles.
Cooling System...Flush twice a year—Spring and Fall.
Gasoline Lines and
Strainers.....Clean out twice a year—Spring and Fall.
Engine Oil Pan...Remove and clean once a year.
Tires.....Interchange, left to right and front to rear, every 4,000 miles.

Maintenance Suggestions

Body

The body of your car deserves the same care and attention as the chassis. Care of the body consists simply of regular lubrication of those body parts requiring it, and regular cleaning of the finish and the upholstery.

Care of Chrome—Chrome-plated parts will retain their brightness much longer and keep new in appearance indefinitely if protected from corrosion caused by rust-forming chemicals and kindred causes.

The greatest danger to chrome-plated parts comes from salt and calcium chloride which are used to clean streets of snow and ice in the winter, and are also applied to dirt and gravel roads to lay dust in the summer. These compounds are splashed or thrown on plated parts and, if allowed to remain for any length of time, are destructive to the finish, as they cause a chemical reaction which eats through the surface and opens it to rust.

Corrosive atmospheres also exist in some localities particularly along the sea-coast where the air is salt-laden, and these too have a harmful effect on chrome plate.

Much of the destructive force of these elements can be eliminated if the plated parts are washed frequently and then treated with wax or sealer,* such as is used with lacquer polish. After washing the plated parts and drying with a chamois, apply the wax or sealer with a clean soft cloth and then polish with another clean cloth. This treatment should be applied each time the car is washed.

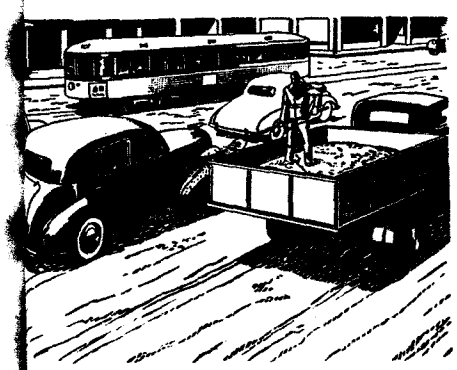

*See note on page 44.

If this operation has been neglected and rust spots do appear on chrome-plated parts, wash these spots vigorously with a scouring powder suitable for porcelain, then rinse and dry them and apply a sealer compound.

Care of Lacquer Finish—The lacquer finish of the car can be kept new and lustrous with only a thorough wiping with a soft dry cloth every few days. With this care, washing will be required only when considerable mud or dust has accumulated.

Washing the car can be accomplished simply and easily with plenty of clean cold water, a soft wool sponge, and a clean chamois. Soap and hot water are not only unnecessary but undesirable. Never wash the car in the direct rays of the hot sun and never wash it when the sheet metal surfaces are hot from a hard run.

Continued exposure to wind and weather, and especially to strong sunlight, causes a gradual dulling of the finish. If the finish appears dull after washing, the original brightness and lustre may be restored by the use of a good lacquer polish.* Selection of a good polish is important as some polishes contain excessive abrasive material and other harmful ingredients.

Tar is occasionally splashed on the finish from hot or newly surfaced roads. It can usually be removed with white (unleaded) gasoline. If allowed to harden, however, it may require the use of commercial tar remover.

In the winter time the car should be washed frequently if it is driven over roads or streets where salt or calcium chloride are used to melt snow or ice. These road chemicals have a severe effect on the finish of lacquered as well as plated parts if allowed to remain on them for any length of time.

Care of Upholstery—Regular monthly cleaning of the car's interior with a vacuum cleaner and a whisk broom will keep the upholstery in the best of condition and will prevent excessive wear.

*In order to make available products of known quality, we market Cadillac Body Polish, Cadillac Blue Coral Sealer and Cadillac Fabric Cleaner for these purposes. And, for those owners who take particular pride in their car's appearance, there is the Cadillac Blue Coral treatment, which provides a permanent high-lustre finish. Ask your dealer about it.

Spots on the upholstery can usually be cleaned with any good dry cleaner* used sparingly. Detailed instructions on cleaning upholstery are given in the booklet, "Good Housekeeping in your Car," distributed to Cadillac owners by the Fisher Body Corporation.

Engine

The amount of attention required by the engine is surprisingly small, considering the number of working parts and wearing surfaces. All that is required is adequate lubrication with the correct grade of engine oil (see page 38), and occassional adjustments as explained in the following paragraphs.

Ignition System—The ignition system must supply to each cylinder in turn at exactly the right time a spark hot enough to ignite the highly compressed gasoline mixture in the cylinders. And, at the ordinary cruising speed of 60 miles per hour, the system must supply approximately 11,000 of these sparks ***per minute.*** Is it any wonder that the ignition contact points and spark plugs require occasional attention?

The need for attention to the ignition system is usually indicated by sluggish engine performance, due to the lack of a hot enough spark. Many experienced owners do not wait for this symptom, however, but have the ignition system checked periodically, twice a year or oftener. The ignition system should always be checked at the beginning of cold weather in the fall, to assure easy starting during the winter months.

The work required by the ignition system consists of the following:

Cleaning the spark plugs and setting the gap to .025—.030 inch. Install new plugs if the old plugs are badly worn.

*See note on page 44.

A. C. Spark Plug Model 104 is recommended for Cadillac V-8 cars.

Cleaning the timer contact points in the distributor and setting to a gap of .012—.018 inch. Replace contact points if they are badly worn.

Retiming the ignition to the timing marks on the harmonic balancer at the front of the engine. The timing is correct when the contact points open to fire the spark plug for No. 1 cylinder as the ignition advance marking 1G/A is opposite the pointer.

The cylinders are numbered from the front, with the odd numbers in the left bank and the even numbers in the right bank. The left front cylinder is No. 1. The firing order is 1, 8, 7, 3, 6, 5, 4, 2.

Carbon and Detonation — Most automobile owners have been taught that detonation or "ping" in the engine is an indication of an over-advanced spark or of carbon in the engine, and probably the latter. While this is true, the following supplementary information must be included when considering "ping" in any high compression engine.

On cars with high compression engines, slight detonation occurring on rapid acceleration at low speeds and disappearing at about 15 miles per hour, is normal and indicates that the engine is performing at top efficiency. Detonation at higher speeds can be eliminated by checking and correcting the following:

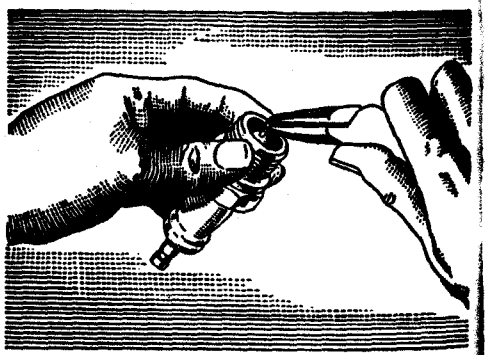

Grade of gasoline used —The Series 60S and 61 engines are designed for use with 70 octane gasoline (regular); the Series

75, for premium fuels. Gasoline of a lower rating may be used safely, but in this case the ignition timing must be retarded to a point where the engine will not knock.

Over-lean mixture—This may be due to an incorrect carburetor adjustment or to an obstruction in the fuel feed.

Spark plugs—One or more faulty spark plugs will cause pre-ignition in their respective cylinders. Replace these with A. C. model 104 spark plugs.

Accumulation of Carbon—Accumulated carbon must be removed by scraping after taking off the cylinder head. Removal of carbon by burning is ***not recommended.***

Carburetor—The only adjustment required by the carburetor is the idling adjustment.

The idling speed should be set with the throttle stop screws to the equivalent of 6 miles per hour. The two idle needle valves should then be adjusted until the engine runs smoothly. These adjustments must be made when the engine is hot.

Any adjustments to the automatic choke mechanism should be made only at an Authorized Service Station.

Air Cleaner — Your Cadillac car is fitted with an air cleaner of the "oil bath type," which operates very efficiently in removing dust from the air drawn into the engine. As this type of cleaner accumulates considerable dust and dirt, it requires regular cleaning every 2,000 miles, or oftener if extreme conditions are encountered.

The cleaner is cleaned and re-oiled in the following manner:

Remove the gauze unit and wash thoroughly in gasoline, taking particular care to wash all

the accumulated dirt and dust out of the wire mesh.

Dry all the units thoroughly, either with compressed air or an adequate drying period.

Pour one pint of engine oil (SAE 50 in summer; SAE 40 in winter) in the reservoir and assemble the wire mesh and cap.

NOTE: No oil should be placed on the wire mesh.

Gasoline Filter—A gasoline filter is provided at the fuel pump on the front left hand side of the engine. Any accumulation of water or sediment should be cleaned out when it can be seen in the glass bowl. Remove the bowl by unscrewing the thumb nut and swinging the yoke to one side. If the screen strainer sticks, remove it by pulling straight down.

Any dirt on the strainer should be washed off with gasoline, and the bowl should be wiped clean. Then reinstall screen and bowl, making sure the bowl seats properly against the cork gasket and tighten.

There is also a strainer screen in the fitting where the gasoline pipe is attached to the carburetor. This screen should be cleaned each time the filter is cleaned.

Fan and Generator Belts—The fan belt is adjusted by raising or lowering the fan bracket; the generator and water pump belt by raising or lowering the generator. The belts are correctly adjusted when they are drawn up snugly, with no free movement or appreciable looseness in the belts.

Water Pump—The water pump is fitted with spring-loaded packings which normally require no attention. When these packings ultimately wear out, they should be replaced with the same type of packings at an Authorized Service Station.

Other Service Operations—Major service operations on the engine, such as valve grinding, replacement of bearings or reconditioning of cylinders, should be performed only by experienced workmen having the necessary instructions and equipment.

Cooling System

The attention required by the cooling system consists of keeping it filled to the proper level with the proper fluid, and keeping all connections tight to insure a leak-proof system.

The capacity of the cooling system is 24½ quarts when filled to the proper level, which is one inch below the top of the upper tank.

Anti-Rust Treatment—When the car is delivered to the owner, a small amount of chemical inhibitor is added to the fluid in the cooling system, in order to reduce foaming and retard the formation of rust and scale, thus helping to keep the system clean. It is not necessary to add more inhibitor each time that water or anti-freeze is added, but whenever the cooling system is drained and refilled, a suitable inhibitor should be added. Your Authorized Service Station can advise you regarding the proper material to use.

Cleaning Cooling System—It is recommended that the cooling system be thoroughly cleaned and flushed twice a year, or every 6,000 miles, preferably by reverse-flow flushing. In any event, the cooling system should be cleaned and thoroughly tightened before anti-freeze is added at the beginning of cold weather.

The following method of cleaning the cooling system can be used if facilities for reverse-flow flushing are not convenient.

Run the engine until it is warm; then stop the engine and open the three drain valves for the cooling system. One drain valve is located at the bottom of each cylinder group

and one below the radiator outlet elbow. All three valves must be open to drain the engine completely. After the liquid has drained off, refill the cooling system with hot water, run the engine for a few minutes and again drain the system. Repeat this operation until the water is clean when it is drained.

In cases where the accumulation of rust and scale is so great that this method does not clean the system adequately, the system should be flushed out, using a solution of water containing one pint of sal-soda (washing soda) and one quart of kerosene, and running the engine for half an hour. After this operation, the system must again be thoroughly flushed in order to clean out all traces of this cleaning solution. Do not allow any of the solution to reach the car finish.

Anti-Freeze

Anti-freeze solutions that can be safely used are of two types: The volatile types such as denatured alcohol and methanol or the non-volatile types such as distilled glycerine and ethylene glycol (Prestone).

If you prefer to use alcohol or methanol solutions, it is important that the solution be tested at frequent intervals, and that sufficient anti-freeze be added to replace any lost by evaporation; otherwise there is a danger of damage by freezing. When using these solutions, it is also important to avoid spilling any on the car finish, or if any is spilled, to flush off immediately with a large quantity of water.

Distilled glycerine and ethylene glycol are more expensive in first cost but, as they are not lost by evaporation, only water needs to be added. Solution lost through leaking or foaming must, of course, be replaced and on this account it is especially important to make sure that the system is leak-proof before adding this type of anti-freeze.

Glycerine and ethylene glycol should be used in accordance with instructions and in the proportions recommended

by the anti-freeze manufacturer. Ordinarily they should not be mixed with other solutions. No additional rust inhibitor should be added when the anti-freeze contains an inhibitor. Many branded alcohol anti-freezes and most non-volatile anti-freezes contain rust inhibitors.

Whenever anti-freeze is to be installed, check over the entire cooling system. Replace any worn hoses and tighten all hose connections. Inspect water pump, fan belt, and radiator shutters and thermostat for proper operation. Clean cooling system thoroughly to remove all rust and scale.

When glycerine or ethylene glycol are to be installed, one special precaution must be taken. The cylinder heads must be tightened thoroughly to prevent any possibility of the cooling liquid getting into the engine crankcase. If necessary, install new cylinder head gaskets and tighten thoroughly.

Salt solutions, such as calcium chloride or magnesium chloride, sodium silicate, kerosene, honey, glucose and sugar solutions are not satisfactory for use in automobile radiators.

Use of Hydrometer—In using a hydrometer to determine the freezing point of a solution, allowance must be made for the temperature of the solution at the time it is being tested. On this account, most anti-freeze hydrometers are fitted with a thermometer and temperature chart. Only this type of anti-freeze tester should be used.

Alcohol and methanol solutions have, for all practical purposes, the same specific gravity and they may be tested with the same hydrometer and mixed in the same solution. When testing alcohol or methanol solutions, allowances must be made for the effect of the inhibitor on the hydrometer reading. With the inhibitor in the cooling system, the actual freezing temperature is ***five degrees higher*** than indicated by the hydrometer.

Tools

The tool kit supplied with the car includes tire changing equipment and a few general use tools, as follows:

Hammer	Tool Bag
Screw Driver	Jack and Handle
Pliers	Wheel Mounting Wrench
Adjustable Wrench	Wheel Disc Pry
Open End Wrenches	if Discs are used

The tools are stowed in the rear deck or trunk compartment next to the spare tire.

Wheels and Tires

Use of Jack—The jack supplied with the Series 60S and 61 is of the type that lifts the car by the front or rear bumper. The conventional type jack is supplied with Series 75. This jack must be placed under the jack pads which are located as shown in the drawings at the bottom of the page. Always set the hand brake before attempting to jack up the car.

Changing Wheels—Remove the hub cap by prying off with a screw driver. On cars fitted with wheel discs, the cap and disc are integral and are pried off with a special right angle tool. In using the tool, rock the handle sideways, not up and down.

Remove the nuts from the mounting studs around the hub. The wheel must then be lifted off the studs and swung so that the front edge is inward, after which the wheel can be rolled out from under the fender toward the rear.

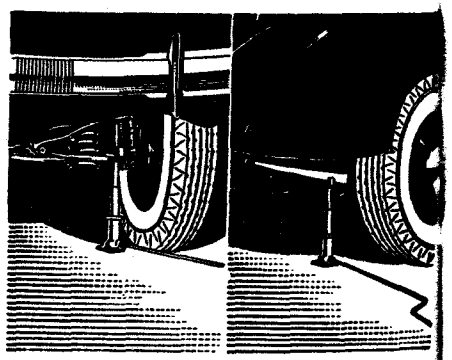

When reinstalling a wheel, roll it in under the fender from the rear and lift it up to the hub, hanging it on the mounting studs and then attaching the mounting nuts. Do not tighten the nuts in rotation; after tightening one nut, tighten the one opposite.

Tires—Tire inflation pressures and procedure are given in detail on page 9. The correct tire sizes are:

Series 39-60S.....4 ply 7.00 x 16
Series 39-61.....4 ply 7.00 x 16
Series 39-75.....6 ply 7.50 x 16

The life of all four tires may be increased considerably by interchanging them at regular intervals of 4,000 miles. The right front tire should be interchanged with the left rear and the left front with the right rear. This will subject all tires to equal amounts of all types of wear, and thus increase their useful life.

Electrical

Storage Battery—The Storage Battery is carried in a compartment underneath the right front fender.

The battery is filled with an acid solution from which the water slowly evaporates, making it necessary for fresh distilled water to be added to each of the three cells at regular intervals to bring the level up to the bottom of the filling tubes. Distilled water should be added at least every 1000 miles and, in warm weather, every 500 miles or at least every two weeks. Hydrant water or water that has been in contact with metallic surfaces is not satisfactory.

After adding water to the storage battery in freezing weather, the car should immediately be run far enough to mix the water with the acid solution thoroughly. If the car is parked immediately after water is added, the water is likely to stay on top of the acid solution and may freeze, thus causing extensive damage to the battery.

CAUTION: Whenever disconnecting any wires in the generator circuit or in the harness opening at the regulator box, the battery must be disconnected first of all. Otherwise, there is a possibility of the loose connections being shorted or grounded in a way that will reverse the generator polarity or otherwise damage the charging circuit.

Lamp Bulbs—In replacing lamp bulbs in any of the lights on the car, the same candle power bulb should be used for replacement as was originally installed. It is a good plan to carry a spare set of these lamp bulbs in the car at all times.

The lamp bulbs used in the car are as follows:

Location	Voltage	Candle Power	Mazda No.
Headlamps	6–8	32–32	2330-L
Rear Lamps	6–8	21–3	1154
Dome Light	6–8	15	87
License Lamp Quarter Lights	6–8	3	63
Parking Lamps (In Headlamps) Instrument Lamps Trunk Compartment Lamp	6–8	2	55
Clock Lamp Indicator Bulbs Glove Compartment Bulb Ignition Lock Lamp	6–8	1	51

Storing the Car

If the car is to be stored for any length of time it is important that a few precautions be taken to protect it from deterioration. Blocking up the car to take the weight off of the tires and placing a cover over the entire body will protect the tires and finish. The engine and the storage battery, however, require special attention.

The engine should be run until it is thoroughly warm. The gasoline filter bowl should then be removed (see page 48) and the engine run until all of the gasoline is drawn out of the pump and the carburetor. The gasoline tank should be drained.

Oil should be injected into the cylinders while the engine is still warm. This may be done by pouring two or three tablespoonfuls of engine oil into the spark plug holes. Cranking the engine a few times after that is done will distribute the oil evenly over the pistons and cylinder walls. The cooling system should then be drained.

The battery should be fully charged and the solution should be at the proper level. The battery should be disconnected to avoid discharge through insulation leaks. If possible, arrangements should be made to have the battery charged from an outside source every two months during the storage period.

When taking a car out of storage, first make sure that the battery is charged. If the gravity is below 1.200, remove the battery and have it recharged. Drain the oil, remove and clean the oil pan, reinstall the pan and add 7 quarts of fresh oil. Fill the cooling system, using an anti-freeze solution in cold weather. Remove the spark plugs and inject two or three tablepoonsfuls of engine oil into each cylinder. Reinstall the spark plugs and start the engine.

License Data

Engine Numbers:

Series 39-60S . . . . . 6290001 and up
Series 39-61 . . . . . 8290001 and up
Series 39-75 . . . . . 3290001 and up

The engine number, which is also the serial number, is stamped on the car in two places: On the crankcase behind the left cylinder block, parallel to the dash, and on the frame sidebar, opposite the steering gear. It contains figures only, and no letters. It can be read from the left side upon lifting the hood.

The engine number is to be used in license and insurance applications, and in general reference to the car.

Type of Engine V-8
Bore and Stroke . . . . . 3½ x 4½ in.
Piston Displacement . . . . . 346 cu. in.
Taxable Horsepower 39.2

Wheelbase:

Series 39-60S . . . . . 127 in.
Series 39-61 . . . . . 126 in.
Series 39-75 . . . . . 141 in.

Weight:—Consult the distributor or dealer who sold the car or the Motor Vehicle Commissioner of your State. Weights of all Cadillac body styles are regularly supplied to these authorities.

Edition 39-61
4M-9-38

1939

SERVICE INFORMATION

(PRELIMINARY)

Covering

LaSalle V-8, Series 39-50

Cadillac V-8, Series 39-61 60S, & 75

Cadillac V-16, Series 39-90

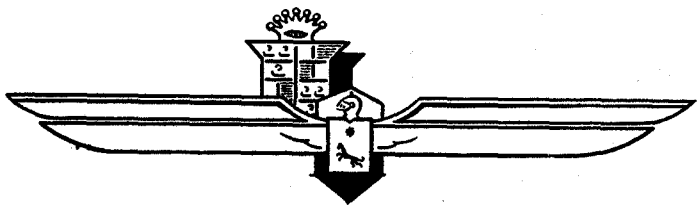

Service Department

CADILLAC MOTOR CAR DIVISION

General Motors Sales Corp.

Contents

	Page
Body	3
Body Styles	3
Frame	4
Front Wheel Suspension	4
Rear Wheel Suspension	5
Brakes	6
Engine	7
Clutch	8
Transmission	8
Fuel Tank and Exhaust	9
Steering	10
Wheels, Rims and Tires	10
Chassis Sheet Metal	10
Chassis Electrical System	11
Radiator	13
Lubrication	14
Tools	15

The 39-series Cadillac-LaSalle cars are as follows:

Series	Wheelbase	Engine	Starting Engine No.
39-50	120-inch	322 cu. in. V-8	2290001
39-61	126-inch	346 cu. in. V-8	8290001
39-60S	127-inch	346 cu. in. V-8	6290001
39-75	141-inch	346 cu. in. V-8	3290001
39-90	141-inch	431 cu. in. V-16	5290001

Copyright 1938 by
GENERAL MOTORS SALES CORP.

Lithographed in U. S. A.

Body

Striking appearance changes characterize the new 39-series Cadillac and LaSalle cars, but the bodies of these cars are very familiar in design and construction to the corresponding 38-series bodies. Both the Fisher and the Fleetwood bodies are of familiar steel, turret-top construction.

Five different chassis models with 36 body styles as listed below comprise the 1939 line. This listing gives in detail the arrangement of seats and windows, and locations of spare tires and luggage space.

Door and window arrangements are the same as for the corresponding previous series. Individually-controlled ventilation is continued in all body styles, with sliding panes of new design in the rear quarter windows of coupe and sedan models. The ventilator panes on all series have small locking bolts to prevent their being pried open.

Concealed door hinges are used on series 39-50 and 61 closed bodies at all points except the lower front door hinge. These hinges are held in place by large size Phillip's head screws. A No. 4 Phillip's head screw driver is necessary for their removal and installation. The hinge mounting holes are slightly elongated, as in the familiar visable type hinge, to permit adjustment of the doors.

The two key locking system is retained on all series with only minor changes. On 39-50 and 61 cars, the door locks are separate from the door handles, and the lock cylinders are of the same construction as on 38 and 39-60 Special cars. The LaSalle now has locks in both front doors, as is the case with all Cadillac models. Locking handles are continued on 39-75 and 90 cars. The familiar press button interior door locks are used on all series, except 60S.

Body Styles

Series 39-50 (120″ Wheelbase)—Fisher Bodies

2 Coupe	39-5027	Quarter windows, 2 opera seats, luggage, spare tire under deck
2 Convertible Coupe	39-5067	Fabric top, blind quarter, 2 opera seats, spare tire under deck
*5 Touring Sedan, 2-Door	39-5011	Built-in trunk, spare tire in trunk, divided front seat, wide rear windows
5 Convertible Sedan	39-5029	Built-in trunk, spare tire in trunk, fabric top, blind quarter
*5 Touring Sedan, 4-Door	39-5019	Built-in trunk, spare tire in trunk

Series 39-61 (126″ Wheelbase)—Fisher Bodies

2 Coupe	39-6127	Quarter windows, 2 opera seats, luggage and spare tire under deck
2 Convertible Coupe	39-6167	Fabric top, blind quarter, 2 opera seats, luggage and tire under deck
5 Convertible Sedan	39-6129	Built-in trunk, spare tire in trunk, fabric top, blind quarter
*5 Touring Sedan, 4-Door	39-6119	Built-in trunk, spare tire in trunk

Series 39-60S (127″ Wheelbase)—Fleetwood Body

*5 Special Sedan, 4-Door	39-6019S	Built-in trunk, spare tire in trunk, blind quarter, chrome window frames

Series 39-75 (141″ Wheelbase)—Business Cars

8 Business Touring Sedan	7523-L	Built-in trunk, spare tire in trunk, livery trim, 2 auxiliary seats
8 Business Touring Imperial Sedan	7533-L	Built-in trunk, spare tire in trunk, livery trim, Imperial division, 2 auxiliary seats

Series 39-75, Series 39-90 (141″ Wheelbase)—Fleetwood Bodies

	V-8 Style Nos.	V-16 Style Nos.	
2 Coupe	39-7557	39-9057	2 opera seats, spare tire under deck, quarter windows, deck lid
5 Coupe	39-7557B	39-9057B	Full width rear seat, quarter window, spare tire under deck, deck lid
2 Convertible Coupe	39-7567	39-9067	Fabric top, 2 opera seats, spare tire under deck, blind quarter, deck lid
5 Sedan, 4-Door	39-7519	39-9019	Built-in trunk, spare tire in trunk
5 Sedan—Division	39-7519F	39-9019F	Built-in trunk, spare tire in trunk, glass division
5 Formal Sedan	39-7559	39-9059	Built-in trunk, spare tire in trunk, glass division, blind quarter, leather roof, 2 opera seats
5 Town Sedan	39-7539	39-9039	Built-in trunk, spare tire in trunk, close coupled, blind quarter, metal roof
5 Convertible Sedan	39-7529	39-9029	Built-in trunk, spare tire in trunk, division, optional opera seats, fabric top, blind quarter
7 Sedan	39-7523	39-9023	Built-in trunk, spare in trunk, 2 auxiliary seats
7 Imperial Sedan	39-7533	39-9033	Built-in trunk, spare tire in trunk, Imperial division, 2 auxiliary seats
7 Formal Sedan	39-7533F	39-7533F	Built-in trunk, spare tire in trunk, Imperial division, blind quarter, leather roof, 2 auxiliary seats
7 Town Car	39-7553	39-9053	Built-in trunk, spare tire in trunk, blind quarter, leather roof, removable canopy over chauffeur's seat, 2 auxiliary seats

*Sunshine Turret Top optional.

The trunk or deck lid handles on all series now incorporates the license plate holder and light. All trunks and deck lids are also equipped with an interior flood light that turns on automatically when the lid is raised. These features are described in the Electrical section on page 12.

The series 60 Special does not have running boards; series 39-50 and 39-61 can be ordered either with or without running boards. The removal or installation of running boards can be easily performed in the service station.

Frame

Frames of new design are used on the 39-50 LaSalle and the 39-61 Cadillac. Fundamentally, these new frames are similar to the previous 50 and 60 frames, as they incorporate such features as the I-beam type of X-member, and side bars curved at the front to encircle the helical front springs.

The design of the new frames is indicated by the drawing (Fig. 1). The LaSalle and 61 Cadillac frames

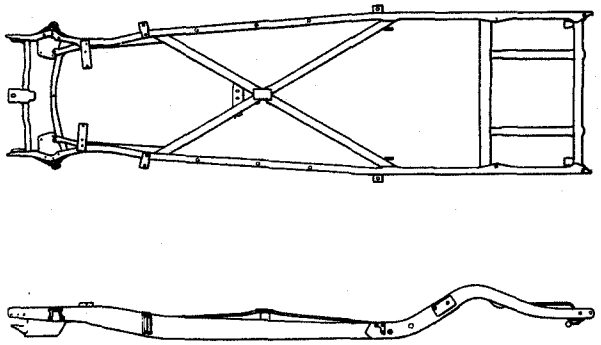

Fig. 1. Diagram of frame, Series 39-50 and 61.

are similar except for the differences in length as required by the different wheelbases, and for the X-member, which is somewhat heavier on the series 61 frame.

The frames used with LaSalle convertible body styles have X-members that are heavier than standard to provide greater rigidity. Series 61 convertibles also use a special frame, having additional bracing.

One change of interest to service men is the reduction in number of body bolt brackets to four. The body is secured to the frame at seven points on each side, but the bolts pass directly through the frame sidebar flanges at all points except the front and one intermediate point.

The frames used on 39-60S, 75, and 90 cars are the same as the corresponding 38-series frames, except for minor changes in such items as bumper mounting brackets and mounting holes for assembling the exhaust system and other similar parts.

Specifications

	39-50	39-61	39-60S	39-75	39-90
Wheelbase	120″	126″	127″	141″	141″
Tread—front	58″	58″	58″	60½″	60½″
Tread—rear	59″	59″	61″	62½″	62½″
Overall length	202½″	207¼″	214¼″	225⅛″	222″

COMMERCIAL CARS

	39-50	39-61	39-60S	39-75	39-90
Wheelbase	156½″	162¼″	...	161⅛″	...
Tread—front	58″	58″	...	60¾″	...
Tread—rear	61″	61″	...	62¾″	...
Overall length	239″	243½″	...	245⅜″	...

Front Wheel Suspension

The front suspension systems used on the 39-50 and 61 cars are the same in principle as the 38-series systems, but differ in several important features of construction. The systems used on these two series are identical, and the following description applies to both.

The lower suspension arms and steering knuckle supports have been redesigned for greater strength and for increased road clearance. These arms are steel pressings instead of forgings, and are formed perfectly straight to provide the added road clearance.

Rubber bushings are used at the inner ends of the lower suspension arms, in place of the threaded bolt construction. These bushings provide softer riding qualities and insulate the chassis more completely from road shock and noise. The use of these bushings also means four less lubrication points.

The lower suspension arms are supported upon stationary shafts bracketed to the frame front cross member, in the same manner as on previous series. The forward and rearward arms are riveted together to form the wishbone assembly, as shown in Fig. 2, and are serviced as a unit, which includes the mounting shaft. In case replacement of rubber bushings is necessary, the two arms can be disassembled by removing the four rivets that secure the spring and bumper pads to one of the arms, and reassembled with screws, nuts, and washers.

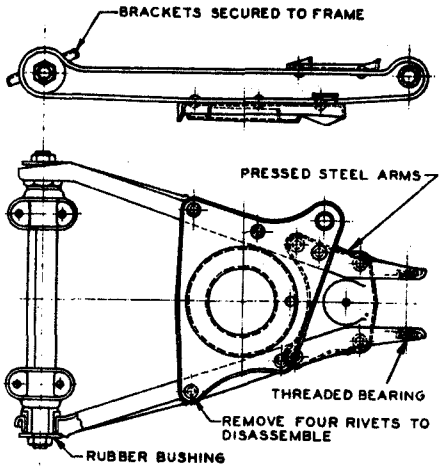

Fig. 2. Lower suspension arm, Series 39-50 and 61.

The shock absorber arms are new, although the front shock absorbers are unchanged from those used last year. New helical springs, slightly smaller in diameter, and new rubber bumpers are also required.

The front stabilizer rod is mounted in the same location as heretofore, but it is larger in diameter and has shorter arms than the 38-series stabilizer.

The front suspension systems used on the 39-60S and on the 39-75 and 39-90 are exactly the same as for the corresponding 38-series cars, except that the 39-75 and 90 front shock absorbers have slightly softer valving than used on the previous series.

The caster, camber, and knuckle bolt angle are new on 39-50 and 61 series. These figures are given in the specification table. The methods of adjusting front wheel alignment factors on 39-series cars are exactly the same as on the corresponding 38-series. Disassembly and reassembly operations are also unchanged.

Specifications

	39-50, 61	39-60 S	39-75, 90
Caster	$-1\frac{1}{4}$ to $-2\frac{1}{4}°$	$-\frac{1}{4}$ to $-1\frac{1}{4}°$	$-\frac{1}{4}$ to $\frac{1}{4}°$
Camber	$-\frac{1}{2}$ to $\frac{3}{4}°$	$-\frac{1}{4}$ to $\frac{1}{2}°$	0 to $\frac{1}{2}°$
Knuckle bolt angle	5° 6′	5° 44′	5° 1′
Toe-in (in motion)	0 to $\frac{1}{16}$″	0 to $\frac{1}{16}$″	0 to $\frac{1}{16}$″
(at rest)	$\frac{1}{32}$ to $\frac{3}{32}$″	$\frac{1}{32}$ to $\frac{3}{32}$″	$\frac{1}{32}$″ to $\frac{3}{32}$″

Caster and camber should be the same on both sides of the car within ½°.

Rear Wheel Suspension

The hypoid rear axles formerly used are continued with minor changes. One size of axle is used for 39-50, 61 and 60S cars, while the larger size is used for 39-75 and 90. The axle gear ratios are the same on all series as for the corresponding 38 series.

A compressible steel spacer is used between the two pinion bearings, as shown in Fig. 3. This type of spacer permits correct pre-loading of the pinion by tightening the yoke nut. This change does not affect service, as axle assemblies will not be serviced locally.

Other axle changes include relocation of the spring seats and shock absorber attachments on the 39-50 and 61 axles.

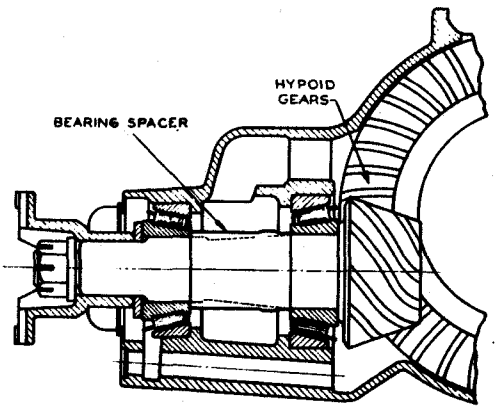

Fig. 3. Cross section of rear axle pinion.

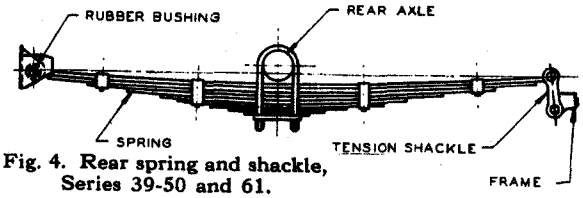

Fig. 4. Rear spring and shackle, Series 39-50 and 61.

The rear springs on series 39-50 and 61 are of similar design but not interchangeable with the springs for the corresponding previous series. The mounting of these springs is entirely new. The 39-50 and 61 rear springs are mounted inside the frame sidebar, attached to a spring bolt at the front and having tension type parallel link shackles at the rear, as shown in Fig. 4.

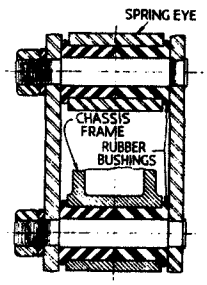

SECTION THRU SHACKLE

The spring shackles have rubber bushings, top and bottom, and rubber is also used at the spring bolt. This use of rubber throughout reduces road shock and also eliminates half a dozen lubricating points.

The cross link ride stabilizer is discontinued with this new spring arrangement. The shock absorbers have different arms and valving.

The rear spring suspension on 39-60S is entirely unchanged. On 39-75 cars, it is unchanged except for the rear shock absorbers, which are of new design, although they continue the 3-position manual adjustment. The 39-90 rear suspension is unchanged.

Brakes

The familiar self-energizing hydraulic brakes are continued on all 39-series cars, but with the following changes:

New design two-piece brake and clutch pedals, as illustrated in Fig. 5, are used on 39-50 and 61. These permit use of a new seal that prevents leakage of hot or cold air through the floor boards at the pedals. The brake master cylinder is mounted ahead of the pedal on these series, and is accessible from under the hood.

On 39-50 and 61, the front brakes have been changed in width from 2¼ to 2 inches, so that they are the same width as the rear brakes. This means that new drums and dust shields are used at the front. The brake piping on these series has been relocated to suit detail changes in the new chassis.

The 39-50 and 61 brake master cylinder has been changed by the addition of a stop for the piston operating rod, which permits a more positive adjustment of the operating rod, as follows:

Loosen the lock nut and turn the clevis until the pedal grommet is compressed to ¾-inch when the shoulder on the operating rod is up against the stop in the master cylinder. (See Fig. 5)

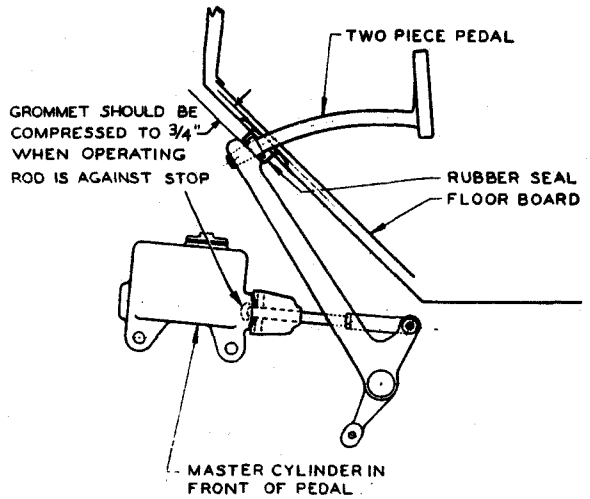

Fig. 5. Brake pedal layout and adjustment, Series 39-50 and 61.

Another important change has been made in the brake adjusting procedure, which affects the 39-50, 61 and 60-S brakes only. This change is the elimination of the eccentric adjustment for the secondary shoe. Changes in the adjustment procedure with this new construction are as follows:

1. After the road wheels and the inspection hole covers have been removed, and the piston operating rod and hand brake cables have been adjusted—

2. Insert a thin screw driver through the drum inspection hole cover at the center of the secondary shoe and pry the entire shoe assembly forward so that the primary shoe lining contacts the drum.

3. Establish a clearance of .015", one and one-half inches from each end of each secondary shoe, by readjusting the star wheel adjusting screw and the anchor pin, if necessary. This will provide the correct operating clearance for both the primary and the secondary shoe.

4. Repeat at all four wheels and road test the car.

A new hand brake lever is used in all series. It has a new thumb release that operates a roller clutch that holds the lever in any position.

Specifications

	39-50, 61	39-60S	39-75, 90
Brake Drums—			
Inside Diameter	12"	12"	14"
Out-of-round, not over....	.007"	.007"	.007"
Width of lining, front....	2"	2¼"	2¼"
rear.....	2"	2"	2¼"

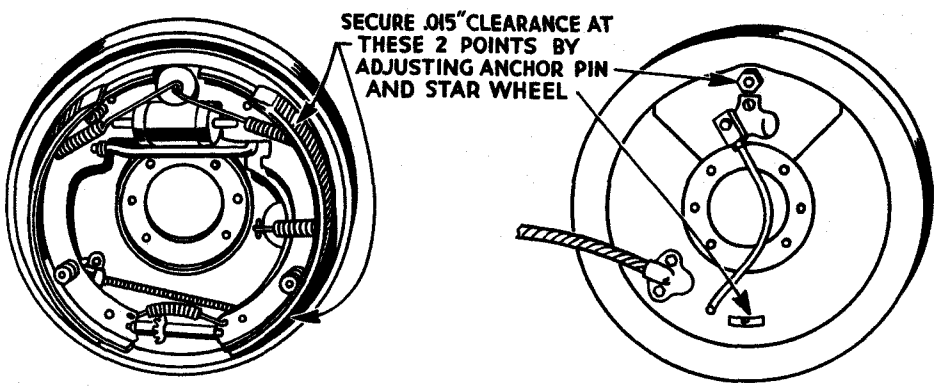

Fig. 6. Adjustment of brake shoes, Series 39-50, 61 and 60S.

Engine

The V-8 and V-16 engines used on the 38-series cars are continued without major changes on the corresponding 39-series. The engine sizes are unchanged.

A new piston ring arrangement is now used on V-8 engines. Its purpose is to increase cylinder bore durability, and provide better oil economy. The piston top land is wider, to move the top compression ring farther from the heat of combustion, and this top ring is narrower (3/32") and deeper, which increases its unit pressure.

The other compression rings and the oil rings are the same as for the 38-series, but all rings have been coated with ferric oxide, which provides longer wear and less possibility of scuffing, especially while the engine is new.

The valve lifter bodies on all series engines are also coated with ferric oxide to provide greater resistance to scuffing and scoring. The valves themselves do not have a slot in the valve heads. When lapping-in-valves, a vacuum cup attachment must be used in place of a screw driver blade.

An entirely new crankcase ventilating system is used on the 39-series V-8 engines. This new system utilizes the suction created by the motion of the car to draw the gases from the crankcase, instead of using engine suction.

The new system does not require external suction pipes, as nearly all parts are inside the engine. The operation of the system, illustrated in Fig. 7, is as follows:

Air enters a screened opening in the oil filler pipe and, after ventilating the crankcase, passes upward into the valve tappet compartments as in previous designs. Then, however, the gases pass back into a cored passageway between the engine rear bulkhead and the flywheel. An outlet fitting, which is a part of the oil pan, discharges the gases beneath the car.

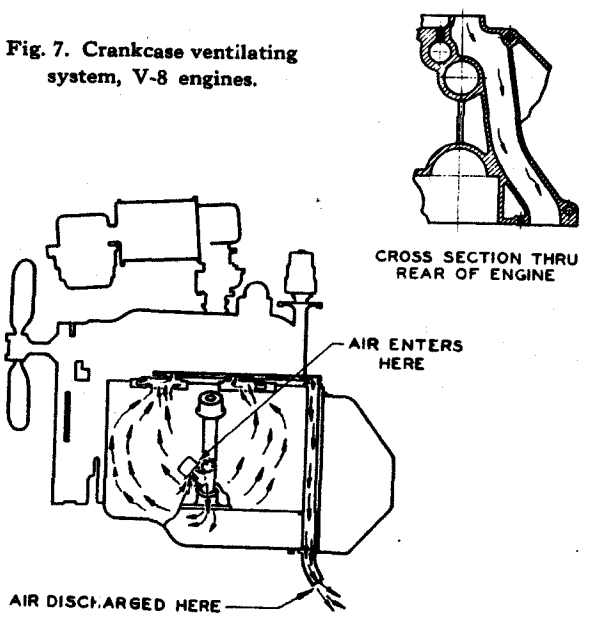

Fig. 7. Crankcase ventilating system, V-8 engines.

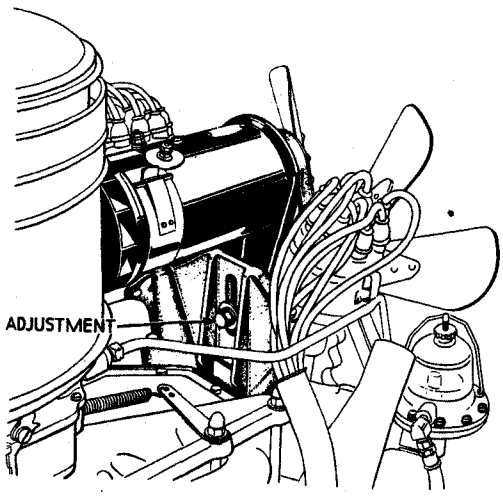

Fig. 8. Generator mounting, Series 39-90.

This new system requires the use of a new crankcase. It also requires a new oil pan, and it makes unnecessary the ventilating connections in the valve chamber covers, the intake manifold, and the air cleaner.

The new oil pan sump for V-8 engines is shorter and deeper than before, which concentrates the oil supply and tends to reduce aeration of the oil under all conditions, but especially when the pan is slightly overfilled. The oil capacity remains at 7 quarts, but the oil level indicator is calibrated differently from the 38-series indicator.

New fan brackets and belts are required on V-8 engines to lower the cooling fans as required by the new radiators. As the LaSalle bracket and belt now differ from the Cadillac V-8 units, the belts are no longer interchangeable. Neither of these 39-series fan belts are interchangeable with 38-series belts.

To increase generator belt life, the generator pulley on V-8 engines has been redesigned so that the contact between belt and pulley comes on the inside surface of the belt instead of along the vee shaped sides. There is no change in belt adjustment instructions.

The friction generator drive used on the 38-90 has been superceded by a belt drive, illustrated in Fig. 8. The generator is mounted high above the engine vee at the front, and is driven by a short belt from a pulley placed just behind the fan driven pulleys and rotating with them. This belt should be adjusted to the same tension as the fan belts.

New spark plugs, A.C. No. 104, with 10 mm. threads are used on all 39-series cars. Care must be taken when installing these plugs not to turn them down too tightly, as these small threads will strip more easily than 14 or 18 mm. threads. Hinckley-Myers has a socket wrench for these plugs. The gap is unchanged.

The Carter carburetor is continued on the LaSalle

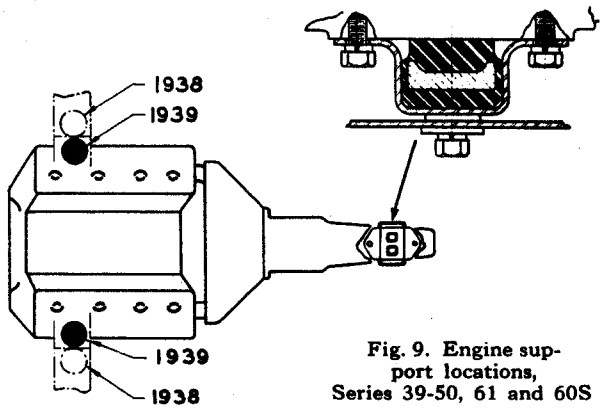

Fig. 9. Engine support locations, Series 39-50, 61 and 60S

and the V-16, and the Stromberg carburetor on the Cadillac V-8. The intake silencer on the LaSalle has been redesigned and shortened to fit the shorter hood.

The Carter carburetor has improved jet cooling, which will reduce tendencies to gas lock and make hot starting easier. Changes in the passages from the float chamber to the nozzles minimize the effect of steep hills and sharp turns on the fuel level in the nozzles.

A number of small drilled passages have been eliminated in the Stromberg carburetor, reducing the possibility of irregular operation due to obstruction by dirt or gum in the gasoline. The electric choke formerly used with the Stromberg carburetor has been superceded by a choke actuated by the heat of the exhaust manifolds.

New engine supports are used for 39-50, 61 and 60S series cars. The front supports employ the same rubber cushions as the 38-series, but they have been moved inward on 39-60S and inward and downward on 39-50 and 61. The rear support, illustrated in Fig. 9, is entirely new.

Service has been simplified, since none of the new supports are adjustable. The amount of compression of the rubber cushions is fixed by the design, and the attaching bolts need only be drawn up tightly.

The engine supports on 39-75 and 90 are unchanged. Adjustment of the rear support is made in the same manner as for the corresponding 38-series.

The clutches that were used on the 38-series cars are being continued without change on the corresponding 39-series cars.

Specifications

	39-50	39-60S, 61	39-75	39-90
Bore and Stroke	3⅜x4½"	3½x4½"	3½x4½"	3¼x3¼"
Piston Displacement	322 cu. in.	346 cu. in.	346 cu. in.	431 cu. in.
Taxable H.P.	36.45	39.20	39.20	67.6
Compression Ratio	6.25 to 1	6.25 to 1	6.70 to 1	6.75 to 1

Transmission

The transmission and syncromatic transmission control used on the 39-series cars differ from the 38-series design only in a few details, as follow:

Changes have been made in the interlock mechanism in the transmission case, which provide a more positive interlock and make shifting more convenient by shortening the throw of the transmission control lever. (Fig. 10)

The bracket that supports the transmission control shafts at the bottom of the steering column is now placed between the two levers, as shown in Fig. 11.

Adjustment of the lower lever (for second and high gear), is made with Tool No. J-1204 in the same

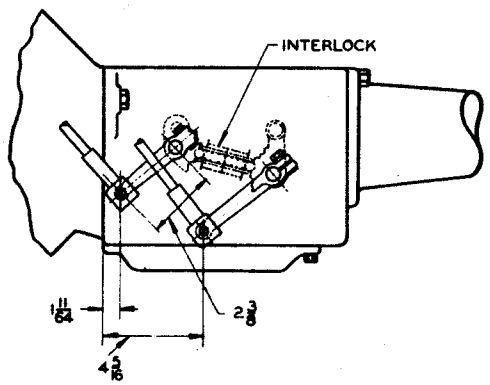

Fig. 10. Shifting mechanism at transmission case.

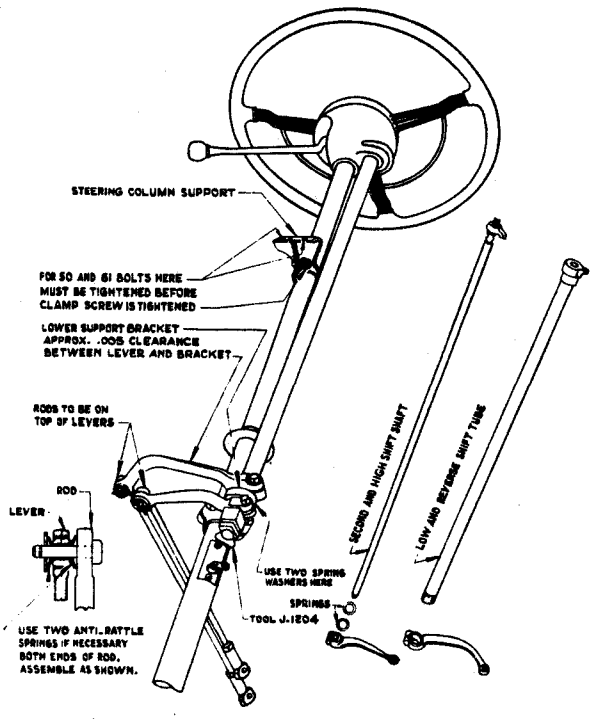

Fig. 11. Shifting mechanism on steering column.

manner as before. The other lever (for low and reverse gear) is then pushed down against the bracket until there is only .005-inch clearance, as measured with a feeler gauge. Two spring washers are used only between the bracket and the lower lever.

A change inside the transmission that reduces friction in reverse is the use of steel-backed babbitt thrust washers and steel-backed babbitt bushings for the reverse idler gears in place of the bronze parts formerly used.

The transmission itself is otherwise substantially the same. All transmission parts are interchangeable among the various 39-series cars (excluding the 39-90) except for the extension housing. One housing is used for 39-50, 60S and 61 series, another for 39-75, and another for 39-90.

Fuel Tank and Exhaust System

The fuel tanks and fuel feed systems of all 39-series cars are the same as for the corresponding 38 series, except for the following changes. A new gearless type gasoline gauge float unit is used on all series except 39-90. On all tanks fitted with this new unit, the fuel pipe is attached directly to the tank instead of to the gauge unit, as formerly. The gasoline tank capacities are given below.

The exhaust systems and mufflers are entirely new on all series. The mufflers on all 39-series are of the "three-pass" type illustrated in Fig. 12. This type is quieter and more durable than the previous straight through type. The outer shells of the mufflers are a double thickness of a corrosion-resisting steel, called "terne plate".

The muffler mountings for 39-50 and 61 cars are shown in Fig. 14. The muffler is supported at each end by new type rubber insulators, while the tail pipe is supported by a fabric and rubber insulator. The mufflers are lettered "inlet" at the front end.

The muffler system as used on 39-75 and 90 cars is illustrated in Fig. 13. The 39-60S system is similar, except that the exhaust pipe from the engine is carried down the right side of the chassis. These systems include a resonator chamber in addition to the transversely mounted muffler. Note that the flexible pipe used on 38-75 and 90 has been discontinued.

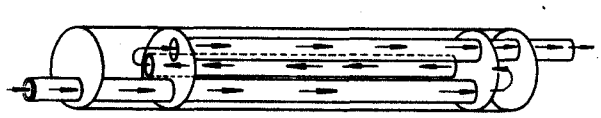

Fig. 12. Cross section of "three pass" muffler.

The mufflers used on 39-60S, 75 and 90 are interchangeable with those used on the corresponding 38-series. On 38-60S, however, new 39-type mounting brackets and insulators must be used. Only the 39-series mufflers will be supplied for service use.

Specifications

	39-50, 61	39-60S	39-75, 90
Gasoline tank capacity	22 gals.	22 gals.	26.5 gals.

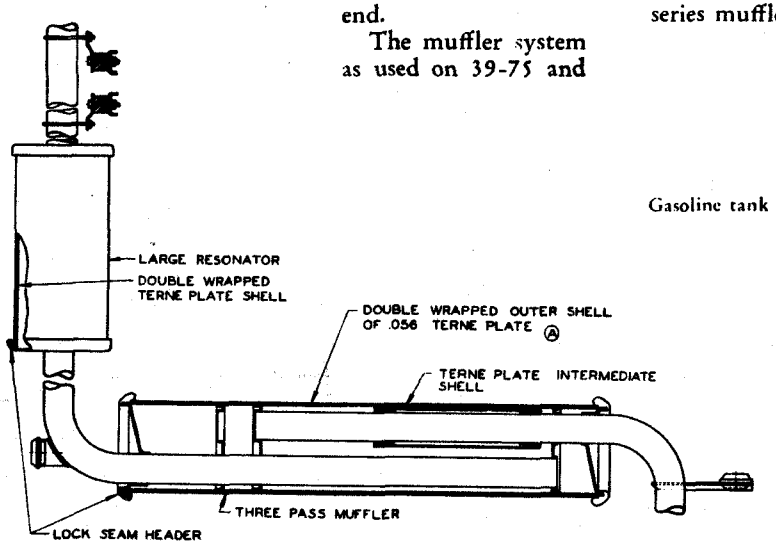

Fig. 13. Exhaust system, Series 39-75 and 90.

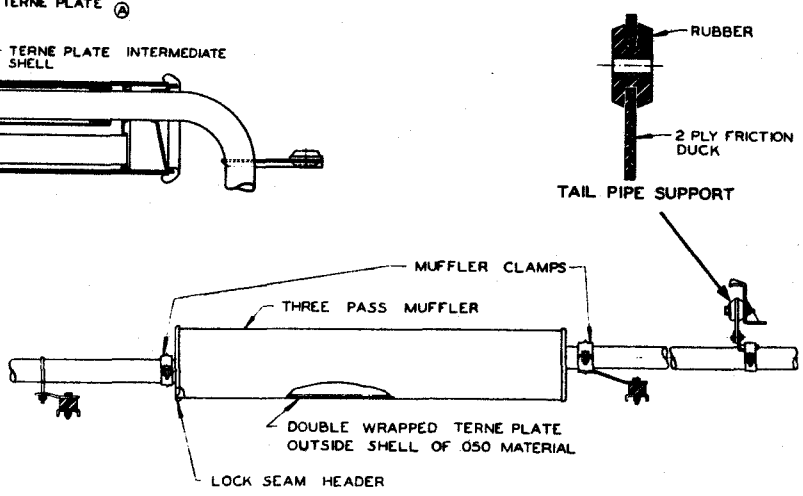

Fig. 14. Exhaust system, Series 39-50 and 61.

Steering

The steering gears on the 39-series cars are the same in design as the gears used on the corresponding 38-series, but they are not interchangeable with the previous models because of difference in the lengths of the columns and in the key-way location for the transmission control bracket.

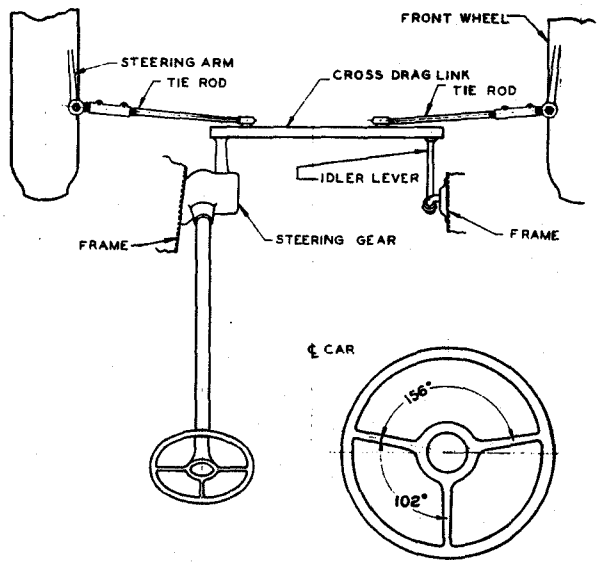

Fig. 15. Steering layout and connections, Series 39-50 and 61.

A new type of cross link steering, as shown in Fig. 15, is used on 39-50 and 61 series. The way in which this linkage operates will be evident from the drawing. The cross type steering used on 60-S cars has not been changed, nor has the steering system used on 75 and 90 series cars.

Steering wheels are new for all series. On LaSalle, the wheel hub is a rubber-covered steel forging. On all Cadillac series, flexible spoke wheels are standard equipment. A wheel of this type is available on LaSalle as an accessory. The two upper spokes are spaced widely apart on each type of wheel, to provide a clear view of the instrument panel. New horn buttons are used, which include a horn ring with the flexible spoke wheel.

Service operations are unchanged. Steering gear adjustments are made in the same manner as before. On 39-50 and 61 cars, toe-in is adjusted in the same manner as before, by turning both tie rod adjusters an equal amount. Steering connecting rod ends are adjusted by turning up tight and backing off to the first cotter pin hole.

Wheels, Rims and Tires

All wheel and tire sizes remain the same as the corresponding 38-series. Four slots have been added to each disc wheel on 39-50, 60S and 61 series. These slots are just inside the rim and equally spaced around the wheel. They permit the use of emergency chains and also assist in brake drum cooling.

Forged steel hubs are used for both front and rear wheels on 39-50, 60S and 61 in place of the former malleable iron hubs. The front wheel spindle diameter has been increased 1/32 inch on these series. New outer wheel bearings are used, which are not interchangeable with the 38-series bearings. New cones are used for the inner bearings.

Specifications

	39-50, 61	39S	39-75, 90
Rims—			
Diameter	16"	16"	16"
Width	4½"	4½"	5"
Tires—			
Size	7.00 x 16"	7.00 x 16"	7.50 x 16"
No. plys	4	4	6
*Inflation pressure	26 lbs.	28 lbs.	32 lbs.

*Inflation pressures, all series commercial chassis: 32 lbs. front; 38 lbs. rear.

Chassis Sheet Metal

The 39-series sheet metal parts are new in appearance, but very similar in construction to the 38-series parts.

The hood is of the familiar front opening type, but it has two new features. The first, used on 39-50 and 61 only, is a new hood support (Fig. 16) which is mounted in the center of the dash and lifts the hood at the center. The support is provided with counterbalancing springs to hold the hood in its raised position, as before. The hood hinges are entirely separate from this support.

The second change is a new hood latch, illustrated in Fig. 17. The latch is released by lifting the radiator ornament as before, but it is now unnecessary to reach

in and release the safety catch, since an automatic safety catch is formed as part of the hood latching mechanism, and both the main and safety catches are released by the ornament. This new latch is used on all 39-series excepting the 39-90, which retains the old type safety catch.

The hood side panels are removed in the same fashion as on the 38-series. Hood alignment can be corrected by loosening attaching screws and prying either the hood top panel or the radiator shell and fender assembly as required. The hood hinge holes are elongated to permit sideways adjustment of the hood top panel, and the mounting holes at the rear of the front fenders are elongated to permit up-and-down or forward-and-back movement of the fender assembly. The radiator tie rods can be shortened slightly, if required, to provide a better fit at the front of the hood.

The 39-60S, like the 38-60S, does not have running boards, but is fitted with decorative sill cover panels instead. Series 39-50 and 61 cars can be ordered either with or without running boards. Series 39-75 and 90 cars are available only with running boards. Either type of 39-50 or 61 car can be changed over to the other type by using a kit of parts which is available from the Parts Division, according to instructions which will soon be released.

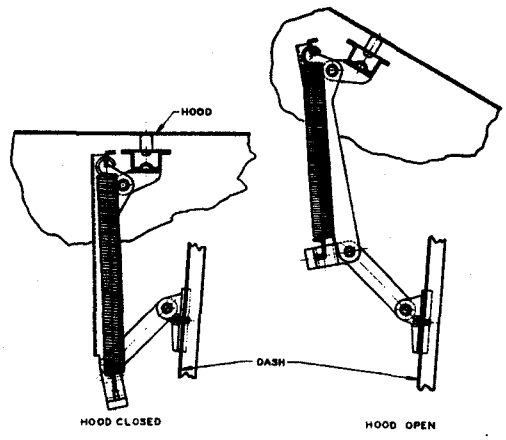

Fig. 16. Hood support bracket, Series 39-50 and 61.

The front and rear fenders, the radiator grille and side grilles, and the various splash pans are constructed so that they can be serviced individually in the same manner as heretofore.

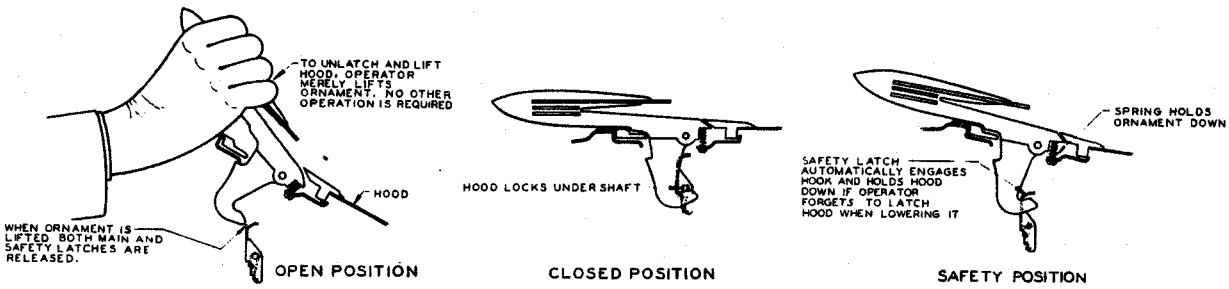

Fig. 17. Operation of hood latch, Series 39-50, 61, 60S and 75.

Chassis Electrical System

The electrical systems of the 39-series cars have been changed from the 38-series systems in the following details.

The battery on the 39-50 LaSalle is located under the left front floorboard, but it is the same battery as used on the 38-50. The batteries on the 39-61, 60S, and 90 are the same as those used on the corresponding 38-series, and they are mounted in the same locations, but changes in the sheet metal have improved accessibility on 39-61 and 60S. The same battery is used on 39-75 as is used on 39-60S and 61.

The charging rate of the generator used on 39-75 and 90 has been stepped up 4 amperes to a maximum of 28-32. Minor changes have been made in the generator brackets and pulleys on all series, as described in the "Engine" section. Otherwise, the generators are unchanged.

Starting motors and starting circuits are unchanged from the 38-series. A new starter clutch is used in all V-8 starting motors, however, so these units are not interchangeable between 39 and 38.

New "sea shell" type horns are used on all 39-series except 39-90. These have short die cast bells, and are mounted accessibly under the hood and on the hood cross brace. The horn relay on these cars is mounted on the front of the dash, next to the generator relay.

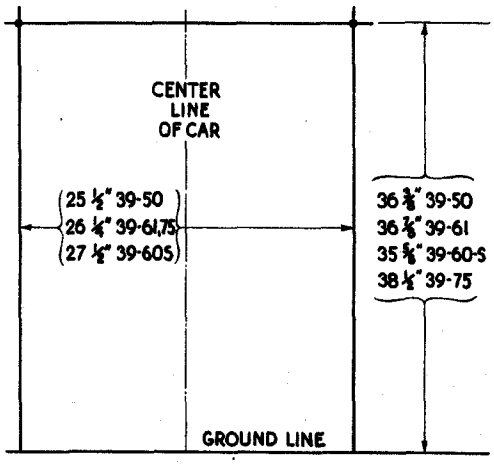

Fig. 18. Dimensions of headlamp center locations.

The 39-90 continues the long trumpet type horns mounted behind the radiator grille.

The long streamlined headlamps, although new in appearance, employ similar lenses, reflectors, and bulbs as before. The adjusting screws for aiming the lamps are more accessible. The vertical adjusting screw is at the bottom of the lamp, while the horizontal screw is at the inner edge of the lamp between the lamp door and the radiator casing. The location of the headlamp centers is given in Fig. 18, except for 39-90, which is the same as 38-90.

The rear license plate on all 39-series cars is mounted in the center of the trunk lid or rear deck, and is illuminated from below by a lamp that is a part of the trunk or deck lid handle (See Fig. 19). A single-contact three candle power bulb (Mazda No. 63) is used here. The combined stop and rear lamps are mounted on the fenders as heretofore, except on 39-50 and 61, where they are on the body near the fenders.

The license plate frames supplied as an accessory are held in place by clips within the frame which grip the metal edges tightly. To install them, remove license bracket cross bar and assemble lower tube of frame to the bracket.

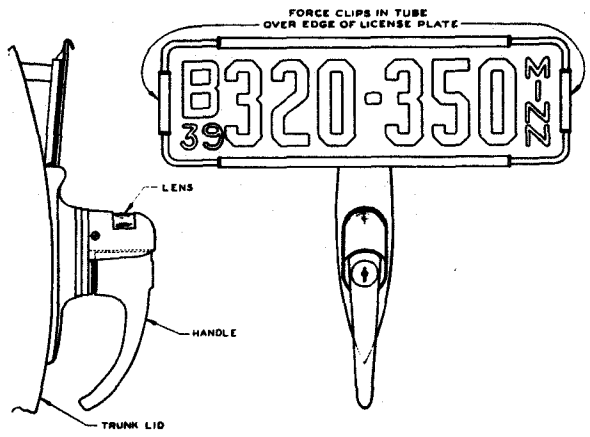

Fig. 19. License plate mounting and frame.

Place license plate in position in lower tube and hook clamp over plate at top. Assemble frame around plate so that it touches all around. Then, using both hands, strike the frame smartly from both sides at once, forcing the clips as far over the license plate edges as they will go. Finally, strike the frame from above to seat the top and bottom clips, and then tighten clamp nut securely.

To remove frame, place a wooden block inside the frame and use a hammer to drive tubes off license plate.

The trunk compartment has a floodlight, which is standard equipment on all 39-series. This light is connected in the lighting circuit so that it operates only when the rear lamps are turned on. When the trunk lid is opened, the light is turned on; when the lid is closed, the light turns off.

This light is operated by a novel "gravity" switch, in which contact is made or broken by two brass balls which roll back and forth as the trunk lid is raised or lowered. The switch is a part of the lamp mounting. A 1.5 candlepower (Mazda No. 55) bulb is used in this lamp.

The instrument panel design shown in Fig. 20 is used on all 39-series cars. The structural portion is integral with the body, and the visible portion is assembled to it. The individual instruments can be disassembled, first in pairs, and then singly. In removing or installing instruments, care must be exercised not to bend the pointers or to otherwise damage the delicate working parts.

To assure against damage to the pointers, which are mounted in *front* of the dials, stops are located on the back of the panel. When an instrument cluster is to be removed, the screws must be taken out and the cluster moved down until the stops are cleared, then the cluster can be lifted out without damage to the pointers.

The glass over the group of instruments can be replaced, but it is necessary first to remove the entire panel of instruments, after which the Phillip's screws holding the moulding can be taken out and the glass replaced. The glass over the center and right hand panels must be replaced *with* the channels. These parts can be removed individually after loosening the screws at the back of the panel.

The left hand portion of the panel is devoted to the cluster of instruments, which are the same as previously used except for the appearance. New brown and white markings provide high visibility, for both day and night driving. The only notable change is in the headlamp indicator, which is now a single red light that glows only when the "driving" beams are lighted. The lighting switches operate in the same manner as before.

The center portion contains decorative plates which are removed to make way for the controls of the new automatic radio, a single unit set that can be installed behind the grille. Below the grille are the plainly

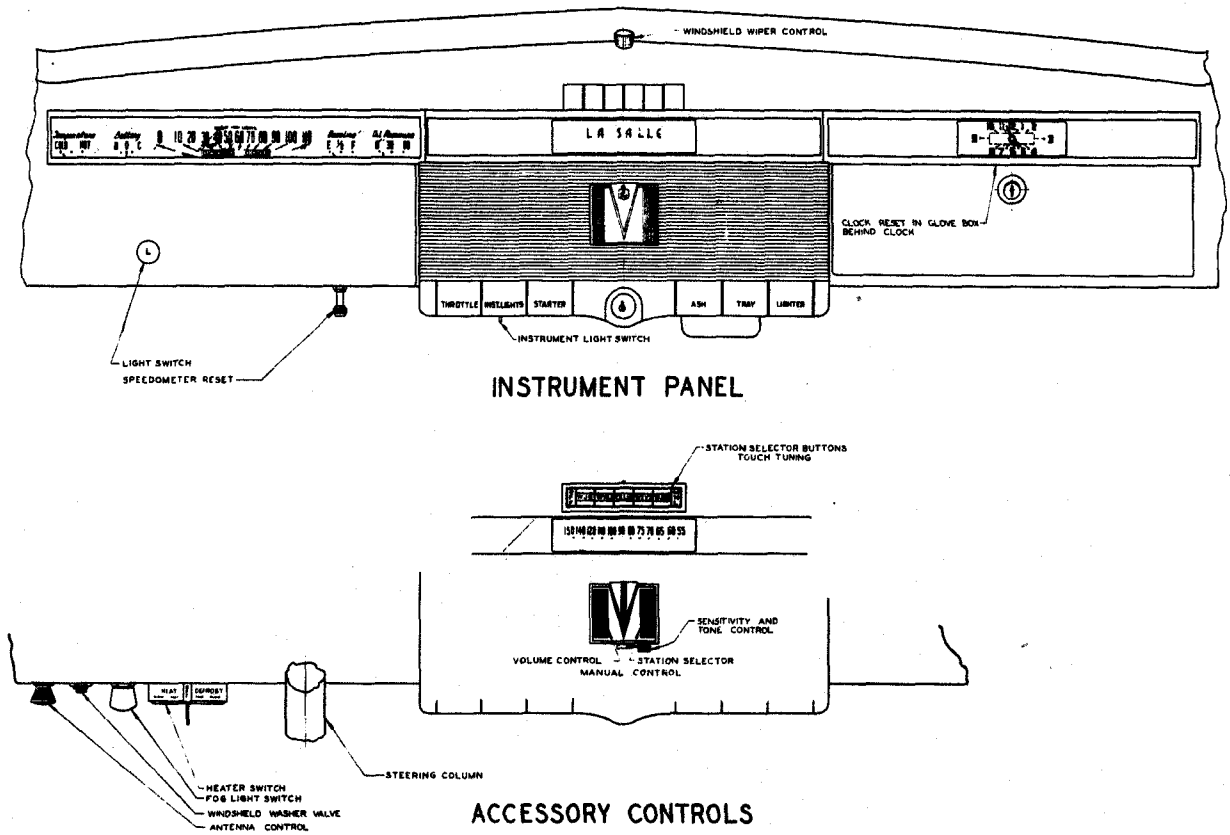

Fig. 20. Diagram of instrument panel and accessory control mountings.

marked controls for starter, throttle, etc., as shown. These controls are carefully recessed for added safety. The glow-lighted instrument dials and the lock lamp are controlled by the two-position instrument light switch in the same manner as on the 38-series cars.

The glove compartment occupies the right hand portion of the panel, and the electric clock, which is standard on all series, is mounted just above it. The clock resetting and regulating knobs can be reached from inside the glove compartment. The compartment lock and knob operate the same as before. A small floodlamp turns on automatically when the compartment door is opened. The switch is located at the upper left corner of the compartment door opening. A 1 candlepower (Mazda No. 51) bulb is used.

Mounting holes for installation of accessory control switches are a part of the panel. Locations of these various controls are shown in Fig. 20.

Radiator

New radiators are used on all 39-series cars except the 39-90. They are lower and wider to suit the new hood contours, and incorporate several changes which increase ruggedness.

The core is of the tube and fin type instead of the cellular type. This construction is particularly well adapted to the carrying of internal pressures built up by the pressure filler cap. The cores of all series (except 39-90) are 3⅜ inches thick. The cooling efficiency of the new design is the same as of the 1938 design.

The radiator top tank is changed in shape so that it no longer overhangs the core at the rear, yet the capacity has been increased one pint, which reduces aeration and water loss. Additional braces and stronger seams make the new cores more durable.

These changes permit the use of cooling system pressures up to 7 pounds, which raises the boiling point (at sea level) to 229°F. As this is the same pressure as used on 38-90 and 39-90, the same filler cap can be used on all 39-series cars.

The cooling systems of all 39-series V-8's are drained at three points, at the bottom of each cylinder bank, as heretofore, and at the radiator outlet elbow.

Three grilles are used on all series except the 39-90 —a central grille flanked by grilles in the fender "catwalks." The flow of air is illustrated in Fig. 21. With this arrangement, the total area of the grille openings

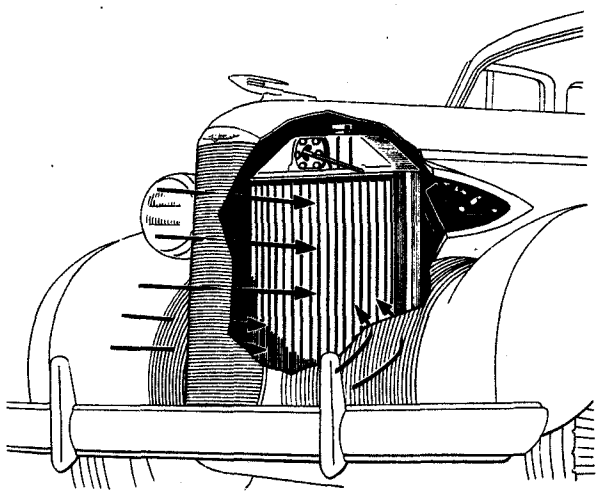

Fig. 21. Flow of air through radiator grille and side grilles (39-50 shown).

is increased, yet modern hood contours and appearance are permitted. The radiator grille is lower, which permits a lower hood and better visibility, which in turn increases safety.

Automatic radiator shutters are continued on all 39-series models.

Specifications

	39-50	39-61	39-60S	39-75	39-90
Radiator—					
Area of core in sq. in.	400	400	381	400	505
Thickness of core	3⅜"	3⅜"	3⅜"	3⅜"	3½"
Capacity of system	25 qts.	24½ qts.	24½ qts.	24½ qts.	30 qts.
Hose Connections—					
Cylinder head to radiator (2 used)					
Diameter, inside	1¼"	1¼"	1¼"	1¼"	1½"
Length	10⅛"	11¼"	11¼"	11¼"	10¼"
Radiator to water pump (2 used on 39-90)					
Diameter, inside	2"	2"	2"	2"	1¾"
Length	Molded Elbow	Molded Elbow	6¾"	6¾"	Molded Elbow

Lubrication

The lubrication of the 39-series cars has been very definitely simplified. This applies particularly to the 39-50 and 61 series cars, in which the number of grease gun connections have been reduced by 10—there being 4 less points on the front wheel suspension system, and 6 less on the rear suspension, which now has *no* lubricating points. There is no change in the number of lubricating points on 39-60S, 75 and 90 cars.

The lubrication schedule has also been simplified by the elimination of the 3,000 mile interval. This has been accomplished by changing inspection of the transmission and steering gear lubricant to the 1,000 mile interval, in line with generally accepted practice, and by moving the very small item of timer-distributor cam and wick lubrication to this interval also. This schedule can be applied to past model cars if desired.

Detailed lubrication instructions on the 39-series cars are given in the lubrication charts that accompany the Owner's Manuals. Extra copies of charts, if required for service station use, can be secured without charge on request to the Parts Department.

Engine oil recommendations, both as to viscosity and draining intervals, are unchanged from last year. Lubricant recommendations are also unchanged, except that the use of SAE 90 Hypoid lubricants in the transmission is now permissible, although SAE 90 gear oil is preferable.

The lubricant capacities on all 39-series cars are the same as for the corresponding 38-series.

Lubrication Schedule

Every 1000 Miles

Oil starter and generator oil cups.
Oil hand brake connections.
Oil clutch release mechanism.
Oil distributor cam wick.
Lubricate distributor grease cup.
Lubricate water pump.
Lubricate chassis connections.
Lubricate body hardware.
Add water to battery.
Add liquid to radiator.
Check tire inflation.
Inspect steering gear lubricant level.
Inspect transmission lubricant level.
Inspect rear axle lubricant level.

Every 2000 Miles

Drain and replace engine oil.
Clean filter in oil filter pipe
Clean carburetor air cleaner.

Every 6000 Miles

Check, repack and adjust front wheel bearings.
Drain, flush and refill transmission.
Drain, flush and refill rear axle.

Tools

No new special service tools are required for servicing the 39-series cars, but two commercial tools of sizes not previously used will be needed, and these should be secured promptly. These tools, which can be ordered from the Hinckley-Myers Company, are as follow:

No. 4 Phillip's head screw driver for 39-50 and 61 door hinges.

Special socket wrench for 10 mm. spark plugs.

Other References

1939 SERIES

CHASSIS PARTS LIST

CADILLAC SERIES 39-60S, 39-61, 39-75, 39-90

LA SALLE SERIES 39-50

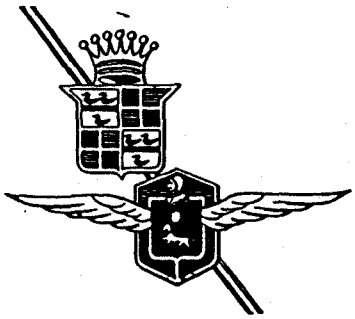

This Parts List is effective October 10, 1938

Parts and Prices are subject to change or removal without notice

CADILLAC MOTOR CAR DIVISION
GENERAL MOTORS SALES CORPORATION
DETROIT, MICHIGAN, U. S. A.

PRINTED IN U. S. A.

I N T R O D U C T I O N

This parts list includes all active Chassis parts supplied for service on 1939 Series LaSalle and Cadillac cars. Certain slow moving parts not included can be obtained by supplying the factory with a description of the part. The standard Cadillac grouping system is continued in this list and the pages can be inserted in their corresponding groups in the Master Chassis Parts List.

The character ";" following some of the part number indicates new parts not used on previous LaSalle or Cadillac models. Otherwise the same characters are used as in the Master Chassis Parts List to designate crated and special discount items.

On parts listed in more than one position, the Master Group Number is shown in parentheses in the descriptive column, and is designated by a star (*).

Body Parts for Fisher and Fleetwood bodies are listed in a separate Body Parts List. Parts for bodies mounted on commercial chassis should be ordered from the manufacturer of the body.

All parts for custom, commercial or right hand drive chassis and bodies listed in this Parts List are available for service repair purposes only. When such parts are desired for change-overs or other than repair purposes, submit list of material wanted to Factory Parts Department for availability.

The same instructions for ordering and returning parts as contained in the Master Chassis Parts List apply to all parts included in this list.

Changes in design during production are made at a definite Engine or Unit Assembly Number. The locations of these numbers are as follows:

	Series 39-50,60S,61,75	Series 39-90
Engine Number	On rough flat surface on rear portion of crankcase back of L.H.block,numbered at right angle with the crankshaft. Numbering to start from the top.	Upper rear L.H. corner of L.H. cylinder block,parallel with cylinder head.
Unit Chassis Number	Top surface of frame side bar, just ahead of dash, opposite steering gear	Top surface of frame side bar, just ahead of dash opposite steering gear.
Unit Engine Number	On lower end of rough flat surface on rear portion of crankcase back of the L.H. block, numbered parallel with the crankshaft	Upper rear R.H. corner of R.H. cylinder block.
Body and Style Number	On plate on left side of dash	On plate on left side of dash

ENGINE NUMBER CHART

	Engine No.	
LaSalle Series 39-50	2290001	to
Cadillac Series 39-60S	6290001	to
Series 39-61	8290001	to
Series 39-75	3290001	to
Series 39-90	5290001	to

BODY STYLES

Style No.	Body Type	Series	Wheelbase
39-5011	5 Pass. 2 Door Touring Sedan	39-50	120"
39-5011A	5 Pass. 2 Door Touring Sedan (Sunshine Turret Top Roof)	39-50	120"
39-5019	5 Pass. 4 Door Touring Sedan	39-50	120"
39-5019A	5 Pass. 4 Door Touring Sedan (Sunshine Turret Top Roof)	39-50	120"
39-5027	2 Pass. Coupe	39-50	120"
39-5029	5 Pass. Conv. Sedan	39-50	120"
39-5067	2 Pass. Conv. Coupe	39-50	120"
	Commercial Chassis	39-50	156"
39-6019S	5 Pass. Special Sedan	39-60S	127"
39-6019S-A	5 Pass. Special Sedan (Sunshine Turret Top Roof)	39-60S	127"
39-6119	5 Pass. 4 Door Touring Sedan	39-61	126"
39-6119A	5 Pass. 4 Door Touring Sedan (Sunshine Turret Top Roof)	39-61	126"
39-6127	2 Pass. Coupe	39-61	126"
39-6129	5 Pass. Conv. Sedan	39-61	126"
39-6167	2 Pass. Conv. Coupe	39-61	126"
	Commercial Chassis	39-61	126"
39-7519	5 Pass. Sedan (Fl.)	39-75	141"
39-7519F	5 Pass. Imperial Sedan (Fl.)	39-75	141"
39-7523	7 Pass. Sedan (Fl.)	39-75	141"
39-7523L	7 Pass. Business Sedan (Fl.)	39-75	141"
39-7529	5 Pass. Conv. Sedan (Fl.)	39-75	141"
39-7533	7 Pass. Imperial Sedan (Fl.)	39-75	141"
39-7533F	7 Pass. Formal Sedan (Fl.)	39-75	141"
39-7533L	7 Pass. Business Imperial Sedan (Fl.)	39-75	141"
39-7539	5 Pass. Town Sedan (Fl.)	39-75	141"
39-7553	7 Pass. Town Car (Fl.)	39-75	141"
39-7557	2 Pass. Coupe (Fl.)	39-75	141"
39-7557B	5 Pass. Coupe (Fl.)	39-75	141"
39-7559	5 Pass. Formal Sedan (Fl.)	39-75	141"
39-7567	2 Pass. Conv. Coupe (Fl.)	39-75	141"
	Commercial Chassis	39-75	161"
39-9019	5 Pass. Sedan (Fl.)	39-90	141"
39-9019F	5 Pass. Imperial Sedan (Fl.)	39-90	141"
39-9023	7 Pass. Sedan (Fl.)	39-90	141"
39-9029	5 Pass. Conv. Sedan (Fl.)	39-90	141"
39-9033	7 Pass. Imperial Sedan (Fl.)	39-90	141"
39-9033F	7 Pass. Formal Sedan (Fl.)	39-90	141"
39-9039	5 Pass. Town Sedan (Fl.)	39-90	141"
39-9053	7 Pass. Town Car (Fl.)	39-90	141"
39-9057	2 Pass. Coupe (Fl.)	39-90	141"
39-9057B	5 Pass. Coupe (Fl.)	39-90	141"
39-9059	5 Pass. Formal Sedan (Fl.)	39-90	141"
39-9067	2 Pass. Conv. Coupe (Fl.)	39-90	141"

COLOR COMBINATION

Lacquers are not carried in stock. The factory will secure and ship as quickly as possible any standard colors not available locally, but cannot guarantee the color to be an exact match of that on the car, as all colors may change slightly due to olimatic conditions and exposure to the weather.

Comb. Code No.		BODY AND SHEET METAL Color Name	Color No.	Mfgr.	WHEELS Color Name	Color No.
51		Black	20498	R & M	Black	94-005
					Triton Green	94-20957
					Corsican Red	94-20940
52		Antoinette Blue	22290	R & M	Antoinette Blue	94-20871
53		Cavern Green	023355	R & M	Triton Green	94-20957
54		Marblehead Gray	20198	R & M	Corsican Red	92-20940
55		Dragoon Blue Iridescent	P.S.261	R & M	Kashan Blue	94-3888
56		Piedmont Green Iridescent	P.S.371	R & M	Piedmont Green Iridescent	182-20948
57		Franconia Biege Iridescent	P.S.875	R & M	Franconia Biege Iridescent	182-20951
58		Ox-Blood Maroon Iridescent	P.S.608	R & M	Ox-Blood Maroon Iridescent	182-20955
59		Monterey Blue Iridescent	P.S.258	R & M	Monterey Blue Iridescent	182-20947
60		Trinidad Gray Iridescent	P.S.183	R & M	Corsican Red	92-20940
61		Empire Green	023354	R & M	Empire Green	92-20929
62		Kingston Gray	020161	R & M	Kingston Gray	92-20894
*63	†	Ludington Green	23459	R & M	Ludington Green	94-20952
	†	English Gray	21147	R & M		
*64	†	Silver French Gray Iridescent	P.S.106	R & M	Monterey Blue Iridescent	182-20947
	†	Monterey Blue Iridescent	P.S.258	R & M		

STANDARDIZED COLORS-ALL CARS

Radiator Grille - Center	39-50	White Dulux and Chrome	94-20850
	39-60S,61,75	Body Color and Chrome	
	39-90	Chrome	
Radiator Grille - Side	39-50,60S,61,75	Black Dulux and Chrome	94-005
Hood Ventilator	39-50	White Dulux and Chrome	94-20850
	39-60S,61,75	Black Dulux and Chrome	94-005
Steering Gear Housing Tube, Wheel Hub, Bracket and Gear Shift Housing Tube, Lever and Hand Brake	All Series	Cocoa Brown	242-53199
Wheel Stripe	All Series	Pale Gold Bronze	

* Used on 39-6019S only
† Belt Moulding and above
† Below Belt Moulding and Fenders