GENERAL

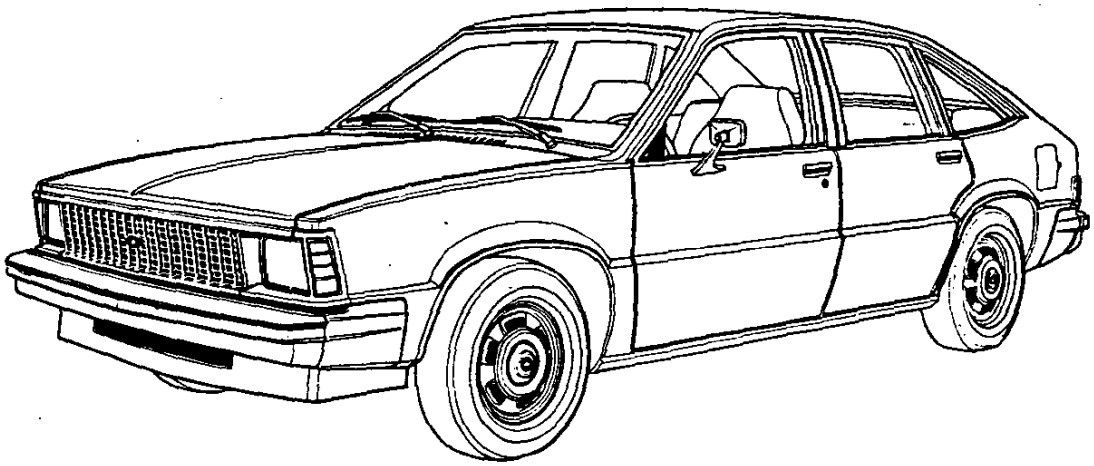

MODEL IDENTIFICATION 2

SERIAL NUMBERS AND IDENTIFICATION 3

EXTERIOR EQUIPMENT 4-5

INTERIOR EQUIPMENT 6-7-8

EXTRA COST EQUIPMENT 9-10-11

CUSTOM INTERIOR OPTION RPO B18 12

DELUXE EXTERIOR OPTION RPO B57 12

"X11" SPORT EQUIPMENT OPTION RPO B4X 13

AIR CONDITIONING EQUIPMENT 14

MODEL IDENTIFICATION

'11' STYLE

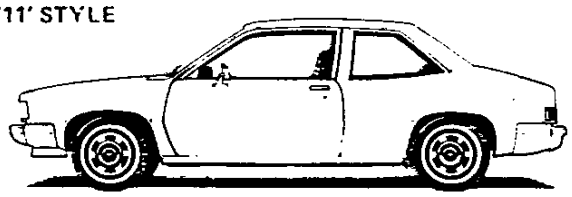

BODY	SERIES NAME	BODY STYLE	MODEL DESIGNATION	PASSENGER
X-CAR	CITATION	2-Dr. Coupe	1XH11	5
		2-Dr. Club Coupe	1XX11	5
		2-Dr. Hatchback Coupe	1XX08	5
		4-Dr. Hatchback Sedan	1XX68	5

'08 STYLE'

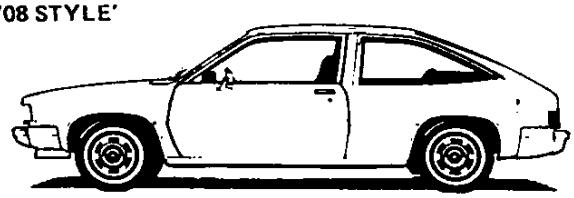

'68' STYLE

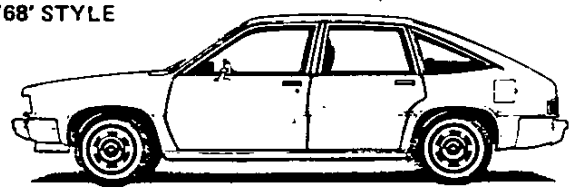

ONLY BASIC DESIGNATIONS SHOWN

VEHICLE IDENTIFICATION NUMBER

Vehicle Designation Interpretation

1 X 68 5 A W 100001

- 100001 — Sequential Number
- W — Assembly Plant (*)
- A — Model Year 1980
- 5 — Engine Type (**)
- 68 — Body style (last two digits of model number
- X — Car line and Series (***)
- 1 — Make ("1" for Chevrolet)

*W – Willow Run, Michigan – GMAD
T – Tarrytown, New York – GMAD
6 – Oklahoma City, Okla – GMAD
**5 – L4-2.5 Liter (90 H.P.)
7 – V6-2.8 Liter (115 H.P.)
***X – Citation Models

EXAMPLE: The twenty-fifth Chevrolet vehicle built at Chevrolet Willow Run if it were a 1XX68 model Citation sedan with a L-4 Liter (90 H.P.) engine would bear VIN Number 1X685AW100025.

Location . . . . . Stamped on plate attached to top left hand of instrument panel.

TRANSMISSION IDENTIFICATION

Example: X9E01D

Type Designation	Source Designation	Model Year 1980	Production° Month & Date
AU	X (Muncie)	9	E01D

AU	4-Speed	L4-2.5 Liter Engine / V6-2.8 Liter Engine	X - Muncie
7PZ	3-Speed Auto.	L4-2.5 Liter Engine / V6-2.8 Liter Engine	H - Hydramatic

Location:

4-Speed . . . . . Stamped on, Top right hand surface of the clutch housing to transmission case mounting flange.

3-Speed Automatic . . . . . Stamped on plate, rear right hand side of transmission case.

o-Month: E denotes May; (see below) 01 denotes 1st day
Alpha Characters used in identifying the calendar Month

A - January	D - April	K - July	R - October
B - February	E - May	M - August	S - November
C - March	H - June	P - September	T - December

*-The letter "D" or "N" following the date numerals indicates day or night shift, on automatic only.

ENGINE IDENTIFICATION

Example: T1210CNF

Source Designation	Production* Month & Date	Type Designation
T (Tonawanda)	1210	CNF

2.5L, 151 Cubic Inch L4 Engine (RPO LW9)

- Regular production engine, 4-speed
- Regular production engine, 3-speed automatic

2.8L, 173 Cubic Inch V6 Engine (RPO LE2)

CNF - Optional, 4-speed
CDZ - Optional, 3-speed automatic

Location:

L4, 4-Cylinder engine . . . . . Stamped on right hand side of cylinder block.

V6, 6-Cylinder engine . . . . . Stamped on a machined surface, located on front pad of cylinder and case ahead of inlet manifold.

* - Month: December, 12; 10th day of December 10.

FWD AXLE IDENTIFICATION

– 3.32 Axle, 4-Speed
– 2.53 Axle, Auto.-LW9
– 2.84 Axle, Auto.-LE2

Location, Identification Number, Label on the outer face of the splash shield, near the edge, where visible.

See Power Train Section for additional information.

STANDARD AND OPTIONAL EXTERIOR FEATURES

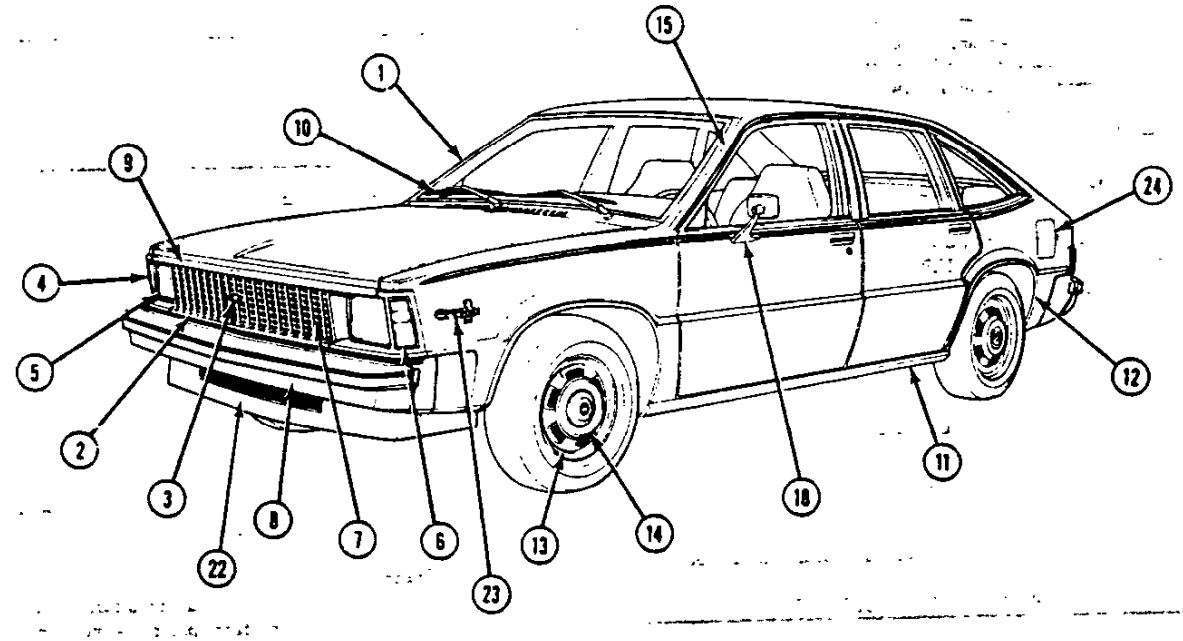

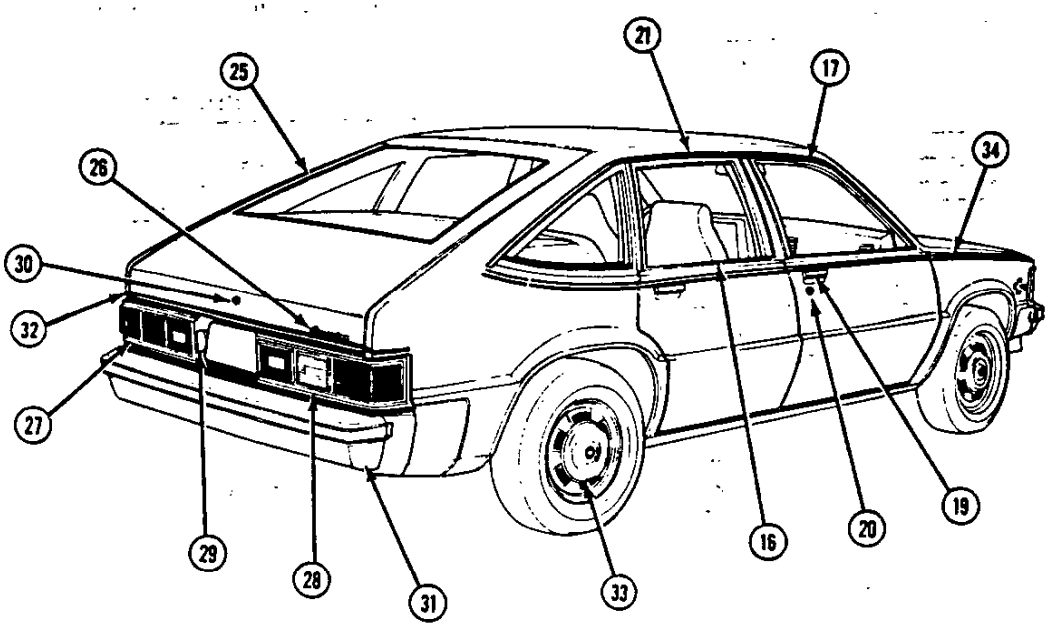

STANDARD EQUIPMENT EXTERIOR

		BASE COUPE 1XH11	STANDARD 1XX00
FRONT			
1	Windshield Molding–Bright	X	X
2	Radiator Grille–Argent Painted Plastic	X	
2	Radiator Grille–Chrome Plated Plastic		X
3	Grille Emblem–Chevrolet "Bow-Tie". Gold Plastic Insert	X	X
4	Headlamp Bezel–Bright Plated Plastic	X	X
5	Rectangular Headlamps–Single Type	X	X
6	Side Marker Lamp. Sonic Welded Unit. Amber Lens, Bright Plastic Bezel	X	X
7	Parking and Turn Lamps. Crystal Lens, Amber Bulb (located behind grille)	X	X
8	Front Bumper–Chrome Plated Steel. Flexible End Caps Painted Body Color	X	X
9	Hood Molding–Bright Aluminum Stamping	X	X
10	Windshield Wipers–Two Speed, Washers. Black Arms and Blades	X	X
22	Front Valance Panel-Polyethylene Molded in Body Color	X	X
SIDE			
11	Rocker Molding–Bright (Wide)		X
12	Wheel Opening Moldings–Front and Rear		X
13	Semi-Styled Wheels – Painted Bright Argent	X	X
14	Hub Cap–Bright. Red Paint in Center	X	X
15	"A" Pillar Molding–Painted Body Color	X	X
16	Bright Bailey Strip, Doors and Quarters – 10 mm		X
18	Rear View Mirror – Manual	X	X
19	Door Handles–Bright	X	X
20	Keylock Cover–Bright	X	X
–	Plastisol on Rocker Panel, Lower Areas of Front Fenders and Quarter Panels	X	
–	Plastisol on Lower Areas of Front Fenders and Quarter Panels		X
21	Roof gutter molding	X	X
23	Car line nameplate. Chrome with red, white, blue ribbon	X	X
24	Fuel filler door, front hinged. Unleaded fuel label inside.	X	X
REAR			
25	Back Window Molding – Thin Black Plastic (a)		08-68
25	Back Window Molding–Bright Aluminum	X	11
26	Deck "Chevrolet" Nameplate–Bright – 140 mm	X	X
27	Taillamp. Red Tail, Stop, Turn, Crystal Back-up Lenses. Includes Side Marker Function. Bright Hot Stamp	X	X
29	License Lamp–Crystal Lens. Part of Taillamp. Gray paint on pocket.	X	X
30	Deck Keylock–Bright	X	X
31	Rear Bumper–Chrome Plated Steel. Flexible End Caps Painted Body Color	X	X
32	Body Rear Pinstripe		X
	DELUXE EXTERIOR – RPO B57		
17	Door and Quarter Scalp Moldings–Bright (RPO B90 type)		X
28	Taillamp. Same as Standard Series Unit except Additional Hot Stamp On Lens and Center Lens Cavity Amber for Turn Signal		X
33	Wheel Trim Covers (RPO P01 type)		X
34	Body Side Accent Stripe (RPO D85 type)		X

(a) Black to be changed to bright 2-3 months after start of production.

STANDARD EQUIPMENT
INTERIOR

SEATS AND FLOOR COVERING	1XH11	1XX11	1XX08	1XX68
Front Bench Seat, 3/8" Poly Padding, Individual Backrest and Integral Head Restraints for Coupes	X	X	X	
Front Bench Seat, 3/8" Poly Padding, with Integral Head Restraints for Sedans			X	
Rear Seat 3/8" Poly Padding, Full Width, Coupes	X	X		
Rear Seat 3/8" Poly Padding, Full Width, Folding Rear Seat Hatchback Models			X	X
Front Seat Back Latches – Black Knob	X	X	X	
Folding Rear Seat Back Lock – Vinyl Loop Control			X	X
Front Seat Fore-Aft Adjuster – Black Knob	X	X	X	X
Front Seat Hinge Arm Cover – Color Keyed	X	X	X	
Seat Belts, Two Front Combination Seat and Inertia Reel Shoulder Belts for Driver (with Reminder Light and Front Passenger Pushbutton Buckles	X	X	X	X
Rear Seat Lap Belts (3-sets) Locking Outer Retractors, Pushbutton Buckles	X	X	X	X
Carpet Floor Covering, Molded One-Piece 9.5 oz. Carpet with 3 oz. Latex Backing	X	X	X	X
Load Floor Carpeting			X	X
Truck Floor Mat	X	X		

STANDARD EQUIPMENT
INTERIOR

INSTRUMENT PANEL	BASE COUPE 1XH11	STANDARD 1XX08-11-68
Instrument Panel. Structural Foam Retainer, Urethane, Foamed with Vacuum Formed Vinyl Cover	X	X
Air Outlets-Center. Color Keyed Bezels. Barrels Bright Hot Stamp. Black Plug with Hot Stamp in Cluster (LH)	X	X
"BRAKE" Warning Light (Red)	X	X
LH Turn Signal (Green)	X	X
Linear Speedometer. 5-85 MPH (55 Accented), 0-140 KPH. Odometer	X	X
High Beam Symbol (Blue)	X	X
RH Turn Signal (Green)	X	X
Emission Control Warning "CHECK ENGINE" (Amber) California	X	X
Radio Speaker and Grilles. Monaural Radios	X	X
AM Radio		X
Radio Hole Cover	X	
Heater Control – Steel and Plastic	X	X
Defrost Outlet – LH and RH. Includes Grilles	X	X
Trim Plate with "Chevrolet" and Bright Bead. Injection Molded ABS		X
Glove Box. Injection Molded Propylene Box with Living Hinge. Structural Foam Door with Two Cup Impressions on Inner Surface	X	X
Glove Box Lock		X
Glove Box Latch	X	
Ash Tray. Phenolic Receiver, Steel Retainer.	X	X
Cigarette Lighter (in Ash Tray)		X
Instrument Cluster Bezel. Injection Molded ABS, Gloss and Textured Black Finish with Bright Hot Stamp Beads and Letters	X	X
Clock Hole Cover. Sheet Metal.	X	X
Steering Column Cover. Injection Molded ABS.	X	X
Fuel Gauge	X	X
Warning Lights, Top to Bottom: "FASTEN BELTS", "OIL/CHOKE", "GEN", "TEMP". White Letters and Symbols on Red Lens.	X	X
Headlamp Switch. Includes Dome Light Control. Black Plastic Knob with Bright Face	X	X
"Smart Switch" on Steering Column. Controls Turn Signals, Headlamp Beam, Windshield Wiper and Washer with Mist Feature Black Knob.	X	X

STANDARD EQUIPMENT
INTERIOR

ROOF AND PILLARS	1XH11	1XX11	1XX08	1XX68
Headliner, Cloth Covered Form Scored, Soft Foam Core	X	X	X	X
Dome Lamp – Roof Center	X	X	X	X
Sunshades, Light Weight Molded	X	X	X	X
8-Inch Rear View Mirror – Black Housing	X	X	X	X
Black–Painted Rear View Mirror Support, Bonded to Windshield	X	X	X	X
Painted Metal Windshield Pillars	X	X	X	X
Painted Metal Hatch Pillars			X	X
Ventilation Relief Valve with Black Grille (Located in Door Lock Pillars)	X	X	X	X
Front Door Jamb Switches – RH & LH		X	X	X
Front Door Jamb Switch – LH Only	X			
Coat Hooks (2)	X	X	X	X

DOOR AND QUARTER PANEL				
Door Panels, Full Formed Plastic	X	X	X	X
Front Door Armrest, Soft Vinyl Pad	X	X	X	X
Door Handle Bright with Black Escutcheon and Bright Knob with Red Warning Area	X	X	X	X
Bright Door Window Regulator Handle and Knob	X	X	X	X
Quarter Trim Panels, Formed Plastic	X	X	X	X
Cowl Kick Pads, Color-Keyed Formed Plastic	X	X	X	X

EQUIPMENT	RPO	ACC
MODEL OPTIONS		
CUSTOM INTERIOR	B18	
DELUXE EXTERIOR	B57	
SPORT EQUIPMENT 'X11'	B4X	
QUIET SOUND GROUP	BS1	
QUIET SOUND GROUP/REAR COMPARTMENT DECOR	BS2	
POWER TEAMS		
ENGINE L4 – 2.5 Liter	LW9	
ENGINE V6 – 2.8 Liter	LE2	
TRANSMISSION, 4-Speed Manual (Base)	MM4	
TRANSMISSION, 3-Speed Automatic	MX1	
AXLE – Front 2.53 Ratio	F16	
AXLE – Front 2.84 Radio	F17	
AXLE – Front 3.32 Ratio	F25	
FACTORY INSTALLED REGULAR PRODUCTION TIRES		
P185/80R13 Glass Belt Radial White Stripe	QBQ	
P185/80R13 Steel Belt Radial White Stripe	QAM	
P185/80R13 Steel Belt Radial Blackwall	QAT	
P205/70R13 Steel Belt Radial White Stripe, Requires F41	QDB	
P205/70R13 Steel Belt Radial White Letter, Included in B4X, Requires F41	QDT	

EXTRA COST EQUIPMENT

EQUIPMENT	RPO	ACC
Sun Roof – Glass, Vista-Vent Type. Removable, (Not Available with V55)	AD3	
Belts - Seat and Front Shoulder (Deluxe) Color-Keyed	AK1	
Seat – Reclining RH Backrest – Requires Coupe Type Front Seat or Bucket Seat	AT6	
Locks – Power Door	AU3	
Glass – Tinted, Soft Ray	A01	
Glass – Windshield Tinted, Fleet or Canada Only	A02	
Windows – Power	A31	
Seat – Special Contour Bucket, Requires B18 (1XX00 Models)	A51	
Windows – Rear Quarter Swing Out – Includes RH and LH Remote Controls	A70	
Lock – Glove Box (Standard Equipment on 1XX00)	A99	
Quiet Sound Group – Included in B18	BS1	
Quiet Sound Group/Rear Compartment Decor – Included in B18	BS2	
Sport Equipment (1XX08-11)	B4X	
Custom Interior (1XX00)	B18	
Mats – Floor (Front and Rear) – Color-Keyed. Six Colors.	B37	X
Deluxe Exterior (1XX00)	B57	
Molding – Rocker Panel – Standard on 1XX00, Black Paint Added with B4X	B83	
Molding – Body Side, Bright with Black Insert – Included in D84	B84	
Molding – Side Window Reveal – Included in B4X and B57, Requires D85 on 1XH11	B90	
Guards – Door Edge	B93	X
Molding – Wheel Opening, Standard on 1XX00, Includes B83 on 1XH11	B96	
Washer and Wiper – Windshield, Intermittent	CD4	
Defogger – Rear Window, Electric – Includes K81 Delcotron	C49	
Air Conditioning (See Page 14 for Content)	C60	
Switch – RH Front Door Jamb – Standard Equipment on 1XX00	C80	
Mirror – Inside Rear View – Tilt. Included in B18	D31	
Mirror – Remote Control Outside Rear View, LH Chrome	D33	
Mirror – Outside Rear View – Sport, LH Remote, RH Convex Manual Body Color, Included in B4X	D35	
Console – Front Compartment Floor, Requires A51 Bucket Seats (1XX00)	D55	
Custom Two-Tone Paint, Includes B84 and D85, Requires B96 on 1XH11	D84	
Accent Stripe – Body Side Upper, Included in D84, B4X and B57	D85	
Suspension Heavy Duty, Front and Rear	F40	
Sport Suspension, Front and Rear – Included with B4X – Requires QDT or QDB	F41	
Brakes – Vacuum Power, Required with LE2, C60	J50	
Heater – Engine Block (Canadian Only) Used Only with Z49	K05	X
Control – Automatic Speed, Mechanical Design, Only with J50 and MX1	K30	X
Delcotron – 70 Amp, Included with C60	K73	
Wheel – Sport Steering, Included in B4X	NK3	
Wheel – Tilt Steering, Comfortilt	N33	
Steering – Power, Required with C60 Air Conditioning	N41	
Wheel Covers – Wire	N95	
Covers – Full Wheel Trim, Included in B57	P01	X
Deluxe Wheel Trim Rings and Hub Caps, Included in B4X, Includes P06	P03	
Rings – Wheel Trim, Included in P03	P06	
Lighting Auxiliary	TR9	
Lamp – Luggage Compartment (U25)		
Lamp – Underhood (U26)		
Lamp – Glove Compartment (U27)		
Lamp – Ash Tray (U28)		
Lamp – Courtesy (U29)		
Buzzer – Headlamp on (T63)		
Battery – Heavy Duty - 4000 Watts	UA1	
Radio AM/FM Stereo/8-Track Tape Deck (Includes U76, UP8, UX6)	UM2	

EQUIPMENT	RPO	ACC
Radio AM/FM/Stereo/Cassette Tape Deck (Includes U76, UP8, UX6)	UN3	
Radio AM/FM/Stereo/CB, Includes U83 Tri-band Power Antenna, UP8, UX6	UP6	
Speakers – Dual Front and Rear Included in U58, UM2, UN3, UP6	U92	
Horns – Dual	U05	
Speedometer – Export, Kilometer Scale and Odometer	U18	
Gage Package – Instrument Panel with Tach	U21	
Gage Package – Instrument Panel with Clock	U22	
Clock – Electric (Non-Digital)	U35	
Lighter – Cigarette (Standard Equipment on 1XX00)	U37	
Radio – AM/FM Stereo, Pushbutton (Includes UP8, UX6, U76)	U58	
Radio – AM Pushbutton, Standard Equipment for 1XX00, Includes UP7, U76	U63	
Radio – AM/FM Pushbutton, Includes UP7, U76	U69	
Antenna – Windshield (Standard Equipment for 1XX00, Optional Equipment for 1XH11) Not Used with UP6	U76	
Speaker – Rear Seat (Single) Requires U63 or U69	U80	
Bumper Rub Strip, Front and Rear, Included in B4X	VE5	
Heavy Duty Radiator – N.A. with NB2, LE2, MX1 C60 Combinations	V08	
Bumper Guards – Front and Rear, Includes, Front (V31), Rear (V32)	V30	
Roof Carrier, Not Available with AD3	V55	
Antenna, Radio – Mast Type, Fender Mounted		X
Belt – Front Seat, for Driver and Outboard Passenger (Extra Length)		X
Clock – Electric		X
Compass – Auto		X
Container – Tissue – Litter, Tunnel Located		X
Dispenser – Tissue, Tunnel Mount		X
Guard – Door Edge, Stainless		X
Guard – Door Edge, (Vinyl with Bright Insert)		X
Harness – Trailer Wiring		X
Heater – Engine (Block Type)		X
Hitch – Trailer (Class 1, 2000 lb.) Bumper Attached		X
Lamp – Luggage Compartment		X
Lamp – Underhood		X
Lamp – Glove Compartment		X
Lamp – Portable Spot		X
Luggage Cover		X
Mat, Floor – Color-Keyed, 2 Front and 2 Rear		X
Mirror – O/S Rear View RH Convex Glass (Matches Standard LH Mirror)		X
Mirror – O/S Rear View LH Remote		X
Mirror – Visor Vanity, Adhesive		X
Mirror – Visor Vanity, Lighted		X
Molding – Body Side (Vinyl with Bright Insert – in Rolls)		X
Radio Receiver (AM/FM Stereo, Pushbutton)		X
Radio Receiver – AM/FM Pushbutton		X
Safety Carrier – Infant (GMPD Item)		X
Speaker – Auxiliary, Rear Seat		X
Speed and Cruise Control		X
Warmer Unit – Battery		X
Warmer Unit – Car Interior		X
Wheel Trim Covers – Full		X
Release, Rear Deck Lid – Electric		X
Roof Rack		X
Bike Rack – Used with Roof Rack		X
Ski Rack – Used with Roof Rack		X
Radio – AM Delete (Antenna & Suppression Retained)	UL5	

RPO B18 AND B57

CUSTOM INTERIOR OPTION (B18)

MODEL AVAILABILITY
Models 1XX00

EQUIPMENT (Used in addition to or in place of standard equipment)

INTERIOR
Choice of Six Trim Colors
Deluxe Level Seat Trim
Deluxe Door Trim with Soft Cloth Upper Insert, Carpet Lower Area, Bright Bead on Handle Escutcheon.
Foam Headliner 12.7 mm Replaces 1.8 mm Material
Full Covers, Color-Keyed, on Seat Adjusters
Rear Seat Ash Trays
Deluxe Steering Wheel (N31)
Tilt Type Inside Mirror (D31)
Quiet Sound Group (BS1) Acoustics Package for 1XX11 Model
Quiet Sound Group/Rear Compartment Decor (BS2) Acoustics and Color-Keyed Load Area Plastic Trim for 1XX08-68 Models

DELUXE EXTERIOR OPTION (B57)

MODEL AVAILABILITY
Models 1XX00

EQUIPMENT (Used in addition to or in place of standard equipment)

EXTERIOR
Side Window Bright Reveal Moldings (B90)
Deluxe Taillamps with Amber Turn Signal Areas, Replaces Standard All Red Units
Wheel Trim Covers (P01)
Accent Stripe, Body Side Upper (D85)

"X11" SPORT EQUIPMENT OPTION (B4X)

MODEL AVAILABILITY
Models 1XX08, 1XX11

EQUIPMENT (Used in addition to or in place of standard equipment)

EXTERIOR FEATURES AND ORNAMENTATION

Stripe Decals (D88). Includes Model Name on Body Side.
Stripe Colors: Black, Silver, Red, Gold.
Model Name Decals on Hood, Rear Spoiler.
Bright Grille with Black Paint Accent (TL6).
Bright Headlamp Bezels with Black Paint Accent.
Black Paint Accent on Rocker Panel Mouldings (B83).
Black Paint Accent on Taillamps (T93).
Black Paint on Rear License Pocket.
"B" Pillar Louvers, Painted Black (BW7).
Rear Quarter Louvers, Stripe Color with Black "Blades" (B95).
Dual Sport Mirrors – Body Color (D35).
Rear Spoiler (D80) with Stripe Treatment.
Deluxe Wheel Trim Ring and Hub Cap (P03).
Bright Metal Side Window Moldings (B90).
Body Belt Line Accent Stripe (D85).
Bumper Rub Strips, Front and Rear Black (VE5).
Rear "Chevrolet" Nameplate Moved to Spoiler, Centered Over LH Taillamp.

INTERIOR FEATURES

Sport Steering Wheel (NK3) Soft Rim Interim.

CHASSIS

Sport Suspension (F41).
P205/80R13 Steel Belted Radial Tires – White Letter (QDT).

FOUR SEASON (RPO C60)

Integral air cooling and heater system, manually controlled by two vertical levers on instrument control panel, plus 4-speed fan switch. The left vertical lever operates compressor and air selector doors, the right vertical lever controls air temperature from instrument panel and side outlets.

BASIC COMPONENTS

Control panel, evaporator, blower, condenser, receiver-dehydrator, refrigerant (freon) tank, air intake assembly and duct assembly for both systems.

EQUIPMENT (Used in addition to or in place of base equipment)

CHASSIS

Axle Ratio – Refer to Power Train Section.

POWER TRAINS

Fan	Electric, shrouded, 7-blade with integral rotating reinforcement ring, nylon composition.
Crankshaft Pulley	Single: two groove pulley, with L-4 engine. / three groove pulley, with V-6 engine.
Compressor & Crankshaft Belt	One
Generator	70 Ampere (RPO K73)
Radiator	Heavy Duty

DIMENSIONS AND WEIGHTS

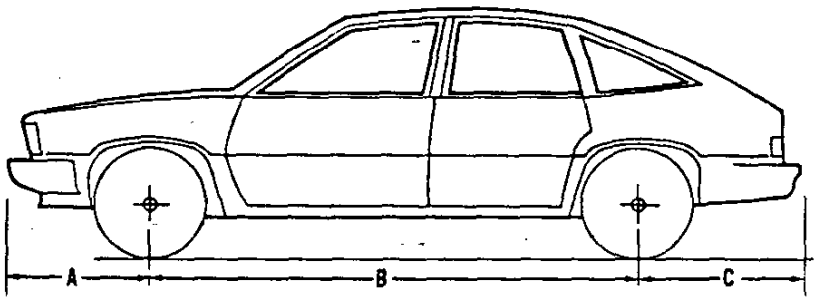

INTERIOR DIMENSIONS 2

EXTERIOR DIMENSIONS 3, 4

LUGGAGE CAPACITY 5

HATCHBACK COUPES AND SEDAN CARGO SPACE 5

VEHICLE WEIGHTS 6

OPTIONAL EQUIPMENT WEIGHTS 6

INTERIOR DIMENSIONS

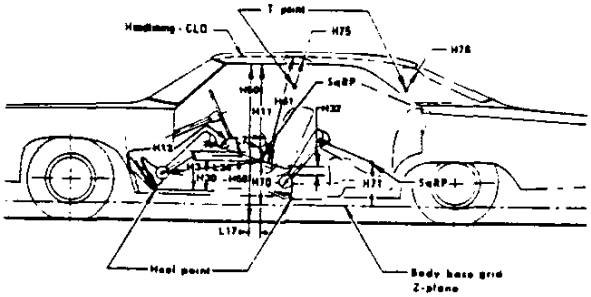

FRONT COMPARTMENT

CODE	DESCRIPTION	COUPES		HATCHBACK COUPE	HATCHBACK SEDAN
		1XH11	1XX11	1XX08	1XX68
H-3	Seat cushion height	317 (12.5)			
H11	Entrance height	766 (30.1)			
H13	Steering wheel thigh clearance	93 (3.7)			
H30	SgRP to heel point (chair height)	257 (10.1)			
H32	Seat cushion deflection	94 (3.7)			
H50	Upper body opening to ground	1225 (48.2)			
H58	H point rise	28 (1.1)			
H61	Effective headroom	968 (38.1)			
H70	SgRP to body base grid	252 (9.9)			
H75	Effective "T" point headroom	968 (38.1)			
W3	Shoulder room	1428 (56.2)			1430 (56.3)
W5	Hip room	1400 (55.1)			
L7	Steering wheel torso clearance	358 (14.1)			
L17	H point travel	192.5 (7.6)			192 (7.5)
L34	Effective leg room	1073 (42.2)			

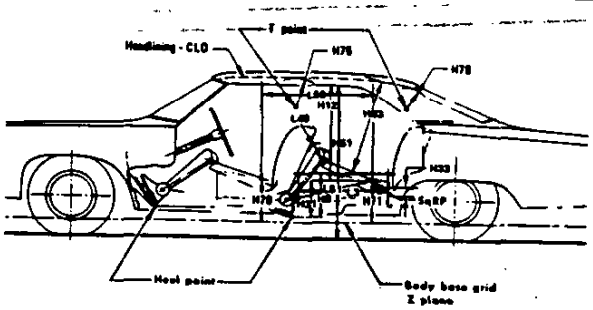

REAR COMPARTMENT

H8	Seat cushion height	321 (12.6)			
H12	Entrance height	--			766 (30.1)
H31	SgRP to heel point (chair height)	261 (10.3)			
H33	Seat cushion deflection	108 (4.2)			
H51	Upper body opening to ground	--			1219 (48.0)
H63	Effective headroom	952 (37.5)		958 (37.7)	957 (37.7)
H71	SgRP to body base grid	249 (9.8)			
H76	Effective "T" point headroom	944 (37.2)		957 (37.7)	956 (37.6)
W4	Shoulder room	1428 (56.2)			1430 (56.3)
W6	Hip room	1374 (54.1)			1397 (55.0)
L3	Rear compartment room	691 (27.2)			
L48	Knee clearance	24 (0.9)			22 (0.9)
L50	SgRP couple distance	786 (30.9)			
L51	Effective leg room	876 (34.5)			902 (35.5)

* Primary Dimensions are millimeters unless otherwise shown.

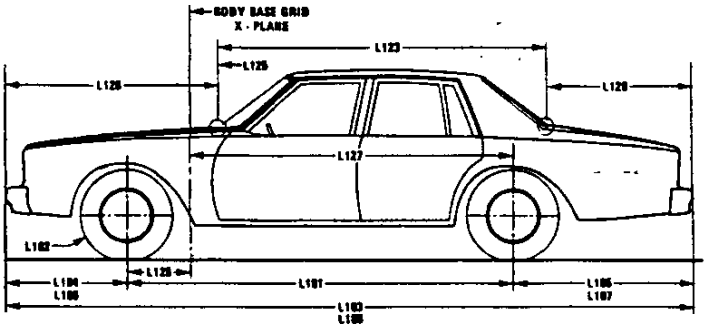

LENGTH

CODE	DESCRIPTION	COUPES		HATCHBACK COUPE	HATCHBACK SEDAN
		1XH11	1XX11	1XX08	1XX68
L101	Wheelbase	2664 (104.9)			
L102	Tire size (standard)	P185/80R13			
L103	Overall length	4488 (176.7)			
L104	Overhang front	897 (35.3)			
L105	Overhang rear	927 (36.5)			
--	Overall length - less bumpers	4301 (169.3)			
L123	Body upper structure length at car centerline	2476 (97.5)		2752 (108.3)	
L125	Body base grid plane to windshield cowl point	215 (8.5)			
L126	Front end length at centerline	1306 (51.4)			
L127	Rear wheel centerline to body base grid line	2459 (96.8)			
L128	Front wheel centerline to body base grid line	205 (8.1)			
L129	Rear end length at centerline	595 (23.4)		319 (12.5)	320 (12.6)
L30	Front of dash to body base grid	16 (0.6)			

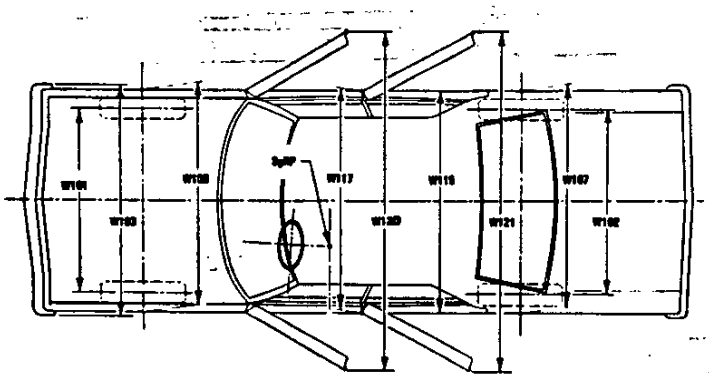

WIDTHS

W101	Tread – front	1492 (58.7)	
W102	Tread - rear	1447 (57.0)	
W103	Maximum overall width of car	1736 (68.3)	
W106	Front fender overall width	1707 (67.2)	
W107	Rear fender overall width	1733 (68.2)	
W116	Maximum overall width of body	1736 (68.3)	
W117	Body width at SgRP - Front	1730 (68.1)	1727 (68.0)
W120	Overall car width, front doors open	3680 (144.9)	3219 (126.7)
W121	Overall car width, rear doors open	--	2857 (112.5)

* Primary dimensions are millimeters unless otherwise shown.

EXTERIOR DIMENSIONS

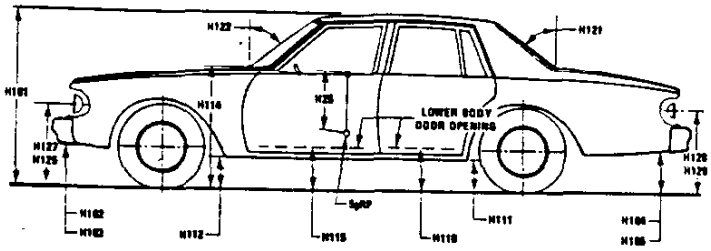

HEIGHTS

CODE	DESCRIPTION	COUPES		HATCHBACK COUPE	HATCHBACK SEDAN
		1XH11	1XX11	1XX08	1XX68
H101	Overall height (design)	1348 (53.1)			
H102	Front bumper to ground	351 (13.8)			
H104	Rear bumper to ground	297 (11.7)			
H111	Rocker panel to ground - rear	192 (7.6)			
H112	Rocker panel to ground - front	204 (8.0)			
H114	Hood at rear to ground	900 (35.4)			
H115	Step height – front (design)	335 (13.2)			
H116	Step height - rear (design)	--			327 (12.9)
H125	Headlamp to ground	637 (25.1)			
H126	Taillamp to ground	587 (23.1)			
H136	Body base grid "Z" plate to ground-front	17.00 (0.67) "0"-M.M. Line			
H137	Body base grid "Z" plate to ground-rear	-2.00 (-0.08) "0" M.M. Line			

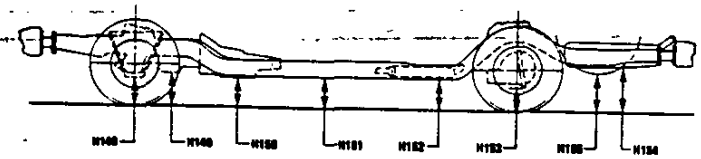

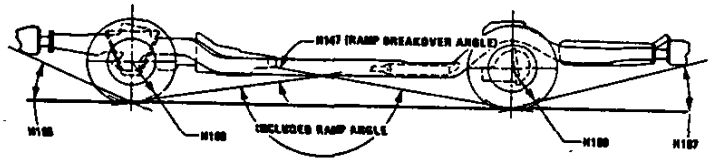

CLEARANCES)

H106	Angle of approach (degrees)	29.12°
H107	Angle of departure (degrees)	18.41°
H147	Ramp breakover angle (degrees)	14.45°
H148	Front suspension to ground	138 (5.4)
H149	Oil pan to ground	174 (6.8)
H150	Flywheel housing to ground	194 (7.6)
H151	Frame to ground	136 (5.3)
H152	Exhaust system to ground	148 (5.8)
H153	Rear axle to ground	--
H154	Fuel tank to ground	173 (6.8)
H155	Tire well to ground	222 (8.7)
H156	Minimum ground clearance	136 (5.3)
--	Location	Frame Between Wheels

* Primary Dimensions are millimeters unless otherwise shown.

LUGGAGE COMPARTMENT

CODE	DESCRIPTION	COUPES		HATCHBACK COUPE	HATCHBACK SEDAN
		1XH11	1XX11	1XX08	1XX68
H195	Liftover height	528 (20.8)			
V1	Usable luggage capacity (cu.ft.)	355 (12.5)		--	--

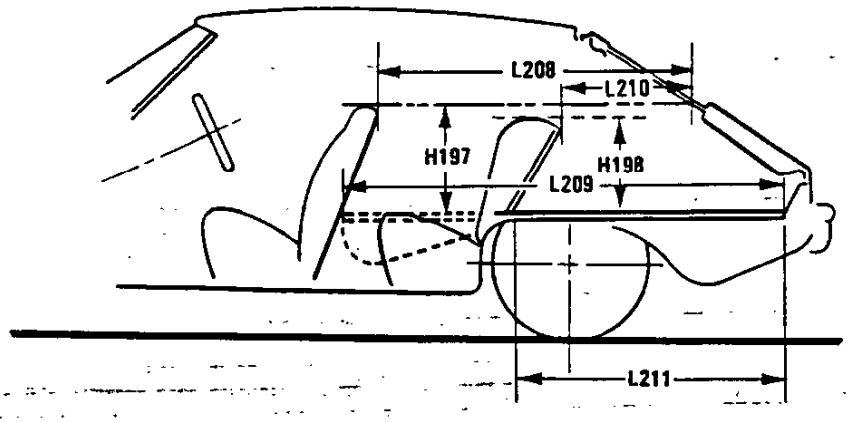

HATCHBACK CARGO SPACE

W4	Shoulder room – rear	1428 (56.2)	1430 (56.3)
H197	Front seat back to load floor height	590 (23.2)	
L208	Cargo length at – front seat back height	1178 (46.4)	
L209	Cargo length at floor - front seat	1606 (63.2)	
V3	Total hatchback – cargo index volume (cu. ft.)	1172 (41.4)	1174 (41.5)

EPA TYPE VOLUMES

–	Hatchback – cargo index vol. (a)	–	556 (19.6)	557 (19.7)
–	Interior volume index - cu. ft.	3027 (106.9)	3234 (114.2)	3276 (115.7)
–	Average volume index - cu. ft.		3180 (112.3)	

(a) Rear seat up.

* Primary Dimensions are millimeters unless otherwise shown.

VEHICLE WEIGHTS

MODEL SYMBOL	VEHICLE TYPE	SHIPPING WEIGHT			CURB WEIGHT		
4-Cyl.	Description	Front	Rear	Total	Front	Rear	Total
1XH11	2-Door Coupe	711.6 (1569)	371.9 (820)	1083.5 (2389)	716.5 (1579)	398.1 (878)	1114.6 (2457)
1XX11	2-Door Club Coupe	713.4 (1573)	372.3 (821)	1085.7 (2394)	718.3 (1583)	398.5 (879)	1116.8 (2462)
1XX08	2-Door Hatchback Coupe	703.2 (1550)	392.2 (865)	1095.4 (2415)	708.1 (1561)	418.4 (922)	1126.5 (2483)
1XX68	4-Door Hatchback Sedan	714.5 (1575)	394.3 (869)	1108.8 (2444)	719.5 (1586)	420.4 (927)	1139.9 (2513)

SHIPPING WEIGHT: Weight of basic vehicle with regular equipment, including grease, oil and (3) gallons of gasoline, and engine coolant to capacity.

CURB WEIGHT: Shipping weight plus gasoline to capacity.

For total shipping, and curb weights of vehicles equipped with the following options, add to, or deduct from, the base vehicle weight (lbs.).

OPTIONAL EQUIPMENT

RPO	OPTION	WITH	WEIGHT Metric (Kg) – English
AD3	Sunroof - Glass		5.2 (11.4)
AT6	Seat-Reclining RH Backrest	Requires Coupe Type Front Seat or Bucket Seat	1.6 (3.6) Cpe.
			4.4 (9.7) Sdn.
AU3	Power Door Lock System	2-Door Models	1.8 (3.9)
		4-Door Models	3.0 (6.6)
A31	Power Windows	2-Door Models	2.0 (4.4)
		4-Door Models	5.4 (11.9)
A70	Windows-Rear Quarter Swing-Out	Includes RH and LH Remote Controls	1.0 (2.2)
BS1	Quiet Sound Group	1XH11 and 1XX11 Models	6.8 (15.0)
BS2		1XX08 Model	3.6 (8.0)
		1XX68 Model	3.2 (7.1)
B4X	Sport Equipment "X11"	1XX08 and 1XX11 Models	13.6 (30.0)
B37	Floor Mats Color Keyed Front & Rear		2.2 (4.8)
B57	Deluxe Exterior	1XX00 Models	2.0 (4.4)
B83	Moldings - Rocker Panel	Standard 1XX00 Models, Opt. 1XH11	1.4 (3.1)
B84	Moldings - Body Side		0.8 (1.76)
B96	Moldings - Wheel Opening	Standard 1XX00 Models, Opt. 1XH11	0.4 (0.88)
C49	Electric Rear Window Defogger	Includes K81 delcotron	0.6 (1.3)
C60	Air Conditioning	L4 Engine	27.0 (59.5)
		V6 Engine	27.6 (60.8)
D55	Console, Front Compartment	1XX00 Models, Requires A51 Bucket Seats	2.6 (5.7)
F41	Special Performance Front & Rear Suspension		1.6 (3.48)
J50	Power Brakes		3.2 (7.0)
LE2	Engine 2.8 Liter V6, 173 CID		17.8 (39.26)
MX1	Automatic Transmission	L4 Engine, RPO LW9	12.8 (28.2)
		V6 Engine, RPO LE2	14.2 (31.3)
N41	Power Steering	with L4 Engine	9.6 (21.14)
		with V6 Engine	9.4 (20.74)
P01	Full Wheel Covers		1.2 (2.6)
P03	Deluxe Wheel Trim Rings & Hub Caps		0.4 (0.88)
P06	Rings, Wheel Trim		0.4 (0.88)
UM2	Radio AN/FM Stereo	With 8-Track Tape	2.8 (6.2)
UN3	Radio AM/FM Stereo	With Cassette Tape	2.8 (6.2)
UP6	Radio AM/FM Stereo	With Citizen's Band	3.0 (6.6)
U92	Dual Front and Rear Speakers	Included in U58, UM2, UM3, UP6	0.2 (0.44)
U58	Radio AM/FM Stereo		0.4 (0.88)
U69	Radio AM/FM		0.4 (0.88)
U80	Rear Seat Speaker	Requires U63 or U69	1.0 (2.2)
VE5	Bumper Rub Strips		1.2 (2.6)
V30	Bumper Guards Front and Rear		1.2 (2.6)
V55	Carrier-Roof	Not Available with AD3	5.4 (11.9)
UA1	Battery, Heavy Duty		4.6 (10.1)

BODY

UNITIZED BODY CONSTRUCTION

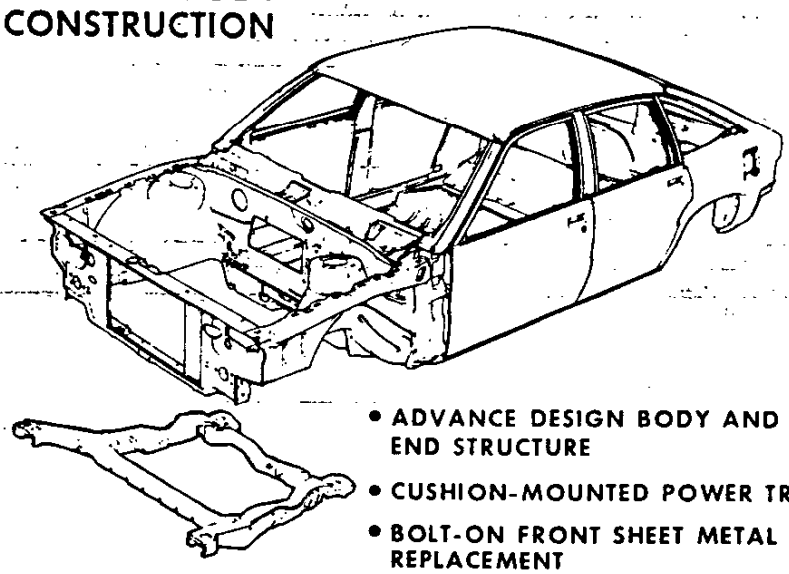

- ADVANCE DESIGN BODY AND INTEGRAL FRONT END STRUCTURE
- CUSHION-MOUNTED POWER TRAIN CRADLE
- BOLT-ON FRONT SHEET METAL FOR EASY REPLACEMENT

EXTERIOR PAINT PROCESS 2

EXTERIOR-INTERIOR COLORS 3-4-5-6-7-8

BODY CONSTRUCTION AND GLASS AREA 9

EXTERIOR PAINT PROCESS

1. RUSTPROOFING. Assembled car bodies are chemically sprayed to clean and prepare the metal surfaces for corrosion resistance and paint adhesion. Unassembled sheet metal parts follow the same process.

2. BODY PRIMERS. Various corrosion resistant primers, specially formulated, are dip applied or hand sprayed on the body in areas where rust might develop.

   At the Willow Run and Oklahoma City Assembly Plants, bodies receive a cathodic elpo primer, a primer-surfacer spray, and a primer-sealer in selected areas.

   At Tarrytown, bodies are sprayed with a primer primer-sealer, underbodies are sprayed with an underbody primer, and a primer-sealer is applied in selected areas. Also, lower areas considered especially vulnerable are coated with another rust inhibiting compound.

3. SHEET METAL PRIMER is applied to all outside and inside surfaces of front fenders and hoods. The parts are mechanically dipped to insure coating in all seams and secluded areas, and baked.

4. VINYL UNDERCOAT AND PRIMER-SURFACER COATS. A vinyl base undercoat is applied to selected lower body panels to help protect against stone chips. Finally, a primer-surfacer coat is sprayed on all outside surfaces of the body and oven baked.

5. INITIAL SANDING. Power wet sanding, followed by hand sanding is done on all body surfaces requiring the final color coat. This insures a smooth surface for the exterior paint. To remove the water, the body is wiped and run through an oven.

6. COLOR COAT. Three coats of acrylic lacquer or acrylic enamel are applied on the exterior surfaces of the body and sheet metal parts to build up a finish of the required thickness for each color.

7. INITIAL BAKING. To harden the paint enough to mask for two tones, the body and sheet metal parts are given a short oven bake.

8. FINAL BAKING. To assure a durable, hard, high luster finish the color coat is baked. Reheating the color coat permits paint film to soften, allowing surface blemishes to disappear during the thermo-reflow process.

9. UNDERCOATING. To block out road noise, a sound deadener with an asphalt base is sprayed inside the wheel housings and on the bottom of the underbody at designated areas.

10. PAINT REPAIR AND PROTECTION. Mars, nicks, or scratches that occur during final assembly are corrected at the factory before shipment. When required, light "slush" polishing brings painted surfaces to a high luster finish.

1980 CITATION "X" CAR EXTERIOR-INTERIOR COLOR COMBINATIONS

		INTERIOR TRIM					
EXTERIOR COLOR	CODE	BLACK	BLUE	GREEN	CAMEL	CARMINE	OYSTER
White C/O	11	X	X	X	X	X	X
Silver Met. C/O	15	X	X			X	X
Dk. Blue Met.	29	X	X		X	X	X
Dk. Claret Met.	76	X			X	X	X
Black C/O	19	X	X	X	X	X	X
Lt. Blue Met.	21	X	X				X
Dk. Green Met.	44	X		X	X		X
Beige	59	X	X	X	X	X	
Gray	85	X	X		X	X	X
Yellow	50	X			X		X
Lt. Camel Met.	63	X			X		
Med. Camel Met.	69	X			X		X
Cinnabar	77	X			X		X
Red	72	X				X	X

CUSTOM TWO-TONE COLORS			INTERIOR TRIM					
			BLACK	BLUE	GREEN	CAMEL	CARMINE	OYSTER
White	Dk. Blue	11/29		X			X	X
White	Gray	11/85	X	X			X	X
Silver	Gray Met.	15/16	X				X	X
Silver	Black	15/19	X				X	X
Lt. Blue	Dk. Blue	21/29		X				
Beige	Green	59/44			X			
Beige	Camel	59/63				X		
Camel	Camel Met.	63/69				X		
Red	Black	72/19	X				X	
Gray	Gray Met.	85/16	X				X	X
Gray	Dk. Blue	85/29		X				X
Gray	Claret	85/76					X	X
Beige	Cinnabar	59/77				X		

1980 CITATION EXTERIOR-INTERIOR COLOR COMBINATIONS

MODEL	Seat Type	INTERIOR TRIM										
		Black		Dark Blue		Willow Green		Camel Tan		Carmine		Oyster
		Vinyl	Cloth	Vinyl	Cloth	Vinyl	Cloth	Vinyl	Cloth	Vinyl	Cloth	Vinyl
1XH11 Standard Interior 2-Dr. Coupe (11)	Bench (A52)	19N			26B	44N		62N	62B	74N		
1XX00 Standard Interior 2-Dr. Club Coupe (11)	Bench (A52)	19N			26B	44N		62N	62B	74N		
2-Dr. Hatchback (08)	Bench (A52)	19N			26B	44N		62N	62B	74N		
4-Dr. Hatchback (68)	Bench (A52)	19N			26B	44N		62N	62B	74N		
1XX00 RPO B18 Deluxe Interior 2-Dr. Club Coupe (11)	Bench (A51)	19V	19D	26V	26D		44D	62V	62D	74V	74D	12V
	Bucket (A51)	19V	19D	26V	26D			62V	62D	74V	74D	12V
2-Dr. Hatchback (08)	Bench (A52)	19V	19D	26V	26D		44D	62V	62D	74V	74D	12V
	Bucket (A51)	19V	19D	26V	26D			62V	62D	74V	74D	12V
4-Dr. Hatchback (68)	Bench (A52)	19V	19D	26V	26D		44D	62V	62D	74V	74D	12V
	Bucket (A51)	19V	19D	26V	26D			62V	62D	74V	74D	12V

CLOTH & VINYL USAGE

N – Rattan vinyl
B – Belaya, 907 WC, sport cloth
V – Derma vinyl, Sierra bolster
D – Lombardy, 347 WC, velour cloth, Lombardy bolster

1980 CITATION
BODY SIDE ACCENT STRIPE RPO D85 (1XA00) AND DECK LID ACCENT STRIPE (1XX00)

14A	Brt. Silver	WMH 4575
19A	Black	WMH 848
26A	Blue	WMH 7187
54A	Gold	WMH 8063
67A	Brown	WMH 8086
73A	Brt. Red	WMH 4330
76A	Dk. Claret Met.	WMH 7112
77A	Cinnabar	WMH 7104

NOTE: Body Side Molding Available in Black Only.

Deck Lid Stripe is to Color Match Body Side Stripe when used together.

Deck Lid Stripe is to be Black when RPO D60 Color Override is specified (Without Body Accent Stripe).

BODY SIDE STRIPING WITHOUT CUSTOM TWO-TONE PAINT

		INTERIOR TRIM					
EXTERIOR PAINT COLOR AND CODE		Black	Blue	Camel	Carmine	Green	Oyster
Beige	59	Gold	Blue	Brown	Red	Gold	–
Black	19	Silver	Blue	Gold	Red	Gold	Silver
Blue, Dark (Metallic)	29	Silver	Blue	Gold	Red	–	Silver
Blue, Light (Metallic)	21	Black	Blue	–	–	–	Silver
Camel, Light (Metallic)	63	Brown	–	Brown	–	–	–
Camel, Medium (Metallic)	69	Gold	–	Gold	–	–	Gold
Cinnabar	77	Black	–	Gold	–	–	Black
Claret, Dark (Metallic)	76	Gold	–	Gold	Gold	–	Silver
Gray	85	Black	Blue	Brown	Red	–	Red
Green, Dark (Metallic)	44	Gold	–	Gold	–	Gold	Gold
Red	72	Black	–	Gold	Gold	–	Silver
Silver	15	Black	Blue	–	Red	–	Red
White	11	Black	Blue	Gold	Red	Gold	Silver
Yellow	50	Black	–	Black	–	–	Black

NOTE: Standard Deck Lid Stripe is same color as Body Side Pin Striping.

1980 CITATION
CUSTOM TWO-TONE, ACCENT STRIPE, AND VINYL ROOF COMBINATIONS

BODY (U & L)		ACCENT (M)		UPPER ACCENT STRIPE		RPO VINYL TOP COLORS* (If Ordered)	
White WA 3967	11	Dk. Blue Met. WA 7103	29	Blue (26A)	WMH 7187	White	11T
White WA 3967	11	Gray WA 7101	85	Red (73A)	WMH 4330	Gray	85T
Silver WA 7022	15	Gray Met. WA 7054	16	Red (73A)	WMH 4330	None Available	
Silver WA 7022	15	Black WA 848	19	Red (73A)	WMH 4330	Black	19T
Lt. Blue Met. WA 7102	21	Dk. Blue Met. WA 7103	29	Brt. Silver (14A)	WMH 4575	Lt. Blue Met.	21T
Beige WA 7084	59	Dk. Green Met. WA 7105	44	Gold (54A)	WMH 8063	None Available	
Beige WA 7084	59	Lt. Camel Met. WA 7136	63	Brown (67A)	WMH 8086	Lt. Camel Met.	63T
Lt. Camel Met. WA 7136	63	Med. Camel Met. WA 7137	69	Brown (67A)	WMH 8086	Lt. Camel Met.	63T
Red WA 4998	72	Black WA 848	19	Gold (54A)	WMH 8063	Black	19T
Gray WA 7101	85	Gray Met. WA 7054	16	Red (73A)	WMH 4330	Gray	85T
Gray WA 7101	85	Dk. Blue Met. WA 7103	29	Blue (26A)	WMH 7187	Gray	85T
Gray WA 7101	85	Dk. Claret Met. WA 7112	76	Dk. Claret (76A)	WMH 7112	Dk. Claret Met.	76T
Beige WA 7084	59	Cinnabar WA7104	77	Cinnabar (77A)	WMH 7104	None Available	

NOTES: NO COLOR OVERRIDES ALLOWED.

EXCEPT STRIPE COLOR WILL BE GOLD WHEN CAMEL INTERIOR IS SPECIFIED, AND BLUE WHEN BLUE INTERIOR IS SPECIFIED.

BODY SIDE MOLDING AVAILABLE IN BLACK ONLY.

* Models 1XH11, 1XX11 only.

1980 CITATION "X11" SPORT PACKAGE (RPO B4X)
NO COLOR OVERRIDES ARE ALLOWED

EXTERIOR		INTERIOR TRIM					
		BLACK	DARK BLUE	WILLOW GREEN	CAMEL TAN	CARMINE	OYSTER
		STRIPE PACKAGE COLOR SCHEME					
White	11	Black	–	Black	Gold	Red	Red
Silver Met.	15	Black	–	–	–	Red	Black
Black	19	Gold	Silver	–	Gold	Red	Silver
Dk. Blue Met.	29	–	Silver	–	Gold	–	Silver
Dk. Green Met.	44	–	–	Gold	Gold	–	Silver
Yellow	50	Black	–	–	Black	–	Black
Lt. Camel Met.	63	Black	–	–	Black	–	–
Red	72	Silver	–	–	Gold	Silver	Silver
Dk. Claret Met.	76	Silver	–	–	Gold	Gold	Silver
Cinnabar	77	Black	–	–	Black	–	Black

STRIPE PACKAGE	LOWER BODY STRIPE		UPPER ACCENT STRIPE	
15A Silver	Black /Silver	WMH 848 WMH 7022	Silver	WMH 7022
18A Black	Gold /Black	WMH 8063 WMH 848	Black	WMH 848
63A Gold	Black /Med. Gold	WMH 848 WMH 7136	Med. Gold	WMH 7136
72A Red	Brt. Silver /Med. Red	WMH 4575 WMH 4998	Med. Red	WMH 4998

1980 CITATION CAR EXTERIOR COLOR VINYL ROOF COMBINATIONS
MODELS 1XH11 AND 1XX11 ONLY

			VINYL ROOF COLOR						
			11T C/O	19T C/O	21T	44T	63T	76T	85T
EXTERIOR COLOR	CODE	FISHER W.A.	WHITE	BLACK	LT. BLUE	DK. GREEN	LT. CAMEL	DK. CLARET	GRAY
White C/O	11	3967	X	X	X	X	X	X	X
Silver Met. C/O	15	7022	X	X				X	X
Dk. Claret Met.	76	7112	X	X			X	X	
Dk. Blue Met.	29	7103	X	X	X		X		X
Black C/O	19	848	X	X	X		X	X	X
Lt. Blue Met.	21	7102	X	X	X				
Beige	59	7084		X			X	X	
Dk. Green Met.	44	7105	X	X		X			
Gray	85	7101	X	X				X	X
Yellow	50	7100	X	X					X
Red	72	4998	X	X				X	X
Med. Camel Met.	69	7137	X	X			X		
Cinnabar	77	7104	X	X					

SPECIAL ACCENT COLORS		
Gray Metallic	16	7054

CUSTOM TWO-TONE COLORS	CODE
White/Dk. Blue	11/29
White/Gray	11/85
Silver/Gray Met.	15/16
Silver/Black	15/19
Lt. Blue/Dk. Blue	21/29
Beige/Dk. Green	59/44
Beige/Lt. Camel	59/63
Lt. Camel/Med. Camel	63/69
Red/Black	72/19
Gray/Gray Met.	85/16
Gray/Dk. Blue	85/29
Gray/Dk. Claret	85/76
Beige/Cinnabar	59/77

VINYL ROOF COLOR						
11T C/O	19T C/O	21T	44T	63T	76T	85T
WHITE	BLACK	LT. BLUE	DK. GREEN	LT. CAMEL	DK. CLARET	GRAY
X						
						X
X						
		X				
				X		
				X		
X						
						X
						X
					X	

GENERAL

Construction . . . . . Unitized body construction coupled with a cushion-mounted bolt-on power train cradle to more effectively isolate the body from the power train and suspension.

- All-welded heavy-gauge steel unitized body construction with cowl, roof, underbody and body panels precision welded to form rigid body shell.
- Bolt-on front sheet metal for easy replacement.
- Rugged box-section-design roof rails, windshield and rear window headers, door and roof pillars.
- Heavy-gage steel roof panel with double-flanged channel-crossed reinforcing bows.
- High-strength double-walled cowl unit-welded to instrument panel, floor and dash panel.
- Heavily ribbed and formed underbody with transverse stiffeners welded to underbody and body sills.

DOORS

Type . . . . . Double-panel construction hinged at front. Side guard beams standard spring loaded hold-open feature with two position detent. Welded-on strap type hinges.

HANDLES

Type . . . . . Exterior, flush lift bars. Interior, sliding interior door lock buttons for better theft deterrence.

HOOD, REAR DECK LID AND HATCHBACK DOOR

Hood Type . . . . . Double panel construction rear hinged.

Hood Release . . . . . Internal, lever located under instrument panel, left of steering column.

Hatchback door, hydropneumatic counterbalance, hinged rear compartment panel on hatchbacks for added luggage area security. Panel linked to hatch raises automatically when hatch is opened; may be easily removed when additional load height is required.

HEATER AND VENTILATION SYSTEM

Type . . . . . Upper power ventilation is base equipment. Vent air flow capacity is 270 liters per second maximum.

The new system is designed to allow the use of two modes in combination for greater flexibility. For example, placing the selector lever between "VENT" and "HEAT" directs cool air out of the upper outlets and heated air through the lower ducts, giving bi-level temperature control previously available only with air conditioning.

SEATS . . . . . Front bench seat is standard, with polyfoam padding and integral head restraints for all models, bucket seats optional.

A folding rear seat is base equipment for hatchback models, a hinged package shelf behind the rear seat, linked to hatch, conceals articles on the load floor and provides acoustical qualities.

WINDSHIELD WIPERS AND WASHERS

Type . . . . . Dual 2-speed electric with 18" blades

Linkage . . . . . Parallel acting

Washer System . . . . . Electric, dual spray

HEADLIGHTS

Type . . . . . Single rectangular lamps

SPARE TIRE MOUNT

Location . . . . . Under floor of luggage compartment

Tools . . . . . Bumper jack with combination lever handle and wheel nut wrench

BODY GLASS DLO AREA SQ. CM. (SQ. IN.)

MODELS		WINDSHIELD	FRONT DOOR	REAR DOOR	REAR QUARTER	BACK WINDOW	TOTAL
'11	Base	8362 (1296.1)	7297 (1131.0)	—	3829 (593.5)	6699 (1038.3)	26187 (4059.1)
	Swingout				3998 (619.7)		26356 (4085.2)
'68	Base	8362 (1296.1)	5589 (866.3)	5179 (802.7)	2095 (324.7)	7216 (1118.5)	28441 (4408.3)
	Swingout				1918 (297.3)		28264 (4380.9)
'08	Base	8362 (1296.1)	7297 (1131.0)	—	5638 (873.9)	7216 (1118.5)	28513 (4419.5)
	Swingout				5078 (787.1)		27953 (4332.7)

All glass curved safety solid plate except curved laminated plate windshield.

CHASSIS

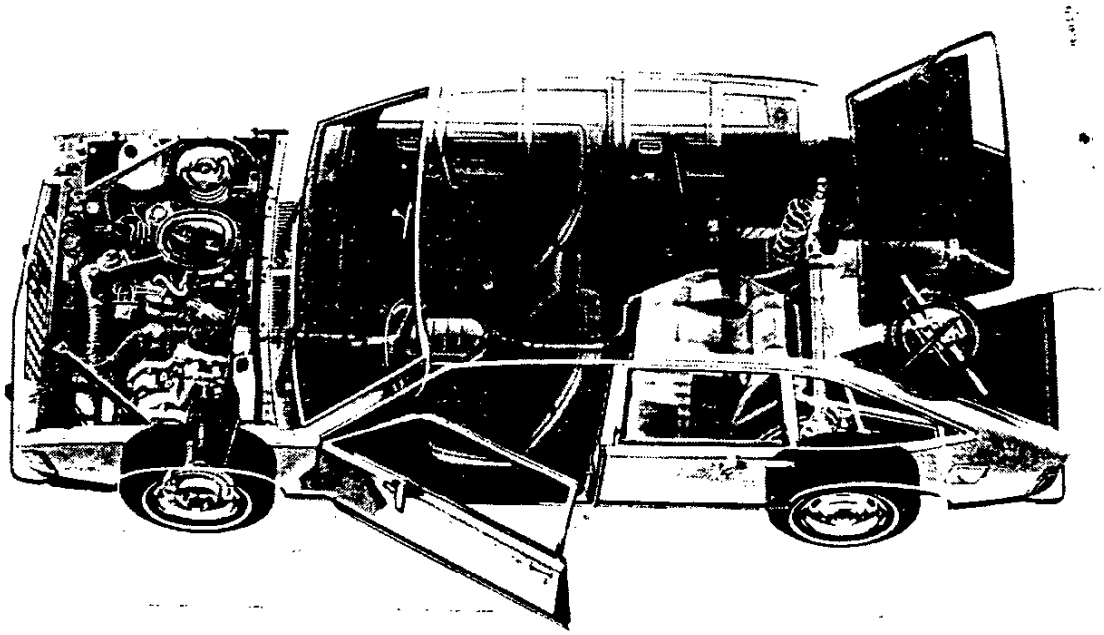

FRAME AND FRONT SUSPENSION 2-3-4

REAR SUSPENSION 5

STEERING, TIRES, AND WHEELS 6

BRAKES 7

BULBS AND LAMPS 8

FUSES AND CIRCUIT BREAKERS 9

FRAME AND FRONT SUSPENSION

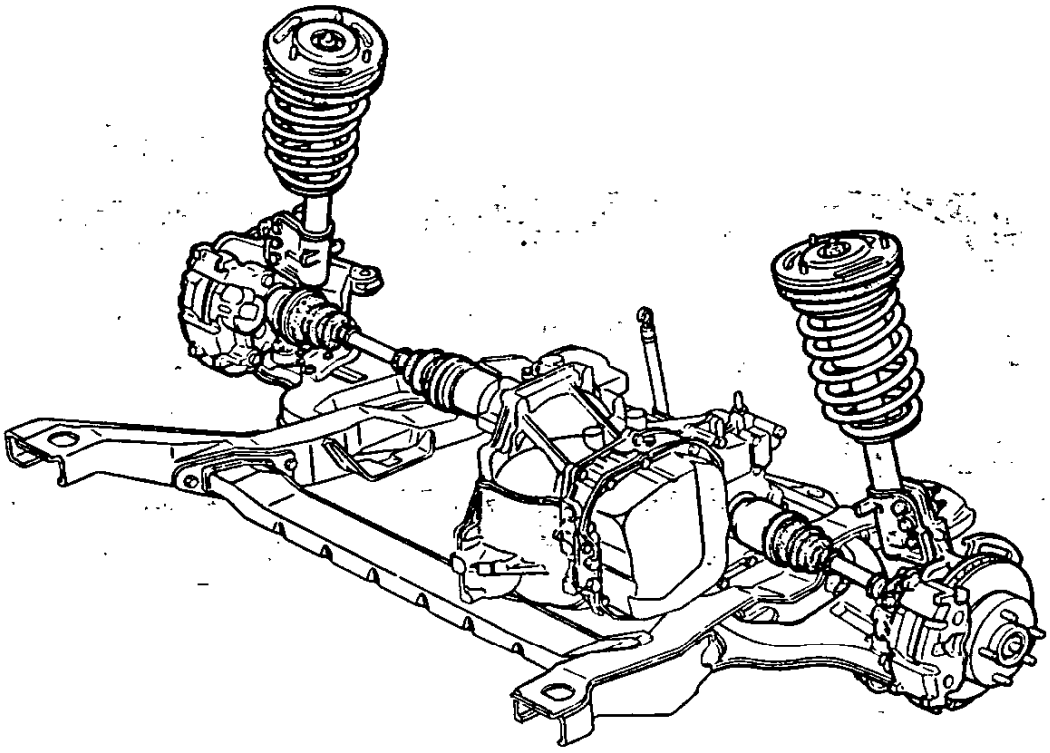

FRAME
Type . . . . . Bolt-on power train cradle (2-piece design) with mounting provisions for suspension lower control arms and engine mounts.

FRONT SUSPENSION
Type . . . . . MacPherson strut type cast nodular iron steering knuckles with stamped lower control arms.
Wheel Travel (design) – mm (in.)
Total 182 (7.16)
Jounce 88 (3.46)
Rebound 94 (3.70)
Wheel to spring travel ratio 1.05:1

CONTROL ARMS
Type . . . . . Stamped. Mounted on power train cradle.

STEERING KNUCKLES
Type . . . . . Cast nodular iron with integral brake caliper mounting pads and integral steering knuckle arms.
Spindle Diameters – mm (in.)
Inner and outer bearings 28.95 (1.1398)
Thread size . . . . . M20 x 1.5
Wheel Bearings
Type . . . . . Ball, sealed bolt-in hub units - lubricated permanently.

AXLE DRIVE UNIT
Description . . . . . Transaxle front differential with helical gear. Two-piece aluminum housing. Tapered roller bearings.
Lubricant . . . . . Dexron II

AXLE SHAFTS
Description . . . . . Solid section drive shafts to front wheels with universal joints
Number . . . . . Two
Type . . . . . Solid
Diameter – mm (in.) 23.81 (0.9375)
Length – mm (in.)
Left 320.8 (12.63)
Right
4-Speed Man. Trans. 729.4 (28.72)
3-Speed Auto. Trans. 421.8 (16.61)
Universal Joints
Type . . . . . Constant velocity
Number Used 4
Inboard . . . . . Double offset design
Outboard . . . . . Rzeppa
Bearings . . . . . Prepacked

RING AND PINION GEAR COMBINATIONS
(Manual Trans.)
Axle Ratio 3.32:1
Ring Gear Diameter – mm (in.) 198.9 (7.83)
Number of Pinion Teeth 25
Number of Ring Gear Teeth 83

AXLE RATIO COMBINATIONS (Automatic Trans.)

Axle Ratio	2.53	2.84
Transfer Gear Ratio	0.89	1.0
Drive Sprocket	37	35
Driven Sprocket	33	35
Final Drive Ratio	2.84	2.84

SHOCK ABSORBERS
Type . . . . . MacPherson strut, direct
Piston Dia. – mm (in.) 32 (1.26)

FRONT WHEEL ALIGNMENT (design)
Caster (degrees) . . . . . 0 ± 2
Camber (degrees) . . . . . +30' ± 30'
Toe-in (degrees) . . . . . .10 ± .10
Steering Axis Inclination (degrees) 14.5

STABILIZER BAR
Type . . . . . Link
Material . . . . . Steel
Diameter – mm (in.) . . . . . 22 (.866)
Bushing Material . . . . . Rubber

GENERAL SUSPENSION PROVISIONS
Drive Taken Through . . . . . Wish-bone lower control arm; upper Mac Pherson strut
Torque Taken Through . . . Engine mounting system

FRONT SPRINGS

Selected from a family of coil springs by Electronic Data Processing which identifies the correct springs for the weight of the vehicles including optional equipment ordered by the customer.

Part No.	Assy. Code	Cut-Off Length		Wire Dia.		Total Coils	Deflection Rate		HEIGHTS			
									Free		Working	
		mm	in.	mm	in.		N/mm	lbs./in.	mm	in.	mm @ N	in. @ lbs.
14003306	BAH	3266	128.6	13.1	.516	6.19	11.0	63	532.7	21.0	260 @ 3000	10.24 @ 674
14003307	BAJ	3338	131.4	13.2	.520	6.31	11.0	63	544.1	21.4	260 @ 3125	10.24 @ 702
14003308	BAK	3412	134.3	13.3	.524	6.44	11.0	63	555.5	21.9	260 @ 3250	10.24 @ 731
14003309	BAM	3562	140.2	13.5	.532	6.70	11.0	63	566.8	22.3	260 @ 3375	10.24 @ 759
14003310	BAN	3641	143.3	13.6	.535	6.83	11.0	63	578.2	22.8	260 @ 3500	10.24 @ 787
14003311	BAR	3721	146.5	13.7	.539	6.97	11.0	63	589.5	23.2	260 @ 3625	10.24 @ 815
14003322	BBD	3211	126.4	13.6	.535	6.08	13.0	74	511.9	20.1	260 @ 3275	10.24 @ 736
14003323	BBF	3280	129.1	13.7	.539	6.19	13.0	74	523.5	20.6	260 @ 3425	10.24 @ 770
14003324	BBH	3418	134.6	13.9	.547	6.43	13.0	74	535.0	21.1	260 @ 3575	10.24 @ 804
14003325	BBJ	3490	137.4	14.0	.551	6.56	13.0	74	546.5	21.5	260 @ 3725	10.24 @ 837
14003370	BDK	3637	143.2	14.2	.559	6.81	13.0	74	558.1	22.0	260 @ 3875	10.24 @ 871
14003371	BDM	3713	146.2	14.3	.563	6.94	13.0	74	569.6	22.4	260 @ 4025	10.24 @ 905

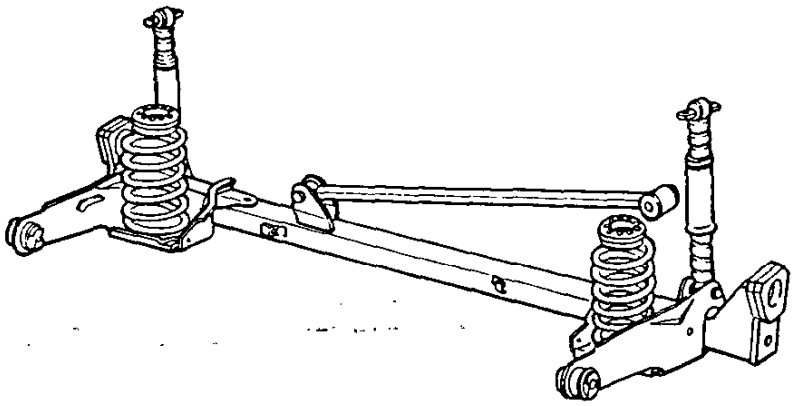

REAR SUSPENSION

Description . . . . . Trailing arm with stamped control arms and open section transverse beam with integral stabilizer bar. Coil springs and track bar.

Wheel Travel — mm (in.)

Total 200 (7.87)

Jounce 92 (3.62)

Rebound 108 (4.25)

Wheel to spring travel ratio 1.39:1

SHOCK ABSORBERS

Type . . . . . Direct, double acting, hydraulic

Piston Diameter - mm (in.) 25 (1.0)

STABILIZER BAR

Type . . . . . Integral part of U-shape transverse beam

Material . . . . . Seamless steel tubing

Diameter – mm (in.) 20 (0.79)

TRACK BAR

Type . . . . . Transverse beam design

Diameter – mm (in.) 30 (1.18)

WHEEL BEARINGS

Type . . . . . Ball, in sealed bolt-in hub units, permanently lubricated

REAR SPRINGS

Selected from a family of springs by Electronic Data Processing which identifies the correct springs for the weight of the vehicle including optional equipment ordered by the customer.

Part No.	Assy. Code	Cut-Off Length		Wire Dia.		Total Coils	Deflection Rate		HEIGHTS			
									Free		Working	
		mm	in.	mm	in.		N/mm	lbs./in.	mm	in.	mm @ N	in. @ lbs.
10004088	NJA	2305	90.7	11.8	.465	6.34	22	125.6	349	13.7	254 @ 2100	10 @ 472
10004089	NJB	2425	95.5	12.0	.472	6.65	22	125.6	357	14.0	254 @ 2260	10 @ 508
10004090	NJC	2550	100.4	12.2	.480	6.97	22	125.6	364	14.3	254 @ 2420	10 @ 544
10004091	NJD	2550	100.4	12.2	.480	6.97	22	125.6	371	14.6	254 @ 2580	10 @ 580
10004092	NJF	2682	105.6	12.4	.488	7.31	22	125.6	379	14.9	254 @ 2740	10 @ 616
10004093	NJG	2820	111.0	12.6	.496	7.66	22	125.6	386	15.2	254 @ 2900	10 @ 652
10004094	NJH	2820	111.0	12.6	.496	7.66	22	125.6	392	15.4	254 @ 3060	10 @ 688
10004095	NJJ	2799	110.2	13.0	.512	7.58	25	142.7	393	15.5	254 @ 3220	10 @ 724

STEERING, WHEELS AND TIRES

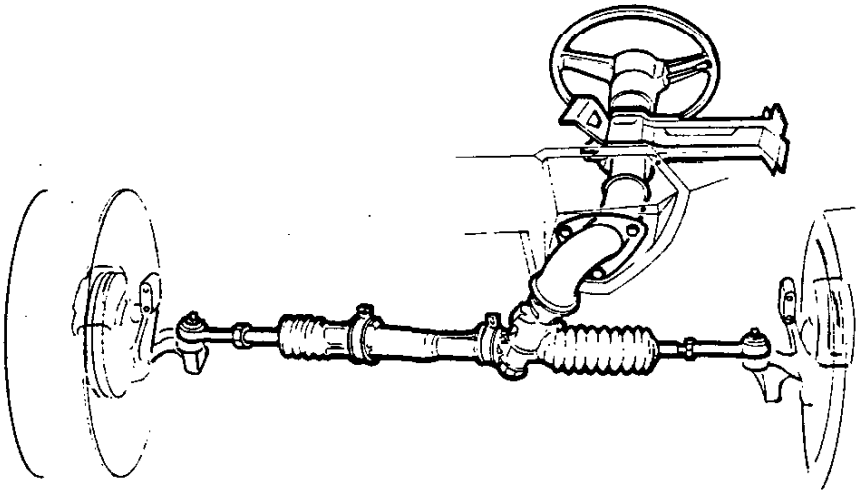

STEERING
- Wheel
  - Type . . . . . Round with angled shroud
  - Diameter – mm (in.) 381 (15.0)
- Column . . . . . Energy absorbing
- Gear-Type
  - Manual-Std. . . . . Rack and pinion
  - Power-Opt. . . . . Rack and pinion with integral power unit
- Ratios, Overall
  - Manual 26.0:1
  - Power 17.5:1
- Number of Wheel Turns, Lock to Lock
  - Manual 3.5
  - Power 3.13
- Linkage . . . . . End take-off tie rods to rear of front wheels
- Turning Diameter – m (ft.)
  - Outside front, wall to wall 12.5 (41.0)
  - Outside front, curb to curb 11.7 (38.4)

WHEELS
- Type . . . . . Ventilated semi-styled disc
- Rim Size . . . . . 13 x 5.5
- Offset – mm 42
- Attachment to Hub . . . . . 5 hex nuts
- Thread Size . . . . . M12 x 1.5
- Bolt Circle Diameter – mm 100

TIRES, STANDARD EQUIPMENT
- Size P185/80R13
- Type . . . . . Glass belted radial
- Sidewall
  - Standard . . . . . Blackwall
  - Optional . . . . . White stripe
- Static Loaded Radius
  - Millimeters 280.7
  - Inches 11.05
- Loaded Revs/km @ 72 km/h 526
- Loaded rev/mile @ 45 mph 846
- Load Capacity @ 180 kPa . . . . . 510 kg
- Load Capacity @ 26 psi . . . . . 1124 lb.

TIRES, OPTIONAL EQUIPMENT
- Type . . . . . Steel belted radial
- Size . . . . . P185/80R13 and P205/70R13
- Sidewall
  - P185/80R13 . . . . . Blackwall and white stripe
  - P205/70R13 . . . . . White letter and white stripe
- Static Loaded Radius - mm (in.)
  - P185/80R13 . . . . . 280.4 (11.04)
  - P205/70R13 . . . . . 278.1 (10.95)
- Loaded Rev/km – 72 km/h (rev/mi. @ 45 mph)
  - P185/80R13 . . . . . 526 (846)
  - P205/70R13 . . . . . 533 (858)
- Load Capacity @ 180 kPa (26 psi) – kg (lb.)
  - P185/80R13 . . . . . 510 (1124)
  - P205/70R13 . . . . . 505 (1113)

TIRE, SPARE
- Type . . . . . Compact
- Size T125/70D14
- Stowage Location . . . . . Under rear load floor with fiberboard cover

WHEEL, SPARE TIRE
- Size . . . . . 14 x 4

GENERAL	Application	Manual	Standard
		Power	Optional, required with V-6 engine and air conditioning
	Type		Disc front drum rear
	System		Dual circuit hydraulic system with warning light and self-adjusting features – proportioning valve standard. Diagonal split hydraulic circuit.
FRONT BRAKES	Type		Disc-single piston sliding caliper
	Material		Cast iron, vented
	Diameter and Width – mm (in.)		247 x 22 (9.72 x 0.87)
	Lining Material		Semi-metallic
	Method of Attachment		Riveted – 6
	Lining Size (length x width x thickness)	Inboard – mm (in.)	125 x 59 x 10.85 (4.92 x 2.32 x .430)
		Outboard – mm (in.)	125 x 59 x 10.85 (4.92 x 2.32 x .430)
	Lining Area – cm^2 ($in.^2$)		217.6 (33.74)
	Effective Area – cm^2 ($in.^2$)		
	Swept Area – cm^2 ($in.^2$)		1121.4 (173.86)
	Piston Dia. – mm (in.)		74.6 (2.937)
REAR BRAKES	Type		Drum – composite web cast into rim
	Material		Cast iron, conventional
	Diameter and Width – mm (in.)		200 x 45 (7.87 x 1.77)
	Lining Material		Organic
	Method of Attachment		Riveted – 8
	Lining Size (length x width x thickness)	Primary	167.7 x 43.9 x 3.8 (6.60 x 1.73 x 0.15)
		Secondary	203.3 x 43.9 x 4.8 (8.0 x 1.73 x 0.19)
	Lining Area – cm^2 ($in.^2$)		313.0 (48.53)
	Effective Area – cm^2 ($in.^2$)		
	Swept Area – cm^2 ($in.^2$)		565.8 (87.72)
	Piston Dia. – mm (in.)		17 (0.67)
APPLY SYSTEM	Master Cylinder Diameter – mm (in.)		22 (0.87)
	Piston Travel – mm (in.)		35.5 (1.40)
	Pedal Travel – mm (in.)		L-4 engine – 234.0 (9.21); V-6 – 137.0 (5.39)
	Line Pressure @ 100 Lb. Pedal Load		
PARKING BRAKE	Type		Mechanical pull rods and cables operate rear service brakes. 'ON' warning lamp provided
	Control		Pendulum foot pedal; released by 'T' handle located on instrument panel to left of steering column.

BULBS AND LAMPS

BULBS AND LAMPS		NUMBER REQUIRED AND TRADE NUMBER	CANDLE POWER PER LAMP
Ash tray		1-1445	0.7
Backing		2-1156	32
Directional Signal Indicator		2-194	2
Dome		1-561	12
Front Fender Marker		2-194	2
Front Seat Courtesy		2-906	6
Headlamp		2-6052	65 High beam
			55 Low beam
Headlamp Hi-Beam Indicator		1-194	2
Heater or A/C Control		1-168	3
Instrument Panel Cluster	Base	1-194	2
		4-168	3
	RPO U21	2-161	1
		2-194	2
		4-168	3
	RPO U22	3-161	1
		2-194	2
		2-168	3
Instrument Panel Compartment		1-194	2
License Plate		2-194	2
Luggage Compartment		1-1003	15
Oil/Choke Indicator		1-194	2
Parking Brake Alarm		1-194	2
Parking & Directional Signal		2-1157 NA	24-2.2
Radio Dial Light–RPO U63 & U69		1-1893	2
Radio Dial & Indicator Light		1-1893 (Dial)	2
– RPO U58, UM1, UM2		1-DS410 (Ind.)	Led (a)
Rear Quarter Side Marker		2-194	2
Seat Belt Warning Indicator		1-194	2
Tail, Stop & Directional		2-1157	
Tail			3
Stop & Directional			32
Temperature Indicator		1-194	2
Underhood		1-93	15
Volts Indicator		1-194	2
W/S Washer & Light Switch Indicator		1-194	2

(a) Light emitting diode.

CIRCUIT	TYPE OF PROTECTION	LOCATION AND CIRCUIT
Air Conditioner	25 amp fuse	Fuse panel
Backing lamps	20 amp fuse	Fuse panel (f)
Brake alarm lamps	20 amp fuse	Fuse panel
Cigarette lighter	20 amp fuse	Fuse panel (g)
Clock	20 amp fuse	Fuse panel (g)
Cooling fan engine	20 amp fuse	Fuse panel
Courtesy lamps	20 amp fuse	Fuse panel
Cruise control, speed	10 amp fuse	Fuse panel
Dome lamp	20 amp fuse	Fuse panel (g)
Door locks, power	30 amp CB	Fuse panel
Electric rear defogger	30 amp CB	Fuse panel
Fender marker lamps	20 amp fuse	Fuse panel (c)
Fuel gauge	20 amp fuse	Fuse panel (b)
Generator warning lamp	20 amp fuse	Fuse panel (b)
Glove compartment lamp	20 amp fuse	Fuse panel (g)
Hazard lamps	20 amp fuse	Fuse panel (a)
Headlamps	Circuit breaker	Headlamp switch
Headlamp indicator	4 amp fuse	Fuse panel (e)
Headlamp buzzer	20 amp fuse	Fuse panel (b)
Heater	25 amp fuse	Fuse panel
Heater dial lamp	20 amp fuse	Fuse panel (b)
Idle stop solenoid	20 amp fuse	Fuse panel (b)
Instrument cluster lamps	4 amp fuse	Fuse panel (e)
Key warning buzzer	20 amp fuse	Fuse panel
License plate lamp	20 amp fuse	Fuse panel (c)
Luggage compartment lamp	20 amp fuse	Fuse panel (g)
Oil pressure warning lamp	20 amp fuse	Fuse panel (b)
Parking lamps	20 amp fuse	Fuse panel (c)
Power window motor	30 amp CB	Fuse panel
Pulse wiper system	25 amp fuse	Fuse panel
Radio	10 amp fuse	Fuse panel (d)
Radio dial indicator lamp	4 amp fuse	Fuse panel (e)
Rear window defogger	30 amp CB	Fuse panel
Seat belt warning buzzer	20 amp fuse	Fuse panel (b)
Seat belt warning light	20 amp fuse	Fuse panel (b)
Stop lamps	20 amp fuse	Fuse panel (a)
Tail lamps	20 amp fuse	Fuse panel (c)
Temperature gauge	20 amp fuse	Fuse panel (b)
Temperature warning lamp	20 amp fuse	Fuse panel (b)
Turning signals	20 amp fuse	Fuse panel (f)
Underhood lamp	20 amp fuse	Fuse panel (g)
W/S wiper and washer	25 amp fuse	Fuse panel

POWER TRAINS

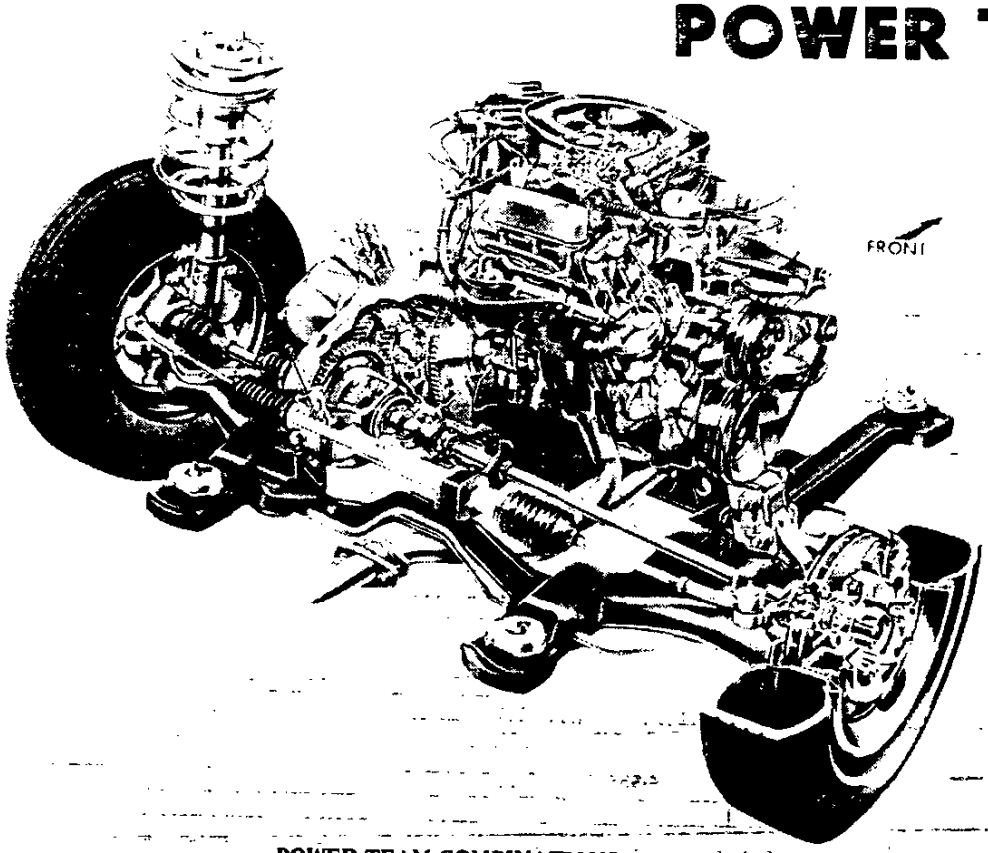

POWER TEAM COMBINATIONS 2

POWER TEAM MULTIPLICATION FACTORS 2

ENGINE DATA AND RATINGS 3

ENGINE SPEED AND PISTON TRAVEL 4

VEHICLE PERFORMANCE FACTORS 5

PRINCIPAL COMPONENTS 6-11

FUEL AND EXHAUST SYSTEM 12

EMISSION CONTROL EQUIPMENT 13

LUBRICATION SYSTEM 14

COOLING SYSTEM 15

ELECTRICAL SYSTEM 16

CLUTCH 17

FOUR-SPEED MANUAL TRANSMISSION 18-19

THREE-SPEED AUTOMATIC TRANSMISSION 20-21

POWER TEAM COMBINATIONS

ENGINE	TRANSMISSION	MODEL APPLICATION	AXLE RATIOS ALL STATES BASE	AXLE RATIOS ALL STATES OPTION	I.W. CLASS Kg (lbs.)
2.5 Liter L-4 (151 CID) Base – All States	4-Speed Manual	All Models	3.32	–	1304 (2875)
	3-Speed Auto. '125"		2.53	–	
2.8 Liter V-6 (173 CID) Optional – All States	4-Speed Manual	All Models	3.32	–	1361 (3000)
	3-Speed Auto. '125"		2.84	–	

MULTIPLICATION FACTORS

WITH MANUAL TRANSMISSION

ENGINE	CARBURETION	TRANSMISSION	TOTAL GEAR REDUCTION 1st	2nd	3rd	4th	Rev.	AXLE RATIO
2.5 Liter L-4 (151 CID)	2-Barrel	4-Speed	11.72	6.51	4.12	2.69	11.35	3.32:1
2.8 Liter V-6 (173 CID)								

WITH AUTOMATIC TRANSMISSION

ENGINE	TRANSMISSION	SELECTOR POSITION	TOTAL TORQUE MULTIPLICATION	AXLE RATIO
2.5 Liter L-4 (151 CID)	3-Speed Automatic '125'	Drive	13.65:1 - 2.53:1	2.53:1
		Second	13.65:1 - 4.05:1	
		Low	13.65:1 - 7.18:1	
		Reverse	9.95:1 - 5.24:1	
2.8 Liter V-6 (173 CID)	3-Speed Automatic '125'	Drive	15.32:1 - 3.84:1	2.84:1
		Second	15.32:1 - 4.54:1	
		Low	15.32:1 - 8.07:1	
		Reverse	11.17:1 - 5.88:1	

GENERAL DATA

Engine Type		L4 OHV, Inline	60° V-6, OHV
Piston Displacement	Liters	2.5	2.8
	Cu. In.	151	173
Availability		RPO LW9	RPO LE2
Number of Cylinders		4	6
Bore & Stroke	Millimeters	101.6 x 76.2	89 x 76
	Inches	4.00 x 3.00	3.50 x 3.00
Compression Ratios		8.2:1	8.5:1
Taxable (SAE)	Kilowatts	19.1	21.9
	Horsepower	25.6	29.4
Firing Order		1-3-4-2	1-2-3-4-5-6
Idling Speed	Manual	1000/N	1050/N (1100/N)
	Automatic	650/D	650/D (700/D)
Compression Press. @ Cranking Speed Engine Hot	Kilopascals	965-1069	1034*
	lb./in.^{2}	140-155	150*
Power Plant Mounting		Two front and two rear	
Measurements	Length – mm/in.	685.8/27.0(d)	668/26.3(a)
	Height – mm/in.	658.8/25.9 (b)	566/22.3(b)
	Width – mm/in.	546.1/21.5(e)	551/21.7(c)

(a) Rear face of case to water pump bearing shaft.
(b) Bottom of oil pan to top of air cleaner.
(c) L.H. exhaust manifold to R.H. pulsair can.

Data in brackets ( ) pertains to California.

* – No two cylinders vary by more than 207 kPa (30 psi.)
(d) Water pump to rear water outlet.
(e) Alternator to water pump pulley.

ADVERTISED ENGINE RATING

Engine Designation			2.5 Liter L-4 151 CID	2.8 Liter V-6 173 CID
Availability			RPO LW9	RPO LE2
Carburetion			2-barrel	
Net Brake HP @ Engine RPM	Federal	kW	67 @ 4000	86 @ 4800
		HP	90 @ 4000	115 @ 4800
	California	kW	67 @ 4400	82 @ 4800
		HP	90 @ 4400	110 @ 4800
Net Torque @ Engine RPM	Federal	N/m	182 @ 2400	197 @ 2400
		lb/ft.	134 @ 2400	145 @ 2400
	California	N/m	173 @ 2400	190 @ 2400
		lb/ft.	128 @ 2400	140 @ 2400

ENGINE SPEED AND PISTON TRAVEL

Engine			2.5 Liter L-4	
Transmission			4-Speed Manual	3-Speed Automatic
Rear Axle Ratio			3.32:1	2.53:1
Tire Size			P185/80R13	
Crankshaft Revs. per	Kilometer		1746.3	1330.8
	Mile		2808.7	2140.4
Crankshaft RPM @ 1 km/h & 1 mph	Low	km/h	63.8	39.1
		mph	165.2	101.3
	Second	km/h	35.4	22.1
		mph	91.7	57.1
	Third	km/h	22.4	13.8
		mph	58.0	35.7
	Fourth	km/h	14.6	–
		mph	37.9	–
	Reverse	km/h	61.8	28.5
		mph	160.1	73.8
Piston Travel	Millimeter/Kilometer		873.2	665.4
	Feet/Mile		1404.4	1070.2

ENGINE SPEED AND PISTON TRAVEL

Engine			2.8 Liter V-6	
Transmission			4-Speed Manual	3-Speed Automatic
Rear Axle Ratio			3.32:1	2.84:1
Tire Size			P185/80R13	
Crankshaft Revs. per	Kilometer		1746.3	1493.8
	Mile		2808.7	2402.6
Crankshaft RPM @ 1 km/h & 1mph	Low	km/h	63.8	44.0
		mph	165.2	113.6
	Second	km/h	35.4	24.8
		mph	91.7	64.0
	Third	km/h	22.4	15.5
		mph	58.0	40.0
	Fourth	km/h	14.6	–
		mph	37.9	–
	Reverse	km/h	61.8	32.1
		mph	160.1	82.8
Piston Travel	Millimeter/Kilometer		873.2	746.9
	Feet/Mile		1404.4	1201.3

ENGINE			2.5 Liter L-4 (151 CID) 67 kW (90 H.P.)	2.8 Liter V-6 (173 CID) 86 kW (115 H.P.)
Model			1XX08	1XX68

4-SPEED MANUAL TRANSMISSION

Performance	Mass-Kilograms		1400	1427
	Weight-Pounds		3087	3146
Kilograms per Net Kilowatts		Federal	20.89	16.59
		Calif.		17.40
Pounds per Net Horsepower		Federal	34.3	27.36
		Calif.		28.60
Kilograms per Liter Displacement			560.0	509.6
Pounds per Cu. In. Displacement			20.44	18.18
Net kW per Liter Displacement		Federal	26.80	30.71
		Calif.		29.29
Net H.P. per Cu. In. Displacement		Federal	0.596	0.665
		Calif.		0.636
Power Displacement	liter/kilometer		77.1	86.4
	cu. ft./mile		122.7	140.6
Displacement Factor	liter/tonne kilometer		50.0	54.9
	cu. ft/ton mile		79.5	89.4

3-SPEED AUTOMATIC TRANSMISSION

Performance	Mass-Kilograms		1414	1441
	Weight-Pounds		3115	3177
Kilograms per Net Kilowatts		Federal	21.09	16.76
		Calif.		17.57
Pounds per Net Horsepower		Federal	34.6	27.53
		Calif.		28.88
Kilograms per Liter Displacement			565.2	514.6
Pounds per Cu. In. Displacement			20.63	18.36
Net kW per Liter Displacement		Federal	26.80	30.71
		Calif.		29.29
Net H.P. per Cu. In. Displacement		Federal	0.596	0.665
		Calif.		0.636
Power Displacement	liter/Kilometer		58.8	73.9
	cu. ft./mile		93.5	120.3
Displacement Factor	liter/tonne kilometer		37.7	46.5
	cu. ft./ton mile		60.0	75.7

PRINCIPAL COMPONENTS

CYLINDER BLOCK
- Material . . . . . Cast alloy iron
- Bore Diameter
  - 2.5 Liter L-4 . . . . . 101.6-102.2 (4.00-4.024)
  - 2.8 Liter V-6 . . . . 88.992-89.070 (3.5036-3.5067)
- Bore Spacing – mm (in)
  - 2.5 Liter L-4 . . . . . 111.8 (4.40)
  - 2.8 Liter V-6 . . . . . 111.8 (4.40)
- Bearing Caps
  - 2.5 Liter L-4 . . . . . 5, cast iron, 2-bolt
  - 2.8 Liter V-6 . . . . . 4, cast iron, 2-bolt

CYLINDER HEAD
- Type
  - 2.5 Liter L-4 . . . . . Crossflow induction and exhaust configuration
  - 2.8 Liter V-6 . . . . . Individual intake and exhaust ports for each cylinder
- Material . . . . . Cast alloy iron
- Construction . . . . . Valve-in-head
- Bolt Number; Size – mm (in)
  - 2.5 Liter L-4 . . . . . 10; 12.7 (0.5) dia., 13 threads/in.
  - 2.8 Liter V-6 . . . . . 16; 10.0 (0.3937) dia., 14 threads/in.

COMBUSTION CHAMBER VOLUME
- Total Chamber Volume of Assembled Engine with Piston at Top Center – cm^3 (in^3)
  - 2.5 Liter L-4 . . . . . 85.2 (5.20)
  - 2.8 Liter V-6 . . . . . 63.1 (3.850)

INLET MANIFOLD
- Material
  - 2.5 Liter L-4 . . . . . Cast aluminum
  - 2.8 Liter V-6 . . . . . Cast aluminum
- Type
  - 2.5 Liter L-4 . . . . . 4-port design, temperature controlled by engine coolant
  - 2.8 Liter V-6 . . . . . 6-port design, provisions for exhaust heated carburetor plenum, EGR, thermal vacuum switches and coolant crossover

EXHAUST MANIFOLD
- Material . . . . . Nodular cast iron
- Type
  - 2.5 Liter L-4 . . . . . 3-port, center rear take-down
  - 2.8 Liter V-6 . . . . . Dual, 3-port center rear take-down
- Outlet Diameter
  - 2.5 Liter L-4 . . . . . 47.8 (1.88)
  - 2.8 Liter V-6 . . . . . 38.1 (1.50)

CRANKSHAFT
- Material . . . . . Nodular cast iron
- Counterweights
  - 2.5 Liter L-4 4
  - 2.8 Liter V-6 2
- Crank Arm Length – mm (in)
  - 2.5 Liter L-4 . . . . . 38.1 (1.50)
  - 2.8 Liter V-6 . . . . . 40.5 (1.59)
- End Play – mm (in)
  - 2.5 Liter L-4 . . . . . 0.089-0.216 (.0035-.0085)
  - 2.8 Liter V-6 . . . . . 0.05-0.20 (.0020-.0079)
- Drive and/or Timing Gear
  - 2.5 Liter L-4 . . . . . Cast iron sprocket
  - 2.8 Liter V-6 . . . . . Sintered iron, sprocket and chain
- Pulley Pitch Diameter – mm (in)
  - 2.5 Liter L-4 . . . . . 168 (6.61)
  - 2.8 Liter V-6 . . . . . 168 (6.61)

MAIN BEARINGS
- Type . . . . . Precision, removable
- Material
  - 2.5 Liter L-4 . . . . . Premium aluminum
  - 2.8 Liter V-6 . . . . . No. 1 – Conecc: No. 2-3-4 – aluminum with overplate
- Thrust Against Bearing
  - 2.5 Liter L-4 . . . . . No. 5
  - 2.8 Liter V-6 . . . . . No. 3
- Clearance – mm (in)
  - 2.5 Liter L-4 . . . . . 0.005-0.056 (.0002-.0022)
  - 2.8 Liter V-6 . . . . . 0.013-0.038 (.0005-.0015)

Dimensions	Theoretical I. D.		Effective Length		Projected Area	
	mm	in.	mm	in.	cm^2	in^2
2.5 Liter L-4						
Bearing #1, 2, 3, 4	58.4	2.30	20.3	.80	1185.5	1.840
Bearing #5	58.4	2.30	25.6	1.01	1495.0	2.323
2.8 Liter V-6						
Bearing #1	63.384	2.4954	23.265	.9159	1474.2	2.2856
Bearing #2	63.384	2.4954	17.465	.6876	1106.7	1.7158
Bearing #3	63.384	2.4954	17.96	.7071	1138.1	1.7645
Bearing #4	63.384	2.4954	30.435	1.1982	1928.5	2.9900

CRANKSHAFT AND BEARINGS
2.8 LITRE V-6 ENGINE

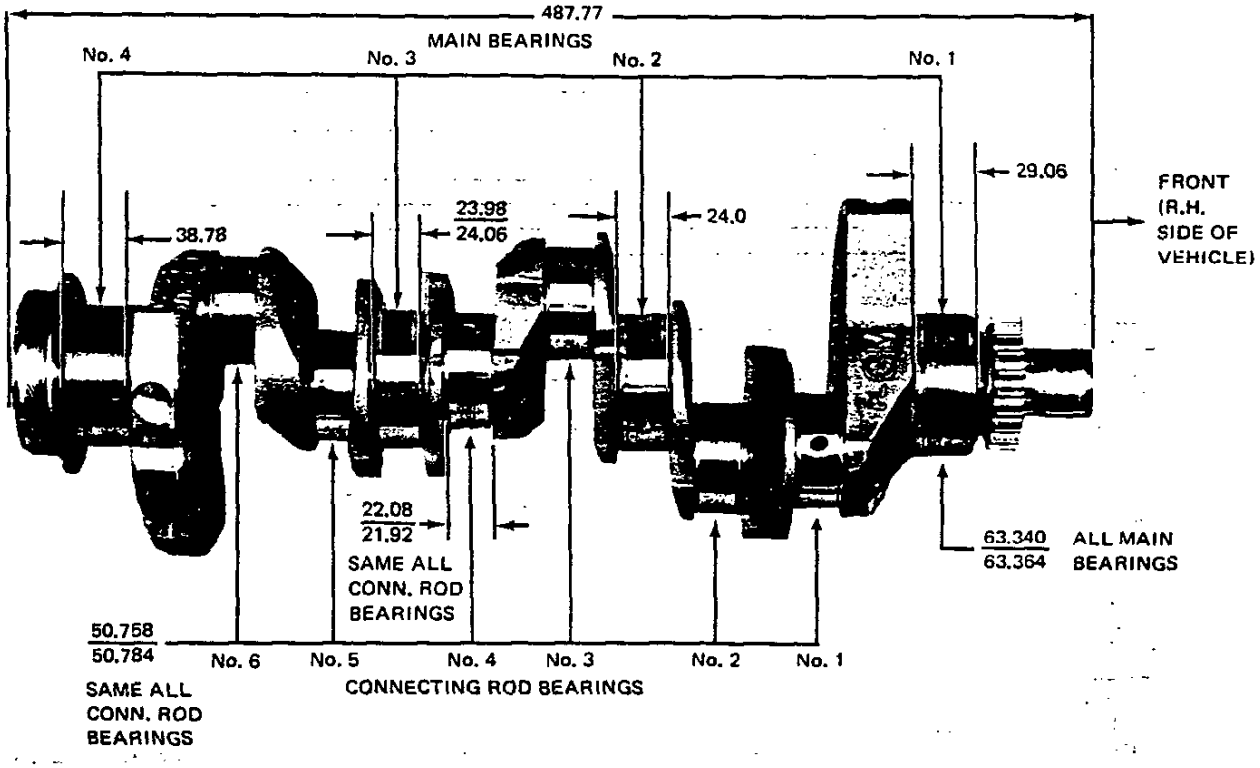

PRINCIPAL COMPONENTS

CAMSHAFT
- Material . . . . . Cast alloy iron
- Location
  - 2.5 Liter L-4 . . . . . Right side of engine block
  - 2.8 Liter V-6 . . . . . Above crank at center of 'V'
- Type Drive
  - 2.5 Liter L-4 . . . . . Gear
  - 2.8 Liter V-6 . . . . . Chain
- Crankshaft Gear Material
  - 2.5 Liter L-4 . . . . . Cast iron
- Camshaft Gear Material
  - 2.5 Liter L-4 . . . . . Bakelite and fabric composition with steel hub
- Crankshaft & Camshaft Sprocket Material
  - 2.8 Liter V-6 . . . . . Hardened sintered iron
- Timing Gear Chain
  - 2.8 Liter V-6
    - No. of Links 64
    - Width . . . . . 19 (.748)
    - Pitch . . . . . 9.5 (.375)
- Lobe Lift
  - 2.5 Liter L-4
    - Inlet & Exhaust 5.8801 (0.2315)
  - 2.8 Liter V-6
    - Inlet 5.8732 (0.2312)
    - Exhaust 6.672 (0.2627)
- Bearings
  - 2.5 Liter L-4 . . . . . 3; steel backed babbitt
  - 2.8 Liter V-6 . . . . . 4; steel backed babbitt

VALVE TRAIN
- Type . . . . . Individually mounted, overhead rocker arms, push rod actuated
- Valve Lifters . . . . . Hydraulic
- Rocker Arm Ratio
  - 2.5 Liter L-4 . . . . . 1.75:1
  - 2.8 Liter V-6 . . . . . 1.50:1
- Push Rods
  - Material . . . . . Steel
  - Type . . . . . Hollow
  - Ends . . . . . Hardened
  - Diameter . . . . . 7.9375 (.3125)
- Rotators
  - 2.5 Liter L-4 . . . . . None
  - 2.8 Liter V-6 . . . . . Exhaust
- Valve Lift
  - 2.5 Liter L-4 . . . . . 10.3 (.406)
  - 2.8 Liter V-6
    - Inlet . . . . . 8.805 (.347)
    - Exhaust . . . . . 10.0 (.393)

VALVE SPRINGS
- Type
  - 2.5 Liter L-4 . . . . . Single spring – no damper
  - 2.8 Liter V-6 . . . . . Single spring with damper
- Diameter – mm (in)
  - 2.5 Liter L-4 . . . . . 22.35 (0.880)
  - 2.8 Liter V-6 . . . . . 31.3 (1.232)
- Free Length – mm (in)
  - 2.5 Liter L-4 . . . . . 52.8 (2.08)
  - 2.8 Liter V-6 . . . . . 48.5 (1.91)
- Installed Length – N/mm (lb @ in)
  - Valves Closed
    - 2.5 Liter L-4 . . . 347-382 @ 42.2 (78-86 @ 1.66)
    - 2.8 Liter V-6 . . . . . 391 @ 40.9 (88 @ 1.61)
  - Valves Opened
    - 2.5 Liter L-4 . 765-800 @ 31.85 (172-180 @ 1.25)
    - 2.8 Liter V-6 . . . . . 867 @ 29.5 (195 @ 1.16)
- Valve Spring Damper
  - 2.5 Liter L-4 . . . . . None
  - 2.8 Liter V-6 . . . . . Flat steel, 4 coils

VALVES–INLET

Material	SAE 1541 or 1547 steel
All Stems	Chrome flash
Coating	None
Stem Diameter – mm (in)	
2.5 Liter L-4	8.68-8.70 (.3417-.3425)
2.8 Liter V-6	8.661-8.679 (.3410-.3417)
Overall Length – mm (in)	
2.5 Liter L-4	115.7 (4.55)
2.8 Liter V-6	119.4 (4.70)
Gage Length - mm (in)	
2.5 Liter L-4	115.75 (4.557)
2.8 Liter V-6	117.49-117.74 (4.626-4.635)
Overall Head Diameter – mm (in)	
2.5 Liter L-4	43.7 (1.72)
2.8 Liter V-6	40.51-40.77 (1.59-1.61)
Angle of Face (deg.)	45
Guide Diameter – mm (in)	
2.5 Liter L-4	8.725-8.750 (.3435-.3445)
2.8 Liter V-6	8.705-8.729 (.3427-.3437)
Angle of Seat (deg.)	
2.5 Liter L-4	46
2.8 Liter V-6	46
Valve Angle (deg.)	
2.5 Liter L-4	9
2.8 Liter V-6	0 (90° to vertical)
Valve Seat (Cutter) Dia. – mm (in)	
2.5 Liter L-4	
2.8 Liter V-6	46.2 (1.819)

VALVES–EXHAUST

Material	21-2 N steel
Stems	Chrome flash
Stem Diameter – mm (in)	
2.5 Liter L-4	8.68-8.70 (.3417-.3425)
2.8 Liter V-6	8.661-8.679 (.3410-.3417)
Overall Length – mm (in)	
2.5 Liter L-4	114.0 (4.488)
2.8 Liter V-6	120.1 (4.728)
Gage Length – mm (in)	
2.5 Liter L-4	114.02 (4.489)
2.8 Liter V-6	117.49-117.74 (4.626-4.635)
Overall Head Diameter – mm (in)	
2.5 Liter L-4	38.1 (1.50)
2.8 Liter V-6	33.07-33.33 (1.302-1.312)
Angle of Face (deg.)	45
Guide Diameter – mm (in)	
2.5 Liter L-4	8.725-8.750 (.3435-.3445)
2.8 Liter V-6	8.705-8.729 (.3427-.3437)
Angle of Seat (deg.)	
2.5 Liter L-4	45
2.8 Liter V-6	46
Valve Angle (deg.)	
2.5 Liter L-4	9
2.8 Liter V-6	0 (90° to vertical)
Valve Seat (Cutter) Dia. – mm (in)	
2.5 Liter L-4	34.9 (1.374)
2.8 Liter V-6	38.6 (1.520)

VALVE TIMING (Crankshaft Degrees – Excluding Ramps)

2.5 Liter L-4	
Inlet Valve	
Opens – °BTC	33
Closes – °ABC	81
Duration (deg.)	294
Exhaust Valve	
Opens – °BBC	76
Closes – °ATC	38
Duration (deg.)	294
Valve Open Overlap (deg.)	71
2.8 Liter V-6	
Inlet Valve	
Opens – °BTC	25
Closes – °ABC	81
Duration (deg.)	286
Exhaust Valve	
Opens – °BBC	69
Closes – °ATC	55
Duration (deg.)	304
Valve Open Overlap (deg.)	80

PISTONS

Material	Cast aluminum alloy
Head Type	
2.5 Liter L-4	Sump
2.8 Liter V-6	Flat
Skirt	
2.5 Liter L-4	Cam ground slipper
2.8 Liter V-6	Slipper
Top Land Clearance – mm (in)	
2.5 Liter L-4	0.762-.950 (.030-.0374)
2.8 Liter V-6	0.642-.870 (.0253-.0343)
Skirt Clearance – mm (in)	
2.5 Liter L-4	0.043-.104 (.0017-.0041)
2.8 Liter V-6	0.043-.069 (.0017-.0027)
Compression Ring Groove Depth – mm (in)	
2.5 Liter L-4	4.533-5.042 (.1785-.1985)
2.8 Liter V-6	
Upper	4.59-4.89 (.1807-.1925)
Lower	4.685-4.94 (.1845-.1945)
Oil Ring Groove Depth – mm (in)	
2.5 Liter L-4	5.207-5.359 (.2050-.2110)
2.8 Liter V-6	4.98-5.21 (.1961-.2051)
Pin Bore	
Direction	Major thrust side
Offset – mm (in)	
2.5 Liter L-4	1.60 (.063)
2.8 Liter V-6	1.50 (.059)
Compression Height – mm (in)	
2.5 Liter L-4	39.83-40.44 (1.568-1.592)
2.8 Liter V-6	40.6 (1.60)

PISTON PINS

Material	
2.5 Liter L-4	Chromium steel
2.8 Liter V-6	Chromium steel
Pin Mounting	
2.5 Liter L-4	Locked in rod
2.8 Liter V-6	Locked in rod by shrink fit
Length – mm (in)	
2.5 Liter L-4	76.2 (3.0)
2.8 Liter V-6	70.0 (2.75)
Diameter – mm (in)	
2.5 Liter L-4	23.82-23.93 (.938-.942)
2.8 Liter V-6	22.9937-23.0015 (.905-.906)
Clearance in Piston – mm (in)	
2.5 Liter L-4	0.005-.010 (.0002-.0004)
2.8 Liter V-6	0.006-.009 (.0002-.0004)

COMPRESSION RING – UPPER

Material	Cast nodular iron
Type	
2.5 Liter L-4	Reverse twist
2.8 Liter V-6	Straight edge inside of ring
Face	
2.5 Liter L-4	Barrel
2.8 Liter V-6	Barrel
Coating	
2.5 Liter L-4	Moly channel
2.8 Liter V-6	Molybdenum filled channel
Width – mm (in)	
2.5 Liter L-4	1.969-1.980 (.0775-.0780
2.8 Liter V-6	1.960-1.990 (.0772-.0783)
Wall Thickness - mm (in)	
2.5 Liter L-4	4.50-4.75 (.177-.187)
2.8 Liter V-6	3.93-4.18 (.155-.165)
Gap - mm (in)	
2.5 Liter L-4	0.381-.635 (.015-.025)
2.8 Liter V-6	0.25-.50 (.010-.020)

COMPRESSION RING – LOWER

Material	Cast alloy iron
Type	
2.5 Liter L-4	Reverse twist
2.8 Liter V-6	Reverse twist
Face	
2.5 Liter L-4	Tapered
2.8 Liter V-6	Tapered
Coating	
2.5 Liter L-4	Tin plate
2.8 Liter V-6	Lubrited
Width – mm (in)	
2.5 Liter L-4	1.969-1.980 (.0775-.0780)
2.8 Liter V-6	1.960-1.975 (.0772-.0778)
Wall Thickness – mm (in)	
2.5 Liter L-4	4.50-4.75 (.177-.187)
2.8 Liter V-6	3.93-4.18 (.155-.165)
Gap – mm (in)	
2.5 Liter L-4	0.229-.483 (.009-.019)
2.8 Liter V-6	0.25-.50 (.010-.020)

OIL CONTROL RINGS

Type	Multi-piece (two rails and one spacer)
Material – Rails	
2.5 Liter L-4	Steel with chrome plated O.D.
2.8 Liter V-6	Flat spring steel
Material – Spacer	
2.5 Liter L-4	Stainless steel
2.8 Liter V-6	Steel
Width (Assembled) – mm (in)	
2.5 Liter L-4	4.80 (.189)
2.8 Liter V-6	4.80 (.189)
Wall Thickness – mm (in)	
2.5 Liter L-4	3.86-4.01 (.152-.158)
2.8 Liter V-6	3.43-3.59 (.135-.141)
Gap – mm (in)	
2.5 Liter L-4	0.38-1.40 (.015-.055)
2.8 Liter V-6	0.51-1.40 (.020-.055)

CONNECTING RODS

Material	
2.5 Liter L-4	Cast arma steel
2.8 Liter V-6	SAE 1038 steel
Length (Center-to-Center) – mm (in)	
2.5 Liter L-4	153.7 (6.05)
2.8 Liter V-6	144.65-144.91 (5.69-5.71)

CONNECTING ROD BEARINGS

Material	
2.5 Liter L-4	Steel backed premium aluminum
2.8 Liter V-6	Steel backed aluminum with overplate
Clearance – mm (in)	
2.5 Liter L-4	0.013-.066 (.0005-.0026)
2.8 Liter V-6	0.012-.052 (.0005-.0020)
Theoretical Diameter – mm (in)	
2.5 Liter L-4	53.980 (2.1252)
2.8 Liter V-6	50.803 (2.0001)
Effective Length – mm (in)	
2.5 Liter L-4	18.72 (.737)
2.8 Liter V-6	17.45 (.687)
End Play – mm (in)	
2.5 Liter L-4	0.15-.59 (.006-.022)
2.8 Liter V-6	0.15-.43 (.006-.017)

FUEL AND EXHAUST SYSTEM

FUEL SYSTEM

FUEL TANK
- Capacity – L (gal.) . . . . . 53 (14) approximately
- Location . . . . . Mounted below and to rear of rear seat location, outside body shell
- Filler Location . . . . . Left rear quarter panel

FUEL FILTERS
- In Fuel Tank . . . . . Fine mesh plastic strainer
- In Carburetor Inlet . . . . . Pleated paper element with integral check valve

FUEL PUMP
- Type . . . . . Mechanical
- Location
  - 2.5 Liter L-4 . . . . . Right side front of engine
  - 2.8 Liter V-6 . . . . . Left side front of engine
- Pressure Range - kPa (psi)
  - 2.5 Liter L-4 . . . . . 45-55 (6.5-8.0)
  - 2.8 Liter V-6 . . . . . 41-52 (6.0-7.5)

AIR CLEANER
- Type . . . . . Replaceable paper element, single snorkel

CHOKE
- Type
  - 2.5 Liter L-4 . . . . . Electric
  - 2.8 Liter V-6 . . . . . Electric

CARBURETOR
- Type
  - 2.5 Liter L-4 . . . . . Varajet II, 2-barrel
  - 2.8 Liter V-6 . . . . . Varajet II, 2-barrel
- Throttle Bore Diameter – mm (in)
  - 2.5 Liter L-4 . . . . . Primary - 28.0 (1.10); Secondary – 46 (1.81)
  - 2.8 Liter V-6 . . . . . Primary – 35.0 (1.38); Secondary – 46 (1.81)
- Venturi Diameter – mm (in)
  - 2.5 Liter L-4 . . . . . Primary – 28 (1.10) Secondary – air valve
  - 2.8 Liter V-6 . . . . . Primary – 30 (1.18) Secondary – air valve

EXHAUST SYSTEM

TYPE
- 2.5 Liter L-4 . . . . . Single with converter
- 2.8 Liter V-6 . . . . . Single with converter

MUFFLER
- Type . . . . . Reverse flow
- Construction . . . . . Heads and body joined by rolled lock seam construction
- Head . . . . . Sheet metal, aluminized
- Shell . . . . . Sheet metal, aluminized
- Wrap . . . . . Indented asbestos sheet
- Cover . . . . . Sheet metal, aluminized
- Body – length – mm (in)
  - 2.5 Liter L-4 . . . . . 406 (16.0)
  - 2.8 Liter V-6 . . . . . 457 (18.0)
  - Height 127 (5.0)
  - Width 235 (9.25)

EXHAUST PIPE TO CONVERTER
- Material . . . . . Laminated stainless steel
- Dimensions (O.D.) – mm (in)
  - Crossover
    - 2.8 Liter V-6 . . . . . 44.5 (1.75)
  - Main
    - 2.5 Liter L-4 . . . . . 50.8 (2.0)
    - 2.8 Liter V-6 . . . . . 50.8 (2.0)

INTERMEDIATE PIPE – CONVERTER TO MUFFLER
- Material . . . . . Stainless steel
- Dimension (O.D.) – mm (in)
  - 2.5 Liter L-4 . . . . . 44.5 (1.75)
  - 2.8 Liter V-6 . . . . . 50.8 (2.0)

TAIL PIPE
- Material . . . . . Aluminized steel
- Dimension (O.D.) – mm (in)
  - 2.5 Liter L-4 . . . . . 44.5 (1.75)
  - 2.8 Liter V-6 . . . . . 50.8 (2.0)

SYSTEM APPLICATION

SYSTEM TYPE	ENGINE ADAPTATION			
	2.5 Liter L-4		2.8 Liter V-6	
	Federal	Calif.	Federal	Calif.
CHA – Carburetor Hot Air	X	X	X	X
COA – Carburetor Outside Air	X	X	X	X
EGR – Exhaust Gas Recirculation	–	X	–	X
P-EGR – Exhaust Pressure Modulated EGR	X	–	X	–
PAI – Pulse Air Injection	X	–	X	X
UFC – Underfloor Converter	X	–	X	–
C-4 – Computer Controlled Catalytic Converter	–	X	–	X
FEC – Fuel Evaporation Control	X	X	X	X
PCV – Positive Crankcase Ventilation	X	X	X	X
EFE – Early Fuel Evaporation	–	–	X	X

BASIC FUNCTIONS OF SYSTEMS

CARBURETOR HOT AIR SYSTEM

A thermostatically controlled air induction system designed to aid carburetion. Consists of a heat stove to supply preheated air and a vacuum powered damper to mix air normally drawn in through the snorkel with the hot air. Produces a more uniform carburetor air temperature which permits proper emission control with improved engine operation.

CARBURETOR OUTSIDE AIR

Duct work connecting air cleaner snorkel to air source outside of engine compartment. Provides cooler outside air to CHA system for improved performance after engine warm-up.

EXHAUST PRESSURE MODULATED EGR

Meters exhaust gas into induction system for recirculation throughout the combustion cycle to reduce oxides of nitrogen emissions. Exhaust pressure modulation in addition to vacuum modulation to increase control perimeters.

EXHAUST GAS RECIRCULATION SYSTEM

Meters exhaust gas into induction system for recirculation through the combustion cycle to reduce oxides of nitrogen emissions.

PULSE AIR INJECTION

Compresses, regulates and distributes quantities of air to the exhaust manifold to more completely burn carbon monoxide and hydrocarbon emissions.

UNDERFLOOR CATALYTIC CONVERTER

A device placed in the exhaust system containing the catalytic bed through which exhaust gasses are passed. The catalyst may be configured to cause both a reduction and oxydation reaction, or an oxydation reaction only.

COMPUTER CONTROLLED CATALYTIC CONVERTER SYSTEM

A system designed to monitor engine functions and through an on-board computer, combine precise electronic carburetor control of fuel-air ratio near the stoichiometric with an oxidation-reduction catalytic converter to control emissions. This system achieves low levels of hydrocarbons and carbon monoxide emissions while significantly lowering oxides of nitrogen.

FUEL EVAPORATION CONTROL SYSTEM

Controls emission of gasoline vapors to the atmosphere by means of an integral separator chamber within the fuel tank that separates vapor from liquid fuel – a filler cap that doesn't permit venting into the atmosphere – a canister for storage of vapors – lines, hoses and valves to control and transport vapors from fuel tank and carburetor float bowl to storage, and finally, to the carburetor for utilization in running the engine.

POSITIVE CRANKCASE VENTILATION

Withdraws oil and gas vapors from the various cavities throughout the engine for burning in the combustion cycle.

EARLY FUEL EVAPORATION

A thermostatically controlled system designed to supply hot exhaust gasses to heat carburetor base and inlet manifold during early stages of cold engine operation. Improves cold engine driveability during warm-up.

LUBRICATION SYSTEM

GENERAL

Type of Lubrication	Controlled full pressure
Main Bearings	Pressure
Piston Pins	Pressure
Cylinder Walls	Splash
Camshaft Bearings	Pressure
Hydraulic Valve Lifters	Pressure
Connecting Rods	Nozzle
Timing Gear or Chain	Splash
Oil Pressure Sending Unit	Electric
Oil Filler	
Cap	Positive seal
Location	
2.5 Liter L-4	Top front of valve cover
2.8 Liter V-6	Top front of left valve cover

OIL PUMP V6

Type	Gear
Regulator Valve - kPa (lbs.)	241 (35)
Oil Pressure - kPa (lbs.)	
@ 2000 engine RPM	207-310 (30-45)
Intake, Type	Stationary, fixed pickup with screen

OIL FILTER

Type	Full flow, throwaway
Location	Lower front, left side
Capacity – L (Quarts)	
2.5 Liter L-4	0.276 (o.2916)
2.8 Liter V-6	0.293 (0.3096)
By Pass Valve	Opens between 68.9-82.7 kPa (10-12 psi)

LUBRICANT GRADES AND TEMPERATURES

-6.6°C (20°F) and above	10W-30, 10W-40, 20W-20, 20W-40, 20W-50
-17.7°C to +15.5°C (0°F to 60°F)	10W, 5W-30, 10W-30, 10W-40
-6.6°C (20°F) and below	5W-20, 5W-30

OIL PAN

Capacity – Liters (Quarts)	
2.5 Liter L-4	2.84 (3.0)
2.8 Liter V-6	3.8 (4.0)
Refill with Filter Change – Liters (Quarts)	
2.5 Liter L-4	3.116 (3.2916)
2.8 Liter V-6	4.093 (4.3096)
Drain Plug	
Type	Hex head
Location	Right lower face of oil pan sump
Hex Head Size – mm (in)	14.00-14.30 (.551-.563)
Thread	1/2-20 UNF-2A
Length – mm (in)	20.6 (.81)
Diameter – mm (in)	10.41-10.92 (.410-.430)

COOLING SYSTEM

GENERAL

Type . . Pressure, vented thru coolant recovery system

Capacity - Liters (Quarts)

- 2.5 Liter L-4
  - Manual Transmission 7.87 (8.317)
  - Automatic Transmission 7.77 (8.210)
- 2.8 Liter V-6
  - Manual Transmission 9.69 (10.239)
  - Automatic Transmission 9.59 (10.133)

RADIATOR

Type . . . . . Cross flow, tube & center

Distance between Fins - mm (in)

2.5 Liter L-4	Manual	Automatic
Base	6.0 (.24)	4.6 (.18)
A.C.	5.0 (.20)	4.1 (.16)
H.D. (RPO V08)	3.6 (.14)	

2.8 Liter V-6	49 States	Calif.	
Base	6.0 (.24)	5.0 (.20)	4.1 (.16)
A.C.	5.0 (.20)	3.6 (.14)	
H.D. (RPO V08)	3.6 (.14)		

Distance between Tubes - mm (in) . . . . . 14 (.55)

Core Thickness - mm (in)

- Base 25 (1.0)
- Air Conditioning 25 (1.0)
- Heavy Duty (RPO V08) 40.2 (1.58)

Frontal Area - cm^2 (in^2)

- Base 1666 (258)
- Air Conditioning 2325 (360)
- Heavy Duty (RPO V08) 2325 (360)

Radiator Cap Relief Valve . . . Opens at approximately 103.4 kPa (15 psi)

THERMOSTAT

Type . . . . . Pellet

Begins to Open - °C (°F) 90.6 (195)

Fully Opened - °C (°F) 104.3 (227)

RADIATOR HOSE

Outlet, Lower (radiator to water pump)

- Type . . . . . One, molded
- I.D. - mm (in)
  - 2.5 Liter L-4 . . . . . 31.8 (1.25)
  - 2.8 Liter V-6 . . . . . 38.1 (1.50)

Inlet, Upper (Thermostat Hsg.)

- Type . . . . . One, molded
- I.D. - mm (in) 31.8 (1.25)

FAN

Number of Blades . . . . . 7, unequally spaced

Material . . . . . Plastic

Diameter - mm (in) 350 (13.78)

Mounting Location . . . . . Radiator

Type Drive . . . . . Electric

Type Fan Cut-Out . . . . . Thermostatically controlled

WATER PUMP

Type . . . . . Centrifugal, die cast aluminum housing

Drive . . . . . Fan belt

Capacity @ 2000 engine RPM . . . 134.4 kPa (19.5 psi)

DRAIN LOCATIONS

Engine Block

- 2.5 Liter L-4 . . . . . Left side of block
- 2.8 Liter V-6 . . . . . One each side of block

Radiator . . . . . Right rear lower side

ELECTRICAL SYSTEM

SUPPLY SYSTEM
- Battery
  - Type . . . . . 'Freedom', side terminal
  - Voltage Rating 12
  - Watts
    - Base 3200
    - H. D. (RPO UA1) 4000
  - Cold Cranking Capacity (reserve capacity)
    - Base . . . . . 80 minute
    - H. D. (RPO UA1) . . . . . 100 minute
  - Location . . . . . L. H. side of engine compartment

ALTERNATOR
- Type . . . . . Diode rectified with integral regulator
- Rating
  - Amps 42
  - Volts 12
- Drive . . . . . 'V' type fan belt
- Pulley P. D. – mm (in) 61.7 (2.43)
- Ratio (Gen. to engine speed) 2.72:1

REGULATOR
- Type . . . . Micro-circuit unit, integral with alternator
- Voltage Regulator
  - Voltage

IGNITION DISTRIBUTORS . . . . . Refer to chart below

STARTING SYSTEM
- STARTING MOTOR
  - Rotation (Drive End View) . . . . . Clockwise
  - Motor Drive
    - Engagement . . . . . Solenoid
    - Pinion Meshes at . . . . . Front
    - Pinion Teeth Number 9
    - Flywheel Teeth Number 142
    - No Load Test
      - Amps 45-70
      - RPM 7000-11900

COIL
- Type . . . . . Integral with distributor cap

SPARK PLUGS
- Make . . . . . A. C. Spark Plug
- Type
  - 2.5 Liter L-4 . . . . . R43TSX
  - 2.8 Liter V-6 . . . . . R44TS
- Thread Size – mm M14
- Gap – mm (in)
  - 2.5 Liter L-4 . . . . . 1.52 (.060)
  - 2.8 Liter V-6 . . . . . 1.10 (.045)
- Tightening Torque – N·m (lb. ft.)
  - 2.5 Liter L-4 . . . . . 20-34 (15-25)
  - 2.8 Liter V-6 . . . . . 9-20 (7-15)

DISTRIBUTORS	2.5 Liter L-4 RPO LW9				2.8 Liter V-6 RPO LE2			
Model	1110783	(1110787)	1110782	(1110786)	1103362	(1103364)	1103361	(1103363)
Type	High Energy Ignition (H. E. I.)							
Centrifugal Adv. begins @ RPM	0 @ 1400		0 @ 1050		0 @ 900			
Max. Degrees @ RPM	21 @ 4000		21 @ 4000		26 @ 4800		22 @ 4800	
Vacuum Adv. Begins @ kPa	0 @ 12		0 @ 12		0 @ 13.5		0 @ 13.5	
Max. Degrees @ kPa	20 @ 27	20 @ 30	20 @ 27	20 @ 30	20 @ 24.3		20 @ 33.8	
Timing (Initial design setting) Crankshaft Deg. @ RPO (w/vacuum line disconnected)	10° BTC (12° BTC)		10° BTC		4° BTC (6° BTC)		8° BTC (10° BTC)	
Timing Mark Location	Torsional Damper							

Data in brackets ( ) pertains to California.

CLUTCHES

Engine			2.5 Liter L-4	2.8 Liter V-6
Clutch for			4-Speed	
Type			Cable actuated, self adjusting	
Clutch Cover & Pressure Plate	Eff. plate load		1100	1280
	Press. plate material		Nodular iron	
	Clutch spring type		Diaphragm	
	Clutch spring material		Heat treated spring steel	
Driven Plate	Type		Belleville spring	
	Cushions		Wave spoke springs	
	Dampers		Coil springs	
	Friction Rings	O. D. – mm (in)	232 (9.12)	246 (9.685)
		I. D. – mm (in)	155 (6.12)	152 (6.0)
		Total Area cm^2 (in^2)	463 (71.82)	586 (90.8)
		Material	Woven type asbestos	
Flywheel	Flywheel	Material	Nodular iron	
	Ring Gear	Material	Heat treated HR steel	
		No. of teeth	142	
		P. D.	303.9 (11.96)	300.6 (11.8)
		Attachment	Shrink fit	
Bearings	Release	Type	Ball thrust	
		Lubrication	Prepacked	
	Pilot	Type	Bronze bushing	
		Lubrication	None, sintered & oil impregnated	
Controls	Clutch fork		Drop forged steel, pivot mounted on ball	
	Pedal mounting		Pendant from brace on dash	
	Lubrication		Crossover shaft	
Clutch Housing Material			Aluminum	

FOUR-SPEED MANUAL TRANSMISSION

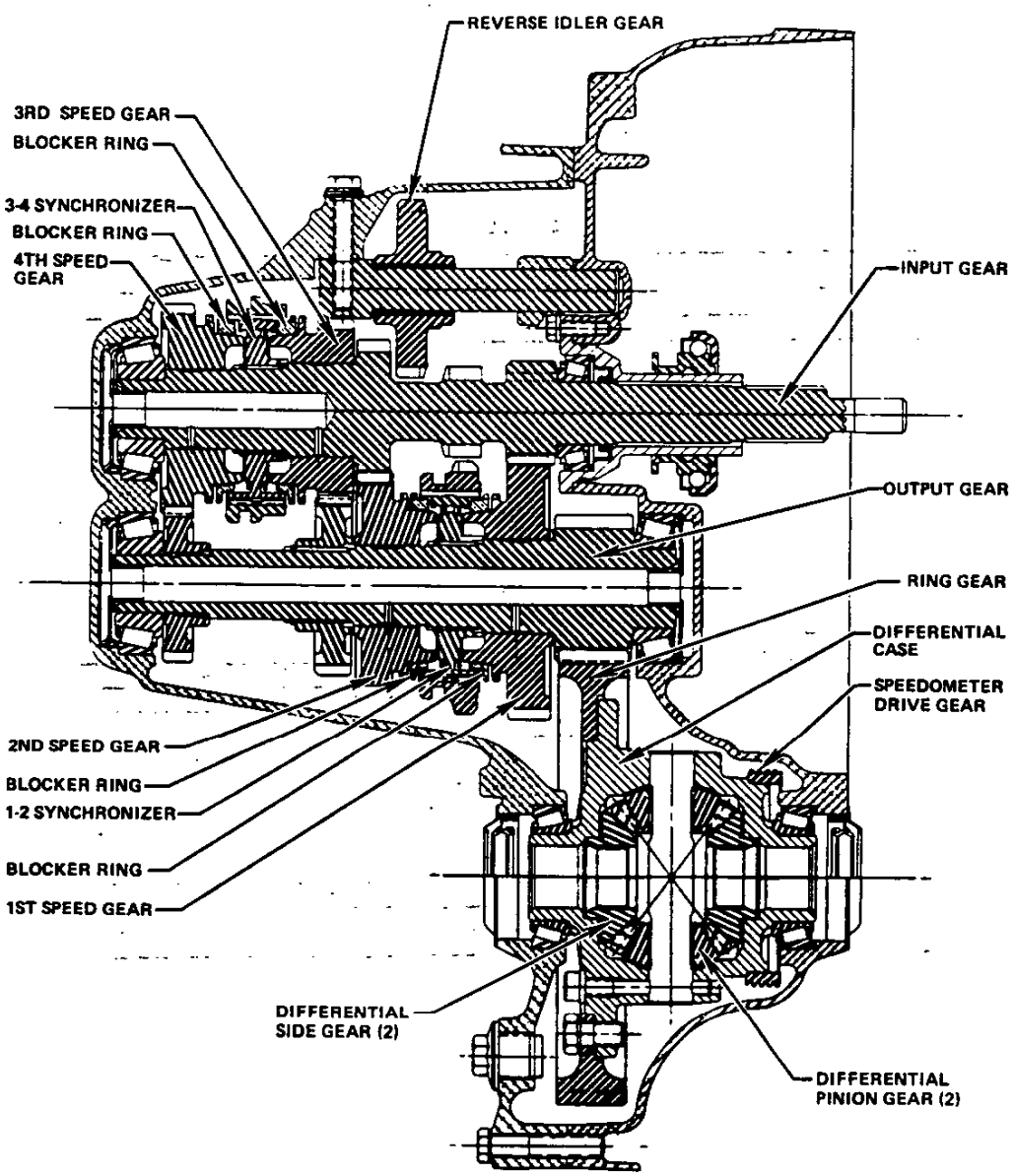

4-SPEED TRANSMISSION

Type			4-Speed Manual
Case Material			2-piece aluminum
Gear Shift	Type		Dual cable link to transmission
	Control		Lever
	Location		Floor mounted
Gears	Type		Helical
	Material		Forged steel hardened
	Synchronization		All forward gears
	Constant mesh gears		All forward
	Sliding gears		Reverse
	Ratios	First	3.53
		Second	1.96
		Third	1.24
		Fourth	0.81
		Reverse	3.42
Lubricant	Type		Dexron II (a)
	Capacity – L (pints)		2.8 (5.9)

(a) Common for transmission and differential.

THREE-SPEED AUTOMATIC TRANSMISSION

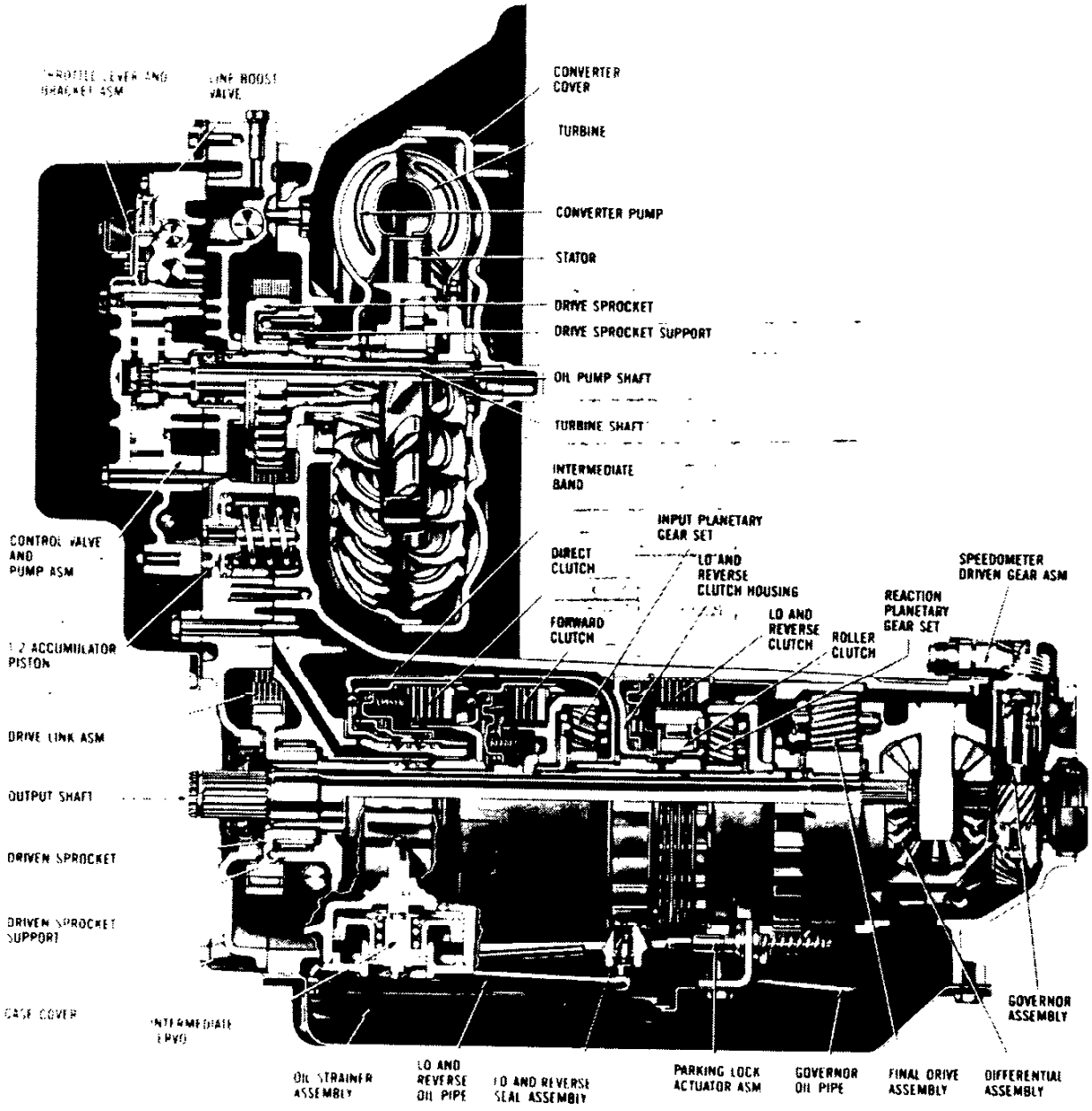

THREE-SPEED AUTOMATIC TRANSMISSION

Engine			2.5 Liter L-4	2.8 Liter V-6
General	Type		3-speed with torque converter Single axis with variable Displacement pump, 3-forward speeds and reverse	
	Selector Lever	Location	Steering column	
		Operation	Single cable design	
		Quadrant	P–R–N–D–L_2–L_1	
	Mounting		Transverse at LH side of vehicle	
	Case Material		2-piece aluminum	
	Type Drive		Chain	
	Final Drive Type		Planetary gearing	
	Modulation System		TV cable	
	Method of Cooling		Liquid	
	Parking Lock		Applied by selector lever thru manual linkage	
Converter	No. of Elements		3	
	Diameter – mm (in)		254 (10.0)	
	Torque Ratio		1.9:1	
	Stall Speed – RPM		1750	
Torque Multiplication	Drive		5.40:1 to 1.00:1	
	Second		5.40:1 to 1.60:1	
	Low		5.40:1 to 2.84:1	
	Reverse		3.93:1 to 2.07:1	
Clutches	Type		Three multiple disk	
	Material	Drive plates	Steel with bonded organic facings	
		Driven plates	Flat steel	
	Forward clutch		4 each drive & driven plates	
	Direct clutch		4 each drive & driven plates	
	Low & rev. clutch		5 each drive & driven plates	
Transmission Ratios	D (Drive)		2.84 – 1.60 – 1.00	
	Low_2		2.84 – 1.60	
	Low_1		2.84	
	Reverse		2.07	
Governor	Operation		Regulates a pressure proportional to car speed which acts upon the (1-2) (2-3) shift and modulator valves	
Lubricant	Type		Dexron II	
	Capacity	Dry	5.7L (12 pints)	
		Refill	3.8L (8.0 pints)	