'95 CAVALIER

Safety & security

• **Driver- and Passenger-Side Air Bags** — designed to help prevent injury in certain moderate to severe frontal collisions. Always wear safety belts, even with air bags. • **Four-Wheel Anti-Lock Brakes** — designed to help reduce wheel lockup and help maintain steering control during severe braking situations, even on slippery surfaces. • **Body-Mounted Active Front-Seat Safety Belts** — feature adjustable guide loops for added comfort. • **Rear-Seat Safety Belt Child Comfort Guides** — provide comfortable placement of safety belts for smaller rear-seat occupants. • **Safety-Cage Construction** — Cavalier features a rigid safety cage surrounding the entire passenger compartment and energy-absorbing front and rear body structures, making it feel solid, stable and well-built. • **5-MPH Bumpers** — front and rear bumpers exceed Federal impact requirements. • **Child Security Rear-Door Locks** — manually lock to prevent a child from opening rear doors from the inside (Sedan models only).

Performance

• **2.2 Liter 4-Cylinder Engine with Multi-Port Fuel Injection** — standard for Cavalier Sedan, Cavalier Coupe and LS Sedan. This smooth, responsive engine delivers an impressive 120 hp at 5200 rpm. Platinum-tipped spark plugs are designed to last up to 100,000 miles. A 5-speed manual transmission is standard (3-speed automatic is standard on the LS Sedan). • **2.3 Liter Quad 4** — this high-performance 16-valve engine is standard on Z24 Coupe and LS Convertible. A 5-speed manual transmission is standard and an electronically controlled 4-speed automatic is optional. • **Standard Power Steering** — power rack-and-pinion steering makes in-city parking and maneuvering easier.

Appearance

• **All-New Exterior Appearance** — the 1995 Cavalier features an all-new design, inside and out. • **New Fascia Features Molded-In Gray Color (Base Models)** — for improved durability. • **Base-Coat/Clear-Coat Paint** — resists fading and provides a high-gloss shine for long-lasting exterior beauty and reduces the severity of water-spotting and etching from acid rain. • **Composite Halogen Headlamps** — combine aerodynamic styling, a high level of illumination and easy servicing. • **Bolt-On Full Wheel Covers** — attractive design is bolted on to reduce chance of loss or theft.

Comfort & convenience

• **Air Conditioning with CFC-Free Refrigerant** — quickly cools interior for maximum occupant comfort. Coolant contains no ozone-depleting CFCs. • **Theatre Dimming of Interior Lights** — fades lights slowly when doors are closed (standard on LS and Z24 Coupe). • **Zoned Rear-Window Defogger** — provides faster warmup in critical areas of windows. • **Smart Battery-Rundown Protection** — has rundown protection to help prevent a dead battery. • **Cloth Reclining Front Bucket Seats** — combine support and comfort with a reclining feature. • **Intermittent Wipers** — allow driver to match wiper speed to weather conditions. • **Full-Folding Rear Seats** — provide additional cargo-carrying flexibility. • **Flip-Up Center Armrest with Storage** — adds comfort and convenience.

Easy-to-own

• **Scotchgard™ Fabric Protector** — on seats and door panels, resists stains and makes cleanup easy. • **Aluminized Stainless-Steel Exhaust System** — includes all pipes, catalytic converter and muffler to resist corrosion. • **Low-Oil-Level Indicator** — warns driver of low-oil level to prevent engine damage. • **Breakaway Outside Mirrors** — reduces the chance of damage. • **Genuine Customer Care** — a no-deductible, 3-year/36,000-mile limited warranty, 24-hour roadside assistance via toll-free hot line, and courtesy transportation if your vehicle ever needs warranty work (at participating dealers).

BLUE: • New Feature

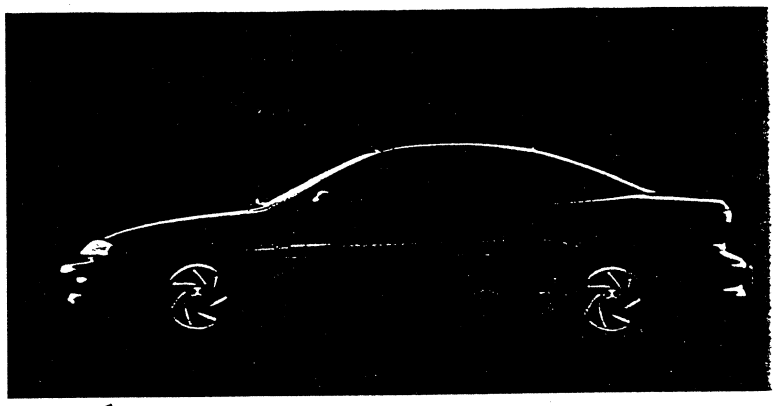

FEATURE VEHICLE

for 1995 is Cavalier Coupe with Appearance Package W27 (detailed on the following sheet).

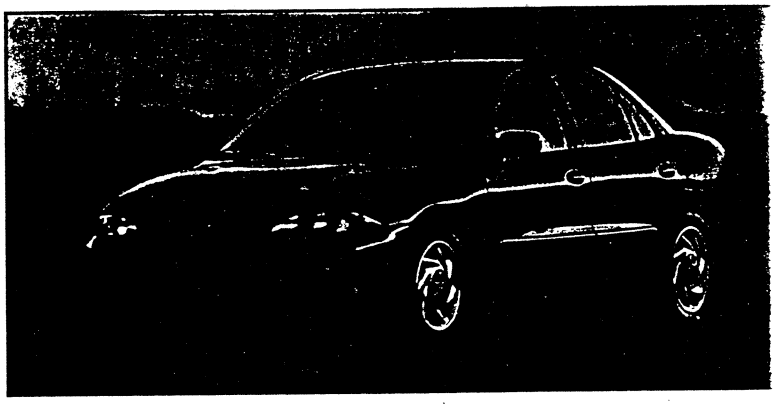

FEATURE VEHICLE

for 1995 is Cavalier LS Sedan (detailed on the following sheet).

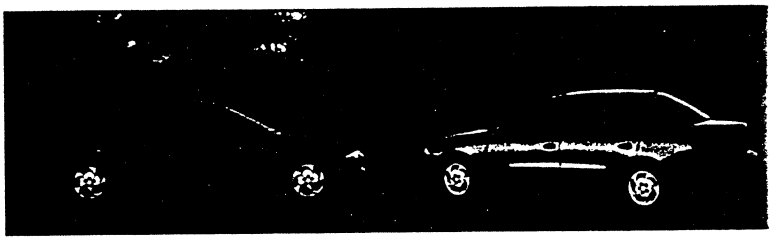

FOCUS VEHICLE

for 1995 is Cavalier Coupe. It offers an array of safety and convenience features in an affordable, sporty package. Equipped with PEG 1 (1SBX), this model represents the best opportunity for high-volume Cavalier Coupe sales at your dealership.

FOCUS VEHICLE

for 1995 is Cavalier Sedan. It's ideal for first-time buyers who are looking for safety, comfort and value in a sedan. Equipped with PEG 1 (1SFX), this model represents the best opportunity for high-volume Cavalier Sedan sales at your dealership.

'95 CAVALIER

TRIM COLOR/SEAT STYLE AVAILABILITY

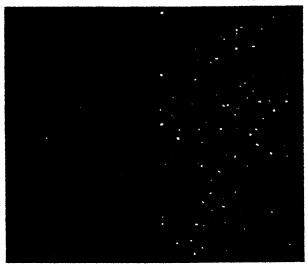

Sport Cloth available in Medium Blue, Graphite, Medium Gray and Neutral.

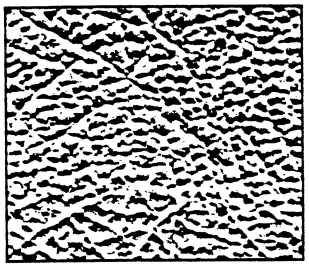

Vinyl available in Arctic White.

WHEELS

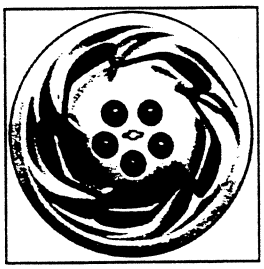

Cavalier standard 14" bolt-on full wheel cover.

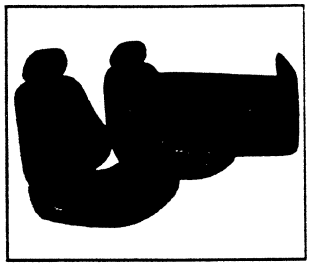

Sport Cloth reclining bucket seats (Sedan and Coupe).

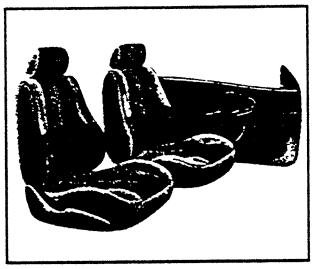

Sport Cloth reclining bucket seats (Z24 Coupe only).

CORRECT PRODUCT REFERENCE NOT AVAILABLE AT TIME OF PRINTING

Vinyl reclining bucket seats (LS Convertible only).

Cavalier LS standard 15" bolt-on full wheel cover.

MOST POPULAR EXTERIOR COLORS BY PERCENTAGE

Clockwise below are the forecasted six most popular Cavalier colors for 1995, based on national sales volume. They are listed for reference only. To identify the top-selling colors in your area, by model, use the Retail Sales Analysis (RSA).

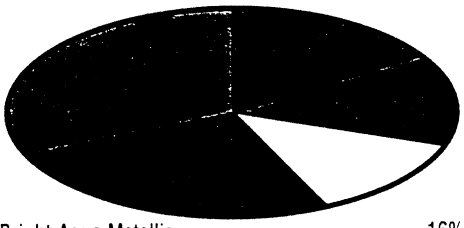

Bright Aqua Metallic ---------- 16%
Bright Red ---------- 13%
Bright White ---------- 12%
Cayenne Red Metallic ---------- 11%
Hawaiian Orchid Metallic ---------- 10%
Black ---------- 7%
Other colors ---------- 31%

MOST POPULAR EXTERIOR COLORS WITH CORRESPONDING INTERIOR COLOR AVAILABILITY

	Interior Material Colors			
	Medium Blue	Graphite	Medium Gray	Neutral
Exterior Colors				
Bright Aqua Metallic		●	●	●
Bright Red		●	●	●
Bright White	●	●	●	●
Cayenne Red Metallic		●	●	●
Hawaiian Orchid Metallic		●	●	●
Black		●	●	●

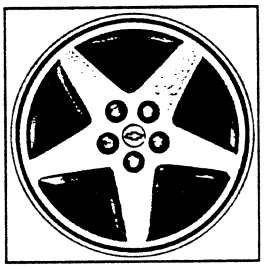

Cavalier Z24 standard 16" aluminum wheel.*

* Start of production 2/95.

NEW FOR 1995

- ALL-NEW INTERIOR AND EXTERIOR
- STANDARD DRIVER- AND PASSENGER-SIDE AIR BAGS
- LONGER WHEELBASE AND WIDER TRACK

'95 CAVALIER

FEATURE VEHICLE CAVALIER COUPE WITH APPEARANCE PACKAGE W27

Feature vehicle for 1995 is the Cavalier Coupe with Appearance Package W27. Its body-color fascias and body-side moldings give this Cavalier a handsome, sporty look.

Standard features Include:

- 2.2 Liter, 4-Cylinder Engine with Multi-Port Fuel Injection
- 3-Speed Automatic Transmission
- Driver- and Passenger-Side Air Bags
- Four-Wheel Anti-Lock Brakes
- Exterior Appearance Package W27 includes Body-Color Fascias and Body-Side Moldings, 15" Bolt-On Full Wheel Covers and P195/65R-15 Touring Tires.

FEATURE VEHICLE CAVALIER LS SEDAN

Feature vehicle for 1995 is the Cavalier LS Sedan. It offers a mixture of practicality and comfort, making it a perfect choice for young families. Standard features include:

- Driver- and Passenger-Side Air Bags
- Four-Wheel Anti-Lock Brakes
- Two-Side-Galvanized Steel on all body panels (except roof)
- Fold-Down Rear Seat
- More Interior Room than 1994
- Child Security Rear-Door Locks
- Air Conditioning with CFC-Free Refrigerant
- Body-Side Moldings, Color-Keyed.

FOCUS VEHICLE CAVALIER COUPE

Ordering Recommendations:
The recommended Cavalier Coupe content, based on national sales volume, is listed below to assist your dealership in ordering.

Coupe with Preferred Equipment Group 1 (1SBX) includes:

- 3-Speed Automatic Transmission
- Charcoal Body-Side Moldings
- Air Conditioning with CFC-Free Refrigerant
- AM/FM Stereo with Cassette Tape Player
- Front and Rear Carpeted Floor Mats
- Dual Covered Visor Mirrors with Map Straps
- Easy-Entry Passenger Seat
- Remote Mechanical Trunk Opener
- Intermittent Variable Wipers
- Front Mud Guards.

FOCUS VEHICLE CAVALIER SEDAN

Ordering Recommendations:
The recommended Cavalier Sedan content, based on national sales volume, is listed below to assist your dealership in ordering.

Coupe with Preferred Equipment Group 1 (1SFX) includes:

- 3-Speed Automatic Transmission
- Charcoal Body-Side Moldings
- Air Conditioning with CFC-Free Refrigerant
- AM/FM Stereo with Cassette Tape Player
- Front and Rear Carpeted Floor Mats
- Dual Covered Visor Mirrors with Map Straps
- Easy-Entry Passenger Seat
- Remote Mechanical Trunk Release
- Intermittent Wipers.

NOTE: Model, PEG and optional content may vary in your locality. Use the Retail Sales Analysis (RSA) to verify or select your dealership's Cavalier Focus vehicle content.

'95 PRODUCT POSITIONING

Cavalier is positioned as a model line that offers a wide variety for customers looking for roominess and convenience at a moderate price. For first-time buyers, the Cavalier Coupe offers excellent value. For buyers who demand a more sporty appearance with a higher equipment level, the Cavalier Z24 Coupe is a favorite choice. Families who want four-door convenience will find the Cavalier LS Sedan an impressive value.

COMPETITIVE VEHICLES

- Main competitors for Cavalier Coupe and Sedan include:
  Ford Escort
  Dodge/Plymouth Neon
  Honda Civic
  Toyota Corolla.
- Chief competitors for Cavalier Z24 Coupe include:
  Ford Escort GT
  Plymouth Laser
  Ford Probe.

BUYER DEMOGRAPHICS

Cavalier:

Median age of Coupe buyers is 30 years. Sedan 43.

Household income of $40,000.

70% of Coupe buyers are female, 65% Sedan.

High school education and some college.

- Coupe buyers tend to be young and are often first-time buyers.
- Sedan buyers are older and more likely to be married.
- Z24 buyers are young and slightly more affluent.
- Cavalier Convertible buyers are older (median age of 42) and more affluent (median income of $65,000).

'95 CAVALIER

FEATURE AVAILABILITY

	Cavalier Coupe	Cavalier Sedan	LS Sedan	LS Convertible*	Z24 Coupe*
2.2L MFI L4	S	S	S	N/A	N/A
2.3L DOHC L4	N/A	N/A	N/A	S	S
5-Speed Manual Transmission	S	S	N/A	S	S
3-Speed Automatic Transmission	O	O	S	N/A	N/A
4-Speed Automatic Transmission	N/A	N/A	N/A	O	O
P195/70R-14 Blackwall Tires	S	S	N/A	N/A	N/A
P195/65R-15 Blackwall Tires	N/A	N/A	S	S	N/A
P205/55R-16 Performance Tires	N/A	N/A	N/A	N/A	S
Driver- and Passenger-Side Air Bags	S	S	S	S	S
4-Wheel Anti-Lock Brakes	S	S	S	S	S
Base-Coat/Clear-Coat Paint	S	S	S	S	S
Brake/Transmission Shift Interlock (automatic transmission only)	S	S	S	S	S
Deck-Lid Spoiler	N/A	N/A	N/A	S	S
Electronic Speed Control	O	O	O	O	O
14" Bolt-On Full Wheel Covers	S	S	N/A	N/A	N/A
15" Bolt-On Full Wheel Covers	O	N/A	S	S	N/A
16" Aluminum Wheels	N/A	N/A	N/A	N/A	S
Stainless-Steel Exhaust System	S	S	S	S	S
Body-Side Moldings	O	O	S	S	S
Power Rack-and-Pinion Steering	S	S	S	S	S
Air Conditioning with CFC-Free Refrigerant	O	O	S	S	S
PassLock™ Theft-Deterrent System	N/A	N/A	N/A	N/A	S
Rear-Window Defogger	O	O	O	O	O
Full-Folding Rear Seat	S	S	S	S	S
Power Windows	N/A	N/A	O	O	O
Power Door Locks	O	O	O	O	O
Power Sunroof	O	N/A	N/A	N/A	O
Remote Mechanical Trunk Release	O	O	S	S	S
Intermittent Wipers, Fixed	S	S	S	S	S
Intermittent Wipers, Variable	O	O	O	O	O
Low-Oil-Level Indicator	S	S	S	S	S
Scotchgard™ Fabric Protector	S	S	S	S	S

S–Standard. O–Optional. N/A–Not available. *Interim availability of these models. Start of production 2/95.
1—Available in Z24 with 4-speed automatic transmission only.

ADDITIONAL INFORMATION ON SIGNIFICANT FEATURES

- Every model of Cavalier features 4-wheel anti-lock brakes (ABS) as standard equipment. ABS improves the driver's ability to maintain steering control during hard braking and helps to provide shorter stopping distances in many circumstances.

- Driver- and passenger-side air bags are standard in every Cavalier, helping to reduce the chance of injury in certain moderate to severe frontal collisions. Always wear safety belts, even with air bags.

- The Cavalier has an all-new exterior appearance with improved body structure that provides improved ride and handling. Structural rigidity is improved as well, providing a smooth and quiet ride. Its new body structure is also designed to provide a safety cage for the occupants to help protect them from injury in the event of a collision.

(Continued next column→)

- Chevrolet has added a new "smart cluster" to the Cavalier instrument panel, with user-friendly LED displays and an easy-to-read electronic PRNDL indicator.

- Theatre dimming fades interior lights slowly and evenly when the doors are closed.

- Cavalier has new Smart Battery-Rundown Protection, helping to prevent a dead battery due to interior lights being inadvertently left on.

- The rear-window defogger on the Cavalier is now "zoned," allowing different amperage to be delivered to different areas of the rear-window-defogger grid. The result is faster defogging of critical areas of the rear window.

- Cavalier Z24 now features as standard equipment PassLock™ Theft-Deterrent System, a completely passive device that requires no special key. PassLock reads the timing of ignition circuits and compares it to a measurement circuit in the steering column. The values must match to enable the engine to start.

DELETIONS

- Maui Blue Metallic, Autumn Maple and Medium Quasar Blue Metallic have been replaced with Light Adriatic Blue Metallic, Raspberry Metallic and Cayenne Red Metallic.

Cavalier, Chevrolet and the Chevrolet Emblem are registered trademarks and Chevy is a trademark of the General Motors Corporation. Scotchgard is a trademark of the 3M Corp. PassLock is a trademark of the Delco Electronics Corp. © 1994 General Motors Corporation. All rights reserved.

CAVALIER

Prices Shown Are Manufacturer's Suggested Retail Prices (MSRP) At The Time Of Publication. These Prices Are To Be Used Only As An Aid To Inventory Management Since MSRP Figures Change Periodically. The Vehicle Price Schedule Is The Official Pricing Documentation Of Chevrolet Motor Division And Should Be Used In Discussing Vehicle Prices With Potential Buyers. The Model Prices Shown In The Order Guide Include The Destination Freight Charges.

EQUIPMENT SUMMARY

STANDARD INTERIOR FEATURES

		1JC37/ 1JC69	1JF69	1JF37	1JF67
AIR CONDITIONING:		--	S	S	S
CARGO NET:	LUGGAGE AREA	--	S	S	S
CUPHOLDER:		S	S	S	S
DEFOGGERS:	SIDE WINDOWS	S	S	S	S
GAGES:	TACHOMETER AND TRIP ODOMETER	--	S	S	S
GLASS:	TINTED	S	S	S	S
LIGHTING:	COURTESY LAMPS, DOME, GLOVE BOX, TRUNK AND REAR COMPARTMENT	S	S	S	S
	DUAL HEADLINER MOUNTED READING LAMP	--	S	S	--
	MIRROR MOUNTED DUAL READING LAMPS	--	--	--	S
RADIO:	ELECTRONICALLY TUNED AM/FM STEREO RADIO W/SEEK-SCAN, DIGITAL CLOCK AND EXTENDED RANGE FRONT AND REAR SPEAKERS	--	S	--	S
	ELECTRONICALLY TUNED AM/FM STEREO RADIO W/SEEK-SCAN, W/STEREO CASSETTE TAPE DIGITAL CLOCK AND EXTENDED RANGE FRONT AND REAR SPEAKERS	--	--	S	--
RESTRAINT SYSTEM:	DRIVER AND PASSENGER SIDE AIR BAGS	S	S	S	S
SAFETY BELTS:	REAR COMFORT GUIDE, CHILD REAR SEAT	S	S	S	S
SCOTCHGARD:	FABRIC PROTECTOR, INCLUDES SEATS AND DOOR TRIM	S	S	S	S
STEERING WHEEL:	TILT	--	--	S	--
TRUNK RELEASE:	MECHANICAL OPENER	--	S	S	S
WARNING LIGHT:	LOW OIL LEVEL	S	S	S	S
WIPERS:	INTERMITTENT, FIXED DELAY	S	S	S	S

STANDARD EXTERIOR FEATURES

INSULATOR PAD:	ENGINE COMPARTMENT AND UNDER HOOD	S	S	S	S
PAINT:	BASE COAT/CLEAR COAT	S	S	S	S
TIRES:	P195/70R-14 B/W	S	--	--	--
	P195/65R-15 B/W	--	S	--	S
	P205/55R-16 B/W	--	--	S	--
TRUNK TRIM :	DELUXE	S	S	S	S

STANDARD CHASSIS FEATURES

BATTERY:	RUNDOWN PROTECTION	S	S	S	S
BRAKES:	4-WHEEL ANTI-LOCK	S	S	S	S
ENGINE:	2.2 LITER MFI L4	S	S	--	S
	2.3 LITER MFI L4	--	--	S	--
EXHAUST SYSTEM:	STAINLESS STEEL	S	S	S	S
FUEL TANK:	15.2 GALLON CAPACITY	S	S	S	S
STEERING:	POWER RACK AND PINION	S	S	S	S
TRANSMISSION:	3-SPEED AUTOMATIC	--	S	--	S
	5-SPEED MANUAL	S	--	S	--

Prices Shown Are Manufacturer's Suggested Retail Prices (MSRP) At The Time Of Publication. These Prices Are To Be Used Only As An Aid To Inventory Management Since MSRP Figures Change Periodically. The Vehicle Price Schedule Is The Official Pricing Documentation Of Chevrolet Motor Division And Should Be Used In Discussing Vehicle Prices With Potential Buyers. The Model Prices Shown In The Order Guide Include The Destination Freight Charges.

TRIM DEFINITION & OPTION SUMMARY

INTERIOR TRIM

		1JC37/ 1JC69	1JF69	1JF37	1JF67
CONSOLE:	WITH INTEGRAL ARMREST AND STORAGE	S	S	S	S
FLOOR COVERING:	CARPETING, PASSENGER FLOOR	S	S	S	S
	FLOOR MATS	--	S	S	S
MIRRORS:	REARVIEW, DAY/NIGHT INSIDE	S	S	S	S
	DUAL COVERED VISOR MIRRORS W/MAP STRAPS	--	S	S	S
SEAT:	REAR FULL FOLDING	S	S	S	S
SEATING:	CLOTH RECLINING FRONT BUCKET SEATS WITH ADJUSTABLE HEAD RESTS	S	S	S	S
	EASY ENTRY PASSENGER SEAT	--	--	S	S

EXTERIOR TRIM

BUMPERS:	5 MPH	S	S	S	S
FASCIAS:	BODY COLORED	--	S	S	S
HEADLAMPS:	COMPOSITE HALOGEN	S	S	S	S
LAMPS:	FOG	--	--	S	--
MIRRORS:	BREAKAWAY, SPORT LH REMOTE AND RH MANUAL	S	S	S	S
MOLDINGS:	BODY SIDE, COLOR-KEYED	--	S	S	S
MUD GUARDS:	FRONT	--	S	--	--
SPOILER:	REAR DECK	--	--	S	S
WHEEL COVERS:	14" BOLT-ON FULL WHEEL COVERS	S	--	--	--
	15" BOLT-ON FULL WHEEL COVERS	--	S	--	S
	16" CAST ALUMINUM WHEEL	--	--	S	--

Prices Shown Are Manufacturer's Suggested Retail Prices (MSRP) At The Time Of Publication. These Prices Are To Be Used Only As An Aid To Inventory Management Since MSRP Figures Change Periodically. The Vehicle Price Schedule Is The Official Pricing Documentation Of Chevrolet Motor Division And Should Be Used In Discussing Vehicle Prices With Potential Buyers. The Model Prices Shown In The Order Guide Include The Destination Freight Charges.

Model 1JC37 Cavalier Coupe

*Includes Destination and Handling Charge

MUST SPECIFY: EMISSIONS, ENGINE, TRANSMISSION
MUST ORDER ONE GROUP -- NO DELETIONS ALLOWED

	1SA	1SB	1SC
Base Equipment Group (Refer Standard Equipment Summary)	x	x	x
Preferred Equipment Group 1			
Bodyside Moldings, Charcoal		x	x
Floor Covering: Carpeted Mats, Color-Keyed Front and Rear		x	x
Mirrors, Dual Covered Visor with Map Straps		x	x
Mud Guards, Front		x	x
Seat, Easy Entry Passenger		x	x
Trunk Opener, Mechanical		x	x
Windshield Wiper System, Intermittent Variable		x	x
Preferred Equipment Group 2			
Speed Control: Electronic, with Resume Speed			x
Steering,Tilt Wheel, Adjustable Steering column			x

ADDITIONAL OPTIONS

ACKNOWLEDGEMENTS

R8S Multiple Order Numbers
R8T Preliminary Invoice
W27 **APPEARANCE PACKAGE:** Exterior (Incls Body Color Fascias and Side Moldings, 15" Bolt-on Wheel Covers, and P195/65R15 BW Touring Tires) (Reqs Group 1SB or 1SC)
VK3 **BRACKET** License Plate,Front

CLIMATE CONTROL

C60 Air Conditioning
K05 Heater, Engine Block

(Note: One of the Following Defogger Options must be Specified)

C49 Defogger, Rear Window: Electric
R9W Defogger, Rear Window not Desired
AU3 **DOOR LOCKS:** Power

EMISSIONS (Refer Emission Requirement Tab Section)

FE9 Federal Emission Requirement
NG1 Massachusetts Emission Requirement
YF5 California Emission Requirement
NB8 California/MA Emission Override (Reqs FE9 Emission)
NC7 Federal Emission Override (Reqs YF5/NG1 Emission)
LN2 **ENGINE:** 2.2 Liter MFI L4

RADIO EQUIPMENT

(Note: One of the Following Radio Options Must Be Specified)

UM7 Electronically Tuned AM/FM Stereo Radio w/Seek-Scan, Digital Clock, Extended Range Front and Rear Speakers
UM6 Electronically Tuned AM/FM Stereo Radio w/Seek-Scan, Digital Clock, Stereo Cassette Tape and Extended Range Front and Rear Speakers
U1C Electronically Tuned AM/FM Stereo Radio w/Seek-Scan, Digital Clock, Compact Disc Player, Delco-Loc II and Extended Range Front and Rear Speakers
UL5 Radio Delete (Base) (Speakers and Antenna not Included)
AR9 **SEAT:** Bucket
CF5 **SUNROOF:** Electric (Reqs Group 1SB or 1SC)

TRANSMISSIONS

MM5 5-Speed Manual (Base)
MX1 3-Speed Automatic

Prices Shown Are Manufacturer's Suggested Retail Prices (MSRP) At The Time Of Publication. These Prices Are To Be Used Only As An Aid To Inventory Management Since MSRP Figures Change Periodically. The Vehicle Price Schedule Is The Official Pricing Documentation Of Chevrolet Motor Division And Should Be Used In Discussing Vehicle Prices With Potential Buyers. The Model Prices Shown In The Order Guide Include The Destination Freight Charges.

COLOR AND TRIM SELECTION

PLEASE NOTE: The Exterior Paint and Interior Trim Combinations Shown Below are the Only Combinations that are Available.

Interior Trim Color			Graphite	Med Blue	Med Gray	Neutral
MODEL	SEAT TYPE	SEAT OPTION*				
1JC37	Sport Cloth Bucket	AR9	12E	30E	14E	52E

*** Seat Option AR9 Must Be Specified**

SOLID PAINT APPLICATION

Exterior Paint Color	Color Code	Graphite	Med Blue	Med Gray	Neutral
Aqua, Bright (Met)	43U	x		x	x
Autumnwood, Lt (Met)	55U	x			x
Black	41U	x		x	x
Blue, Lt Adriatic (Met)	36U	x	x	x	
Blue, Med Bright (Met)	26U	x		x	
Orchid, Hawaiian (Met)	84U	x		x	x
Raspberry (Met)	98U	x		x	x
Red, Bright	81U	x		x	x
Red, Cayenne (Met)	96U	x		x	x
White, Bright	16U	x	x	x	x

POWER TEAMS

ENGINE OPTION CONDITION		FINAL DRIVE RATIO	
		3.18	3.58
LN2	MM5	----	Std
	MX1	Std	----

Prices Shown Are Manufacturer's Suggested Retail Prices (MSRP) At The Time Of Publication. These Prices Are To Be Used Only As An Aid To Inventory Management Since MSRP Figures Change Periodically. The Vehicle Price Schedule Is The Official Pricing Documentation Of Chevrolet Motor Division And Should Be Used In Discussing Vehicle Prices With Potential Buyers. The Model Prices Shown In The Order Guide Include The Destination Freight Charges.

Model 1JC69 SEDAN

*Includes Destination and Handling Charge

MUST SPECIFY: EMISSION, ENGINE, TRANSMISSION
MUST ORDER ONE GROUP -- NO DELETIONS ALLOWED

	1SD	1SF	1SG
Base Preferred Equipment Group (Refer Standard Equipment Summary)	x	x	x
Preferred Equipment Group 1			
Floor Covering: Carpeted Mats, Color-Keyed Front and Rear		x	x
Mirrors: Dual, Covered Visor w/ Map Straps		x	x
Moldings: Bodyside, Charcoal		x	x
Mud Guards, Front		x	x
Trunk Opener, Mechanical		x	x
Windshield Wiper System, Intermittent, Variable		x	x
Preferred Equipment Group 2			
Speed Control: Electronic, with Resume Speed			x
Steering, Tilt Wheel, Adjustable Steering Column			x

ADDITIONAL OPTIONS

ACKNOWLEDGEMENTS
R8S Multiple Order Numbers
R8T Preliminary Invoice
VK3 **BRACKET:** License Plate, Front
CLIMATE CONTROL
C60 Air Conditioning
K05 Heater, Engine Block
(Note: One of the Following DefoggerOptions Must Be Specified)
C49 Defogger, Rear Window: Electric
R9W Defogger, Rear Window Not Desired
AU3 **DOOR LOCKS:** Power
EMISSIONS: (Refer Emission Requirement Tab Section)
FE9 Federal Emission Requirement
NG1 Massachusetts Emission Requirement
YF5 California Emission Requirement
NB8 California/MA Override (Reqs FE9 Emissions)
NC7 Federal Emission Override (Reqs YF5/NG1 Emissions)
LN2 **ENGINE:** 2.2 Liter MFI L4 (Base)

RADIO EQUIPMENT
(Note: One of the Following Radio Options Must Be Specified)
UM7 Electronically Tuned AM/FM Stereo Radio w/Seek-Scan, Digital Clock, Extended Range Front and Rear Speakers
UM6 Electronically Tuned AM/FM Stereo Radio w/Seek-Scan, Digital Clock, Stereo Cassette Tape, Extended Range Front and Rear Speakers
U1C Electronically Tuned AM/FM Stereo Radio w/Seek-Scan, Digital Clock, Compact Disc Player, Delco-Loc II and Extended Front and Rear Speakers
UL5 Radio Delete (Base) (Speakers and Antenna Not Included)
AR9 **SEAT:** Bucket
TRANSMISSION
MM5 5-Speed Manual (Base)
MX1 3-Speed Automatic

Prices Shown Are Manufacturer's Suggested Retail Prices (MSRP) At The Time Of Publication. These Prices Are To Be Used Only As An Aid To Inventory Management Since MSRP Figures Change Periodically. The Vehicle Price Schedule Is The Official Pricing Documentation Of Chevrolet Motor Division And Should Be Used In Discussing Vehicle Prices With Potential Buyers. The Model Prices Shown In The Order Guide Include The Destination Freight Charges.

COLOR AND TRIM SELECTION

Interior Trim Color			Graphite	Med Blue	Med Gray	Neutral
MODEL	SEAT TYPE	SEAT OPTION*				
1JC69	Sport Cloth Bucket	AR9	12E	30E	14E	52E

*** Seat Option AR9 Must Be Specified**

SOLID PAINT APPLICATION

Exterior Paint Color	Color Code	Graphite	Med Blue	Med Gray	Neutral
Aqua, Bright (Met)	43U	x		x	x
Autumnwood, Lt (Met)	55U	x			x
Black	41U	x		x	x
Blue, Lt Adriatic (Met)	36U	x	x	x	
Blue, Med Bright (Met)	26U	x		x	
Orchid, Hawaiian (Met)	84U	x		x	x
Raspberry (Met)	98U	x		x	x
Red, Bright	81U	x		x	x
Red, Cayenne (Met)	96U	x		x	x
White, Bright	16U	x	x	x	x

POWER TEAMS

ENGINE OPTION CONDITION		FINAL DRIVE RATIO	
		3.18	3.58
LN2	MM5	----	Std
	MX1	Std	----

Prices Shown Are Manufacturer's Suggested Retail Prices (MSRP) At The Time Of Publication. These Prices Are To Be Used Only As An Aid To Inventory Management Since MSRP Figures Change Periodically. The Vehicle Price Schedule Is The Official Pricing Documentation Of Chevrolet Motor Division And Should Be Used In Discussing Vehicle Prices With Potential Buyers. The Model Prices Shown In The Order Guide Include The Destination Freight Charges.

Model 1JF69 Cavalier LS Sedan

*Includes Destination and Handling Charge

MUST SPECIFY: EMISSION, ENGINE, TRANSMISSION
MUST ORDER ONE GROUP -- NO DELETIONS ALLOWED

	1SH	1SJ	1SK
Base Preferred Equipment (Refer Standard Equipment Summary)	x	x	x
Preferred Equipment Group 1		x	x
Tiltwheel Adjustable Steering Column		x	x
Speed Control: Electronic, with Resume Speed		x	x
Windshield Wiper System, Intermittent, Variable			
Preferred Equipment Group 2			x
Mirrors: Twin Remote Electric			x
Power Door Locks			x
Power Windows, Driver's Express Down			

ADDITIONAL OPTIONS

ACKNOWLEDGEMENTS
R8S Multiple Order Numbers
R8T Preliminary Invoice
VK3 **BRACKET:** License Plate, Front
CLIMATE CONTROL
K05 Heater, Engine Block
(Note: One of the Following Defogger Options must be Specified)
C49 Defogger, Rear Window: Electric
R9W Defogger, Rear Window not Desired
AU3 **DOOR LOCKS:** Power
EMISSION: (Refer Emission Requirement Tab Section)
FE9 Federal Emission Requirement
NG1 Massachusetts Emission Requirement
YF5 California Emission Requirement
NB8 California/MA Emission Override (Reqs FE9 Emissions)
NC7 Federal Emission Override (Reqs YF5/NG1 Emission)

LN2 **ENGINE:** 2.2 Liter MFI L4
RADIO EQUIPMENT
UM6 Electronically Tuned AM/FM Stereo Radio w/Seek-Scan, Digital Clock, Stereo Cassette Tape and Extended Front and Rear Speakers
U1C Electronically Tuned AM /FM Stereo Radio w/Seek-Scan, Digital Clock, Compact Disc Player, Delco-Loc II , Extended Range Front and Rear Speakers
AR9 **SEAT:** Bucket
MX1 **TRANSMISSION:** 3-Speed Automatic (Base)
PF7 **WHEEL:** 15" Aluminum

Prices Shown Are Manufacturer's Suggested Retail Prices (MSRP) At The Time Of Publication. These Prices Are To Be Used Only As An Aid To Inventory Management Since MSRP Figures Change Periodically. The Vehicle Price Schedule Is The Official Pricing Documentation Of Chevrolet Motor Division And Should Be Used In Discussing Vehicle Prices With Potential Buyers. The Model Prices Shown In The Order Guide Include The Destination Freight Charges.

COLOR AND TRIM SELECTION

Interior Trim Color			Graphite	Med Blue	Med Gray	Neutral
MODEL	SEAT TYPE	SEAT OPTION*				
1JF69	Sport Cloth Bucket	AR9	12C	30C	14C	52C

* Seat Option AR9 Must Be Specified

SOLID PAINT APPLICATION

Exterior Paint Color	Color Code	Graphite	Med Blue	Med Gray	Neutral
Aqua, Bright (Met)	43U	x		x	x
Autumnwood, Lt (Met)	55U	x			x
Black	41U	x		x	x
Blue, Lt Adriatic (Met)	36U	x	x	x	
Blue, Med Bright (Met)	26U	x		x	
Orchid, Hawaiian (Met)	84U	x		x	x
Raspberry (Met)	98U	x		x	x
Red, Bright	81U	x		x	x
Red, Cayenne (Met)	96U	x		x	x
White, Bright	16U	x	x	x	x

POWER TEAMS

ENGINE OPTION CONDITION	FINAL DRIVE RATIO
	3.18
LN2 MX1	Std

Prices Shown Are Manufacturer's Suggested Retail Prices (MSRP) At The Time Of Publication. These Prices Are To Be Used Only As An Aid To Inventory Management Since MSRP Figures Change Periodically. The Vehicle Price Schedule Is The Official Pricing Documentation Of Chevrolet Motor Division And Should Be Used In Discussing Vehicle Prices With Potential Buyers. The Model Prices Shown In The Order Guide Include The Destination Freight Charges.

MODEL 1JF37 COUPE

*Includes Destination and Handling Charge

MUST SPECIFY: EMISSIONS, ENGINE, TIRES, TRANSMISSION

MUST ORDER ONE GROUP -- NO DELETIONS ALLOWED

	1SP	1SQ	1SR
Base Preferred Equipment Group			
(Refer Std Equipment Summary)	x	x	x
Preferred Equipment Group 1			
Speed Control: Electronic, with Resume Speed		x	x
Windshield Wiper System, Intermittent Variable		x	x
Preferred Equipment Group 2			
Mirrors: Twin Remote, Electric			x
Power Door Locks			x
Power Windows with Driver's Express Down			x

ADDITIONAL OPTIONS

ACKNOWLEDGEMENTS

R8S Multiple Order Numbers
R8T Preliminary Invoice
VK3 **BRACKET:** License Plate, Front

CLIMATE CONTROL

K05 Heater, Engine Block

(NOTE: One of the Following Options Must Be Specified)

C49 Defogger, Rear Window, Electric
R9W Defogger, Rear Window Not Desired
AU3 **DOOR LOCKS:** Power

EMISSIONS(Refer Emission Requirement Tab Section)

FE9 Federal Emission Requirement
NG1 Massachusetts Emission Requirement
YF5 California Emission Requirement
NB8 California/MA Emission Override (Reqs FE9 Emission)
NC7 Federal Emission Override (Reqs YF5/NG1 Emission)
LD2 **ENGINE:** 2.3 Liter MFI L4 DOHC

RADIO EQUIPMENT

U1C Electronically Tuned AM/FM Stereo Radio w/Seek-Scan, Digital Clock, Compact Disc Player, Delco-Loc II, Extended Range Front and Rear Speakers
AR9 **SEAT TRIM:** Cloth Bucket
CF5 **SUN ROOF:** Electric (Reqs 1SQ or 1SR)
QLG **TIRES:** P205/55 R16 B/W (Base)

TRANSMISSION

MM5 5-Speed Manual (Base)
MX0 4-Speed Automatic

Prices Shown Are Manufacturer's Suggested Retail Prices (MSRP) At The Time Of Publication. These Prices Are To Be Used Only As An Aid To Inventory Management Since MSRP Figures Change Periodically. The Vehicle Price Schedule Is The Official Pricing Documentation Of Chevrolet Motor Division And Should Be Used In Discussing Vehicle Prices With Potential Buyers. The Model Prices Shown In The Order Guide Include The Destination Freight Charges.

COLOR AND TRIM SELECTION

PLEASE NOTE: The Exterior Paint and Interior Trim Combinations Shown Below are the Only Combinations that are Available.

Interior Trim Color		Graphite	Med Blue	Med Gray	Neutral
MODEL	SEAT TYPE				
1JF37	Sport Cloth Bucket	12D	30C	14C	52C

SOLID PAINT APPLICATION

Exterior Paint Color	Color Code	Graphite	Med Blue	Med Gray	Neutral
Aqua, Bright (Met)	43U	x		x	x
Black	41U	x		x	x
Blue, Med Bright (Met)	26U	x		x	
Orchid, Hawaiian (Met)	84U	x		x	x
Raspberry (Met)	98U	x		x	x
Red, Bright (Met)	81U	x		x	x
Red, Cayenne (Met)	96U	x		x	x
White, Bright	16U	x	x	x	x

POWER TEAMS

ENGINE OPTION CONDITION		FINAL DRIVE RATIO	
		3.91	3.94
LD2	MM5	----	Std
	MX0	Std	----

Prices Shown Are Manufacturer's Suggested Retail Prices (MSRP) At The Time Of Publication. These Prices Are To Be Used Only As An Aid To Inventory Management Since MSRP Figures Change Periodically. The Vehicle Price Schedule Is The Official Pricing Documentation Of Chevrolet Motor Division And Should Be Used In Discussing Vehicle Prices With Potential Buyers. The Model Prices Shown In The Order Guide Include The Destination Freight Charges.

NOTES

Prices Shown Are Manufacturer's Suggested Retail Prices (MSRP) At The Time Of Publication. These Prices Are To Be Used Only As An Aid To Inventory Management Since MSRP Figures Change Periodically. The Vehicle Price Schedule Is The Official Pricing Documentation Of Chevrolet Motor Division And Should Be Used In Discussing Vehicle Prices With Potential Buyers. The Model Prices Shown In The Order Guide Include The Destination Freight Charges.

MANUFACTURERS MOTOR VEHICLE SPECIFICATIONS

METRIC (U.S. Customary)

1995

Manufacturer	Vehicle Line	
CHEVROLET MOTOR DIVISION GENERAL MOTORS CORPORATION	CAVALIER	
Mailing Address		
30007 VAN DYKE WARREN, MI 48090-9065	Issued SEPTEMBER, 1994	Revised

Direct questions concerning these specifications to the manufacturer listed above.

The information contained herein is prepared, distributed by, and is solely the responsibility of the vehicle manufacturing company to whose products it relates. This specification form was developed by the vehicle manufacturing companies under the auspices of the American Automobile Manufacturers Association.

The General Specifications herein are those in effect at date of compilation and are subject to change without notice or incurring obligation by the manufacturer.

AAMA

American Automobile Manufacturers Association

Blank Forms Provided by Technical Affairs Division

FORM AAMA-95

MVMA Specifications

METRIC (U.S. Customary)

Table of Contents

Ø **Indicates Format Change From Previous Year**

	1	Vehicle Models/Origin
	2	Power Teams
	3	Engine
	4	Lubrication System
	4	Diesel Information
	5	Cooling System
	6	Fuel System
	7	Vehicle Emission Control
Ø	7	Exhaust System
Ø	8-10	Transmission, Axles and Shafts
	11	Suspension
	12-13	Brakes, Tires and Wheels
	14	Steering
	15-16	Electrical
Ø	17	Body - Miscellaneous Information
	17	Frame
	18	Restraint System
	18	Glass
	18	Headlamps
	19	Climate Control System
	20-21	Convenience Equipment
	21	Trailer Towing
	22-24	Vehicle Dimensions
	25	Vehicle Fiducial Marks
	26	Vehicle Mass (weight)
	27	Optional Equipment Differential Mass (Weight)
	28-34	Vehicle Dimensions Definitions - Key Sheets
	35	Index

NOTE:

1. This form uses both SI metric units and U.S.Customary units. The metric unit of measure is presented first, and the U.S.Customary unit follows in parentheses.
2. UNLESS OTHERWISE INDICATED:
   a. Specifications apply to standard models without optional equipment. Significant deviations are noted.
   b. Nominal design dimensions are used throughout these specifications.
   c. All linear dimensions are in millimeters (inches), and all mass (weight) specifications are in kilograms (pounds).
3. The General Specifications herein are those in effect at date of compilation and are subject to change without notice or incurring obligation by the manufacturer.
4. Additional Vehicle Dimensions (based in part on SAE J1100 "Motor Vehicle Dimensions") may be available from the manufacturer.

MVMA Specifications

Vehicle Line: CAVALIER
Model Year: 1995 Issued: 9-94 Revised (•):

METRIC (U.S. Customary)

Vehicle Origin

Design & development (company)	General Motors Corporation, L.A.D. Lansing
Where built (country)	United States
Authorized U.S. sales marketing representative	Chevrolet Motor Divisions

Vehicle Models

Model Description & Drive (FWD / RWD / AWD / 4WD)*	Introduction Date	Make, Vehicle Models, Series, Body Type (Mfgr's Model Code)	No. of Designated Seating Positions (Front / Rear)	Max. Trunk/Cargo Load-Kilograms (Pounds)	EPA Fuel Economy (City/Hwy)
CAVALIER					
2-Door Notchback Coupe (FWD)	9-94	1JC37	2/3	60(132)	22/32
4-Door Notchback Sedan (FWD)	9-94	1JC69	2/3	60(132)	22/32
CAVALIER "Z24"					
2-Door Notchback Coupe (FWD)	9-94	1JF37	2/3	60(132)	22/32
CAVALIER "LS"					
2-Door Convertible (FWD)	9-94	1JF67	2/2	60(132)	22/30
4-Door Notchback Sedan (FWD)	9-94	1JF69	2/3	60(132)	22/30

* FWD - Front Wheel Drive RWD - Rear Wheel Drive AWD - All Wheel Drive 4WD - Four Wheel Drive

MVMA Specifications

Vehicle Line: CAVALIER
Model Year: 1995 Issued: 9-94 Revised (•):

METRIC (U.S. Customary)

Power Teams

SAE J1349 Net bhp (brake horsepower) and Net Torque corrected to 77°F/25°C and 29.61 in. Hg/100 kPa atmospheric pressure.

			A	B	C	D
ENGINE	Engine Code		LN2	LN2	LD2	LD2
	Displacement Liters (in^3)		2.2L (133) L4	2.2L (133) L4	2.3L (138) L4	2.3L (138)
	Induction system (FI, Carb, etc.)		Multi-Port Fuel Injection	Multi-Port Fuel Injection	Multi-Port Fuel Injection	Sequential Fuel Injection
	Compression ratio		9.0:1	9.0:1	9.5:1	9.5:1
	SAE Net at RPM	Power kW (bhp)	90 (120) @5200	90 (120) @ 5200	112 (150) @ 6000	112 (150) @ 6000
		Torque N • m (lb. ft.)	176 (130) @ 4000	176 (130) @ 4000	196 (145) @ 4800	196 (145) @ 4800
	Exhaust single, dual		Single	Single	Single/Dual "Z24"	Single/Dual "Z24"
TRANS	Transmission/ Transaxle		MK7 Manual Transaxle 5-Speed	MD9 Automatic Transaxle 3-Speed	MJ1 Manual Transaxle 5-Speed	MN4 Automatic Transaxle 4 Speed
	Effective Final Drive / Axle Ratio (std. first)		3.58	3.18	3.94	3.91

Series Availability

Model	Code	Power Teams (A - B - C - D) Standard	Optional
CAVALIER			
2-Door Notchback Coupe	1JC37	A	B
4-Door Notchback Sedan	1JC69	A	B
CAVALIER Z24			
2-Door Notchback Coupe	1JF37	C	D
CAVALIER LS			
2-Door Convertible	1JF67	B	C, D
4-Door Notchback Sedan	1JF69	B	D

MVMA Specifications

Vehicle Line CAVALIER
Model Year 1995 Issued 9-94 Revised (•)

METRIC (U.S. Customary)

Engine Description	2.2 LITER L4 (133 CID)
Engine Code	MULTI-PORT FUEL INJECTION RPO LN2

Engine - General

Type & description (inline, V, angle, flat, location, front, mid, rear, transverse, longitudinal, sohc, dohc, ohv, hemi, wedge, pre-chamber, etc.)		Inline Front, Transverse -OHV
Manufacturer		General Motors Powertrain Division
No. of cylinders		4
Bore		89.0 mm (3.50 in.)
Stroke		88.0 mm (3.46 in.)
Bore Spacing (C / L to C / L)		99.0 mm (3.90 in.)
Cylinder block material & mass kg. (lbs.) (machined)		Cast Iron, 42 (93), w/o Caps
Cylinder block deck height		216.65 m (8.53 in.)
Cylinder block length		443 mm (17.44 in.)
Deck clearance (minimum) (above or below block)		.6 mm (.024 in.) Below
Cylinder head material & mass kg. (lbs.)		Aluminum 9.7 kg. (21.3 lbs.)
Cylinder head volume cm³ (inches³)		32.8 (2.00)
Cylinder liner material		No Liner
Head gasket thickness (compressed)		1.50 (.059)
Minimum combustion chamber total volume cm³ (inches³)		67.34 (4.11)
Cyl. no. system (front to rear)*	L. Bank	1-2-3-4
	R. Bank	-
Firing order		1-3-2-4
Intake manifold material & mass kg. (lbs.)**		Aluminum 3.9 kg (8.6 lbs.)
Exhaust manifold material & mass kg. (lbs)**		Cast Iron 4.5 kg (10 lbs.)
Knock sensor (number & location)		One, Right Side Of Block
Fuel required unleaded, diesel, etc.		Unleaded
Fuel antiknock index (R + M) ÷ 2		87
Engine Mounts	Quantity	3-Automatic, 4-Manual
	Material and type (elastomeric, hydroelastic, hydraulic damper, etc.)	(2) Elastomeric (1) Hydrolastic - Automatic (3) Elastomeric (1) Hydrolastic - Manual
	Added isolation (sub-frame, crossmember, etc.	No
Total dressed engine mass (wt) dry***		155.29 kg (342 lbs.) Automatic 164.58 kg (362 lbs.) Manual

Engine - Pistons

Material & mass, g (weight, oz.) - piston only	Aluminum 328 (11.57)

Engine - Camshaft

Location		In Block, Right Side
Material & mass kg (weight, lbs.)		Assembled Steel
Drive type	Chain / belt	Chain
	Width / pitch	19.3 x 9.5 mm (.76 x.37)

* Rear of engine - drive takeoff. View from drive takeoff end to determine left & right side of engine.
** Finished state.
*** Dressed engine mass (weight) includes the following: All those items necessary to make the engine a complete ready-to-run unit.

MVMA Specifications

Vehicle Line CAVALIER
Model Year 1995 Issued 9-94 Revised (•)

METRIC (U.S. Customary)

Engine Description	2.3 LITER L4 (138 CID)
Engine Code	MUTLI-PORT FUEL INJECTION RPO LD2

Engine - General

Type & description (inline, V, angle, flat, location, front, mid, rear, transverse, longitudinal, sohc, dohc, ohv, hemi, wedge, pre-chamber, etc.)		Inline, Front, Transverse, Pent Roof
Manufacturer		General Motors Powertrain Division
No. of cylinders		4
Bore		92 mm (3.62 in.)
Stroke		85 mm (3.35 in.)
Bore Spacing (C / L to C / L)		100mm (3.94in.)
Cylinder block material & mass kg. (lbs.) (machined)		Cast Iron, 43.99 kg (96.98 lbs.)
Cylinder block deck height		222 mm (8.74 in.)
Cylinder block length		499.5 mm (19.66 in.)
Deck clearance (minimum) (above or below block)		0
Cylinder head material & mass kg. (lbs.)		Aluminum 7.68 kg (16.93 lbs.) 5.3 kg (11.7 lbs.)
Cylinder head volume cm³ (inches³)		47.0+/- 1.5 cc
Cylinder liner material		None
Head gasket thickness (compressed)		1.17 - 1.22 (.046 - .048)
Minimum combustion chamber total volume cm³ (inches³)		66.4 (4.05)
Cyl. no. system (front to rear)*	L. Bank	1-2-3-4
	R. Bank	None
Firing order		1-3-4-2
Intake manifold material & mass kg. (lbs.)**		Aluminum 4.94 kg (10.89 lbs.)
Exhaust manifold material & mass kg. (lbs)**		Cast Iron 7.02 kg (15.48 lbs.)
Knock sensor (number & location)		One, Rear Face Of Block
Fuel required unleaded, diesel, etc.		Unleaded
Fuel antiknock index (R + M) ÷ 2		87
Engine Mounts	Quantity	3 Automatic, 4 Manual
	Material and type (elastomeric, hydroelastic, hydraulic damper, etc.)	(2) Elastomeric (1) Hydroelastic - Automatic (3) Elastomeric (1) Hydroelastic - Maunal
	Added isolation (sub-frame, crossmember, etc.)	No
Total dressed engine mass (wt) dry***		193.26 kg. (456.05 lbs.) Automatic 206.35 kg. (454.91 lbs.) Manual

Engine - Pistons

Material & mass, g (weight, oz.) - piston only	Aluminum, .402 (14.18)

Engine - Camshaft

Location		Overhead
Material & mass kg (weight, lbs.)		Cast Iron, 3.045 kg (6.713 lbs.) Intake, 3.045 kg (6.713 lbs.) Exhaust, 2.948 kg (6,499 lbs.)
Drive type	Chain / belt	Chain
	Width / pitch	12.7 mm (0.5 in.) 9.525 (.375)- 130 Pitches

* Rear of engine - drive takeoff. View from drive takeoff end to determine left & right side of engine.
** Finished state.
*** Dressed engine mass (weight) includes the following: All those items necessary to make the engine a complete ready-to-run unit.

MVMA Specifications

Vehicle Line CAVALIER
Model Year 1995 Issued 9-94 Revised (•)

METRIC (U.S. Customary)

Engine Description	2.2 LITER L4 (133 CID)
Engine Code	MULTI-PORT FUEL INJECTION RPO LN2

Engine - Valve System

Hydraulic lifters (std., opt., n.a.)		Standard
Valves	Number intake / exhaust	4/4
	Head O.D. intake / exhaust	44.0 mm (1.73) / 37.0 mm (1.46 in)

Engine - Connecting Rods

Material & mass kg., (weight, lbs.)*	Forged Steel, .540 kg (1.19 lbs.)
Length (axes C/L to C/L)	141.95 mm (5.59 in.)

Engine - Crankshaft

Material & mass kg., (weight, lbs.)*		Nodular Cast Iron, 14.4 kg (31.7 lbs.)
End thrust taken by bearing (no.)		4
Length & number of main bearings		5, 20.72 mm (.82 in.)
Seal (material, one, two piece design, etc.)	Front	One Piece Fluroelastomer
	Rear	One Piece Fluroelastomer

Engine - Lubrication System

Normal oil pressure kPa (psi) at engine rpm	12-20 @ 3000
Type oil intake (floating, stationary)	Stationary
Oil filter system (full flow, part, other)	Full Flow
Capacity of c/case, less filter-refill-L (qt.)	3.8 L (4.0 qt.)

Engine - Diesel Information (NOT APPLICABLE)

Diesel engine manufacturer		
Glow plug, current drain at 0°F.		
Injector nozzle	Type	
	Opening pressure kPa (psi)	
Pre-chamber design		
Fuel Injection pump	Manufacturer	
	Type	
Fuel injection pump drive (belt, chain, gear)		
Supplementary vacuum source (type)		
Fuel heater (yes/no)		
Water separator, description (std., opt.)		
Turbo manufacturer		
Oil cooler-type (oil to engine coolant; oil to ambient air)		
Oil filter		

Engine - Intake System (NOT APPLICABLE)

Turbo charger - manufacturer	
Super charger - manufacturer	
Intercooler	

* Finished State

MVMA Specifications

Vehicle Line CAVALIER
Model Year 1995 Issued 9-94

METRIC (U.S. Customary)

Engine Description	2.3 LITER L4 (138 CID)
Engine Code	MULTI-PORT FUEL INJECTION RPO LD2

Engine - Valve System

Hydraulic lifters (std., opt., n.a.)		Standard
Valves	Number intake / exhaust	4/4
	Head O.D. intake / exhaust	36.50 mm (1.44 in.)/ 31.50 mm (1.24 in.)

Engine - Connecting Rods

Material & mass kg., (weight, lbs.)*	Steel 689 kg (1.5 lbs.) each
Length (axes C/L to C/L)	147.5 mm (5.81 in.)

Engine - Crankshaft

Material & mass kg., (weight, lbs.)*		Cast Iron 19.0 kg (41.9 lbs.)
End thrust taken by bearing (no.)		#3
Length & number of main bearings		#1,2,4 & 5, 21.25 mm (.84 in.); #3 27.25 mm (109 in.)/5
Seal (material, one, two piece design, etc.)	Front	One Piece, Viton
	Rear	One Piece, Viton

Engine - Lubrication System

Normal oil pressure kPa (psi) at engine rpm	207 (30) @ 200
Type oil intake (floating, stationary)	Stationary Pick-Up
Oil filter system (full flow, part, other)	Full Flow
Capacity of c/case, less filter-refill-L (qt.)	3.76 L (4 qt.)

Engine - Diesel Information (NOT APPLICABLE)

Diesel engine manufacturer		
Glow plug, current drain at 0°F.		
Injector nozzle	Type	
	Opening pressure kPa (psi)	
Pre-chamber design		
Fuel Injection pump	Manufacturer	
	Type	
Fuel injection pump drive (belt, chain, gear)		
Supplementary vacuum source (type)		
Fuel heater (yes/no)		
Water separator, description (std., opt.)		
Turbo manufacturer		
Oil cooler-type (oil to engine coolant; oil to ambient air)		
Oil filter		

Engine - Intake System (NOT APPLICABLE)

Turbo charger - manufacturer	
Super charger - manufacturer	
Intercooler	

* Finished State

MVMA Specifications

Vehicle Line CAVALIER
Model Year 1995 Issued 9-94 Revised (•)

METRIC (U.S. Customary)

Engine Description
Engine Code

2.2 LITER L4 (133 CID)
MULTI-PORT FUEL INJECTION RPO LN2

Engine - Cooling System

Coolant recovery system (std., opt., n.a.)		Standard	
Coolant fill location (rad., bottle)		Surge Tank	
Radiator cap relief valve pressure kPa (psi)		103 kPa (15 psi)	
Circulation thermostat	Type (choke, bypass)	Choke	
	Starts to open at °C (°F)	91° C (195° F)	
Water pump	Type (centrifugal, other)	Centuifugal	
	GMP 1000 pump rpm	7.3	
	Number of pumps	1	
	Drive (V-belt, other)	Ploy-Vee Serpentine	
	Bearing type	Sealed, Ball Roller	
	Impeller material	Stamped Steel	
	Housing material	Aluminum	
By-pass recirculation type (inter., ext.)		External - Thur Intake Manifold Internal	
Cooling System capacity	With heater - L (qt.)	10.1 L (10.7 qt.)	
	With air conditioner - L (qt.)	10.1 L (10.7 qt.)	
	Opt. equipment specify - L (qt.)		
Water jackets full length of cyl. (yes, no)		No - Between Bores Siamese Below Ring Travel	
Water all around cylinder (yes, no)		Yes - In Ring Travel Area	
Water jackets open at head face (yes, no)		Yes	
Radiator core	Std., A/C, HD	Standard A/C + Manual	Standard or A/C+Automatic
	Type (cross-flow, etc.)	Cross-Flow	
	Construction (fin & tube mechanical, braze, etc.)	Tube & Fin/Blazed Aluminum	
	Material, mass kg (wgt., lbs.)	2.951 kg (6.51 lbs.)	3.859 kg (8.51 lbs.)
	Width	383 mm (15.07 in.)	
	Height	660 mm (25.99 in.)	
	Thickness	24 mm (.94 in.)	
	Fins per inch	6.37	8.47
Radiator end tank material		Plastic	
Fan	Std., elec., opt.	Elect	Electric, A/C
	Number of blades & type (flex, solid, material)	6 Solid Plastic	7, Solid Plastic
	Number & location (front, rear of radiator)	1 Rear	1 Rear
	Diameter & projected width	316 (12.4)	
	Ratio (fan to crankshaft rev.)	Not Applicable	
	Fan cutout type	ECM Controlled	
	Drive type (direct, remote)	Direct - Electric Motor	
	RPM at idle (elec.)	1800	
	Motor rating (wattage/elec.)	100 Watts	150 Watts
	Motor switch (type & location/elec.)	Engine Block	
	Switch point (temp./pressure/elec.)	On At 106° Deg. C, Off At 100° Deg. C	
	Fan shroud (material)	Bracket	Plastic

MVMA Specifications

Vehicle Line CAVALIER
Model Year 1995 Issued 9-94 Revised (•)

METRIC (U.S. Customary)

Engine Description
Engine Code

2.3 LITER L4 (138 CID)
MULTI-PORT FUEL INJECTION RPO LD2

Engine - Cooling System

Coolant recovery system (std., opt., n.a.)		Standard	
Coolant fill location (rad., bottle)		Surge Tank	
Radiator cap relief valve pressure kPa (psi)		109.6 kPa (15.9 psi)	
Circulation thermostat	Type (choke, bypass)	Choke	
	Starts to open at °C (°F)	82.5°C (180°F)	
Water pump	Type (centrifugal, other)	Centrifugal	
	GPM 1000 pump rpm	8.0 GPM	
	Number of pumps	1	
	Drive (V-belt, other)	Other/Spling Driven Sprocket/ Chain Drive Sprocket	
	Bearing type	Ball/Ball Sealer	
	Impeller material	Steel	
	Housing material	Aluminum	
By-pass recirculation type (inter., ext.)		EXT	
Cooling System capacity	With heater - L (qt.)	9.8 L (10.4 qt.)	
	With air conditioner - L (qt.)	9.8 L (10.4 qt.)	
	Opt. equipment specify - L (qt.)		
Water jackets full length of cyl. (yes, no)		Yes	
Water all around cylinder (yes, no)		No	
Water jackets open at head face (yes, no)		Yes	
Radiator core	Std., A/C, HD	Standard or A/C + Manual	Standard or A/C + Auto
	Type (cross-flow, etc.)	Cross - Flow	
	Construction (fin & tube mechanical, braze, etc.)	Tube & Fin/ Brazed Aluminum	
	Material, mass kg (wgt., lbs.)	2.95 kg (6.51 lbs.)	4.029 kg (8.88 lbs.)
	Width	383 (15.07)	
	Height	660 (25.99)	
	Thickness	24 (.94)	
	Fins per inch	6.37	8.47
Radiator end tank material		Plastic	
Fan	Std., elec., opt.	Elect	Electric, A/C
	Number of blades & type (flex, solid, material)	6 Solid Plastic	7, Solid Plastic
	Number & location (front, rear of radiator)	1 Rear	1 Rear
	Diameter & projected width	316 (12.4)	371 (14.6)
	Ratio (fan to crankshaft rev.)	Not Applicable	
	Fan cutout type	ECM Controlled Direct - Electric Motor	
	Drive type (direct, remote)	Direct - Electric	
	RPM at idle (elec.)	1800	
	Motor rating (wattage/elec.)	100 Watts	150 Watts
	Motor switch (type & location/elec.)	Engine Block	
	Switch point (temp./pressure/elec.)	On At 106°; Off At 100° Deg. C.	
	Fan shroud (material)	Bracket	Plastic

MVMA Specifications

Vehicle Line: CAVALIER
Model Year: 1995 Issued: 9-94 Revised (●):

METRIC (U.S. Customary)

Engine Description
Engine Code

2.2 LITER L4 (133 CID)
MULTI-PORT FUEL INJECTION RPO LN2

Engine - Fuel System

(See Supplemental page for details of Fuel Injection, Supercharger, Turbocharger, etc. if used.)

Induction type: carburetor, fuel injection system, etc.		Fuel Injection
Manufacturer		AC/ Rochester Products
Carburetor no. of barrels		None
Idle A/F mix.		Computer Controlled
Fuel injection	Point of injection (no.)	Entering Cylinder Head (Four)
	Constant, pulse, flow	Pulse
	Control (electronic, mech.)	Electronic
	System pressure kPa (psi)	294 - 306 (43 - 44)
Idle speed-rpm (spec. neutral or drive and propane if used)	Manual	Computer Controlled
	Automatic	Computer Controlled
Intake manifold heat control (exhaust or water thermostatic or fixed)		None
Air cleaner type		Single Snorkel
Fuel filter (type/location)		Replaceable/Inline Rear Of Tank
Fuel pump	Type (elec. or mech.)	Electric
	Location (eng., tank)	Fuel Tank
	Pressure range kPa (psi)	Depends on Flow Rate and System Voltage
	Flow rate at regulated pressure L (gal)/hr @ kPa (psi)	62.4 (16.5) @ 350 (51)

Fuel Tank

Capacity refill L (gallons)		57.5 L (15.2 gal.)
Location (describe)		Rear Center Underside, R.H. Rear Quarter Panel
Attachment		Underbody Strap
Material & Mass kg. (weight lbs.)		Steel
Filler pipe	Location & material	Right Rear Quarter Panel - Steel
	Connection to tank	Hoses
Fuel line (material)		Steel, Multi-Layer Nylon 12
Fuel hose (material)		Rubber
Return line (material)		Steel, Multi-Layer Nylon 12
Vapor line (material)		Steel, Nylon 12
Extended range tank	Opt., n.a.	Not Applicable
	Capacity L (gallons)	
	Location & material	
	Attachment	
Auxiliary tank	Opt., n.a.	Not Applicable
	Capacity L (gallons)	
	Location & material	
	Attachment	
	Selector switch or valve	
	Separate fill	

MVMA Specifications

METRIC (U.S. Customary)

Vehicle Line: CAVALIER
Model Year: 1995 Issued: 9-94 Revised (•):

Engine Description
Engine Code

2.3 LITER L4 (138 CID)
MULTI-PORT FUEL INJECTION RPO LD2

Engine - Fuel System

(See Supplemental page for details of Fuel Injection, Supercharger, Turbocharger, etc. if used.)

Induction type: carburetor, fuel injection system, etc.		Port Fuel Injection
Manufacturer		AC Rochester
Carburetor no. of barrels		None
Idle A/F mix.		PCM Controlled
Fuel injection	Point of injection (no.)	At Port Of Cylinders
	Constant, pulse, flow	Pulse
	Control (electronic, mech.)	Electronic
	System pressure kPa (psi)	300 (43)
Idle speed-rpm (spec. neutral or drive and propane if used)	Manual	PCM Controlled
	Automatic	PCM Controlled
Intake manifold heat control (exhaust or water thermostatic or fixed)		None
Air cleaner type		Replacement Paper Element
Fuel filter (type/location)		In-Line Replaceable
Fuel pump	Type (elec. or mech.)	Elec.
	Location (eng., tank)	In Tank
	Pressure range kPa (psi)	Depends on Flow and System Voltage
	Flow rate at regulated pressure L (gal)/hr @ kPa (psi)	62.4 @ 350

Fuel Tank

Capacity refill L (gallons)		57.6 L (15.2 gal.)
Location (describe)		Rear Center Underside, R. H. Rear Quarter Panel
Attachment		Underbody Strap
Material & Mass kg. (weight lbs.)		Steel
Filler pipe	Location & material	Right Rear Quarter Panel - Steel
	Connection to tank	Hoses
Fuel line (material)		Steel Multi-Layer Nylon 12
Fuel hose (material)		Rubber
Return line (material)		Steel, Multi-Layer Nylon 12
Vapor line (material)		Steel, Nylon 12
Extended range tank	Opt., n.a.	Not Applicable
	Capacity L (gallons)	
	Location & material	
	Attachment	
Auxiliary tank	Opt., n.a.	
	Capacity L (gallons)	Not Applicable
	Location & material	
	Attachment	
	Selector switch or valve	
	Separate fill	

MVMA Specifications

Vehicle Line CAVALIER
Model Year 1995 Issued 9-94 Revised (•)

METRIC (U.S. Customary)

Engine Description
Engine Code

2.2 LITER L4 (133 CID)
MULTI-PORT FUEL INJECTION RPO LN2

Vehicle Emission Control

Type (air injection, engine modifications, other)			CCC Control
Exhaust Emission Control	Air injection	Pump or pulse	Not
		Driven by	Applicable
		Air distribution (head, manifold, etc.)	•
		Point of entry	•
	Exhaust Gas Recirculation	Type (controlled flow, open orifice, other)	Negative Back Pressure EGR Valve With Integral Transducer And Single Shaft Cross Hole
		Exhaust source	#4 Cylinder At Cylinder Head
		Point of exhaust injection (spacer, carburetor, manifold, other)	Inlet Manifold
	Catalytic Converter	Type	3 - Way Monoliith
		Number of	1
		Locations(s)	Mounted To Center Underbody
		Volume L (in³)	1.8 (110)
		Substrate type	Monolith
		Noble metal type	Platinum (Pt.), Rhodium (Rh.)
		Noble metal concentration (g/cm³)	.000948
Crankcase Emission Control	Type (ventilates to atmosphere, induction system, other)		Induction System
	Energy source (manifold vacuum, carburetor, other)		Manifold Vacuum
	Discharges to (intake manifold, other)		Intake Manifold
	Air inlet (breather cap, other)		Air Cleaner Outlet Duct
Evaporative Emission Control	Vapor vented to (crankcase, canister, other)	Fuel Tank	Canister
		Carburetor	—
	Vapor storage provision		Charcoal
Electronic system	Closed loop (yes/no)		Yes
	Open loop (yes/no)		No

Engine - Exhaust System

Type (single, single with cross-over, dual, other)		Single
Ø Muffler no. & type (reverse flow, straight thru, separate resonator) , Muffler volume (liters), Material & Mass kg. (weight lbs.)		1, Reverse Flow
Ø Resonator no., type, & volume (liters)		None
Exhaust pipe	Branch o.d., wall thickness	---
	Main o.d., wall thickness	50.8 x 1.37 mm (2.0 x .054 in.)
	Material & Mass kg. (weight lbs.)	Stainless Steel
Intermediate pipe	o.d. & wall thickness	50.8 x 1.37 mm (2.0 x .054 in.)
	Material & Mass kg. (weight lbs.)	Stainless Steel
Tail pipe	o.d. & wall thickness	50.8 x 1.37 mm (2.0 x .054 in.)
	Material & Mass kg. (weight lbs.)	Stainless Steel

MVMA Specifications

METRIC (U.S. Customary)

Vehicle Line: CAVALIER
Model Year: 1995 Issued: 9-94 Revised (●)

Engine Description
Engine Code

2.3 LITER L4 (138 CID)
MULTI-PORT FUEL INJECTION RPO LD2

Vehicle Emission Control

Type (air injection, engine modifications, other)			Engine Modification
Exhaust Emission Control	Air injection	Pump or pulse	None
		Driven by	
		Air distribution (head, manifold, etc.)	
		Point of entry	
	Exhaust Gas Recircula-tion	Type (controlled flow, open orifice, other)	None
		Exhaust source	
		Point of exhaust injection (spacer, carburetor, manifold, other)	
	Catalytic Converter	Type	Single Bed
		Number of	1
		Locations(s)	Under Floor
		Volume L (in³)	2.671 (163)
		Substrate type	Monolith - Ceramic
		Noble metal type	Platinum (Pt.), Paladium (Pd.), Rhodium (Rh.)
		Noble metal concentration (g/cm³)	.00082 /-/ .00006
Crankcase Emission Control	Type (ventilates to atmosphere, induction system, other)		Orifice + Bypass. No PCV Valve Closed - Ventrilates to Induction System
	Energy source (manifold vacuum, carburetor, other)		Orificed Connection To Manifold Vacuum Open House Connection to Clean Side Of A/C
	Discharges to (intake manifold, other)		Induction System
	Air inlet (breather cap, other)		None
Evaporative Emission Control	Vapor vented to (crankcase, canister, other)	Fuel Tank	Canister
		Carburetor	None
	Vapor storage provision		Charcoal Canister
Electronic system	Closed loop (yes/no)		Yes
	Open loop (yes/no)		No

Engine - Exhaust System

Type (single, single with cross-over, dual, other)		Single
Ø Muffler no. & type (reverse flow, straight thru, separate resonator) , Muffler volume (liters), Material & Mass kg. (weight lbs.)		1, Reverse Flow
Ø Resonator no., type, & volume (liters)		None
Exhaust pipe	Branch o.d., wall thickness	----
	Main o.d., wall thickness	50.8 x 1.37 mm (2.0 x .054)
	Material & Mass kg. (weight lbs.)	Stainless Steel
Intermediate pipe	o.d. & wall thickness	50.8 x 1.37 mm (2.0 x .054 in.)
	Material & Mass kg. (weight lbs.)	Stainless Steel
Tail pipe	o.d. & wall thickness	50.8 x 1.37 mm (2.0 x .054 in.)
	Material & Mass kg. (weight lbs.)	Stainless Steel

MVMA Specifications

Vehicle Line CAVALIER
Model Year 1995 Issued 9-94 Revised (•)

METRIC (U.S. Customary)

Engine Description	2.2 LITER L4 (133 CID)
Engine Code	MULTI-PORT FUEL INJECTION RPO LN2

Transmissions/Transaxle (Std., Opt., N.A.)

Manual 4-speed (manufacturer/country)	Not Applicable
Manual 5-speed (manufacturer/country)	Standard Isuzu/Japan (MK7)
Manual 6-speed (manufacturer/country)	Not Appilcable
Automatic (manufacturer/country)	Optional, General Motor Powertrain/ U.S.A
Automatic overdrive (manufacturer/country)	Not Applicable

Manual Transmission/Transaxle

Number of forward speeds		5
Gear ratios	1st	3.91
	2nd	2.18
	3rd	1.45
	4th	1.03
	5th	0.74
	6th	
	Reverse	3.58
Synchronous meshing (specify gears)		1-5
Shift lever location		Floor
Trans. case material & mass kg. (lbs.)*		Aluminum 36.5 kg (80.5 lbs.)
Lubricant	Capacity L (pt.)	1.9 L (4.0 pt.)
	Type recommended	Synchromesh Transmission Fluid (STF)

Clutch (Manual Transmission)

Clutch manufacturer		Daikin
Clutch type (dry, wet; single, multiple disc)		Dry Disc, Single
Linkage (hydraulic, cable, rod, lever, other)		Hydraulic
Max. pedal effort (nom. spring load) N (lbs.)	Depressed	133.4 (30.0)
	Released	115.6 (26.0)
Assist (spring, power/percent, nominal)		Over Center Spring
Type pressure plate springs		Diaphragm
Total spring load (nominal) N (lbs.)		5688 (1279)
Clutch facing	Facing mfgr. & material coding	Valeo F202
	Facing material & construction	F202
	Rivets per facing	16
	Outside x inside dia. (nominal)	215.0 x 150.0 (8.46 x 5.91)
	Total eff. area cm² (in.²)	186.3 (28.8)
	Thickness (pressure plate side/fly wheel side)	3.5 (.14) Pressure Plate Side, 3.2 (.13) Flywheel Side
	Rivet depth (pressure plate side/fly wheel side)	1.3 (0.05)/ 1.2 (0.05)
	Engagement cushion method	Driven Plate Wave Spoke Springs
Release bearing type & method lub.		Self Centering, Angular Contact Ball Bearing - Prepacked & Sealed
Torsional damping method, springs, hysteresis		Coil Springs With Non- Metal Friction Control

* Includes shift linkage, lubricant, and clutch housing. If other specify.

MVMA Specifications

Vehicle Line CAVALIER
Model Year 1995 Issued 9-94 Revised (•)

METRIC (U.S. Customary)

Engine Description	2.3 LITER L4 (138 CID)
Engine Code	MULTI-PORT FUEL INJECTION RPO LD2

Transmissions/Transaxle (Std., Opt., N.A.)

Manual 4-speed (manufacturer/country)	
Manual 5-speed (manufacturer/country)	Standard Isuzu / Japan MJ1
Manual 6-speed (manufacturer/country)	
Automatic (manufacturer/country)	
Automatic overdrive (manufacturer/country)	

Manual Transmission/Transaxle

Number of forward speeds		5
Gear ratios	1st	3.73
	2nd	2.18
	3rd	1.33
	4th	.92
	5th	.74
	6th	
	Reverse	
Synchronous meshing (specify gears)		
Shift lever location		
Trans. case material & mass kg. (lbs.)*		
Lubricant	Capacity L (pt.)	
	Type recommended	

Clutch (Manual Transmission)

Clutch manufacturer		Daikin
Clutch type (dry, wet; single, multiple disc)		Dry Disc Single
Linkage (hydraulic, cable, rod, lever, other)		Hydraulic
Max. pedal effort (nom. spring load) N (lbs.)	Depressed	133.4 (30.0)
	Released	115.6 (26.0)
Assist (spring, power/percent, nominal)		Over Center Spring
Type pressure plate springs		Diaphram
Total spring load (nominal) N (lbs.)		5888 1279
Clutch facing	Facing mfgr. & material coding	Valoe F202
	Facing material & construction	F202
	Rivets per facing	16
	Outside x inside dia. (nominal)	225.0 x 150.0
	Total eff. area cm² (in.²)	221
	Thickness (pressure plate side/fly wheel side)	3.5 (.14) Pressure Plate Side, 3.2 (.13) Flywheel Side
	Rivet depth (pressure plate side/fly wheel side)	1.3 (.05) / 1.2 (.05)
	Engagement cushion method	Driven Plate Wave Spoke Springs
Release bearing type & method lub.		Self Centering Angular Contact Ball Prepacked & Sealed
Torsional damping method, springs, hysteresis		Coil Springs With Non Metal Friction Control

* Includes shift linkage, lubricant, and clutch housing. If other specify.

MVMA Specifications

Vehicle Line: CAVALIER
Model Year: 1995 Issued: 9-94 Revised (•):

METRIC (U.S. Customary)

Engine Description
Engine Code

2.2 LITER L4 (133 CID)
MULTI-PORT FUEL INJECTION RPO LN2

Automatic Transmission/Transaxle

Trade Name		3T40 Transaxle Assembly (MD9)
Type and special features (describe)		3-Speed Automatic, Fully Automatic Shifted Platetary Gear With Torque Converter And Lock-Up Clutch
Shift mechanics		Sycronous
Gear selector	Location (column, floor, other)	Column & Floor
	Ltr./No. designation (e.g. PRND21)	P-R-N-D-2-1
	Shift interlock (yes, no, describe)	Yes
Gear ratios	1st	2.84
	2nd	1.60
	3rd	1.00 (Converter Clutch Engagement)
	4th	Not Applicable
	5th	▪
	6th	▪
	Reverse	2.07
	Final drive ratio	2.84; Effective Final Drive Ratio = 3.18
Max. upshift vehicle speed - drive range km/h (mph)		2 -3 = 143 (89)
Max. upshift engine speed RPM		6200
Max. kickdown speed - drive range km/h (mph)		3 - 2 = 143 (85)
Min. overdrive speed km/h (mph)		Depends On Axle Application
Torque converter	Type	Lock - Up
	Torus design	Yes
	Number of elements	3
	Max. ratio at stall	2.48
	Type of cooling (air, liquid)	Liquid
	Nominal diameter	245 (9.8)
	Capacity factor "K"*	203
Pump type		Positive Varible Displacement Vane
Lubricant	Capacity refill L (pt.)	8.5 L (17.85 pt.) Dry Transmission, Original Filling
	Type recommended	Dexron III
Oil cooler (std., opt., N.A., internal, external, air, liquid)		Standard Integral Part Of Radiator
Transmission mass kg (lbs.) & case material**		65.7 kg (144.54 lbs.) Dry Weight

All Wheel / 4 Wheel Drive

(NOT APPLICABLE)

Description & type (part-time, full-time, 2/4 shift while moving, mechanical, elect., chain/gear, etc.)		
Transfer case	Manufacturer and model	
	Type and location	
Low-range gear ratio		
System disconnect (describe)		
Center differential	Type (bevel, planetary, w or w/o viscous bias, torsen, etc.)	
	Torque split (% front/rear)	

* Input speed $\div \sqrt{\text{torque}}$

** Dry weight including torque converter. If other, specify.

MVMA Specifications

Vehicle Line CAVALIER
Model Year 1995 Issued 9-94 Revised (●)

METRIC (U.S. Customary)

Engine Description
Engine Code

2.3 LITER L4
MULTI-PORT FUEL INJECTION RPO LD2

Automatic Transmission/Transaxle

Trade Name		Hydra - Matic 4T40 - E (MN4) Transaxle
Type and special features (describe)		4-Speed Automatic w/ Over Drive & Torque Converter Clutch
Shift mechanics		Hydraulic Clutches Electronic Controls
Gear selector	Location (column, floor, other)	Floor
	Ltr./No. designation (e.g. PRND21)	P-R-N-(D)-D-2-1
	Shift interlock (yes, no, describe)	Yes
Gear ratios	1st	2.96
	2nd	1.63
	3rd	1.0
	4th	.68
	5th	
	6th	
	Reverse	2.13
	Final drive ratio	3.29 Effective F.D. = 3.91
Max. upshift vehicle speed - drive range km/h (mph)		
Max. upshift engine speed RPM		6500
Max. kickdown speed - drive range km/h (mph)		
Min. overdrive speed km/h (mph)		Axle Ratio Dependent
Torque converter	Type	Lock-Up
	Torus design	Yes
	Number of elements	3
	Max. ratio at stall	2.70
	Type of cooling (air, liquid)	Liquid
	Nominal diameter	245 mm (9.8)
	Capacity factor "K"*	237 K
Pump type		Variable Displacement Vane
Lubricant	Capacity refill L (pt.)	7 L (14.7 pt.) (Bottom Pan Service) 10 L (21 pt.) (Complute Over Haul) 11.5 l Dry
	Type recommended	Dexton III
Oil cooler (std., opt., N.A., internal, external, air, liquid)		Standard, Integral w/ Radiator
Transmission mass kg (lbs.) & case material**		74.7 kg (164.68 lbs.) Dry 85.0 kg (187.38 lbs.) Wet

All Wheel / 4 Wheel Drive (NOT APPLICABLE)

Description & type (part-time, full-time, 2/4 shift while moving, mechanical, elect., chain/gear, etc.)		
Transfer case	Manufacturer and model	
	Type and location	
Low-range gear ratio		
System disconnect (describe)		
Center differential	Type (bevel, planetary, w or w/o viscous bias, torsen, etc.)	
	Torque split (% front/rear)	

* Input speed $\div \sqrt{\text{torque}}$

** Dry weight including torque converter. If other, specify.

MVMA Specifications

Vehicle Line CAVALIER
Model Year 1995 Issued 9-94 Revised (●)

METRIC (U.S. Customary)

Engine Description
Engine Code

2.2 LITER L4 (133 CID)
MULTI-PORT FUEL INJECTION RPO LN2

Axle Ratio and Tooth Combinations (See 'Power Teams' for axle ratio usage)

Effective final drive ratio (or overall top gear ratio)			MK7 3.58 MD9 3.18
Transfer ratio and method (chain, gear, etc.)			1.00 Chain 35/33
Front drive unit	Ring gear o.d.		Not Applicable
	No. of teeth	Pinion	▪
		Ring gear	▪

Front Drive Unit

Description (integral to trans., etc.)		Planetary Final Drive - Integral With Transmission
Limited slip differential (type)		Not Applicable
Drive pinion	Type	▪
	Offset	▪
No. of differential pinions		2
Pinion / differential	Adjustment (shim, etc.)	Not Applicable
	Bearing adjustment	▪
Driving wheel bearing (type)		
Lubricant	Capacity L (pt.)	See Automatic Trans Spec.
	Type recommended	▪

Axle Shafts - Front Wheel Drive

Manufacturer and number used			Saginaw Division, 2
Type (straight, solid bar, tubular, etc.)		Left	Straight - Solid
		Right	Straight - Solid
Outer diam. x length* x wall thickness	Manual Transaxle	Left	23.8 x 335.0 mm (.94 x 13.19 in.)
		Right	23.8 x 694.6 mm (.94 x 27.35 in.)
	Automatic transaxle	Left	23.8 x 319.6 mm (.94 x 12.58 in.)
		Right	23.8 x 389.6 mm (.94 x 15.34 in.)
	Optional transaxle	Left	
		Right	
Slip yoke	Type		
	Number of teeth		
	Spline o.d.		
Universal joints	Make and mfg. no.	Inner	Saginaw Division
		Outer	Saginaw Division
	Number used		Inboard & Outboard On Each Axle Shaft
	Type, size, plunge	Inner	Tripot - 61.0 Stroke
		Outer	Rzeppa- Fixed Center
	Attach (u-bolt, clamp, etc.)		Retaining Ring Inner Washer Nut Outer
	Bearing	Type (plain, anti-friction)	Inner - Ball & Roller Outer - Ball
		Lubrication (fitting, prepack)	Prepacked
Drive taken through (torque tube, arms or springs)			Wisebone Lower Control Arm Upper MacPherson Strut
Torque taken through (torque tube, arms or springs)			Engine Mounting System

* Centerline to centerline of universal joints, or to centerline of attachment.

MVMA Specifications

Vehicle Line CAVALIER
Model Year 1995 Issued 9-94 Revised (•)

METRIC (U.S. Customary)

Engine Description
Engine Code

2.3 LITER L4 (138 CID)
MULTI-PORT FUEL INJECTION RPO LD2

Axle Ratio and Tooth Combinations (See 'Power Teams' for axle ratio usage)

Effective final drive ratio (or overall top gear ratio)			MJ1 3.94 MN4 3.91
Transfer ratio and method (chain, gear, etc.)			.8919 (37/33) & 1.12 (33/37)
Front drive unit	Ring gear o.d.		Not Applicable
	No. of teeth	Pinion	▪
		Ring gear	▪

Front Drive Unit

Description (integral to trans., etc.)		Planetary Final Drive Integral With Tansmission
Limited slip differential (type)		Not Applicable
Drive pinion	Type	▪
	Offset	▪
No. of differential pinions		2
Pinion / differential	Adjustment (shim, etc.)	Not Applicable
	Bearing adjustment	▪
Driving wheel bearing (type)		
Lubricant	Capacity L (pt.)	See Automatic Trans. Spec.
	Type recommended	▪

Axle Shafts - Front Wheel Drive

Manufacturer and number used			Saginaw Division
Type (straight, solid bar, tubular, etc.)		Left	Straight Solid
		Right	▪
Outer diam. x length* x wall thickness	Manual Transaxle	Left	27.1 mm x 331.0 mm (1.07 in. x 13.03 in.)
		Right	27.1 mm x 331.0 mm (1.07 in. x 13.03 in.)
	Automatic transaxle	Left	27.1 mm x 313.0 mm (1.07 in. x 12.32 in.)
		Right	27.1 mm x 313.0 mm (1.07 in. x 12.32 in.)
	Optional transaxle	Left	
		Right	37.0 mm x 445.3 mm (Manual Only)
Slip yoke	Type		
	Number of teeth		
	Spline o.d.		
Universal joints	Make and mfg. no.	Inner	Saginaw Division
		Outer	Inboard and Outboard On Each Drive Shaft
	Number used		Free Motion 61.8 Stroke
	Type, size, plunge	Inner	Rzeppa Fixed Center
		Outer	Snap Ring Inner Washer Nut Outer
	Attach (u-bolt, clamp, etc.)		Inner - Ball and Roller Outer Ball
	Bearing: Type (plain, anti-friction)		Prepacked
	Bearing: Lubrication (fitting, prepack)		
Drive taken through (torque tube, arms or springs)			
Torque taken through (torque tube, arms or springs)			

* Centerline to centerline of universal joints, or to centerline of attachment.

MVMA Specifications

Vehicle Line CAVALIER
Model Year 1995 Issued 9-94 Revised (●)

METRIC (U.S. Customary)

Engine Description
Engine Code

2.3 LITER L4 (138 CID)
MULTI-PORT FUEL INJECTION RPO LD2

Axle Ratio and Tooth Combinations (See 'Power Teams' for axle ratio usage) (NOT AVAILABLE)

Axle ratio (or overall top gear ratio)		
Ring gear o.d.		
No. of teeth	Pinion	
	Ring gear	

Rear Axle Unit (NOT AVAILABLE)

Description		
Limited slip differential (type)		
Drive pinion	Type	
	Offset	
No. of differential pinions		
Pinion / differential	Adjustment (shim, etc.)	
	Bearing adjustment	
Driving wheel bearing (type)		
Lubricant	Capacity L (pt.)	
	Type recommended	

Propeller Shaft - Rear Wheel Drive (NOT AVAILABLE)

Manufacturer Type (straight tube, tube-in-tube, internal-external damper, etc.)			
Outer diam. x length* x wall thickness	Manual 4-speed transmission		
	Manual 5-speed transmission		
	Manual 6-speed transmission		
	Overdrive		
	Automatic transmission		
Intermediate bearing	Type (plain, anti-friction)		
	Lubrication (fitting, prepack)		
Slip yoke	Type		
	Number of teeth		
	Spline o.d.		
Universal joints	Make and mfg. no.	Front	
		Rear	
	Number used		
	Type (ball and trunnion, cross)		
	Rear attach (u-bolt, clamp, etc.)		
	Bearing	Type (plain, anti-friction)	
		Lubricatilon (fitting, prepack)	
Drive taken through (torque tube, arms or springs)			
Torque taken through (torque tube, arms or springs)			

* Centerline to centerline of universal joints, or to centerline of rear attachment.

MVMA Specifications

Vehicle Line: CAVALIER
Model Year: 1995 Issued: 9-94 Revised (•)

METRIC (U.S. Customary)

Engine Description Engine Code	2.3 LITER L4 (133 CID) MULTI-PORT FUEL INJECTION RPO LN2

Axle Ratio and Tooth Combinations (See 'Power Teams' for axle ratio usage) (NOT AVAILABLE)

Axle ratio (or overall top gear ratio)		
Ring gear o.d.		
No. of teeth	Pinion	
	Ring gear	

Rear Axle Unit (NOT AVAILABLE)

Description		
Limited slip differential (type)		
Drive pinion	Type	
	Offset	
No. of differential pinions		
Pinion / differential	Adjustment (shim, etc.)	
	Bearing adjustment	
Driving wheel bearing (type)		
Lubricant	Capacity L (pt.)	
	Type recommended	

Propeller Shaft - Rear Wheel Drive (NOT AVAILABLE)

Manufacturer Type (straight tube, tube-in-tube, internal-external damper, etc.)			
Outer diam. x length* x wall thickness	Manual 4-speed transmission		
	Manual 5-speed transmission		
	Manual 6-speed transmission		
	Overdrive		
	Automatic transmission		
Intermediate bearing	Type (plain, anti-friction)		
	Lubrication (fitting, prepack)		
Slip yoke	Type		
	Number of teeth		
	Spline o.d.		
Universal joints	Make and mfg. no.	Front	
		Rear	
	Number used		
	Type (ball and trunnion, cross)		
	Rear attach (u-bolt, clamp, etc.)		
	Bearing	Type (plain, anti-friction)	
		Lubrication (fitting, prepack)	
Drive taken through (torque tube, arms or springs)			
Torque taken through (torque tube, arms or springs)			

* Centerline to centerline of universal joints, or to centerline of rear attachment.

MVMA Specifications

Vehicle Line CAVALIER
Model Year 1995 Issued 9-94 Revised (•)

METRIC (U.S. Customary)

Model Code/Description And/Or Engine Code/Description: ALL

Suspension - General Including Electronic Controls

Car leveling	Standard/optional/not available		N/A
	Manual/automatic control		N/A
	Type (air/hydraulic)		N/A
	Primary/assist spring		N/A
	Rear only/4 wheel leveling		N/A
	Single/dual rate spring		N/A
	Single/dual ride heights		N/A
	Provision for jacking		Body Jack & Pads On Rocker
Shock absorber damping controls	Standard/option/not available		N/A
	Manual/automatic control		N/A
	Number of damping rates		N/A
	Type of actuation (manual/ electric motor/air, etc.)		N/A
	Sensors	Lateral acceleration	N/A
		Deceleration	N/A
		Acceleration	N/A
		Road surface	N/A
Shock absorber (front & rear)	Type		Front - MacPherson Strut; Rear - Double Acting Hydraulic
	Make		Delco Chassis
	Piston diameter		Front 32 (1.26) Rear 25 (.98)
	Rod diameter		Front 22 (.87) Rear 13 (.51)

Suspension - Front

Type and description		MacPherson Strut With Coil Spring
Travel	Full jounce (define load condition)	83 (3.3) (From Design)
	Full rebound	80 (3.1) (From Sesign)
Spring	Type (coil, leaf, other & material)	Coil, Steel
	Insulators (type & material)	Top & Bottom - Rubber
	Size (Leaf: length & width; Coil: design height & i.d.; Bar: length & diameter)	Spring Computer Selected - Varies With Option Content Design Hgt / Body I.D. / Bar dia Range / Bar Length Range 191.6 mm (7.5) / 88-123.5 mm (4.8) / 13.5-14.2 mm (5.5) / 2510-2630 mm (103.5)
	Spring rate N/mm (lb./in.)	27 N/mm (1.06) & 29 N/mm (1.14)(Base); 31 N/mm (Uplevel)
	Rate at wheel N/mm (lb./in.)	31 (1.2) N/mm
Stabilizer	Type (link, linkless, frameless)	Link
	Material & O.D. bar/tube, wall thickness	Steel 19 mm (.74) (Base); 20.0 mm (.79) (Uplevel)

Suspension - Rear

Type and description			Trailing Tubular Control Arms With Twist Beam
Travel	Full jounce (define load condition)		100mm (3.93) (From Design)
	Full rebound		90 mm (.35) (From Design)
Spring	Type (coil, leaf, other & material)		Coil, Steel
	Size (Leaf: length & width; Coil: design height & i.d.; Bar: length & diameter)		Spring Computer Selected - Varies With Option Content Design Hgt / Body I.D. / Bar dia Range / Bar length Range 242.7 mm (9.5) / 105 mm (4.13) / 11.4-12.6 mm (.49) / 2500-2700 mm (106.2)
	Spring rate N/mm (lb./in.)		19 (.74) N/mm & 21 (.82) N/mm (Base)
	Rate at wheel N/mm (lb./in.)		22 (.86) N/mm
	Insulators (type & material)		Top - Rubber
	If leaf	No. of leaves	---
		Shackle (comp. or tens.)	---
Stabilizer	Type (link, linkless, frameless)		---
	Material & O.D. bar/tube, wall thickness		---
Track bar (type)			---

MVMA Specifications

Vehicle Line CAVALIER
Model Year 1995 Issued 9-94 Revised (•)

METRIC (U.S. Customary)

Model Code/Description And/Or Engine Code/Description: ALL

Brakes - Service

Description			Power Assisted Hydraulic Brakes
Manufacturer and brake type (std., opt., n.a.)	Front (disc or drum)		Standard - Disc
	Rear (disc or drum)		Standard - Drum
Valving type (proportion, delay, metering, other)			Proportioning, Diagonal Split Circuit
Power brake (std., opt., n.a.)			Standard
Booster type (remote, integral, vac., hyd., etc.)			Tandem Vacuum
Vacuum	Source (inline, pump, etc.)		Inline
	Reservoir (volume in.³)		None
	Pump-type(elec., gear or belt driven)		Not Applicable
Traction assist	Operational speed range		Not Applicable
	Type (engine or brake intervention)		Not Applicable
Antilock device	Front/rear (std., opt., n.a.)		Standard
	Manufacturer		Delco Chassis Division - ABS VI
	Type (electronic, mech.)		Electronic
	Number sensors or circuits		4
	Number antilock hydraulic circuits		3
	Integral or add-on system		Add On
	Yaw control (yes, no)		Yes
	Hyd. power source (elec., vac., mtr., pwr., strg.)		Electric Motor For Each Circuit
Effective area cm² (in.²)*			204 (31.7) Front 324.1 (50.2) Rear
Gross Lining area cm² (in.²)** (F/R)			204 (31.7) Front 324.1 (50.2) Rear
Swept area cm² (in.²)*** (F/R)			1175 (182.2) Front 556 (86.2) Rear
Rotor	Outer working diameter	F/R	Front - 259.5 (10.2)
	Inner working diameter	F/R	Front - 149.6 (5.9)
	Thickness	F/R	Front - 20 (.79)
	Material & type (vented/solid)	F/R	Front - Vented Cast Iron
Drum	Diameter & width	F/R	Rear - 200 x 45 mm (7.87 x 1.77 in.)
	Type and material	F/R	Cast Iron
Wheel cylinder bore			Front - 57 mm (2.24 in.) Rear - 17.5 (.69 in.)
Master cylinder	Bore/stroke	F/R	Bore - 22.2mm (.874 in.) Stroke 35.7 mm (1.41 in.)
Pedal arc ratio			3.00:1
Line press. at 445 N (100 lb.) pedal load [kPa (psi)]			(1,600) Max
Lining clearance		F/R	Both - Self Adjusting
Brake lining	Front wheel	Bonded or riveted (rivets/seg.)	Integrally Molded - Inboard And Outboard
		Rivet Size	Not Applicable
		Manufacturer	Delco Chassis Division
		Lining code *****	130 FE
		Material	Semi- Metallic
		**** Primary or out-board	124 x 46 x 7.96 mm (4.88 x 1.81 x .31 in.)
		Size Secondary or in-board	124 x 46 x 10.40 mm (4.88 x 1.81 x .41 in.)
		Shoe thickness (no lining)	4.85 (.19)
	Rear wheel	Bonded or riveted (rvts/seg.)	Riveted
		Manufacturer	Delco Chassis Division
		Lining code *****	234 FE
		Material	Organic
		**** Primary or out-board	167.9 x 44.2 x 6.6 mm (6.602 x 1.728 x .236 in.)
		Size Secondary or in-board	198.8 x 44.2 x 7.2 mm (7638 x 1.728 x .28 in.)
		Shoe thickness (no lining)	2.75 mm (.11 in.)

* Excludes rivet holes, grooves, chamfers, etc. ** Includes rivet holes, grooves, chamfers, etc.
*** Total swept area for four brakes. (Drum brake: Widest lining contact width for each brake x its contact circumference.) (Disc brake: Square of Outer Working Dia. minus Square of inner Working Dia. multiplied by Pi/2 for each brake.)
**** Size for drum brakes includes length x width x thickness. *****Manufacturer I.D., catalog for formulation designation and coefficient of friction classification.

MVMA Specifications

Vehicle Line CAVALIER
Model Year 1995 Issued 9-94 Revised (•)

METRIC (U.S. Customary)

Model Code/Description And/Or Engine Code/Description

ALL

Tires And Wheels (Standard)

Tires	Size (service description)		P195/70R14
	Type (bias, radial, steel, nylon, etc.)		Radial
	Inflation pressure (cold) for recommended max. vehicle load	Front kPa (psi)	210 kPa (30 psi)
		Rear kPa (psi)	210 kPa (30 psi)
	Rev./mile at 70 km/h (45 mph)		842
Wheels	Type & material		Stamped/Steel
	Rim (size & flange type)		14 X 6J
	Wheel offset		47
	Attachment	Type (bolt or stud & nut)	Stud
		Circle diameter	100 mm
		Number & size	5-12 mm
Spare	Tire and wheel		T115/70D14 Wheel Diameter 14 x 4, Inflation 420 kPa (60 psi)
	Storage position & location (describe)		Under Deck Of Luggage Compartment

Tires And Wheels (Optional)

Tire size (service description)	P195/65R15
Type (bias, radial, steel, nylon, etc.)	Radial
Wheel (type & material)	Aluminum
Rim (size, flange type and offset)	15 x 6J x 47
Tire size (service description)	P205/55R16
Type (bias, radial, steel, nylon, etc.)	Radial
Wheel (type & material)	Aluminum
Rim (size, flange type and offset)	16 x 6J x 47
Tire size (service description)	P195/65R15
Type (bias, radial, steel, nylon, etc.)	Radial
Wheel (type & material)	Stamped/Steel
Rim (size, flange type and offset)	15 x 6J x 47
Tire size (service description)	
Type (bias, radial, steel, nylon, etc.)	
Wheel (type & material)	
Rim (size, flange type and offset)	
Spare tire and wheel size (if configuration is different than road tire or wheel, describe optional spare tire and/or wheel location & storage position)	

Brakes - Parking

Type of control		Grip Handle
Location of control		Between Front Seats
Operates on		Rear Service Brakes
If separate from service brakes	Type (internal or external)	Not Applicable
	Drum diameter	---
	Lining size (length x width x thickness)	---

MVMA Specifications

Vehicle Line CAVALIER
Model Year 1995 Issued 9-94 Revised (•)

METRIC (U.S. Customary)

Model Code/Description And/Or Engine Code/Description

ALL

Steering

Manual (std., opt., n.a.)				Not Applicable
Power (std., opt., n.a.)				Standard
Speed-sensitive (std., opt., n.a.)				
4-wheel steering (std., opt., n.a.)				
Adjustable steering wheel/column (tilt, telescope, other)		Type		Tilt
		Manufacturer		Saginaw Division
		(std., opt., n.a.)		Optional
Wheel diameter** (W9) SAE J1100		Manual		None
		Power		
Turning diameter m (ft.)	Outside front	Wall to wall (l. & r.)		
		Curb to curb (l. & r.)		10.85 (35.6)
	Inside rear	Wall to wall (l. & r.)		
		Curb to curb (l. & r.)		
Scrub Radius*				-4.23 (14" Tires)
Manual	Gear	Type		Not Applicable
		Manufacturer		
		Ratios	Gear	
			Overall	
	No. wheel turns (stop to stop)			
Power	Type (coaxial, elec. hyd., etc.)			Hydraulic
	Manufacturer			Saginaw Division
	Gear	Type		Rack & Pinion
		Ratios	Gear	--
			Overall	15.7:1 All
	Pump (drive)			Belt Off Crankshaft Pulley (LN2) Direct Drive Off Crankshaft (LD2)
	No. wheel turns (stop to stop)			2.88 All
Linkage	Type			End Take - Off Tie Rods, Rack & Pinion
	Location (front or rear of wheels, other)			Rear
	Tie rods (one or two)			2
Steering axis	Kingpin lination (deg.)			12.0°
	Bearings (type)	Upper		Ball Bearings
		Lower		Ball Joint
		Thrust		Incorportated In Upper Bearing
Steering spindle/knuckle & joint type				

* The horizontal distance in the front elevation between wheel centerline and kingpin (ball joint) axis at ground.
** See Page 23.

MVMA Specifications

ehicle Line CAVALIER
Model Year 1995 Issued 9-94 Revised (●)

METRIC (U.S. Customary)

Model Code/Description And/Or Engine Code/Description

ALL

Wheel Alignment

Front wheel at curb mass (wt.)	Service checking	Caster (deg.)	Not Adjustable
		Camber (deg.)	-.2° (+/-) .7 Cross Car Must Be Within 1.0
		Toe-in outside track mm (in.)	.10° (+/-) .20° Sum (0 mm (+/-) 1.5 mm) 0° +/- .2 (LD2/FE2 & Convertible)
	Service reset*	Caster (deg.)	Not Adjustable
		Camber (deg.)	-.2° (+/-) .7 Cross Car Must Be Within 1.0
		Toe-in mm (in.)	.10°(+/-) 20° Sum (0 mm (+/-) 1.5 mm) 0° +/- .2 (LD2/FE2 & Convertible)
	Periodic M.V. in-spection	Caster (deg.)	Not Adjustable
		Camber (deg.)	Not Adjustable
		Toe-in mm (in.)	Not Adjustable
Rear wheel at curb mass (wt.)	Service checking	Camber (deg.)	-.25° +/- .10°
		Toe-in outside track mm (in.)	.20° +/- .35°
	Service reset*	Camber (deg.)	Not Adjustable
		Toe-in mm (in.)	Not Adjustable
	Periodic M.V. insp.	Camber (deg.)	Not Adjustable
		Toe-in mm (in.)	Not Adjustable

* Indicates pre-set, adjustable, trend set or other.

Electrical - Instruments and Equipment

			BASE GAUGE
Speed-ometer	Type (analog, digital, std., opt.)		Analog Electric (Standard)
	Trip odometer (std., opt., n.a.)		Gage Only (Optional)
Head-up display	Standard, optional, not available		Not Available
	Type	Secondary, opto-electronic	Not Available
	Speedometer	Digital	Not Available
	Status/warning indicators	Turn signals, high beam, low fuel, check gauges	Not Available
	Brightness control	Day / night mode, adjustable	Not Available
EGR maintenance indicator			Not Available
Charge indicator	Type		Tell-Tale Warning Lamp
	Warning device (light, audible)		Lamp
Temperature indicator	Type		Gauge
	Warning device (light, audible)		Ck Gauge Light
Oil pressure indicator	Type		Tell-Tale Warning Lamp
	Warning device (light, audible)		Lamp
Fuel indicator	Type		Gauge
	Warning device (light, audible)		Ck Gauge Tell-Tale
Windshield wiper	Type (standard)		Electric 2-Speed w\ Fixed Delay Pulse
	Type (optional)		Pulse Wiper Variable Delay (CD4)
	Blade length		6890.0 (1068.0) CPE
	Swept area cm² (in.²)		6856.9 (1062.8) SDN
Windshield washer	Type (standard)		Elec. Pump Mtd On Reservoir Bottle, Wet Arm
	Type (optional)		None
	Fluid level indicator (light, audible)		None
Rear window wiper, wiper/washer (std., opt., n.a.)			Not Available
Horn	Type		Electro-Mechanical (Air Column)
	Number used		1 (F Note)
Other			(UH8) Uplevel Gage Cluster Includes, Tachometer, Tell-Tale Includes: Parking Brake and Brake Failure, Fasten Belt , Upshift, Check Engine, Low Coolant, High Beam, Left and Right Turn, ABS, Airbag, Check Oil, and Theft System

ications

istomary)

Vehicle Line CAVALIER
Model Year 1995 Issued 9-94 Revised (●) Revised (●)

2.3 LITER L4 (138 CID)
MULTI-PORT FUEL INJECTION RPO LD2

stem

r	
opt.)	Delco Remy
	bTD.
cold crank	12
ve capacity	600
hr. rate	90
	54
	Under Hood Front
x. rpm)	Delco Remy
/rev.)	42/105
pm, park)	2.56:1
rating)	52 Amps @ 93°C - 800 RPM
	None
	Integral to Alternator

em

°C (°F)	Delco Remy
hp)	375 Amps
	1.5 kw (2.01 hp.)
m (front, rear)	Solenoid Positive Shift
	Front

n

., n.a.)	Standard/Direct Ignition System
	None
	Delco Remy (2)
ine stopped - A	1103907
ine idling - A	300 MA
	Peak 8.25 Amps
	A/C
	41-900
(lb. ft.)	14 x 1.25
	10-20 (7-15)
	(1.52) (.060)
	1
	Not Applicable

ral Coils & 1 Remt. Timing Sen

MVMA Specifications

METRIC (U.S. Customary)

Vehicle Line: CAVALIER
Model Year: 1995 Issued: 9-94 Revised (•)

Engine Code/Description

2.3 LITER L4 (138 CID)
MULTI-PORT FUEL INJECTION RPO LD2

Electrical - Supply System

Battery	Manufacturer	Delco Remy
	Model, std., (opt.)	bTD.
	Voltage	12
	Amps at 0° F. cold crank	600
	Minutes-reserve capacity	90
	Amps/hrs.-20 hr. rate	54
	Location	Under Hood Front
Alternator	Manufacturer	Delco Remy
	Rating (idle/max. rpm)	42/105
	Ratio (alt. crank/rev.)	2.56:1
	Output at idle (rpm, park)	52 Amps @ 93°C - 800 RPM
	Optional (type & rating)	None
Regulator	Type	Integral to Alternator

Electrical - Starting System

Motor	Manufacturer	Delco Remy
	Current drain _____ °C (°F)	375 Amps
	Power rating kw (hp)	1.5 kw (2.01 hp.)
Motor drive	Engagement type	Solenoid Positive Shift
	Pinion engages from (front, rear)	Front

Electrical - Ignition System

Type	Electronic (std., opt., n.a.)		Standard/Direct Ignition System
	Other (specify)		None
Coil	Manufacturer		Delco Remy (2)
	Model		1103907
	Current	Engine stopped - A	300 MA
		Engine idling - A	Peak 8.25 Amps
Spark plug	Manufacturer		A/C
	Model		41-900
	Thread (mm)		14 x 1.25
	Tightening torque N·m (lb. ft.)		10-20 (7-15)
	Gap		(1.52) (.060)
	Number per cylinder		1
Distributor	Manufacturer		Not Applicable
	Model		

Electrical - Suppression

Locations & type	

MVMA Specifications

METRIC (U.S. Customary)

Vehicle Line: CAVALIER
Model Year: 1995 Issued: 9-94 Revised (•)

Model Code/Description	ALL

Body

Structure	Unitized Body Construction Including Front End Structure With Bolted - On Fenders And Hood
Bumper system front - rear	Bumper Fascias Are Attached To Steel Impact Bar And Guideflex Or EPP Foam Asborbers For Collision Energy Absorption Meets 5 MPH Corporate Bumper Labeling Requirements
Anti-corrosion treatment	The Paint Shop Process Includes Phosphate, ELPO, Sealers, Anti-Chip, Primers and Topcoat.

Body - Miscellaneous Information

Type of finish (lacquer, enamel, other)		High Or Low Solids Base Coat/ Clear Coat Emamel
Hood	Material & mass	Steel Z24/SMC
	Hinge location (front, rear)	Rear
	Type (counterbalance, prop)	Prop Rod - Single Pivot HInge
	Release control (internal, external)	Internal
Trunk lid	Material & mass	Steel/Sedan 10.5 (.41) Coupe 10.5 (.41)
	Type (counterbalance, other)	Torque Rods On Coupe And Sedan
	Internal release control (elec., mech., n.a.)	Mechanical (Optional)
Hatchback lid	Material & mass	
	Type (counterbalance, other)	
	Internal release control (elec., mech., n.a.)	
Tailgate	Material & mass	N/A
	Type (drop, lift, door)	N/A
	Internal release control (elec., mech., n.a.)	N/A
Vent window control (crank, friction, pivot, power)	Front	Not Applicable
	Rear	▪
Window regulator type (cable, tape, flex drive, etc.)	Front	▪
	Rear	▪
Seat cushion type (e.g., 60/40 bucket, bench, wire, foam, etc.)	Front	Foam
	Rear	Foam
	3rd seat	Not Applicable
Seat back type (e.g., 60/40 bucket, bench, wire, foam, etc.)	Front	Foam
	Rear	Foam
	3rd seat	Not Applicable

Frame

Type and description (separate frame, unitized frame, partially-unitized frame)	Unitized Frame

MVMA Specifications

Vehicle Line: CAVALIER
Model Year: 1995 Issued: 9-94 Revised (●):

METRIC (U.S. Customary)

Model Code/Description: ALL

Restraint System

Seating Position			Left	Center	Right
Active	Type & description (lap & shoulder belt, lap belt, etc.) Standard / Optional	First seat	Lap/Shoulder Belt	N/A	Lap/Shoulder Belt
		Second seat	Lap/Shoulder Belt Combination	Lap Belt	Lap/Shoulder Belt Combination
		Third seat			
Passive	Type & description (air bag, motorized-2-point belt, fixed belt, knee bolster, manual-lap belt) Standard / Optional	First seat	Air Bag - Knee Bolster		Air Bag - Knee Bolster
		Second seat			
		Third seat			

Glass	SAE Ref.No.	37	67	69
Windshield glass exposed surface area cm² (in.²)	S1	10,940 cm2	10,940 cm2	11,400 cm2
Side glass exposed surface area cm² (in.²) - total 2 sides	S2	11,144 cm2	10,262 cm2	11,684 cm2
Backlight glass exposed surface area cm² (in.²)	S3	10,650 cm2	2887 cm2	8873 cm2
Total glass exposed surface area cm² (in.²)	S4	32,734 cm2	24,089 cm2	31,957 cm2
Windshield glass (type/thickness)		Curved-Laminated Float 5.4 mm	Curved-Laminated Float 5.4 mm	Curved Laminated Float 5.4 mm
Side glass (type/thickness)		Curved-Tempered Float QTR WDO 3.5 mm Door Glass 4.0 mm	Curved-Tempered Float QTR WDO 5mm Door Glass 5 mm	Curved Laminated Float Door Glass 4.0 mm
Backlight glass (type/thickness)		Curved-Tempered Float 3.5 mm	Curved Temp. Float 3.5 mm	Curved Temp. 3.5 mm
Tinted (yes/no, location)		All Glass Tinted	All Glass Tinted	All Glass Tinted
Solar control (yes/no, coated/batched, location)				

Headlamps

Description (sealed beam, halogen, replaceable bulb, etc.)	Replacable Bulb - 2 Lamps - 2 Bulds Each
Shape	Rectangular
Lo-beam type (2A1, 2B1, 2C1, etc.)	HB4
Quantity	2 (High and Low Combination 2 Bulbs Per Car)
Hi-beam type (1A1, 2A1, 1C1, 2C1, etc.)	HB3
Quantity	2 (High and Low Combination 2 Bulbs Per Car)

MVMA Specifications

Vehicle Line CAVALIER
Model Year 1995 Issued 9-94 Revised (●)

METRIC (U.S. Customary)

Engine Code/Description ALL

Climate Control System

Air conditioning (std., opt., man., auto.)		Optional
Condenser	Type	Header Tube and Center
	Eff. face area (sq. mm.)	258,163.2
	Fins per inch	2.5 K
Evaporator	Type	3-5-5 Parrallel Rib S Flow
	Eff. face area (sq. mm.)	45,050
	Fins per inch	14
Heater core	Material	Aluminum
	Eff. face area (sq. mm.)	29,210
	Fins per inch	38
Compressor	Type	Five Cylinder - Variable Displacement
	Displacement (cc.)	9.5 cu. in. = 151 cc.
	Manufacturer	Harrison Division
	A/C pulley ratio	LD2 1.29:1 LN2 1.24:1
Accumulator	Type	Tapered Full - Size, Single "O" Ring R-134a
	Height (mm.)	8" = 206
	Diameter (mm.)	93.5 (Top Shell) 88.8 (Bottom Shell)
Receiver	Type	None
	Height (mm.)	None
	Diameter (mm.)	None
Refrigerant control (CCOT, TVS, etc.)		VSOT
Heater water valve (yes / no)		No
Refrigerant (R - 12, R - 134a, etc.)		R134a
Charge level (lbs. - oz.)		1.75
Cold engine lockout switch (yes / no)		No
Wide open throttle cutout switch (yes / no)		No

MVMA Specifications

Vehicle Line CAVALIER
Model Year 1995 Issued 9-94 Revised (•)

METRIC (U.S. Customary)

Model Code/Description ALL

Convenience Equipment (standard, optional, n.a.)

Clock (digital, analog)		Part of Radio Package
Compass / thermometer		N/A
Console (floor, overhead)		(DO6) Standard
Defroster, electric windshield		N/A
Defroster, electric backlight		(C49) Optional
Electronic	Diagnostic monitor (integrated, individual)	N/A
	Instrument cluster (list instruments)	(UH7) Standard, Speed , Fuel , Temp, Season Odo. (UW8) Optional, Speed, Tach, Fuel, Temp, Season And Trip Odo.
	Keyless entry	N/A
	Tripminder (avg. spd., fuel)	N/A
	Voice alert (list items)	N/A
	Other	Key Left In /Head Lights On/Warning - Standard
Fuel door lock (remote, key, electric)		Manual Fuel Door
Integrated Child Seating	Std./opt. & location in vehicle	N/A
	Number of occupants	N/A
	Occupant weight/height (min. & max.)	N/A
	Restraint system description (3 or 5-point belts/booster seat capability)	N/A
Lamps	Auto head on/off delay, dimming	N/A
	Cornering	N/A
	Courtesy (map, reading)	Center Dome Standard; Center Dome/Reading (OPT C95)
	Door lock, ignition	N/A
	Engine compartment	N/A
	Fog	(N/A - Base) STD on JF37
	Glove compartment	Standard
	Trunk	Standard
	Illuminated entry system (list lamps, activation)	Courtesy, Front Door Handle Activated - Standard
	Other	N/A
Mirrors	Day / night (auto., man.)	Option (DC4) is Standard w/CF5
	L.H. (remote, power, heated)	Standard (D35), Optional (DG7), N/A
	R.H. (convex, remote, power, heated)	Standard (D35) Rh Manual, Optional (DG7), N/A
	Visor vanity (RH / LH, illuminated)	Standard No Mirror; Optional RH/LH No Light Standard. No Mirror (Base Vehicles) (Opt DD2) Standard (DD2) (JF Styles) L & R Side Covered No Lamps
Navigation system (describe)		N/A
Parking brake-auto release (warning light)		Standard - Manual Release

MVMA Specifications

METRIC (U.S. Customary)

Vehicle Line: CAVALIER
Model Year: 1995 Issued: 9-94 Revised (•)

Model Code/Description: ALL

Convenience Equipment (standard, optional, n.a.)

Power equipment	Deck lid (release, pull down)		(A59) Optional Manual Release (Standard on Uplevel)
	Door locks (manual, automatic, describe system)		(AU4) Standard Automatic Door Lock/Unlock (AU3) Optional Electric
	Seats	2 - 4 - 6 way, etc.	N/A
		Reclining (R.H., L.H.)	N/A
		Memory (R.H.,L.H., preset recline)	N/A
		Support (lumbar, hip, thigh, etc.)	N/A
		Heated (R.H., L.H., other)	N/A
	Side windows		
	Vent windows		(A31) Optional
	Rear windows		N/A
			N/A
Radio systems	Antenna (location, whip, w/shield, power)		
	Standard	AM, FM, stereo, tape, compact disc, graphic equalizer, theft deterrent, radio prep package, headphone jacks, etc.	(US6) Standard Fixed RH Rear Fender (U74) Antenna Delete Std. on JC
	Optional		(UL5) Radio Delete Std. On Base Coupe/Sedan Only (UM7) AM/FM Stereo, Seek/Scan, Clock & ETR (Std. on JF) (Opt. on JC)
			(UM6) AM/FM Stereo, Seek/Scan, Clock, ETR & Cassette (U1C) AM/FM Stereo, Seek/Scan, Clock & Compact Disc
	Speaker (number, location)		(UQ9) Speaker Delete (Std. on JC) (UX7) Standard 4, Duel Front Door Mtd. Dual Rear Shelf (Std. JF Only)
Roof: open air or fixed (flip-up, sliding, "T")			(AD3) Optional Hinged Coupe Only
Speed control device			(K34) Optional
Speed warning device (light, buzzer, etc.)			N/A
Tachometer (rpm)			(UH8) Standard JF
Telephone system (describe)			N/A
Theft deterrent system			Available JF37 Only w/MN4

Trailer Towing

Towing capable	Yes / No	Yes
Engine / transmission / axle	Std. / Opt.	LD2 Option w/ MN4 4-Speed Automatic
Tow class (I, II, III)*	Std. / Opt.	
Max. gross trailer wgt. (lbs.)	Std / Opt.	1000 lbs.
Max. trailer tongue load (lbs.)	Std. / Opt.	100 lbs.
Towing package available	Yes / No	No

* Class I - 2,000 lbs. Class II - 3,500 lbs. Class III - 5,000 lbs.

MVMA Specifications

Vehicle Line CAVALIER
Model Year 1995 Issued 9-94 Revised (•)

METRIC (U.S. Customary)
Vehicle Dimensions

See Key Sheets for definitions

All dimensions to ground are for comparative purposes only. Dimensions are to be shown for all base body models of each vehicle line.
SAE Ref. no. refers to the definition published in SAE Recommended Practice J1100 "Motor Vehicle Dimensions," unless otherwise specified.

Model Code/Description Width	SAE Ref. No.	COUPE	SEDAN	CONVERTIBLE
Tread (front)	W101	1462 (57.6)		
Tread (rear)	W102	1442 (56.8)		
Vehicle width	W103	1744 (68.7)	1725 (67.9)	1744 (68.7)
Body width at SgRP (front)	W117	1712 (67.4)	1710 (67.3)	1712 (67.4)
Vehicle width (front doors open)	W120	3844 (151.3)	3247 (127.8)	3844 (151.3)
Vehicle width (rear doors open)	W121	N/A	3520 (138.6)	N/A
Tumble-home (degrees)	W122	26.5°	29.0°	27.0°
Outside mirror width	W410	1916 (75.4)	1916 (75.4)	1916 (75.4)

Length

Wheelbase	L101	2644 (104.1)		
Vehicle length	L103	4580 (180.3)	4580 (180.3)	4580 (180.3)
Overhang (front)	L104	981.7 (38.6)	981.7 (38.6)	981.7 (38.6)
Overhang (rear)	L105	953.3 (37.5)	953.3 (37.5)	953.3 (37.5)
Upper structure length	L123	2781 (109.5)	2768 (108.9)	2766 (108.9)
Rear Wheel C/L "X" coordinate	L127	260 (10.2)	260 (10.2)	260 (10.2)

Height **

Passenger distribution (front/rear)	PD1 ,2,3	2/3		
Trunk/cargo load		0		
Vehicle height	H101	1351 (53.2)	1393 (54.8)	1369 (53.9)
Cowl point to ground	H114	916 (36.1)	916 (36.1)	914 (35.9)
Deck point to ground	H138	1020 (40.2)	1020 (40.2)	1024 (40.3)
Rocker panel-front to ground	H112	218 (8.6)	218 (8.6)	218 (8.6)
Rocker panel-rear to ground	H111	223 (8.8)	223 (8.8)	223 (8.8)
Windshield slope angle (degrees)	H122	63.0°	61.5°	63.0°
Backlight slope angle (degrees)	H121	71.0°	63.0°	67.0°

Ground Clearance **

Front bumper to ground	H102	245.4 (9.7)	265.1 (10.4)	244.5 (9.6)
Rear bumper to ground	H104	322.7 (12.7)	314.0 (12.4)	322.6 (12.7)
Bumper to ground front at curb mass (wt.)	H103	256.6 (10.1)	256.6 (10.1)	256.6 (10.1)
Bumper to ground rear at curb mass (wt.)	H105	341.8 (13.5)	341.8 (13.5)	341.8 (13.5)
Angle of approach (degrees)	H106	13.5°		
Angle of departure (degrees)	H107	15.5°		
Ramp breakover angle (degrees)	H147	13°		
Axle differential to ground (front/rear)	H153	N/A		
Min. running ground clearance	H156.	140 (5.5)		
Location of min. running ground clear.		Exhaust System		

** *All Vehicle Height And Ground Clearance Are Made Using EPA Loaded Vehicle Weight, Loading Conditions.*
EPA loaded vehicle weight is the base vehicle weight plus all coolant and fluids necessary for operation plus 100% of the fuel capacity, plus the weight of all options and accessories which weigh three pounds or more and which are sold on at least 33% of the car line, plus two occupants.

MVMA Specifications

Vehicle Line CAVALIER
Model Year 1995 Issued 9-94 Revised (●)

METRIC (U.S. Customary)
Vehicle Dimensions

See Key Sheets for definitions

Model Code/Description	SAE Ref. No.	COUPE	SEDAN	CONVERTIBLE
Front Compartment				
SgRP front, "X" coordinate	L31	3150 (124.0)	3150 (124.0)	3150 (124.0)
Effective head room	H61	956 (37.6)	989 (39.0)	968 (38.1)
Max. effective leg room (accelerator)	L34	1074 (42.3)	1073 (42.2)	1078 (42.4)
SgRP to heel point	H30	247 (9.7)	247 (9.7)	242 (9.5)
SgRP to heel point	L53	872 (34.3)	871 (34.3)	878 (34.6)
Back angle (degrees)	L40	25.5°	25.5°	25.5°
Hip angle (degrees)	L42	98.0°	98.0°	98.0°
Knee angle (degrees)	L44	128.0°	127.0°	128.5°
Foot angle (degrees)	L46	87.0°	87.0°	87.0°
Design H-point front travel	L17	208 (8.2)	208 (8.2)	208 (8.2)
Normal driving & riding seat track trvl.	L23	188 (7.4)	188 (7.4)	188 (7.4)
Shoulder room	W3	1368 (53.9)	1387 (54.6)	1368 (53.9)
Hip room	W5	1279 (50.4)	1290 (50.8)	1279 (50.4)
*** Upper body opening to ground	H50	1236 (48.6)	1271 (50.0)	1243 (49)
Steering wheel maximum diameter*	W9	375 (14.8)	375 (14.8)	375 (14.8)
Steering wheel angle (degrees)	H18	20.7°	20.7°	20.7°
Accel. heel pt. to steer. whl. cntr.	L11	481.7 (19.0)	481.7 (19.0)	488.7 (19.2)
Accel. heel pt. to steer. whl. cntr.	H17	633.3 (24.9)	633.3 (24.9)	627.2 (24.7)
Undepressed floor covering thickness	H67	13 (0.51)	13 (0.51)	21 (0.51)

Front Compartment Interior Dimensions are Measured with the Seating Reference Point (SgRP) _____ mm forward and _____mm Upward of Rearmost Position.

Rear Compartment				
SgRP point couple distance	L50	731 (28.8)	767 (30.2)	731 (28.8)
Effective head room	H63	929 (36.6)	946 (37.2)	955 (37.6)
Min. effective leg room	L51	832 (32.7)	874 (34.4)	829 (32.6)
SgRP (second to heel)	H31	253 (10.1)	268 (10.6)	248 (9.8)
Knee clearance	L48	1 (0.04)	22 (.87)	2 (.078)
Shoulder room	W4	1394 (54.9)	1370 (53.9)	1196 (47.1)
Hip room	W6	1258 (49.5)	1285 (50.6)	1214 (47.8)
*** Upper body opening to ground	H51	N/A	1293 (50.9)	N/A
Back angle (degrees)	L41	28.0°	28.0°	28.0°
Hip angle (degrees)	L43	81.0°	85.0°	80.5°
Knee angle (degrees)	L45	78.0°	85.5°	78.0°
Foot angle (degrees)	L47	119.0°	122.0°	120.0°
Depressed floor covering thickness	H73	22 (.86)	22 (.86)	27(1.06)

Luggage Compartment

Usable luggage capacity L (cu. ft.)	V1	379 (13.4 cu. ft.)	385 (13.6 cu. ft.)	
*** Liftover height	H195	672 (26.5)	672 (26.5)	704 (27.7)

Interior Volumes (EPA Classification)

Vehicle class	Subcompact	Compact
Interior volume index including trunk/cargo (cu. ft.)**	100.31 cu. ft.	105.7 cu. ft.
Trunk/cargo index (cu. ft.)	13.4	13.6

* See page 14.
** See definition page 33.
All linear dimensions are in millimeters (inches) unless otherwise noted.
***** EPA Loaded Vehicle Weight, Loading Conditions**

MVMA Specifications

Vehicle Line CAVALIER
Model Year 1995 Issued 9-94 Revised (●)

METRIC (U.S. Customary)
Vehicle Dimensions

See Key Sheets for definitions

Model Code/Description 2 DOOR NOTCH BACK

Station Wagon/MPV* -Third Seat

(NOT APPLICABLE)

	SAE Ref. No.	
Seat facing direction	SD1	
SgRP couple distance	L85	
Shoulder room	W85	
Hip room	W86	
Effective leg room	L86	
Effective head room	H86	
SgRP to heel point	H87	
Knee clearance	L87	
Back angle (degrees)	L88	
Hip angle (degrees)	L89	
Knee angle (degrees)	L90	
Foot angle (degrees)	L91	

Station Wagon/MPV* - Cargo Space

(NOT APPLICABLE)

Cargo length (open front)	L200	
Cargo length (open second)	L201	
Cargo length (closed front)	L202	
Cargo length (closed second)	L203	
Cargo length at belt (front)	L204	
Cargo length at belt (second)	L205	
Cargo width (wheelhouse)	W201	
Rear opening width at floor	W203	
Opening width at belt	W204	
Min. rear opening width above belt	W205	
Cargo height	H201	
Rear opening height	H202	
** Tailgate to ground height	H250	
Front seat back to load floor height	H197	
Cargo volume index m³ (ft.³)	V2	
Hidden cargo volume index m³ (ft.³)	V4	
Cargo volume index-rear of 2-seat	V10	
Cargo volume index*	V6	
Cargo width at floor*	W500	
Maximum cargo height*	H505	

Hatchback - Cargo Space

(NOT APPLICABLE)

Cargo length at front seatback height	L208	
Cargo length at floor (front)	L209	
Cargo length at second seatback height	L210	
Cargo length at floor (second)	L211	
Front seatback to load floor height	H197	
Second seatback to load floor height	H198	
Cargo volume index m³ (ft.³)	V3	
Hidden cargo volume index m³ (ft.³)	V4	
Cargo volume index - rear of 2-seat	V11	

All linear dimensions are in millimeters (inches) unless otherwise noted.
* MPV - Multipurpose Vehicle
** EPA Loaded Vehicle Weight, Loading Conditions

MVMA Specifications

Vehicle Line CAVALIER
Model Year 1995 Issued 9-94 Revised (•)

METRIC (U.S. Customary)

Model Code/ Description ALL

Vehicle Fiducial Marks

Fiducial Mark Number*		Define Coordinate Location
Front		X - Fiducial mark to vertical zero grid line - front measured horizontally, from the zero grid line to the front fiducial mark located on top of the front seat adjuster mounting bolt. Y - Fiducial mark to centerline of car - front, width measurement made from centerline car to fiducial mark located on top of the front seat adjuster mounting bolt. Z - Fiducial mark to horizontal zero grid line - front, measured vertically from zero grid line to front fiducial mark located on top of the front seat adjuster mounting bolt.
Rear		X - Fiducial mark to vertical zero grid line - rear, measured horizontally from the zero grid line to rear fiducial mark located on the rail (compartment pan - longitudinal.) Y - Fiducial mark to centerline of car - rear, width measurement made from centerline of car to fiducial mark located on the rail (compartment pan - longitudinal.) Z - Fiducial mark to horizontal zero grid line - rear, measured vertically from the zero grid line to rear fiducial mark located on the rail (compartment pan - longitudinal.)
NOTE: Provide 3 of 4 Fiducial Mark Locations		
Front	W21**	505 (19.8)
***	L54**	2761 (108.7)
***	H81**	251 (9.9)
	H161**	293.5 (11.6)
	H163**	278.7 (10.9)
Rear	W22**	440 (17.3)
***	L55**	4953 (195)
***	H82**	363 (14.3)
	H162**	417.6 (16.4)
	H164**	398.5 (15.7)

* Reference - SAE Recommended Practice, J182a, Motor Vehicle Fiducial Marks.
** Reference - SAE Recommended Practice J1100 - Motor Vehicle Dimensions.
*** EPA Loaded Vehicle Weight, Loading Conditions
All linear dimensions are in millimeters (inches) unless otherwise noted.

MVMA Specifications
METRIC (U.S. Customary)

Vehicle Line: CAVALIER
Model Year: 1995 Issued: 9-94 Revised (●):

Code	Model	VEHICLE MASS (WEIGHT) CURB MASS, kg. (lb.)* Front	Rear	Total	Shipping Mass kg (lb)***	ETWC** Code	% PASS MASS DISTRIBUTION Pass in Front Front	Rear	Pass in Rear Front	Rear
CAVALIER										
1JC37	2-Door Notchback Coupe	751	436	1187		Q				
		(1656)	(961)	(2617)						
1JC69	4-Door Notchback Sedan	760	446	1214		Q				
		(1693)	(983)	(2676)						
1JF67	2-Door Convertible	815	472	1287		S				
		(1797)	(1041)	(2838)						
1JF37	2-Door Notchback Coupe	799	466	1265		R				
		(1761)	(1027)	(2788)						
1JF69	4-Door Notchback Sedan	779	462	1241		R				
		(1717)	(1019)	(2736)						

* Reference - SAE J1100 Motor vehicle dimensions, curb weight definition.
** ETWC - Equivalent Test Weight Class - basis for U.S. Environmental Protection Agency emission certifications.
Refer to ETWC code legend below for test weight class.

ETWC LEGEND

A	= 1000	I	= 2000	Q	= 3000	Y	= 4000				
B	= 1125	J	= 2125	R	= 3125	Z	= 4250				
C	= 1250	K	= 2250	S	= 3250	AA	= 4500				
D	= 1375	L	= 2375	T	= 3375	BB	= 4750				
E	= 1500	M	= 2500	U	= 3500	CC	= 5000				
F	= 1625	N	= 2625	V	= 3625	DD	= 5250				
G	= 1750	O	= 2750	W	= 3750	EE	= 5500				
H	= 1875	P	= 2875	X	= 3875	FF	= 5750				

*** Shipping Mass (weight) = Curb Weight Less:

MVMA Specifications
METRIC (U.S. Customary)

Vehicle Line: CAVALIER
Model Year: 1995 Issued: 9-94 Revised (•)

Code	Equipment	Optional Equipment Differential Mass (weight)* MASS, kg. (lb.) Front	Rear	Total	Remarks Restrictions, Requirements
A31	Power Windows	1.0	1.8	2.8	1JC37, 1JF37, 1JF67
		(2.2)	(4.0)	(6.2)	
AF5	Seat Adj.	0.8	0.8	1.6	
		(1.8)	(1.8)	(3.6)	
A31	Power Windows	2.6	2.5	5.1	1JC69, 1JF69
		(5.7)	(5.5)	(11.2)	
C49	Defogger (Rear)	0.0	0.4	0.4	
		(0.0)	(0.9)	(0.9)	
B37	Mats, Front, & Rear	1.8	1.2	3.0	
		(4.0)	(2.6)	(6.6)	
BF9	Mats - Delete	-1.8	-1.2	-3.0	
		(-4.0)	(-2.6)	(-6.6)	
CF5	Elect. Sunroof	5.8	5.8	11.6	
		(12.8)	(12.8)	(25.6)	
A59	Remote Trunk Lock	0	1.0	1.0	
		0	(2.2)	(2.2)	
C60	Air Conditioning	15.0	0.0	15.0	
		(33.0)	(0.0)	(33.0)	
B84	Body Side Mldg.	1.0	1.2	2.2	
		(2.2)	(2.7)	(4.9)	
K34	Cruise Control	1.8	.0	1.8	
		(4.0)	(.0)	(4.0)	
CD4	Pulse Wiper	.2	0	.2	
		(.4)	(0)	(.4)	
LD2	Engine	66.0	-16.0	50.0	
		(145.5)	(-35.3)	(110.2)	
DD2	Covered Sunshade	.2	0	.2	
		(.4)	(0)	(.4)	
K62	Generator (Dual Int. Fan)	1.0	0.5	1.5	Requires LD2
		(2.2)	(1.1)	(3.3)	
KO5	Engine Block Heater	.4	0	.4	
		(.9)	(0)	(.9)	
MD9	3 Spd. Auto. Trans.	24.6	-4.6	20.0	
		(54.2)	(-10.1)	(44.1)	

* Also see Engine - General Section for dressed engine mass (weight.)

MVMA Specifications
METRIC (U.S. Customary)

Vehicle Line CAVALIER
Model Year 1995 Issued 9-94 Revised (•)

Code	Equipment	Optional Equipment Differential Mass (weight)* MASS, kg. (lb.) Front	Rear	Total	Remarks Restrictions, Requirements
MJ1	Manual Trans.	-23.0	3.0	20.0	
		(50.7)	(6.6)	(44.1)	
N33	Tilt Steering Wheel	.8	.4	1.2	
		(1.8)	(0.9)	(2.7)	
QPD	195/65R15	1.0	1.0	2.0	
		(2.2)	(2.2)	(4.4)	
DG7	Mirror	0.8	0.0	0.8	
		(1.8)	(0.0)	(1.8)	
MN4	Auto Trans.	42.0	-6.0	36.0	
		(92.6)	(-13.2)	(79.4)	
PF7	Wheel	-1.1	-1.1	-2.2	
		(-2.4)	(-2.4)	(-4.8)	
UM6	Radio - Cass	.6	.2	.8	
		(1.3)	(.4)	(1.7)	
PG1	Wheel	0.9	0.9	1.8	
		(2.0)	(2.0)	(4.0)	
UM7	Radio	1.2	0.0	1.3	
		(2.6)	(0.0)	(2.6)	
U1C	Radio Seek/Scan	1.0	0	1.0	
		(2.2)	(0)	(2.2)	
UX7	Speakers	0.2	0.0	0.2	
		(0.4)	(0.0)	(0.4)	
VH4	Mud Flaps	0.4	0.4	0.8	
		(0.9)	(0.9)	(1.8)	
VK3	Lic. Plate Mount	1.0	-0.2	.8	
		(2.2)	(-0.4)	(1.8)	
W27	Appearance Pkg.	0.3	0.2	0.5	
		(0.7)	(0.4)	(1.1)	
AU3	Power Locks	0.6	1.0	1.6	1JC37, 1JF37, 1JF67
		(1.3)	(2.2)	(3.5)	
AU3	Power Locks	1.0	1.6	2.6	1JC69, 1JF69
		(2.2	(3.5)	(5.7)	

* Also see Engine - General Section for dressed engine mass (weight.)

Exterior Vehicle And Body Dimensions – Key Sheet

Exterior Width

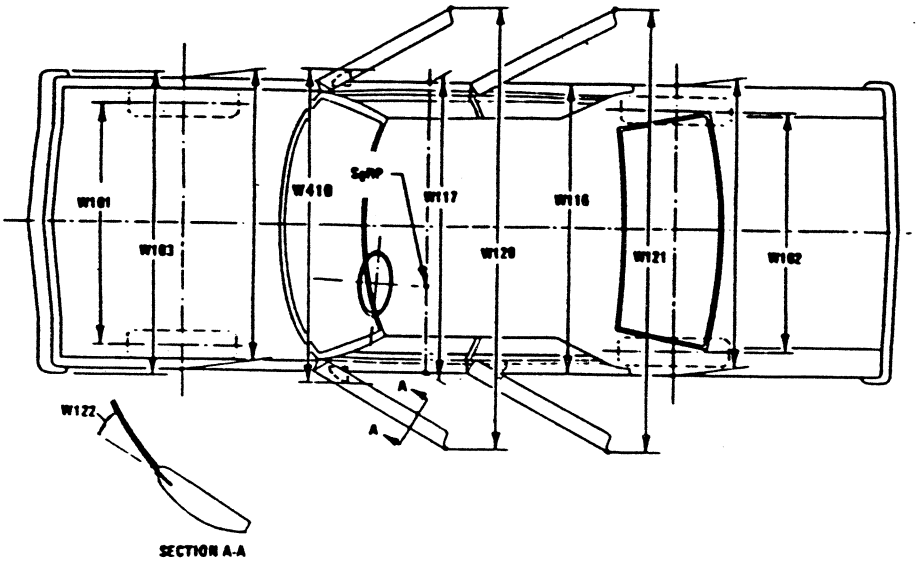

Exterior Length & Height

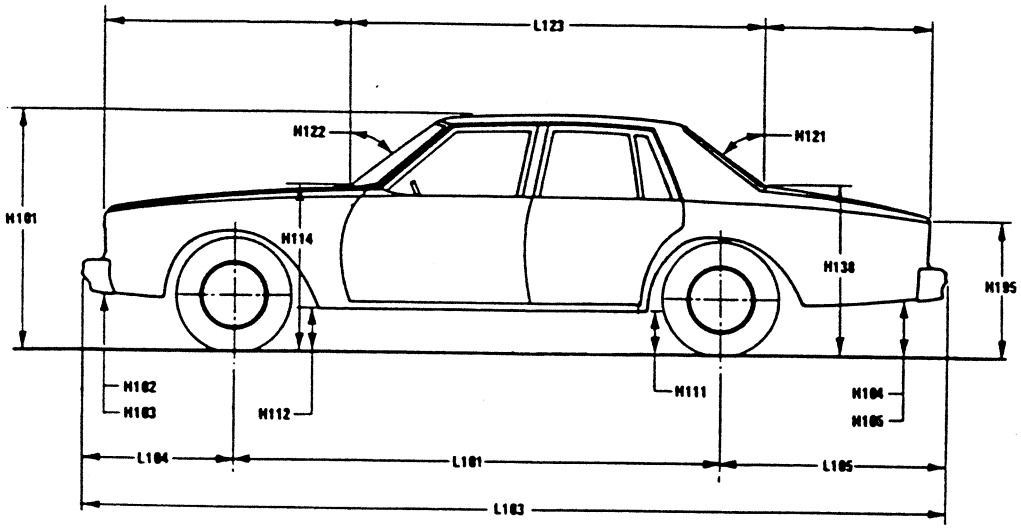

Exterior Ground Clearance

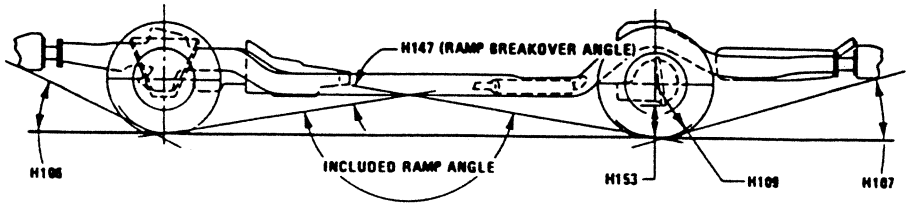

MVMA Specifications Form

METRIC (U.S. Customary)

Interior Vehicle And Body Dimensions – Key Sheet

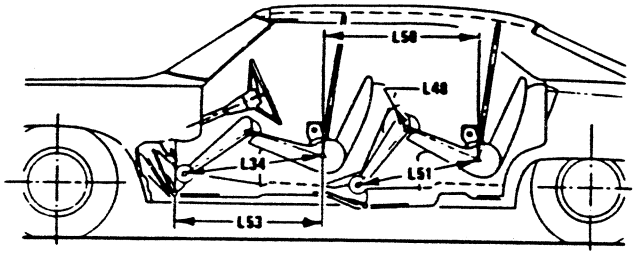

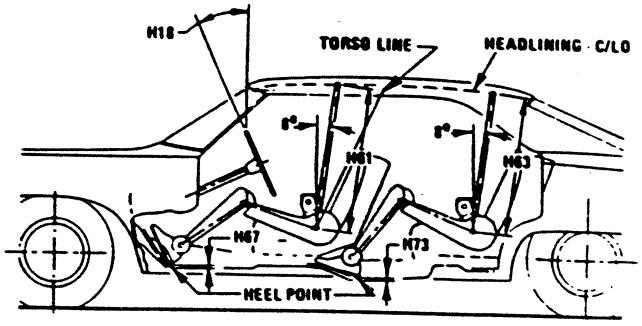

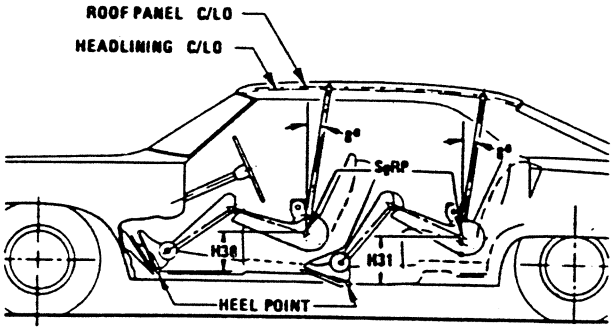

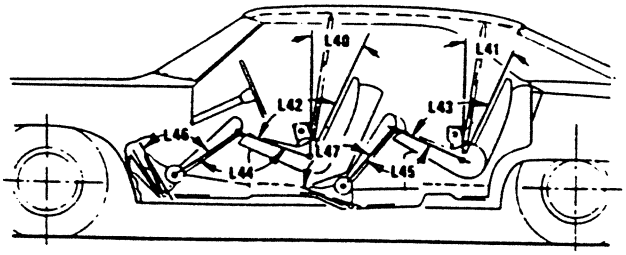

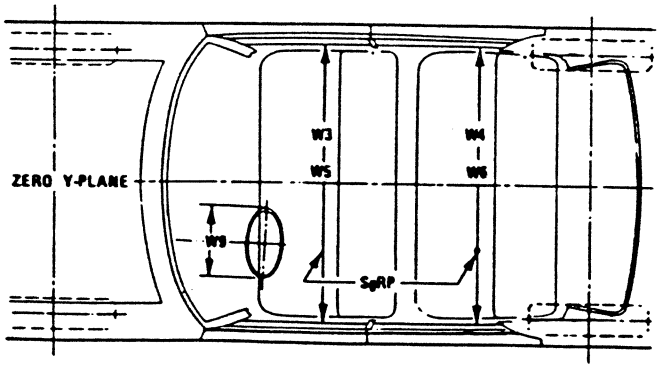

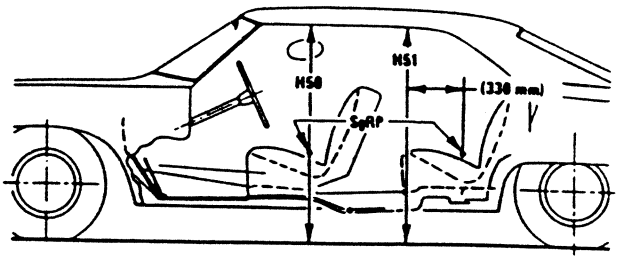

Interior Vehicle And Body Dimensions – Key Sheet

Third Seat

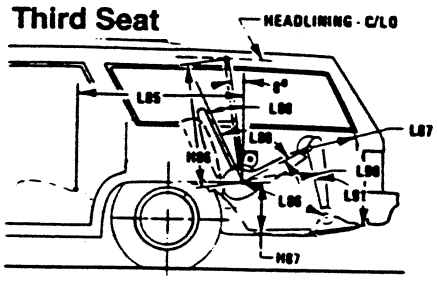

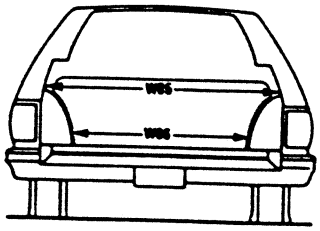

Cargo Space

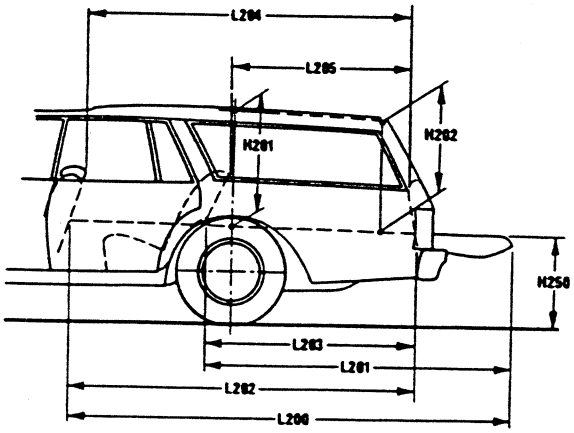

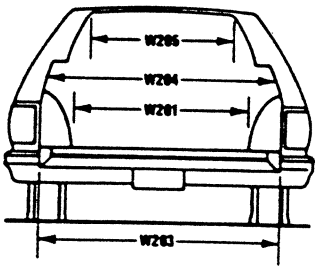

Station Wagon

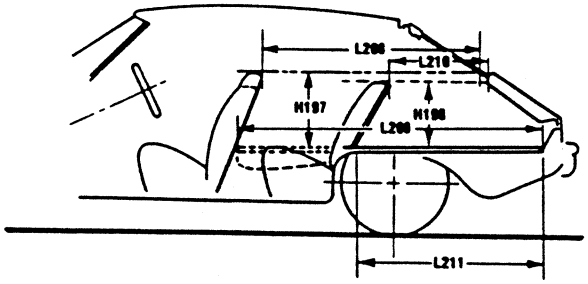

Hatchback

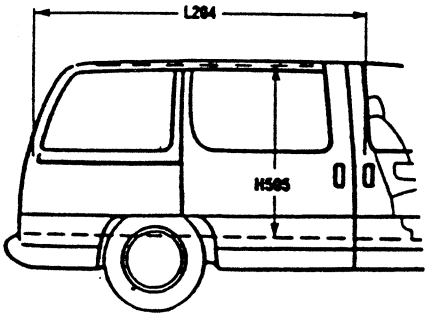

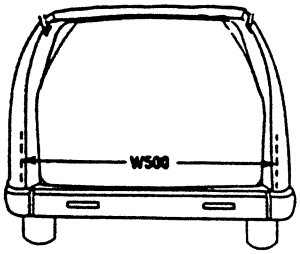

Multipurpose Vehicle

Exterior Vehicle And Body Dimensions – Key Sheet Dimensions Definitions

Seating Reference Point

SEATING REFERENCE POINT means the manufacturer's design reference point which –
(a) Establishes the rearmost normal design driving or riding position of each designated seating position in a vehicle;
(b) Has coordinates established relative to the design vehicle structure;
(c) Simulates the position of the pivot center of the human torso and thigh; and
(d) Is the reference point employed to position the two dimensional templates described in SAE Recommended Practice J826, "Devices for Use in Defining and Measuring Vehicle Seating Accommodations,".

Width Dimensions

W101 TREAD – FRONT. The dimension measured between the tire centerlines at the ground.

W102 TREAD – REAR. The dimension measured between the tire centerlines at the ground. In case of dual wheels, the dimension will be measured to the centerline of tire and wheel assemblies.

W103 VEHICLE WIDTH. The maximum dimension measured between the widest point on the vehicle, excluding exterior mirrors, flexible mud flaps, marker lamps, but including bumpers, moldings, sheet metal protrusions or dual wheels, if standard equipment.

W117 BODY WIDTH AT SgRP – FRONT. The dimension measured laterally between the widest points on the body at the SgRP-front, excluding door handles, applied moldings, or appliques.

W120 VEHICLE WIDTH – FRONT DOORS OPEN. The dimension measured between the widest point on the front doors in maximum hold-open position.

W121 VEHICLE WIDTH – REAR DOORS OPEN. The dimension measured between the widest point on the rear doors in maximum hold-open position. For vehicles with a rear door on only one side, this dimension is to the zero "Y" plane.

W122 TUMBLE – HOME. STRAIGHT SIDE GLASS. The angle measured from a vertical to the outside surface of the front door glass at the SgRP "X" plane.
CURVED SIDE GLASS. The angle measured from a vertical to a chord extending from the upper DLO to the lower DLO at the outside surface of the front door glass at the front SgRP "X" plane.

W410 OUTSIDE MIRROR WIDTH: The dimension between the widest point on the outside mirrors. The standard right and left mirror adjusted for normal driving will be shown unless otherwise noted. When only one outside mirror is standard, the dimension will be to the zero "Y" plane.

Length Dimensions

L101 WHEELBASE (WB). The dimension measured longitudinally between front and rear wheel centerlines. In case of dual rear axles, the dimension shall be to the midpoint of the centerlines of the rear wheels.

L103 VEHICLE LENGTH. The maximum dimension measured longitudinally between the foremost point and the rearmost point on the vehicle, including bumper, bumper guards, tow hooks and/or rub strips, if standard equipment.

L104 OVERHAND – FRONT. The dimension measured longitudinally from the centerline of the front wheels to the foremost point on the vehicle including bumper, bumper guards, tow hooks and/or rub strips, if standard equipment.

L105 OVERHANG – REAR. The dimension measured longitudinally from the centerline of the rear wheels; or in the case of dual rear axles, the dimension shall be the midpoint of the centerlines of the rear wheels, to the rearmost point on the vehicle including rear bumpers, bumper guards, tow hooks and rub strips, if standard equipment.

L123 UPPER STRUCTURE LENGTH. The dimension measured longitudinally from the cowl point to the deck point.

L127 REAR WHEEL CENTERLINE "X" COORDINATE or in the case of dual rear axles, the coordinate shall be the midpoint of the distance between the rear axle centerlines.

Height Dimensions

H101 VEHICLE HEIGHT. The dimension measured vertically from the highest point on the vehicle body to ground.

H111 ROCKER PANEL – REAR TO GROUND. The dimension measured vertically from the bottom of the rocker or side quarter panel at the front of the rear wheel opening, excluding flanges, to ground.

H112 ROCKER PANEL – FRONT TO GROUND. The dimension measured vertically from the foremost point on the bottom of the rocker panels, excluding flanges, to ground.

H114 COWL POINT TO GROUND. Measured at zero "Y" plane.

H121 BACKLIGHT SLOPE ANGLE. The angle between the vertical reference line and the surface of backlight at vehicle zero "Y" plane. For curve backlight, the angle is to chord of backlight arc from lower DLO to upper DLO.

H122 WINDSHIELD SLOPE ANGLE. The angle between the vertical reference line and a chord of the windshield arc running from the lower DLO to the upper DLO at the vehicle zero "Y" plane. In the case of wrap over glass, the angle to be measured will be formed by a chord 457 mm (18.0 in.) long drawn from the lower DLO to the intersecting point on the windshield.

H138 DECK POINT TO GROUND. Measured at zero "Y" plane.

H109 STATIC LOAD – TIRE RADIUS – REAR. Specified by the manufacturer in accordance with composite TIRE SECTION STANDARD.

Ground Clearance Dimensions

H102 FRONT BUMPER TO GROUND. The minimum dimension measured vertically from the lowest point on the front bumper to ground, including bumper guards, if standard equipment.

H103 FRONT BUMPER TO GROUND – CURB MASS (WT.). Measured in the same manner as H102.

H104 REAR BUMPER TO GROUND. The minimum dimension measured vertically from the lowest point on the rear bumper to ground, including bumper guards, if standard equipment.

H105 REAR BUMPER TO GROUND – CURB MASS (WT.). Measured in the same manner as H104.

H106 ANGLE OF APPROACH. The angle measured between a line tangent to the front tire static loaded radius arc and the initial point of structural interference forward of the front tire to ground. The limiting structural component shall be designated.

H107 ANGLE OF DEPARTURE. The angle measured between a line tangent to the rear tire static loaded radius arc and the initial point of structural interference rearward of the rear tire to ground. The limiting component shall be designated.

H147 RAMP BREAKOVER ANGLE. The angle measured between two lines tangent to the front and rear tire static loaded radius and intersecting at a point on the underside of the vehicle which defines the largest ramp over which the vehicle can roll.

H153 REAR AXLE DIFFERENTIAL TO GROUND. The minimum dimension measured from the rear axle differential to ground.

H156 MINIMUM RUNNING GROUND CLEARANCE. The minimum dimension measured from the sprung vehicle to ground. Specify location.

Interior Vehicle And Body Dimensions – Key Sheet Dimensions Definitions

Glass Areas

S1 Windshield area.
S2 Side windows area. Includes the front door, rear door, vents, and rear quarter windows on both sides of the vehicle.
S3 Backlight areas.
S4 Total area. Total of all areas (S1 + S2 + S3).

Fiducial Mark Dimensions

Fiducial Mark – Number 1

L54 "X" coordinate.
W21 "Y" coordinate.
H81 "Z" coordinate.
H161 Height "Z" coordinate to ground at curb weight.
H163 Height "Z" coordinate to ground.

Fiducial Mark – Number 2

L55 "X" coordinate.
W22 "Y" coordinate.
W82 "Z" coordinate.
H162 Height "Z" coordinate to ground at curb weight.
H164 Height "Z" coordinate to ground.

Front Compartment Dimensions

L11 ACCELERATOR HEEL POINT TO STEERING WHEEL CENTER. The dimension measured horizontally from the AHP to the intersection of the steering column centerline and a plane tangent to the upper surface of the steering wheel rim.

L17 DESIGN H-POINT – FRONT TRAVEL. The dimension measured horizontally between the design H-point – front in the foremost and rearmost seat track positions. (See SAE J1100)

L23 NORMAL DRIVING AND RIDING SEAT TRACK TRAVEL. The dimension measured horizontally between a point on the design H-point travel line from the SgRP to the displaced point on the design H-point travel line with the seat moved to the foremost seat position, but not to include seat track travel used for purposes other than normal driving and riding positions. (See SAE J1100).

L31 SgRP – FRONT. "X" COORDINATED.

L34 MAXIMUM EFFECTIVE LEG ROOM – ACCELERATOR. The dimension measured along a line from the ankle pivot center to the SgRP – front plus 254 mm (10.0 in.) measured with right foot on the undepressed accelerator pedal. For vehicles with SgRP to heel (H30) greater than 18 in., the accelerator pedal may be depressed as specified by the manufacturer. If the accelerator is depressed, the manufacturer shall place foot flat on pedal and note the depression of the pedal.

L-40 BACK ANGLE – FRONT. The angle measured between a vertical line through the SgRP – front and the torso line. If the seatback is adjustable, use the normal driving and riding position specified by the manufacturer.

L-42 HIP ANGLE – FRONT. The angle measured between torso line and thigh centerline.

L44 KNEE ANGLE – FRONT. The angle measured between thigh centerline and lower leg centerline measured on the right leg.

L46 FOOT ANGLE – FRONT. The angle measured between the lower leg centerline and a line tangent to the ball and heel of the bare foot flesh line measured on the right leg. Ref SAE J826.

L53 SgRP – FRONT TO HEEL. The dimension measured horizontally from the SgRP – front to the accelerator heel point.

W3 SHOULDER ROOM – FRONT. The minimum dimension measured laterally between the trimmed surfaces on the "X" plane through the SgRP – front at height between the belt line and 254 mm (10.0 in.) above the SgRP – front, excluding the door assist strap and attaching parts.

W5 HIP ROOM – FRONT. The minimum dimension measured laterally between the trimmed surfaces on the "X" plane through the SgRP – front within 25 mm (1.0 in.) below and 76 mm (3.0 in.) above the SgRP – front and 76 mm (3.0 in.) fore and aft of the SgRP – front.

W9 STEERING WHEEL MAXIMUM OUTSIDE DIAMETER. Define if other than round.

H7 ACCELERATOR HEEL POINT TO THE STEERING WHEEL CENTER. The dimension measured vertically from the AHP – front to the intersection of the steering column centerline to a plane tangent to the upper surface of the steering wheel rim.

H18 STEERING WHEEL ANGLE. The angle measured from a vertical to the surface plane of the steering wheel.

H30 SgRP – FRONT TO HEEL. The dimension measured vertically from the SgRP – front to the accelerator heel point.

H50 UPPER BODY OPENING TO GROUND – FRONT. The dimension measured vertically from the trimmed body opening to the ground on the SgRP – front "X" plane.

H61 EFFECTIVE HEAD ROOM – FRONT. The dimension measured along a line 8 deg. rear of vertical from the SgRP – front to the headlining plus 102 mm (4.0in.).

H67 FLOOR COVERING THICKNESS – UNDEPRESSED – FRONT. The dimension measured vertically from the surface of the undepressed floor covering to the underbody sheet metal at the accelerator heel point.

Rear Compartment Dimensions

L-41 BACK ANGLE – SECOND. The angle measured between a vertical line through the SgRP – second and the torso line.

L43 HIP ANGLE – SECOND. The angle measured between torso line and thigh centerline.

L45 KNEE ANGLE – SECOND. The angle measured between thigh centerline and lower leg centerline.

L47 FOOT ANGLE – SECOND. The angle measured between the lower leg centerline and a line tangent to the ball and heel of the three-dimensional devices bare foot flesh line (Reference J826).

L48 KNEE CLEARANCE – SECOND. The minimum dimension measured from the knee pivot center to the back of the front seatback minus 51 mm (2.0 in.).

L50 SgRP COUPLE DISTANCE – SECOND. The dimension measured horizontally from the driver SgRP – front to the SgRP – second.

L51 MINIMUM EFFECTIVE LEG ROOM – SECOND. The dimension measured along a line from the ankle pivot center to the SgRP – second plus 254 mm (10.0 in.).

W4 SHOULDER ROOM – SECOND. The minimum dimension measured laterally between door or quarter trimmed surfaces on the "X" plane through the SgRP – second at height between 254-406 mm (10.0-16.0 in.) above the SgRP – second, excluding the door assist straps and attaching parts.

W6 HIP ROOM – SECOND. Measured in the same manner as W5.

H31 SgRP – SECOND TO HEEL. The dimension measured vertically from the SgRP – second to the two dimensional device heel point on the depressed floor covering.

H51 UPPER BODY OPENING TO GROUND – SECOND. The dimension measured vertically from the trimmed body opening to the ground on the "X" plane 330 mm (13.0 in.) forward of the SgRP – second.

H63 EFFECTIVE HEAD ROOM – SECOND. The dimension measured along a line 8 deg. rear of vertical from the SgRP to the headlining, plus 102 mm (4.0 in.).

H73 FLOOR COVERING – DEPRESSED – SECOND. The dimension measured vertically from the heel point to the underbody sheet metal.

MVMA Specifications

METRIC (U.S. Customary)

Interior Vehicle And Body Dimensions – Key Sheet Dimensions Definitions

Luggage Compartment Dimensions

V1 USABLE LUGGAGE CAPACITY – Total of volumes of individual pieces of standard luggage set plus H-boxes stowed in the luggage compartment in accordance with the procedure described in paragraph 8.2 of SAE-J1100a.

Interior Volumes (EPA Classification)

The Interior Volume Index is listed for each body style except two seaters. The Interior Volume Index estimates the space in a car. It is based on four measurements – head room, shoulder room, hip room, and leg room – for the front and rear seats, plus trunk capacity.

The Trunk/Cargo Index is an estimate of the size of the trunk/cargo space. In station wagons and hatchbacks it is an estimate of the space behind the second seat.

Station Wagon / MPV – Third Seat Dimensions

L85 SgRP COUPLE DISTANCE – THIRD. The dimension measured horizontally from the SgRP – second to the SgRP – third.

L86 EFFECTIVE LEG ROOM – THIRD. The dimension measured along a line from the ankle pivot center to the SgRP – third plus 254 mm (10.0 in.).

L87 KNEE CLEARANCE – THIRD. The minimum dimension from the knee pivot center to the back of second seatback minus a constant of 51 mm (2.0 in.). With rear-facing third seat, dimension is measured to closure.

L88 BACK ANGLE – THIRD. Measured in the same manner as L41.

L89 HIP ANGLE – THIRD. Measured in the same manner as L43.

L90 KNEE ANGLE – THIRD. Measured in the same manner as L45

L91 FOOT ANGLE – THIRD. Measured in the same manner as L47.

W85 SHOULDER ROOM – THIRD. Measured in the same manner as W4.

W86 HIP ROOM – THIRD. Measured in the same manner as W5.

H86 EFFECTIVE HEAD ROOM – THIRD. The dimension, measured along a line 8 deg. from the SgRP – third to the headlining rear of vertical plus a constant of 102 mm (4.0 in.).

H87 SgRP – THIRD TO HEEL POINT.

SD1 SEAT FACING DIRECTION – THIRD.

Station Wagon / MPV – Cargo Space Dimensions

L200 CARGO LENGTH – OPEN – FRONT. The minimum dimension measured longitudinally from the back of the front seatback at the height of the undepressed floor covering to the rearmost point on the undepressed floor covering on the open tailgate or cargo surface if the rear closure is a conventional door type tailgate at the zero "Y" plane.

L201 CARGO LENGTH – OPEN – SECOND. The dimension measured longitudinally from the back of the second seatback at the height of the undepressed floor covering to the rearmost point on the undepressed floor covering on the open tailgate or cargo floor surface if the rear closure is a conventional door type tailgate, at the zero "Y" plane.

L202 CARGO LENGTH – CLOSED – FRONT. The minimum dimension measured horizontally from the back of the front seat at the height of the undepressed floor covering to the rearmost point on the undepressed floor covering on the closed tailgate or taildoor for station wagons, trucks and mpv's at the zero "Y" plane.

L203 CARGO LENGTH – CLOSED – SECOND. The dimension measured horizontally from the back of the second seat at the height of the undepressed floor covering to the rearmost point on the undepressed floor covering on the closed tailgate or taildoor for station wagons, trucks and mpv's at the zero "Y" plane.

L204 CARGO LENGTH AT BELT – FRONT. The minimum dimension measured horizontally from the back of the front seatback at the seatback top to the foremost normal surface of the closed tailgate or inside surface of the cab backpanel at the height of the belt, on the zero "Y" plane.

L205 CARGO LENGTH AT BELT – SECOND. The minimum dimension measured horizontally from the back of the second seatback at the seatback top to the foremost normal surface of the closed tailgate at the height of the belt, on the zero "Y" plane.

W201 CARGO WIDTH – WHEELHOUSE. The minimum dimension measured laterally between the trimmed wheelhousings at floor level. For any vehicle not trimmed, measure to the sheet metal.

W203 REAR OPENING WIDTH AT FLOOR. The minimum dimension measured laterally between the limiting interferences of the rear opening at floor level.

W204 REAR OPENING WIDTH AT BELT. The minimum dimension measured laterally between the limiting interferences of the rear opening at belt height or top of pick up box.

W205 REAR OPENING WIDTH ABOVE BELT. The minimum dimension measured laterally between the limiting interferences of the rear opening above the belt height.

W500 CARGO WIDTH AT FLOOR. The maximum dimension measured laterally between the limiting interferences at the floor level. This dimension shall include ribs and pillars, but will exclude wheelhouses.

H197 FRONT SEATBACK TO LOAD FLOOR HEIGHT. The dimension measured vertically from the horizontal tangent to the top of the seatback to the undepressed floor covering.

H201 CARGO HEIGHT. The dimension measured vertically from the top of the undepressed floor covering to the headlining at the rear wheel "X" coordinate on the zero "Y" plane.

H202 REAR OPENING HEIGHT. The dimension measured vertically from the top of the undepressed floor covering to the upper trimmed opening on the zero "Y" plane with rear door fully open.

H250 TAILGATE TO GROUND CURB MASS (WT.). The dimension measured vertically from the top of the undepressed floor covering on the lowered tailgate to ground on the zero "Y" plane.

H505 MAXIMUM CARGO HEIGHT. The maximum vertical dimension rear of the front seat from the cargo floor to roof bow or headlining at the zero "Y" plane.

Interior Vehicle And Body Dimensions – Key Sheet Dimensions Definitions

V2 STATION WAGON

Measured in inches:

$$\frac{W4 \times H201 \times L204}{1728} = ft^3$$

Measured in mm:

$$\frac{W4 \times H201 \times L204}{10^9} = m^3 \text{ (cubic meter)}$$

V4 HIDDEN LUGGAGE CAPACITY – REAR OF FRONT SEAT. The total volumes of individual pieces of one set of standard luggage stowed in any hidden cargo area below the load floor rear of the front seat.

V5 TRUCKS AND MPV'S WITH OPEN AREA.

Measured in inches:

$$\frac{L506 \times W505 \times H503}{1728} = ft^3$$

Measured in mm:

$$\frac{L506 \times W500 \times H503}{10^9} = m^3 \text{ (cubic meter)}$$

V6 TRUCKS AND MPV'S WITH CLOSED AREA.

Measured in inches:

$$\frac{L204 \times W500 \times H505}{1728} = ft^3$$

Measured in mm:

$$\frac{L204 \times W500 \times H505}{10^9} = m^3 \text{ (cubic meter)}$$

V8 HIDDEN LUGGAGE CAPACITY – REAR OF SECOND SEAT. The total volume of individual pieces of one set of standard luggage stowed in any hidden cargo area below the load floor rear of the second seat.

V10 STATION WAGON CARGO VOLUME INDEX.

Measured in inches:

$$\frac{H201 \times L205 \times \frac{W4 + W201}{2}}{1728} = ft^3$$

Measured in mm:

$$\frac{H201 \times L205 \times \frac{W4 + W201}{2}}{10^9} = m^3 \text{ (cubic meter)}$$

Hatchback – Cargo Space Dimensions

All hatchback cargo dimensions are to be taken with the front seat in full down and rear position, and the rear seat folded down. The hatchback door is in the closed position. (For electronically adjusted seats, see the manufacturer's specifications for Design "H" Point).

L208 CARGO LENGTH AT FRONT SEATBACK HEIGHT. The minimum horizontal dimension from the "X" plane tangent to the rearmost surface of the driver's seatback to the inside limiting interference of the hatchback door on the vehicle zero "Y" plane.

L209 CARGO LENGTH AT FLOOR – FRONT. The minimum horizontal dimension measured at floor level from the rear of the front seatback to the normal limiting interference of the hatchback door on the vehicle zero "Y" plane.

L210 CARGO LENGTH AT SECOND SEATBACK HEIGHT. The minimum dimension measured from the "X" plane tangent to the rearmost surface of second seatback or the load floor which is stowed at least one half of the H198 dimension height above the rear load floor, to the rearmost inside limiting interference on the zero "X" plane.

L211 CARGO LENGTH AT FLOOR – SECOND SEATBACK. The minimum horizontal dimension measured at floor level from the rear of the second seatback or load floor panel to the normal limiting interference of the hatchback door on the vehicle zero "Y" plane.

H197 FRONT SEATBACK TO LOAD HEIGHT. The dimension measured vertically from the horizontal tangent to the top of the seatback to the undepressed floor covering.

H198 SECOND SEATBACK TO LOAD FLOOR HEIGHT: The dimension measured vertically from the second seatback to the undepressed floor covering.

V3 HATCHBACK.

Measured in inches:

$$\frac{\frac{L208 + L209}{2} \times W4 \times H197}{1728} = ft^3$$

Measured in mm:

$$\frac{\frac{L208 + L209}{2} \times W4 \times H197}{10^9} = m^3 \text{ (cubic meter)}$$

V4 HIDDEN LUGGAGE CAPACITY – REAR OF FRONT SEAT. The total volumes of individual pieces of one set of standard luggage stowed in any hidden cargo area below the load floor rear of the front seat.

V11 HATCHBACK CARGO VOLUME INDEX. Usable luggage (one (1) stand and luggage set) below floor:

Measured in inches:

$$\frac{\frac{L210 + L211}{2} \times W4 \times H198}{1728} = ft^3$$

Measured in mm:

$$\frac{\frac{L210 + L211}{2} \times W4 \times H198}{10^9} = m^3 \text{ (cubic meter)}$$

MVMA Specifications

METRIC (U.S. Customary)

Index

Subject	Page No.
Alternator	16
Axle Drive, Front, Rear, All Four	2, 9, 10
Axle Shafts	10
Battery	16
Body and Miscellaneous Information	17
Brakes – Parking Service	12, 13
Camber	15
Camshaft	3
Capacities	
Cooling System	5
Fuel Tank	6
Lubricants	
Engine Crankcase	4
Transmission / Transaxle	8, 9
Rear Axle	10
Carburetor	2, 6
Caster	15
Climate Control System	19
Clutch – Pedal Operated	8
Coil, Ignition	16
Connecting Rods	4
Convenience Equipment	20-21
Cooling System	5
Crankshaft	4
Cylinders and Cylinder Head	3
Diesel Information	4
Dimension Definitions	
Key Sheet – Exterior	28, 31, 32
Key Sheet – Interior	29, 30, 32, 33, 34
Electrical System	15, 16
Emission Controls	7
Engine – General	
Bore, Stroke, Type	3
Compression Ratio	2
Displacement	2, 3
Firing Order, Cylinder Numbering	3
General Information, Power & Torque	2
Intake System	4
Power Teams	2
Exhaust System	7
Equipment Availability, Convenience	20
Fan, Cooling	5
Filters – Engine Oil, Fuel System	4
Four Wheel Drive	10
Frame	17
Front Suspension	11
Front Wheel Drive Unit	10
Fuel Economy, EPA	1
Fuel Injection	6
Fuel System	6
Fuel Tank	6
Glass	18
Headlamps	18
Headroom – Body	23, 24
Heights	22
Horns	15
Horsepower – Brake	2
Ignition System	16
Inflation – Tires	13
Interior Volumes	23
Instruments	15
Legroom	23, 24
Lengths	22
Leveling, Suspension	11
Lifters, Valve	4
Linings – Clutch, Brake	8, 12
Lubrication – Engine Transmission / Transaxle	4, 8, 9
Luggage Compartment	23
Models	1
Motor Starting	16
Muffler	7
Origin	1
Passenger Capacity	1
Passenger Mass Distribution	26
Pistons	3
Power Brakes	12
Power, Engine	2
Power Steering	14
Power Teams	2
Propeller Shaft	10
Pumps – Fuel	6
Water	5
Radiator – Cap, Hoses, Core	5
Ratios – Axle, Transaxle	2, 9, 10
Compression	2
Steering	14
Transmission / Transaxle	2, 8, 9
Rear Axle	2, 10
Regulator – Alternator	16
Restraint System	18
Rims	13
Rods – Connecting	4
Scrub Radius	14
Seats	17
Shock Absorbers, Front & Rear	11
Spark Plugs	16
Speedometer	15
Springs – Front & Rear Suspension	11
Stabilizer (Sway Bar) – Front & Rear	11
Starting System	16
Steering	14
Suppression – Ignition, Radio	16
Suspension – Front & Rear	11
Tail Pipe	7
Theft Protection	21
Thermostat, Cooling	5
Tires	13
Toe-In	15
Torque Converter	9
Torque – Engine	2, 8, 9
Trailer Towing	21
Transaxle	9
Transmission – Types	2, 8, 9
Transmission – Automatic	2, 9
Transmission – Manual	2, 8
Transmission – Ratios	2, 8, 9
Tread	22
Trunk Cargo Load	1
Trunk Luggage Capacity	23
Turning Diameter	14
Unitized Construction	18
Universal Joints, Propeller Shaft	10
Valve System	4
Vehicle Dimensions	
Width	22
Length	22
Height	22
Ground Clearance	22
Front Compartment	23
Rear Compartment	23
Luggage Compartment	23
Station Wagon – Third Seat	24
Station Wagon – Cargo Space	24
Hatchback – Cargo Space	24
Fiducial Marks	25
Voltage Regulator	16
Water Pump	5
Weights	26, 27
Wheel Alignment	15
Wheelbase	22
Wheels & Tires	13
Wheel Spindle	14
Widths	22
Windshield	18
Windshield Wiper and Washer	15