Chevrolet

Silverado Classic
&
Silverado HD Classic



2007

Note: While this restoration kit may mention the Silverado Hybrid model in various places and includes some information on the hybrid systems used in the vehicle, it is not intended for use with that model. Chevrolet does not produce a restoration kit for the hybrid model Silverado.

Because of the high-energy nature of the hybrid system used in the Silverado, the vehicle should only be work on by a qualified mechanic.

Table of Contents

Product Information 1
2007 Chevy Silverado Classic Paves Way for All-New Models 1
VortecMAX Performance Package 1
Silverado SS Classic 1
Silverado Hybrid Classic 1
Silverado Classic lineup 2
Silverado Classic safety 2
Silverado Classic entertainment 2
Z71 Off-Road Package 3
Silverado Classic Heavy Duty 3
Duramax 6.6L turbo-diesel 3
New For 2007 3
Model Lineup – Silverado Classic 1500 4
Model Lineup – Silverado Classic 2500HD & 3500 Series 5
Specifications – Silverado 1500 Classic 6
Engines 6
Engines (Continued) 7
Estimated Fuel Economy 8
Transmissions 8
Chassis/Suspension 9
Brakes 9
Wheels/Tires 10
Wheel size & type: 10
Tires: 10
Dimensions 10
Exterior 10
Base Curb Weight & Payload 12
2WD pickups:* 12
4WD pickups:* 12
Cargo box 12
Interior 13
Capacities 13
Specifications – Silverado 2500 & 3500 HD Classic 14
Overview 14
Engines 14
Transmissions 15
Chassis/Suspension 15
Brakes 15
Wheels/Tires 16
Dimensions 16
Exterior 16
Cargo box 17
Interior 18
Capacities 18
Vehicle Identification 19
Vehicle Identification Number (VIN) 19
VIN Derivative 20
Engine ID and VIN Derivative Location 21
4.3L V-6 Engine 21
4.8L, 5.3L, 6.0L V-8 Engines 23
8.1L V-8 Engine 24
6.6L Diesel Engine 25
Engine ID Legend 26
Transmission ID and VIN Derivative Location 27

4L60-E Transmission ID Location 27
Bar Code Label Contents(c) 28
4L80-E Transmission ID Location 29
5-Speed Getrag 30
5-Speed Manual 31
Allison Transmission 32
Nameplate Location 32
Nameplate Components with Ten Group Spaces(c) 32
Nameplate Components with Twelve Group Spaces(c) 33
ZF Transmission 34
Transfer Case Identification 35
Axle Identification – Front 36
Axle Identification – Rear 37
Label - Vehicle Certification, Tire Place Card, Anti-Theft and Service Parts ID 38
Vehicle Certification Label 38
Tire Placard 39
Service Parts ID Label 39
Anti-Theft Label 39
RPO Code List 40
Light Duty 40
Heavy Duty 44
Technical Information 49
Maintenance and Lubrication 49
Capacities - Approximate Fluid 49
Axle Capacities 49
Cooling System 49
Engine Oil with Filter 49
Fuel Tank 49
Transfer Case 49
Transmission 50
Maintenance Items – Gasoline Engine 50
Engine Air Cleaner/Filter 50
Oil Filter 50
Spark Plugs 50
Wiper Blades (ITTA Type) 50
Fluid and Lubricant Recommendations – Gasoline Engine 50
Maintenance Items – Diesel Engine 52
Fluid and Lubricant Recommendations – Diesel Engine 52
GM Oil Life System - Resetting 53
Descriptions and Operations 54
Power Steering System 54
Without Electro-Hydraulic Steering 54
With Electro-Hydraulic Steering 55
EHPS Module 55
Steering Linkage (Non-Rack and Pinion) 57
Steering Wheel and Column 57
Vehicle Steering 57
Vehicle Security 57
Driver Convenience 57
Driver Safety 57
Suspension Description and Operation 58
Front Suspension 58
Coil Spring 58
Torsion Bar 58
Rear Suspension 59
Selectable Ride Description and Operation 59

Wheels and Tires 59
Tire Pressure Monitor Description and Operation 59
Fastener Tightening Specifications 60
General Description 60
Tread Wear Indicators Description 60
Metric Wheel Nuts and Bolts Description 61
Tire Inflation Description 61
Tire Description 62
Conditions for Tire Replacement 63
All Seasons Tires Description 63
P-Metric Sized Tires Description 64
Driveline System Description and Operation 65
Driveline/Axle – Propeller Shaft 65
Front Propeller Shaft Description 65
One Piece Propeller Shaft Description 65
Two Piece Propeller Shaft Description 65
Propeller Shaft Phasing Description 65
Universal Joint Description 65
Center Bearing Description 65
Wheel Drive Shafts Description and Operation 66
Front Drive Axle Description and Operation 66
Selectable Four Wheel Drive (S4WD) Front Axle Description and Operation 66
Full-Time Four Wheel Drive (F4WD) Front Axle Description and Operation 66
Rear Drive Axle Description and Operation 67
Locking/Limited Slip Rear Axle Description and Operation 67
Limited-Slip Function 68
Locking Function 68
Locking Differential Torque-Limiting Disc 69
Transfer Case - NVG 149-NP3 (One Speed Automatic) 69
Transfer Case - NVG 261-NP2 (Two Speed Manual) 70
NVG 261 Variations 71
Transfer Case - NVG 263-NP1 (Two Speed Selectable) 71
Front Axle Actuator 71
Transfer Case Shift Control Module 72
Transfer Case Encoder Motor 72
Transfer Case Encoder 72
Vehicle Speed Sensor 72
SERVICE Indicator (4WD) Lamp 72
Transfer Case - NVG 246-NP8 (Two Speed Automatic) 72
Braking System Description and Operation 74
Hydraulic Brake System Description and Operation 74
System Component Description 74
Hydraulic Brake Master Cylinder Fluid Reservoir 74
Hydraulic Brake Master Cylinder 74
Hydraulic Brake Pressure Balance Control System 74
Hydraulic Brake Pipes and Flexible Brake Hoses 74
Hydraulic Brake Wheel Apply Components 74
System Operation 74
Brake Assist System Description and Operation 74
System Component Description 74
Brake Pedal 74
Brake Pedal Pushrod 74
Vacuum Brake Booster 74
Vacuum Source 75
Vacuum Source Delivery System 75
System Operation 75

Disc Brake System Description and Operation 75
System Component Description 75
Disc Brake Pads 75
Disc Brake Rotors 75
Disc Brake Pad Hardware 75
Disc Brake Caliper Hardware 75
System Operation 75
Drum Brake System Description and Operation 75
System Component Description 75
Drum Brake Shoes 75
Brake Drums 75
Drum Brake Hardware 76
Drum Brake Adjusting Hardware 76
System Operation 76
Park Brake System Description and Operation w/Rear Disc 76
General Description 76
Park Brake Pedal Assembly 76
Park Brake Release Handle Assembly 76
Park Brake Cables 76
Park Brake Cable Equalizer 76
Park Brake Apply Lever 76
Park Brake Actuator/Adjuster 76
Park Brake Shoe 76
System Operation 76
Park Brake System Description and Operation (w/Rear Drum) 77
System Component Description 77
Park Brake Pedal Assembly: 77
Park Brake Release Handle Assembly: 77
Park Brake Cables: 77
Park Brake Cable Equalizer: 77
Park Brake Apply Lever: 77
System Operation 77
ABS Description and Operation 77
Antilock Brake System 77
Engine Description and Operation 78
Engine Mechanical – 4.3L 78
General Specifications 78
General 78
Balance Shaft 78
Block 78
Camshaft 78
Connecting Rod 78
Crankshaft 78
Exhaust Manifold 79
Intake Manifold 79
Lubrication System 79
Piston Rings 79
Pistons and Pins 80
Valve System 80
Fastener Tightening Specifications 80
Engine Component Description 83
Balance Shaft 83
Camshaft 83
Crankshaft 83
Cylinder Heads 83
Engine Block 83

Exhaust Manifolds 84
Intake Manifold 84
Piston and Connecting Rod Assemblies 84
Valve Train 84
Crankcase Ventilation System Description 84
Drive Belt System Description 84
Lubrication Description 85
Engine Mechanical – 4.8, 5.3, 6.0L 87
General Specifications 4.8L (LR4 VIN V) 87
General 87
Block 87
Camshaft 87
Connecting Rod 87
Crankshaft 88
Cylinder Head 88
Intake Manifold 88
Lubrication System 89
Oil Pan 89
Piston Rings 89
Pistons and Pins 89
Valve System 90
General Specifications 5.3L (LM7 VIN T) 91
General 91
Block 91
Camshaft 91
Connecting Rod 91
Crankshaft 92
Cylinder Head 92
Intake Manifold 92
Lubrication System 93
Oil Pan 93
Piston Rings 93
Pistons and Pins 93
Valve System 94
General Specifications 5.3L (L59 VIN Z) 95
General 95
Block 95
Camshaft 95
Connecting Rod 95
Crankshaft 96
Cylinder Head 96
Intake Manifold 96
Lubrication System 97
Oil Pan 97
Piston Rings 97
Pistons and Pins 97
Valve System 98
General Specifications 5.3L (L33 VIN B) 99
General 99
Block 99
Camshaft 99
Connecting Rod 99
Crankshaft 100
Cylinder Head 100
Intake Manifold 100
Lubrication System 101

Oil Pan 101
Piston Rings 101
Pistons and Pins 101
Valve System 102
General Specifications 6.0L (LQ4 VIN U) 103
General 103
Block 103
Camshaft 103
Connecting Rod 103
Crankshaft 104
Cylinder Head 104
Intake Manifold 104
Lubrication System 105
Oil Pan 105
Piston Rings 105
Pistons and Pins 105
Valve System 106
General Specifications 6.0L (LQ9 VIN N) 107
General 107
Block 107
Camshaft 107
Connecting Rod 107
Crankshaft 108
Cylinder Head 108
Intake Manifold 108
Lubrication System 109
Oil Pan 109
Piston Rings 109
Pistons and Pins 109
Valve System 110
Fastener Tightening Specifications 111
Engine Component Description 114
The 4.8, 5.3, and 6.0 Liter V8 Engines 114
Camshaft and Drive System 114
Crankshaft 114
Cylinder Heads 115
Engine Block 115
Exhaust Manifolds 115
Intake Manifold 115
Oil Pan 115
Piston and Connecting Rod Assembly 115
Valve Rocker Arm Cover Assemblies 115
Valve Train 115
Lubrication Description 116
Drive Belt System Description 116
Crankcase Ventilation System Description 117
General Description 117
Operation 117
Results of Incorrect Operation 117
Engine Mechanical –6.6L Diesel (RPO LLY) 118
Engine Mechanical Specifications 118
General 118
Block 118
Camshaft 118
Cooling System 118
Connecting Rod 118

Crankshaft 119
Cylinder Head 119
Exhaust Manifold 119
Intake Manifold 119
Lubrication System 119
Oil Pump 119
Piston Rings 120
Pistons and Pins 120
Starter 120
Valve System 120
Fastener Tightening Specifications 121
Drive Belt System Description 124
Engine Component Description 124
Upper Oil Pan 124
Crankshaft 124
Connecting Rods 124
Pistons 124
Cylinder Heads 124
Valve Train 125
Fuel System 125
Fuel Injection Control Module 125
Turbocharger 125
Oil Cooler 125
Oil Pump 125
Water Pump 125
Engine Covers 125
Lubrication Description 126
Lubrication Flow Schematic 126
Crankcase Ventilation System Description 127
Engine Mechanical – 8.1L (RPO L18 VIN G) 128
General Specifications 128
General 128
Block 128
Camshaft 128
Connecting Rod 128
Crankshaft 128
Cylinder Head 129
Exhaust Manifold 129
Lubrication System 129
Piston Rings 129
Piston and Pins 129
Valve System 130
Fastener Tightening Specifications 131
Drive Belt System Description 133
Engine Component Description 133
Cylinder Head 133
Camshaft 134
Crankshaft 134
Pistons and Connecting Rods 134
Valve Train 134
Intake Manifold 134
Exhaust Manifold 134
Lubrication Description 135
Engine Cooling 137
Fastener Tightening Specifications 137
Cooling System Description and Operation 138

Engine Coolant Indicators 138
ENGINE COOLANT HOT 138
ENGINE OVERHEATED 138
LOW COOLANT LEVEL B 138
REDUCED ENGINE POWER 138
Cooling Fan Control - Two Fan System 139
Coolant Level Control (If Equipped) 139
Coolant Heater 139
Cooling System 140
Cooling Cycle 140
Cooling Cycle (6.6L Diesel Engine) 140
Coolant 140
Radiator 140
Surge Tank 141
Pressure Cap 141
Cooling Fan and Clutch 141
Air Baffles and Seals 141
Water Pump 142
Water Pump (6.6L Diesel Engine) 142
Thermostat 142
Thermostats (6.6L Diesel Engine) 142
Engine Oil Cooler 143
Engine Oil Cooler (6.6L Diesel Engine) 143
Transmission Oil Cooler 143
Turbocharger Bypass Valve (6.6L Diesel Engine) 143
Starter Generator Control Module Cooling System Description and Operation 143
SGCM Cooling System Components 143
SGCM 143
SGCM Coolant Pump 144
SGCM Coolant Fan 144
SGCM Cooling System Operation 144
SGCM Cooling System Coolant Cycle 144
Engine Electrical 145
Fastener Tightening Specifications 145
Battery Usage – Non HP2 147
Battery Usage (HP2) 147
Battery Temperature vs Minimum Voltage 147
Generator Usage 147
Battery Description and Operation 148
Reserve Capacity 149
Cold Cranking Amperage 149
Circuit Description 149
Starting System Description and Operation 149
Charging System Description and Operation (W/O Generator/Battery Control Module) 150
Generator 150
Regulator 150
Auxiliary Battery Charging 150
Energy Storage Box (ESB) Description and Operation 151
Energy Storage Box (ESB) 151
Hybrid Control Module (HCM) Description and Operation 152
Hybrid Control Module (HCM) 152
Starter/Generator Description and Operation 152
Starter/Generator Control Module (SGCM) Description and Operation 152
Engine Controls 153
Engine Controls – 4.3L 153
Ignition System Specifications 153

Fastener Tightening Specifications 153
Fuel System Specifications 154
Engine Controls – 4.8, 5.3 & 6.0L 155
Ignition System Specifications 155
Fastener Tightening Specifications 155
Engine Controls – 6.6L Diesel 156
Fastener Tightening Specifications 156
Fuel System Specifications 157
What Fuel to Use in the United States 157
What Fuel to Use in Canada 158
Very Cold Weather Operation 158
Fuel Specific Gravity Testing 158
Fuel Injector Return Flow and Fuel Pressures 158
Water in Fuel 158
Very Cold Weather Operation 159
Water in Fuel 159
Glow Plug System Description 159
Glow Plugs 159
Glow Plug Relay/Controller 160
Accelerator Pedal Position (APP) System Description 160
Accelerator Pedal Position (APP) Sensor 160
Exhaust Gas Recirculation (EGR) System Description 161
Air Intake System Description 161
Air Cleaner Restriction Indicator 161
Manual High Idle System Description 162
High Idle System 162
High Idle Speed Enable and Disable 162
Turbocharger Description and Operation 163
Turbocharger Vane Position Control Solenoid Valve 164
Turbocharger Vane Position Sensor 164
Engine Control Module (ECM) 164
Engine Controls – 8.1L 165
Ignition System Specifications 165
Fastener Tightening Specifications 165
Exhaust System 166
Fastener Tightening Specifications 166
Exhaust System Description 167
Resonator 167
Catalytic Converter 167
Muffler 167
Transmission/Transaxle Description and Operation 168
Manual Transmission - NV 3500 168
Fastener Tightening Specifications 168
Lubrication Specifications 168
Description and Operation 168
Manual Transmission - NV 4500 169
Fastener Tightening Specifications 169
Lubrication Specifications 169
Description and Operation 169
Clutch 170
Fastener Tightening Specifications 170
Clutch Types 170
4.3L Clutch 170
4.8L Clutch 170
6.0L Clutch 170
8.1L Clutch 170

6.6L Clutch 171
Principal Components 171
Clutch Driving Members 171
Clutch Driven Members 171
Clutch Operating Members 171
Hydraulic Clutch Description 172
Principal Components 172
Clutch Driving Members 172
Clutch Driven Members 172
Clutch Operating Members 172
Hydraulic Clutch Description 173
Automatic Transmission – 4L60-E/4L65-E/4L70-E 174
Transmission General Specifications 174
Fastener Tightening Specifications 174
Secondary Fluid Pump Assembly Specifications (M33 Only) 176
Pump 176
Relief Pressure 176
Operating Temperature 176
Motor 176
Operating Voltage 176
Fluid Capacity Specifications 176
Transmission Component and System Description 176
Adapt Function 177
Transmission Adapt Function 177
Automatic Transmission Shift Lock Control Description 177
Automatic Transmission – 4L80E 178
Transmission General Specifications 178
Fastener Tightening Specifications 178
Fluid Capacity Specifications Overhaul 179
Transmission General Description 179
Automatic Transmission - Allison 180
Transmission General Specifications 180
Fastener Tightening Specifications 180
Fluid Capacity Specifications 181
Description and Operation 181
Component and System Description 181
Engine/Transmission Connection 181
Torque Converter 181
Gear Sets 181
Clutches 181
Hydraulic System 182
Transmission Fluid Filtration 182
Electro-Hydraulic Control Valve Assembly 182
Remote Oil Cooler Provision 182
Fill Tube/Dipstick Provision 182
Park Pawl 182
PTO Provision 182
Output Yoke/Flange 182
Tow/Haul Mode 182
Activation 183
Abbreviations and Meanings i
Conversion - English/Metric i
Equivalents - Decimal and Metric ii
Fasteners i
Metric Fasteners i
Fastener Strength Identification i

Prevailing Torque Fasteners ii
All Metal Prevailing Torque Fasteners ii
Nylon Interface Prevailing Torque Fasteners ii
Adhesive Coated Fasteners ii
Metric Prevailing Torque Fastener Minimum Torque Development iii
All Metal Prevailing Torque Fasteners iii
Nylon Interface Prevailing Torque Fasteners iii
English Prevailing Torque Fastener Minimum Torque Development iv
All Metal Prevailing Torque Fasteners iv
Nylon Interface Prevailing Torque Fasteners iv

Product Information

2007 Chevy Silverado Classic Paves Way for All-New Models

Chevrolet Silverado Classic is GM's best-selling vehicle and known for offering one of the broadest model ranges in the industry, with a diverse array of body styles and powertrains that combine to create the vehicles that meet every full-size pickup customer's needs, whether professional or personal.

The lineup includes everything from the fuel-saving Silverado 1500 Hybrid Classic to the high-performance Silverado SS Classic, as well as 1500HD, 2500HD and 3500 models, to handle any heavy duty chores that customers throw at them. All 2007 Silverado Classic 1500, 1500HD and 2500HD models carry the distinctive front-end appearance that was introduced in '06. It features a bold grille design and power dome hood.

The Silverado Classic is offered for the '07 model year with the same capable, ready-for-anything lineup as 2006, as Chevrolet prepares to launch an all-new Silverado. Check the GM media Silverado website link – http://media.gm.com/us/chevrolet/en/product_services/r_trucks/r_c_silverado/index.html – after Aug. 1 for the latest information.

VortecMAX Performance Package

The VortecMAX performance package with enhanced Heavy Duty towing is designed to increase the towing capability of 4WD models of the Silverado Classic 1500 extended cab/standard-length box and Silverado Classic 1500 Crew Cab. The package includes a high-output Vortec 6.0L engine rated at 345 horsepower (257 kW) and 380 lb.-ft. of torque (515 Nm), 17-inch wheels, a heavy-duty trailering package, 9.5-inch rear axle, automatic locking differential, VortecMAX door badging and engine cover.

The high-output 6.0L engine and heavy duty 9.5-inch axle help give Silverado Classic improved towing capability. The package enables a 10,400-pound towing capacity on the extended cab 2WD extended cab model and up to 10,100 pounds with the 2WD Crew Cab.

Silverado SS Classic

The Silverado SS Classic is available in 2WD and AWD configurations. The 2WD model has an 8,100-pound (3,674 kg) towing capacity and broadens SS performance choices by offering customers traditional rear-wheel drive performance at a great value.

The Silverado SS Classic is based on the 1500 Series Extended Cab with a short bed. It is powered by a high-output version of GM's Vortec 6.0L V-8, which pumps out 345 horsepower (257 kW) and 380 lb.-ft. (515 Nm) of torque. The engine is connected to a Hydra-Matic 4L85 four-speed automatic overdrive transmission equipped with a 3.06 first gear and 0.70 final gear, which transfers power to a 4.10-geared locking rear axle for rapid acceleration and relaxed highway cruising.

Silverado Hybrid Classic

Silverado 1500 Hybrid Classic offers up to a 10-percent fuel economy improvement through its ability to automatically stop and restart the engine under different operating circumstances. Instead of a conventional starter motor and alternator, hybrid pickups use a compact, 14 kW electric induction motor or starter generator integrated in a patented, space-efficient manner between the engine and transmission. The starter generator provides fast, quiet starting power and allows automatic engine stops/starts to conserve fuel. It also smoothes out any driveline surges; generates electrical current to charge the batteries and run auxiliary power outlets; and provides coast-down regenerative braking, as an aid to fuel economy.

The standard Vortec 5.3L V-8 engine delivers 295 horsepower (220 kW) and 335 lb.-ft. (463 Nm) of torque – the same as its non-hybrid counterpart – along with the capability of acting as a mobile power-generating station, including four 120-volt/20-amp electrical auxiliary power outlets (APO). The power outlets are located under the rear seat of the cab and in the pickup bed. Customers can conveniently operate power equipment without taking up the bed space typical portable generators would use.

Silverado Classic lineup

Within the light duty lineup, Silverado Classic can be ordered in an almost unlimited number of configurations: Regular, Extended or Crew Cab body styles; standard 6.5-foot (2m) or extended 8-foot (2.4m) cargo boxes, along with the new 5-foot 8-inch short box on light-duty models; 1500 half-ton or 2500 three-quarter-ton models; and either 2WD or 4WD systems.

An impressive array of Vortec engines is offered: a 4.3L V-6; 4.8L V-8; three versions of the Vortec 5.3L V-8 – including an E85-capable FlexFuel version; and the powerful Vortec 6.0L V-8. Engine output ranges from 195 hp (145 kW) all the way up to 345 hp (257 kW).

Light duty Silverado Classic models with the Vortec 5.3L V-8 are offered with E85 capability. E85 is a renewable fuel made of 85 percent ethanol and 15 percent gasoline. GM vehicles with E85 capability can run on 100 percent gasoline or on E85 or any combination of the two.

Silverado Classic can be equipped to meet any personal requirement or professional demand when it comes to hauling or towing. Payload capacities range from 1,216 pounds (552 kg) all the way to 3,129 pounds (1,419 kg) for 1500HD models.

Silverado Classic safety

All Silverado 1500 Classic models (except 1500HD) are equipped with GM's Passenger Sensing System, which uses the latest sensing technology to turn the front passenger air bag on or off. If the sensor system detects an unoccupied front passenger seat or the presence of a smaller occupant, the front passenger air bag is designed to automatically turn off so it will not deploy in the event of a frontal collision. A status indicator on the instrument panel alerts occupants that the passenger air bag is on or off. Even with this system, GM strongly recommends restraining child passengers in an appropriate child seat placed in the second or third row of the vehicle. Never install a rear-facing infant seat in front of an active air bag. GM also recommends that all children 12 and under ride in the rear seat when possible.

The Silverado Classic also has dual-stage frontal air bags (not available on 1500HD Crew Cab and 2500HD and 3500 models) for supplemental protection for front seat passengers. Dual-stage frontal air bags are designed to help reduce the risk of air bag-induced injury. When the air bag system's control unit detects an impact, it determines whether the crash is severe enough to trigger a deployment, and whether the primary amount of inflation is sufficient. The primary stage alone will deploy in most frontal impacts requiring the supplemental protection of an air bag, while a secondary stage is designed to deploy in more severe frontal collisions.

GM's OnStar safety and security system is standard on LT and available on LS light duty models. In the heavy-duty range, OnStar is standard on Silverado LT Extended Cab and Crew Cab models, and available on 2500 HD and 3500 models. OnStar-equipped Silverados feature OnStar dual-mode (analog-digital) equipment. OnStar's digital equipment also includes enhanced hands-free voice recognition capabilities including more intuitive continuous digit dialing and improved voice recognition accuracy. OnStar is the leading provider of in-vehicle safety, security and information services in the United States and Canada . Using the GPS satellite network and wireless technology, OnStar features core safety services and OnStar Hands-Free Calling that allows drivers to make and receive voice-activated phone calls using an externally mounted antenna for greater reception.

Additional safety and security systems include electronic traction control on 2WD Silverado Classics to enhance handling and response on models equipped with a V-8 engine, automatic transmission and locking rear differential. All models come standard with PASSLock II theft deterrent system, and a driver information center that monitors and reports on up to 34 vehicle system functions.

Silverado Classic entertainment

Impressive entertainment systems – from available Bose sound systems to a Panasonic DVD passenger entertainment system – add to Silverado Classic's comforts. On Crew Cab models, available rear-seat audio controls allow second-row passengers to enjoy a separate audio source from front-seat occupants.

Z71 Off-Road Package

The Silverado Classic Z71 Off-Road Package is available on half-ton 4WD models with LT trim. The Z71 package includes 46-mm gas-charged shock absorbers, off-road jounce bumpers, specific stabilizer bars, a skid-plate package, a high-capacity air cleaner and distinctive Z71 decals for the pickup box.

Silverado Classic with the Z71 package can be equipped with features such as cruise control, rear defogger, power door locks, remote keyless entry, rearview mirror, AM/FM stereo with CD and cassette player, leather-wrapped steering wheel, power windows, fog lamps, color-keyed grille and deep-tinted glass.

Silverado Classic Heavy Duty

Chevy Silverado Classic Heavy Duty pickups make up the segment's most diverse lineup of workhorse pickups, with a wide selection of weight ratings, body styles and powertrain combinations including diesel and compressed natural gas (CNG) models. At the top of the gasoline engine range is the available Vortec 8.1L V-8, rated at 330 hp (246 kW) and 450 lb.-ft. (610 Nm) of torque. The available Duramax Diesel engine was during 2006 for improved performance, smoothness and quiet. Output is rated at 360 horsepower (268 kW) and 650 lb.-ft. of torque (881 Nm).

With impressive power, tough frames, advanced suspensions and high-capacity brakes, the Silverado Classic 2500HD/3500 Series provides outstanding payload capacities as well as outstanding hauling and towing capabilities. The 2500 HD models have a GVWR of as much as 9,200 pounds (4,173 kg), and payloads of up to 4,058 pounds (1,841 kg). The 3500 Series pickup models have a GVWR of up to 11,400 pounds (5,171 kg) and payloads of up to 5,511 pounds (2,500 kg), when equipped with dual rear wheels.

For chassis cab models, Silverado Classic HD has an 11,400-pound (5,171-kg) GVWR for 2WD versions and a 12,000-pound (5,443 kg) GVWR when equipped with 4WD. Chassis cabs provide payloads up to 6,226 pounds (2,824 kg).

Duramax 6.6L turbo-diesel

An all-new version of the Duramax 6.6L turbo-diesel V-8 engine was introduced during the '06 model year and paired with the Allison 1000 six-speed automatic transmission. In this configuration the engine delivers 360 hp (268 kW) at 3200 rpm and 650 lb.-ft. of torque (881 Nm) – more power with lower emissions than the previous diesel engine. Peak torque is achieved at 1,800 rpm.

The Duramax 6.6L's horsepower and torque increase and emissions reduction are enabled by a strengthened iron cylinder block and a lower compression ratio. The lower compression reduces stress on the engine by reducing the peak cylinder firing pressure. This, in turn, allows more fuel to be burned – more fuel means more power – while the lower compression helps reduce NOx emissions. Lower compression also helps reduce noise and vibration, making it a quieter and smoother engine.

A revised variable-geometry turbocharger also enhances the driving experience of the Duramax 6.6L. Aerodynamic changes to the turbo's impellers help tailor controlled application of turbo power for seamless and immediate response at full throttle. The turbo, which spins at up to 120,000 rpm, is high-speed-balanced, reducing vibration and resonance – and contributing to the engine's overall smoothness and refinement. The revised turbo also helps reduce emissions, while maximum boost remains at 20 psi.

The Duramax 6.6L also has an intake air heater to reduce smoke and emissions during cold or light-load driving. The system features a 600-watt grid heater located in the air intake duct, which is triggered automatically by the engine controller. It heats up the incoming air to speed warm-up of the engine.

New For 2007

- Final model year for current generation of GM's best-selling vehicle
- Recovery hooks standard on all 1500HD, 2500HD and 3500 models

Model Lineup – Silverado Classic 1500

	Engines				Transmissions			
	Vortec 4.3L V-6	Vortec 4.8L V-8	Vortec 5.3L V-8	Vortec 6.0L V-8	4-spd auto (Hydra-Matic 4L60)	4-spd auto (Hydra-Matic 4L70)	4-spd auto (Hydra-Matic 4L80)	5-spd man (MG5)
1500 Regular Cab, Standard Box	s	o*	o*	–	o	–	–	s
1500 Regular Cab, Long Box	s	o*	o*	–	o	–	–	s
1500 Extended Cab, Standard Box	s	o	o	–	s	o***	–	–
1500 Extended Cab, Long Box	–	s**	o	–	s	–	–	–
1500 Extended Cab, Short Box	–	–	s	–	s	–	–	–
1500 Crew Cab Short Box	–	s	o	o	s	o***	–	–
1500HD Crew Cab Short Box	–	–	–	s	–	–	s	–

* Available only with four-speed automatic overdrive transmission
** Vortec 5300 V-8 is included with LT trim
*** Requires 6.0L high-output

Key:
Standard s
Optional o
Not available --

Model Lineup – Silverado Classic 2500HD & 3500 Series

	Engines			Transmissions		
	Vortec 6.0L V-8	Vortec 8.1L V-8	Duramax 6.6L V-8	5-spd man (MW3)	4-spd auto (Hydra-Matic 4L80)	6-spd auto (MW7)
2500HD Regular Cab, Long box, 2WD/4WD	s	o	o	s	o	o
2500HD Extended Cab, Stand. Box, 2WD/4WD	s	o	o	s	o	o
2500HD Extended Cab, Long Box, 2WD/4WD	s	o	o	s	o	o
2500HD Crew Cab Short Box, 2WD/4WD	s	o	o	s	o	o
2500HD Crew Cab Long Box, 2WD/4WD	s	o	o	s	o	o
3500 Regular Cab Long Box, SRW, 2WD/4WD	s	o	o	-	s	o
3500 Regular Cab Long Box, DRW, 4WD	s	o	o	-	s	o
3500 Extended Cab Long Box, SRW, 2WD/4WD	s	o	o	-	s	o
3500 Extended Cab Long Box, DRW, 2WD/4WD	s	o	o	o	s	o
3500 Crew Cab Long Box, SRW, 2WD/4WD	s	o	o	-	s	o
3500 Crew Cab Long Box, DRW, 2WD/4WD	s	o	o	o	s	o

Key:

Standard	s
Optional	o
Not available	--

Specifications – Silverado 1500 Classic

Models:	2007 Chevrolet Silverado 1500 Classic Series, including Silverado SS Classic and 1500HD
	C/K 15703: Regular Cab Standard Box, 2WD and 4WD
	C/K 15903: Regular Cab Long box, 2WD and 4WD
	C/K 15753: Extended Cab Standard Box, 2WD and 4WD
	C/K 15953: Extended Cab Long Box, 2WD & 4WD
	C/K 15553: Extended Cab Short Box, 2WD & 4WD
	C/K 15543: Crew Cab Short Box, 2WD & 4WD AWD
	C/K 15743: Crew Cab Standard Box, 2WD & 4WD (1500HD)
Body style / driveline:	2/3-passenger Regular Cab, 5/6-passenger Extended Cab, 5/6-passenger Crew Cab, 1/2-ton, 2-, 4- and all-wheel drive light-duty pickups available with 5-foot 8-inch, 6-foot 6-inch, and 8-foot (1.7 m, 2 m and 2.4 m) box
Construction:	body on frame
EPA vehicle class:	full-size truck
Manufacturing location:	Oshawa, Ontario, Canada; Fort Wayne, Indiana; Pontiac, Michigan; Flint, MI (1500HD)
Key competitors:	Ford F-Series Pickup, Dodge Ram Pickup, Toyota Tundra Pickup, Nissan Titan Pickup

Engines

	Vortec 4300 4.3L V-6 (LU3)	**Vortec 4800 4.8L V-8 (LR4)**	**Vortec 5300 5.3L V-8 (LM7) *including Hybrid model***	**Vortec 5300 5.3L V-8 (L33)**
Type:	4.3L V-6	4.8L V-8	5.3L V-8	5.3L V-8
Displacement (cu in / cc):	262 / 4300	293 / 4807	325 / 5328	325 / 5328
Bore & stroke (in / mm):	4 x 3.48 / 101.6 x 88	3.78 x 3.27 / 96.01 x 83	3.78 x 3.62 / 96.01 x 92	3.78 x 3.62 / 96.01 x 92
Block material:	cast iron	cast iron	cast iron	aluminum with iron cylinder sleeves
Cylinder head material:	cast iron	cast aluminum	cast aluminum	cast aluminum
Valvetrain:	OHV, 2 valves per cylinder	OHV, 2 valves per cylinder	OHV, 2 valves per cylinder	OHV, 2 valves per cylinder
Ignition system:	direct composite distributor, platinum-tipped spark plugs, low-resistance spark plug wires	coil near plug, composite distributor, platinum-tipped spark plugs, low-resistance spark plug wires	coil near plug, composite distributor, platinum-tipped spark plugs, low-resistance spark plug wires	coil near plug, composite distributor, platinum-tipped spark plugs, low-resistance spark plug wires
Fuel delivery:	sequential fuel injection	sequential fuel injection	sequential fuel injection	sequential fuel injection
Compression ratio:	9.2:1	9.5:1	9.5:1	9.5:1
Horsepower (hp / kw @ rpm):	195 / 145 @ 4600	285 / 201 @ 5200	295 / 220 @ 5200	310 / 231 @ 5200
Torque (lb-ft / Nm @ rpm):	260 / 353 @ 2800	295 / 398 @ 4000	335 / 463 @ 4000	335 / 463 @ 4000
Recommended fuel:	87 octane	87 octane	87 octane	87 octane
Maximum engine speed (rpm):				
Manual:	5600	5600	5600	5600
Automatic:	5600	6000	6000	6000

	Vortec 4300 4.3L V-6 (LU3)	Vortec 4800 4.8L V-8 (LR4)	Vortec 5300 5.3L V-8 (LM7) *including Hybrid model*	Vortec 5300 5.3L V-8 (L33)
Emissions controls:	3-way catalytic converter, exhaust gas recirculation, positive crankcase ventilation, evaporative collection system			

Engines (Continued)

	Vortec 5300 5.3L V-8 (L59) Flexible Fuel	Vortec 6000 6.0L V-8 (LQ4)	Vortec 6000 6.0L V-8 (LQ9) (Silverado SS Classic & VortecMAX Performance Package)
Type:	5.3L V-8	6.0L V-8	6.0L V-8
Displacement (cu in / cc):	325 / 5328	364 / 5967	364 / 5967
Bore & stroke (in / mm):	3.78 x 3.62 / 96 x 92	4 x 3.62 / 101.6 x 92	4 x 3.62 / 101.6 x 92
Block material:	cast iron	cast iron	cast iron
Cylinder head material:	cast aluminum	cast aluminum	cast aluminum
Valvetrain:	OHV, 2 valves per cylinder	OHV, 2 valves per cylinder	OHV, 2 valves per cylinder
Ignition system:	coil near plug, composite distributor, platinum-tipped spark plugs, low-resistance spark plug wires	coil near plug, platinum-tipped spark plugs, low-resistance spark plug wires	coil near plug, platinum-tipped spark plugs, low-resistance spark plug wires
Fuel delivery:	sequential fuel injection	sequential fuel injection	sequential fuel injection
Compression ratio:	9.5:1	9.4:1	10:1
Horsepower (hp / kw @ rpm):	295 / 220 @ 5200	300 / 224 @ 4400	345 / 257 @ 5200
Torque (lb-ft / Nm @ rpm):	335 / 463 @ 4000	360 / 488 @ 4000	375 / 508 @ 4000
Recommended fuel:	87 octane or E85 (Ethanol)	87 octane	87 octane (premium recommended but not required)
Maximum engine speed (rpm):			
Manual:	5600	5600	5600
Automatic:	6000	5600	5600
Emissions controls:	3-way catalytic converter, exhaust gas recirculation, positive crankcase ventilation, evaporative collection system		

Estimated Fuel Economy

	C/K1500 Series (2WD)	C/K1500 Series (4WD)
Estimated fuel economy (mpg city / highway):	auto trans, 4.3L: 16 / 21	auto trans, 4.3L: 15 / 18
	auto trans, 4.8L: 16 / 20	auto trans, 4.8L: 15 / 19
	auto trans, 5.3L: 16 / 20	auto trans, 5.3L: 15 / 19
		auto trans, 6.0L: 12 / 16

Transmissions

	NV3500 (MG5)	Hydra-Matic 4L60-E (M30/M32)	Hydra-Matic 4L70-E (M70)	Hydra-Matic 4L80-E (MT1)
Type:	5-speed manual	4-speed automatic	4-speed automatic	4-speed automatic
First:	4.02	3.06	3.06	2.48
Second:	2.32	1.63	1.63	1.48
Third:	1.40	1.00	1.00	1.00
Fourth:	1.00	0.70	0.70	0.75
Fifth:	0.73	—	—	—
Reverse:	3.55	2.29	2.29	2.07
Final drive ratio:	3.08	3.08	4.10	3.42
	3.42	3.42	—	3.73
	3.73	3.73	—	4.10
	4.10	4.10	—	—

Chassis/Suspension

Front:	1500 4WD: independent with computer-selected torsion bars, 28.6-mm stabilizer bar
	1500 2WD: computer-selected coil springs; gas-pressurized shocks; 31.8-mm stabilizer bar
Rear:	solid axle with semi-elliptic, variable-rate, two-stage multileaf springs; gas-pressurized shocks
Traction control:	2WD only
Steering type	
1500 4WD:	power recirculating ball
1500 2WD:	power rack-and-pinion
Steering ratio:	14.2:1
Steering wheel turns, lock-to-lock:	3
Turning circle, curb-to-curb (ft / m):	
Ext. Cab Short Box with Quadrasteer:	37.4 / 11.4
2WD Reg. Cab Short Box:	40.1 / 12.2
2WD Ext. Cab Short Box:	46.6 / 14.2
4WD Ext. Cab Short Box:	47.3 / 14.4
2WD 1500 Crew Cab Short Box	46.6 / 14.2
4WD 1500 Crew Cab Short Box	47.3 / 14.4

Brakes

Type:	power-assisted, 4-wheel disc, 4-wheel ABS, DRP; or power-assisted, front disc/rear drum, 4-wheel ABS, DRP
Rotor diameter x thickness (in / mm)	
1500 with disc/drum brakes:	front: 12.99 x 1.18 / 330 x 30; rear: 11.61 x 2.36 / 295 x 60
1500 with 4-wheel disc:	front: 12.01 x 1.14 / 305 x 29; rear: 12.8 x 0.78 / 325 x 20
1500 HD	front: 12.8 x 1.5 / 325 x 38; rear: 13 x 1.14 / 330 x 29
Total swept area (sq in / sq cm)	
1500 with disc/drum brakes:	front: 301.2 / 1944; rear: 172.4 / 1112
1500 with 4-wheel disc:	front: 213.6 / 1378; rear: 211.1 / 1362
1500 HD	front: 245.5 / 1584; rear: 236.5 / 1526

Wheels/Tires

Wheel size & type:	
Work Truck	6-lug 17-inch x 7.0-inch painted steel (std)
2WD Reg and Ext cab, 2WD/4WD Crew Cab:	6-lug 17-inch x 7.5-inch chrome-style steel (std w/YE9, opt w/o YE9,
	6-lug 17-inch x 7-inch cast alum (opt on all)
	6-lug 20-inch x 8.5-inch chrome alum (std w/B4V)
	6-lug 20-inch x 8.5-inch chrome alum (opt w/Silverado SS Classic)
1500HD:	8-lug 16-inch x 6.5-inch chrome-style steel (std)
	8-lug 16-inch x 6.5-inch cast alum (opt)
Tires:	
2WD:	P245/70R17-108S all-season blackwall (std)
	P245/70R17-108S all-season white-outlined letter (opt)
	P275/55R20-111S touring blackwall (std w/B4V)
	P235/75R16-106S all-season blackwall (std w/PHT)
	P235/75R16-106S all-season white-outlined letter (opt w/PHT)
4WD (Reg/Ext. Cab):	P265/70R17-113S all-season blackwall (std)
	P265/70R17-113S all-season, white outlined-letter (opt)
	P265/70R17-113S on-off road blackwall (opt)
	P265/70R17-113S on-off road white outlined letter (opt)
	P245/55R20-111S touring blackwall (opt w/Silverado SS Classic)
	P245/75R20-109S all season blackwall (std w/PHT)
	P245/75R20-109S all season white outlined letter (opt w/PHT)
4WD Crew Cab:	P265/70R17-113S all-season blackwall (std)
	P265/70R17-113S all-season white-outlined letter (opt)
1500HD 2WD/4WD:	LT245/75R16E-120S all season blackwall (opt)
	LT245/75R16E-120S on-off road blackwall (opt)
	P245/75R16-109S all-season white outlined letter (opt)
	P265/75R16-109S all-terrain, blackwall (opt)
	P265/75R16-109S all-terrain, white outlined letter (opt)
	LT245/75R16C-108R on-off road blackwall (opt)
	LT245/75R16C-108R on-off road white outlined letter (opt)

Dimensions

Exterior

	Regular Cab, Standard Box	**Regular Cab, Long Box**	**Extended Cab, Standard Box**	**Extended Cab, Long Box**	**Extended Cab, Short Box**	**Crew Cab, Short Box**	**Crew Cab, Standard Box (1500HD)**
	C15703, K15703	**C 5903, K15903**	**C15753, K15753**	**C15953, K15953**	**C15553, K15553**	**C15543, K15543**	**C15743, K15743**
Wheelbase (in / mm):	119 / 3023	133 / 3378	143.5 / 3645	157.5 / 4000	134 / 3404	143.5 / 3645	153 / 3886
Overall length (in / mm):	202.9 / 5154	221.9 / 5636	227.4 / 5776	246.6 / 6264	217.9 / 5535	227.5 / 5779	237.2 / 6025
Overall width (in / mm):	78.5 / 1994	78.5 / 1994	78.5 / 1994	78.5 / 1994	78.5 / 1994	78.5 / 1994	79.7 / 2024
With YE9 package opt mirrors folded:	81.5 / 2070	81.5 / 2070	81.5 / 2070	81.5 / 2070	81.5 / 2070	-	81.5 / 2070
With YE9 package opt mirrors extend:	93.1 / 2363	93.1 / 2363	93.1 / 2363	93.1 / 2363	93.1 / 2363	-	93.1 / 2363

	Regular Cab, Standard Box	Regular Cab, Long Box	Extended Cab, Standard Box	Extended Cab, Long Box	Extended Cab, Short Box	Crew Cab, Short Box	Crew Cab, Standard Box (1500HD)
	C15703, K15703	C 5903, K15903	C15753, K15753	C15953, K15953	C15553, K15553	C15543, K15543	C15743, K15743
Overall height (in / mm)							
2WD:	71.2 / 1808	71 / 1803	71.2 / 1808	70.8 / 1798	71.2 / 1808	72.6 / 1844	77 / 1956
4WD:	73.8 / 1875	73.7 / 1872	73.9 / 1877	73.7 / 1872	73.9 / 1877	75 / 1905	77.3 / 1963
Track (in / mm)							
Front:	65 / 1651	65 / 1651	65 / 1651	65 / 1651	65 / 1651	65 / 1651	68.6 / 1899
Rear:	66 / 1676	66 / 1676	66 / 1676	66 / 1676	66 / 1676	66 / 1676	66 / 1676
Min. ground clearance (in / mm):							
2WD:	10.6 / 269	9.1 / 231	8 / 203	8 / 203	8 / 203	8.1 / 206	9.1 / 231
4WD:	8.4 / 213	8.4 / 213	8.7 / 221	8.4 / 213	8.7 / 221	8.7 / 220	10.6 / 269
Ground to top of load floor (in / mm):							
2WD:	31.6 / 803	31.6 / 803	31.6 / 803	31.6 / 803	31.6 / 803	31.6 / 803	-
4WD:	33.7 / 856	33.7 / 856	33.7 / 856	33.7 / 856	33.7 / 856	33.7 / 856	33.7 / 856
Step-in height:							
2WD:	19.5 / 495	19.5 / 495	19.5 / 495	19.5 / 495	19.5 / 495	19.5 / 495	19.5 / 495
4WD:	21.3 / 540	21.3 / 540	21.3 / 540	21.3 / 540	21.3 / 540	21.3 / 540	25.1 / 637.5
Approach angle (deg):	28	28	28	28	28	28	28
Breakover angle (deg):	14	14	14	14	14	14	14
Departure angle (deg):	23	23	23	23	23	23	23

Base Curb Weight & Payload

	GVWR (lb / kg)	Curb Weight (lb / kg)	Payload (lb / kg)	Weight Distribution (% front / rear)
2WD pickups:*				
C15703 Reg. Cab Stand. Box:	6100 / 2767	4211 / 1910	1889 / 857	57.7 / 42.3
C15903 Reg. Cab Long Box:	6400 / 2903	4348 / 1972	2052 / 931	57.9 / 42.1
C15753 Ext. Cab Stand. Box:	6200 / 2812	4627 / 2099	1573 / 714	57.9 / 42.1 (w/ LM7)
C15953 Ext. Cab Long Box:	6400 / 2903	4899 / 2222	1501 / 681	59 / 41 (w/ LM7)
C15553 Ext. Cab Short box:	6200 / 2812	4760 / 2159	1440 / 653	57.8 / 42.2
C15543 Crew Cab Short Box:	6900 / 3130	4987 / 2262	1913 / 868	57.6 / 42.4
C15743 1500HD Crew Cab Short Box:	8600 / 3901	5471 / 2482	3129 / 1419	57.6 / 42.4
4WD pickups:*				
K15703 Reg. Cab Stand. Box:	6400 / 2903	4508 / 2045	1892 / 858	58.6 / 41.4
K15903 Reg. Cab Long Box:	6400 / 2903	4634 / 2102	1766 / 801	58.8 / 41.2
K15753 Ext. Cab Stand. Box:	6400 / 2903	5018 / 2276	1382 / 627	59.9 / 40.1 (w/ LM7)
K15953 Ext. Cab Long Box:	6400 / 2903	5184 / 2351	1216 / 552	59.8 / 40.2 (w/ LM7)
K15553 Ext. Cab Short Box:	6400 / 2903	5050 / 2291	1350 / 612	58.4 / 41.6
K15543 Crew Cab Short Box:	7000 / 3175	5284 / 2397	1716 / 778	58.7 / 41.3
K15743 1500HD Crew Cab Short Box:	8600 / 3901	5762 / 2614	2838 / 1287	59.2 / 40.8

Cargo box

	Std. Box	Long Box	Short Box
Cargo volume (cu ft / L):	56.9 / 1611	73.9 / 2092.8	49.6 / 1405
Length at floor (in / mm):	78.7 / 1999	97.6 / 2479	69.2 / 1758
Width at floor (in / mm):	64.8 / 1646	64.8 / 1646	60.2 / 1529
Width at top (in / mm):	61.9 / 1572	61.9 / 1572	61.9 / 1572
Width between wheelhousings (in / mm):	50 / 1270	50 / 1270	50 / 1270
Tailgate width (in / mm):	63.8 / 1621	63.8 / 1621	60.6 / 1539
Inside height (in / mm):	19.5 / 495	19.5 / 495	19.5 / 495

Interior

	Regular Cab	Extended Cab, Front	Extended Cab, Rear	1500 Crew Cab, Front	1500 Crew Cab, Rear	2500 Crew Cab, Front	2500 Crew Cab, Rear
Headroom (in/mm):	41 / 1041	41 / 1041	38.4 / 975	40.7 / 1034	40.2 / 1021	41.1 / 1044	39.9 / 1013
Legroom (in/mm):	41.3 / 1049	41.3 / 1049	33.7 / 856	41.3 / 1049	39.1 / 993	41.3 / 1049	38.8 / 990
Shoulder room (in/mm):	61.4 / 1560	61.4 / 1560	65.1 / 1654	61.4 / 1560	65.1 / 1654	61.4 / 1560	65.1 / 1654
Hip room (in/mm):	63.9 / 1623	63.9 / 1623	61.4 / 1560	63.9 / 1623	61.4 / 1560	63.9 / 1623	61.4 / 1560

Capacities

	Regular Cab, Standard Box	Regular Cab, Long Box	Extended Cab, Standard Box	Extended Cab, Long Box	Extended Cab, Short Box	Crew Cab, Short Box	Crew Cab, Standard Box (1500HD)
	C15703, T15703	C15903, K15903	C15753, K15753	C15953, K15953	C15553, K15553	C15543, K15543	C15743, K15743
Seating:	2 / 3	2 / 3	5 / 6	5 / 6	5 / 6	5 / 6	5 / 6
Fuel tank (gal / L):	26 / 98.4	34 / 128.7	26 / 98.4	34 / 128.7	26 / 98.4	26 / 98.4	26 / 98.4
	Vortec 4.3L	Vortec 4.8L	Vortec 5.3L	Vortec 6.0L			
Engine oil (qt / L):	4.5 / 4.3	6 / 5.7	6 / 5.7	6 / 5.7			
Cooling system (qt / L):	manual: 12.9 / 12.2 automatic: 12.6 / 11.9	automatic: 13.4 / 12.7	manual: 13.4 / 12.7 automatic: 14.9 / 14.1	manual: 15.2 / 14.4 automatic: 14.4 / 13.6			

Trailer towing maximum with ball hitch (lb / kg):	
Reg. Cab, Std. Box	2WD: 8400 / 3810; with 5.3L V-8, auto. trans., 3.73 axle (req. WDH**) 4WD: 9100 / 4128; with 5.3L V-8, auto. trans., 4.10 axle (req. WDH**)
Reg. Cab, Long Box	2WD: 8200 / 3719; with 5.3L V-8, auto. trans., 3.73 axle (req. WDH**) 4WD: 8900 / 4037; with 5.3L V-8, auto. trans., 4.10 axle (req. WDH**)
Ext. Cab, Std. Box	2WD: 7900 / 3583; with 6.0L V-8, auto. trans., 3.73 axle (req. WDH**) 4WD: 8700 / 3946; with 5.3L V-8, auto. trans., 4.10 axle (req. WDH**)
Ext. Cab, Std. Box (w/ VortecMAX)	2WD: 10400 / 4717; with 6.0L V-8, auto. trans., 4.10 axle (req. WDH**) 4WD: 10000 / 4536; with 6.0L V-8, auto. trans., 4.10 axle (req. WDH**)
Ext. Cab., Long Box	2WD: 7800 / 3538; with 5.3L V-8, auto. trans., 3.73 axle (req. WDH**) 4WD: 8500 / 3856; with 5.3L V-8, auto. trans., 4.10 axle (req. WDH**)
Ext. Cab, Short Box	2WD: 8000 / 3629; with 5.3L V-8, auto. trans., 3.73 axle (req. WDH**) 4WD: 8700 / 3946; with 5.3L V-8, auto. trans., 4.10 axle (req. WDH**)
Crew Cab, Short Box	2WD: 7700 / 3493; with 6.0L V-8, auto. trans., 3.73 axle (req. WDH**) 4WD: 8400 / 3810; with 6.0L V-8, auto. trans., 4.10 axle (req. WDH**)
Crew Cab, Short Box (w/ VortecMAX)	2WD: 10100 / 4581; with 6.0L V-8, auto. trans., 3.73 axle (req. WDH**) 4WD: 9900 / 4491; with 6.0L V-8, auto. trans., 4.10 axle (req. WDH**)
Crew Cab, Std. Box (1500HD)	2WD: 10300 / 4672; with 6.0L V-8, auto. trans., 4.10 axle (req. WDH**) 4WD: 9900 / 4491; with 6.0L V-8, auto. trans., 4.10 axle (req. WDH**)

* 2WD/4WD 1500 Series models limited to 5,000-pound (2,250 kg) trailer ratings unless equipped with Z85 Increased Capacity or ZX3 Manual Select Damping or Z71 Off-Road Suspension Package. Z82 Heavy Duty Trailering Package includes trailer hitch platform, trailer electrical connector and suspension upgrade, if necessary.

** WDH = Weight distributing hitch

Note: Information shown is current at time of publication.

Specifications – Silverado 2500 & 3500 HD Classic

Overview

Models:	C/K 25903: 2500HD Reg. Cab, Long Box, 2WD & 4WD
	C/K 25753: 2500HD Ext. Cab, Std. Box, 2WD & 4WD
	C/K 25953: 2500HD Ext. Cab, Long Box, 2WD & 4WD
	C/K 25943: 2500HD Crew Cab, Long Box, 2WD & 4WD
	K 35903: 3500 Reg. Cab, Long Box, 4WD – single or dual rear wheel
	C/K 35953: 3500 Ext. Cab, Long Box, 2WD & 4WD – single or dual rear wheel
	C/K 35943: 3500 Crew Cab, Long Box, 2WD & 4WD – single or dual rear wheel
Body style / driveline:	2/3 passenger Regular Cab or 5/6 passenger Extended Cab,
	5-6-passenger Crew Cab
	3/4- and 1-ton, 2- and 4-wheel-drive heavy-duty pickup
Construction:	body on frame
EPA vehicle class:	full-size truck
Manufacturing location:	Fort Wayne, Indiana; Pontiac, Michigan; Flint, Michigan
Key competitors:	Ford Superduty Series Pickup, Dodge Ram Heavy Duty Pickup

Engines

	Vortec 6000 6.0L V-8 (LQ4)	**Vortec 8100 8.1L V-8 (L18)**	**Duramax 6600 6.6L V-8 (LBZ)**
Type:	6.0L V-8	8.1L V-8	6.6L V-8
Displacement (cu in / cc):	364 / 5967	496 / 8128	403 / 6599
Bore & stroke (in / mm):	4 x 3.62 / 101.6 x 92	4.25 x 4.37 / 107.9 x 111	4.06 x 3.9 / 103 x 99
Block material:	cast iron	cast iron	cast iron
Cylinder head material:	cast aluminum	cast iron	cast aluminum
Valvetrain:	OHV	OHV	OHV
Ignition system:	coil-near-plug, platinum- tipped spark plugs, low-resistance spark plug wires	coil-near-plug, platinum-tipped spark plugs, low-resistance spark plug wires	compression, glow plug start aid; low-resistance spark plug wires
Fuel delivery:	sequential fuel injection	sequential fuel injection	direct injection diesel with high pressure common rail
Compression ratio:	9.4:1	9.1:1	16.8:1
Horsepower (hp / kw @ rpm):	300 / 224 @ 4400	330 / 246 @ 4200 (L18)	360 / 268 @ 3200 (auto trans)
Torque (lb-ft / Nm @ rpm):	360 / 488 @ 4000	450/ 610 @ 3200 (L18)	650 / 881 @ 1600 (auto trans)
Recommended fuel:	87 octane	87 octane	diesel
Maximum engine speed (rpm):	manual: 5600	manual: 5000	3250
	auto: 5600	auto: 4000	
Emissions controls:	3-way catalytic converter, exhaust gas recirculation, positive crankcase ventilation, evaporative collection system	3-way catalytic converter, exhaust gas recirculation, positive crankcase ventilation, evaporative collection system	turbocharged, intercooled, catalytic converter system

Transmissions

	Hydra-Matic 4L80-E	NVG 3500 (MW3)	Allison 1000 (MW7)
Type:	4-speed automatic	5-speed manual	6-speed automatic
Gear ratios (:1):			
First:	2.48	5.61	3.10
Second:	1.48	3.04	1.81
Third:	1.00	1.67	1.41
Fourth:	0.75	1.00	1.00
Fifth:	—	0.75	0.71
Sixth:	—	—	0.61
Reverse:	2.08	5.04	4.49
Final drive ratio (with all transmissions):	Vortec 6000: 4.10 standard on all models		
	Vortec 8100: (opt) 3.73 or 4.10 on 2500HD; 4.10 std on 3500 Series		
	Duramax 6600: 3.73 ratio standard on all models		

Chassis/Suspension

Front :	(all models) std long- and short-arm independent front torsion bar suspension		
Rear 2500HD Pickups:	semi-elliptic 2-stage multileaf spring 3-stage multileaf spring		
Steering type:	integral power recirculating ball		
Steering ratio:	24:1		
Steering wheel turns, lock-to-lock	3.14		
	Regular Cab	**Extended Cab**	**Crew Cab**
Turning circle, curb-to-curb (ft / m):			
2500HD Series single-wheel pickups:	2WD: 43.8 / 13.4	2WD: 46.8 / 14.3	2WD: 49.6 / 15.1
	4WD: 43.8 / 13.4	4WD: 50.8 / 15.5	4WD: 49.6 / 15.1
3500 Series dual-wheel pickups:	2WD: 43.7 / 13.3	2WD: 50.7 / 15.5	2WD: 53.5 / 16.3
	4WD: 43.7 / 13.3	4WD: 50.7 / 15.5	4WD: 53.5 / 16.3
3500 Series single-wheel pickups:	4WD: 43.8 / 13.4	4WD: 50.8 / 15.5	4WD: 49.6 / 15.1

Brakes

Type:	power, Hydroboost brake-apply system, 4-wheel disc, 4-wheel ABS
Rotor diameter x thickness (in / mm):	front: 12.8 x 1.5 / 325 x 38 rear: 12.8 x 1.2 / 325 x 30
Total swept area (sq in / sq cm):	front: 245.5 / 1584 rear: 235.1 / 1517

Wheels/Tires

Wheel size and type:	8-bolt 16 x 6.5-inch steel wheels std; opt on 2500HD models: chrome center cap, chrome steel wheels with chrome center cap and polished forged aluminum wheels
Tires:	2500HD models: LT245/75R16E radials, with either all-season or on-/off-road design, depending on model
	3500-Series: LT215/85R16-E highway or on-/off-road tires; tire size and inflation pressure geared to specific load ratings

Dimensions

Exterior

	2500HD / 3500 Regular Cab Long Box	2500HD Extended Cab Standard Box	2500HD / 3500 Extended Cab Long Box	2500HD Crew Cab Standard Box	2500HD / 3500 Crew Cab Long Box
Wheelbase (in / mm):	133 / 3378	143.5 / 3645	157.5 / 4001	153 / 3886	167 / 4242
Overall length (in / mm):					
2WD:	222.1 / 5641	227.7 / 5784	246.6 / 6264	237.3 / 6027	256.2 / 6507
4WD:	222.1 / 5641		246.6 / 6264	237.3 / 6027	256.2 / 6507
Overall width (in / mm):					
2WD:	79.7 / 2024	79.7 / 2024	79.7 / 2024	79.7 / 2024	79.7 / 2024
4WD:	96.1 / 2441		96.1 / 2441	79.7 / 2024	79.7 / 2024
Overall height: (in / mm):					
2WD:	2500HD: 76.2 / 1935 3500: 76.7 / 1948	76.2 / 1935	2500HD: 76.2 / 1935 3500: 76.3 / 1938	77.0 / 1956	2500HD: 77 / 1956 3500: 76.3 / 1938
4WD:	2500HD: 76.5 / 1943 3500: 76.7 / 1948	76.5 / 1943	2500HD: 76.5 / 1943 3500: 76.7 / 1948	77.4 / 1966	2500HD: 77 / 1956 3500: 76.7 / 1948
Track (in / mm):					
Front:	68.6 / 1742	68.6 / 1742	68.6 / 1742	68.6 / 174.2	68.6 / 1742
Rear:	2500HD: 66 / 1676 3500: 74.7 / 1897	66 / 1676	2500HD: 66 / 1676 3500: 74.7 / 1897	66.0 / 1676	2500HD: 66 / 1676 3500: 74.7 / 1897
Minimum ground clearance (in / mm):					
2WD (front):	2500HD: 8.6 / 218.4 3500: 8.8 / 223.5	8.5 / 216	2500HD: 8.5 / 216 3500: 8.7 / 221	8.7 / 221.0	2500HD: 8.7 / 221 3500: 8.7 / 221
(rear):	2500HD: 7.5 / 190.5 3500: 7.6 / 193	7.4 / 188	2500HD: 7.4 / 188 3500: 7.5 / 190.4	7.4 / 188.0	2500HD: 7.6 / 193 3500: 7.6 / 193
4WD (front):	2500HD: 8.9 / 226.1 3500: 8.8 / 223.5	8.8 / 223.5	2500HD: 8.8 / 223.5 3500: 8.8 / 223.5	8.9 / 226.1	2500HD: 8.7 / 221 3500: 8.8 / 223.5
(rear):	2500HD: 7.5 / 190.5 3500: 7.6 / 193	7.4 / 188	2500HD: 7.4 / 188 3500: 7.6 / 193	7.4 / 188	2500HD: 7.6 / 193 3500: 7.6 / 193

	2500HD / 3500 Regular Cab Long Box	2500HD Extended Cab Standard Box	2500HD / 3500 Extended Cab Long Box	2500HD Crew Cab Standard Box	2500HD / 3500 Crew Cab Long Box
Step-in height (in / mm):					
2WD:	2500HD: 24.9 / 632.5 3500: 25.4 / 645.2	24.4 / 619.8	2500HD: 24.4 / 619.8 3500: 24.9 / 632.5	24.6 / 624.8	2500HD: 24.6 / 624.8 3500: 24.9 / 632.5
4WD:	2500HD: 25.4 / 645.2 3500: 24.9 / 632.5	24.6 / 624.8	2500HD: 24.6 / 624.8 3500: 24.9 / 632.5	25.1 / 631.5	2500HD: 25.1 / 637.5 3500: 24.9 / 632.5

	GVWR (lb / kg)	Curb Weight (lb / kg)	Payload (lb / kg)	Weight Distribution (% front/rear)
2500HD Reg Cab, Long Box 2WD/4WD:	2WD: 9200 / 4173 4WD: 9200 / 4173	5142 / 2332 5398 / 2448	4058 / 1841 3802 / 1724	56.2 / 43.8 57.8 / 42.2
2500HD Ext Cab, Std. Box 2WD/4WD:	2WD: 9200 / 4173 4WD: 9200 / 4173	5398 / 2448 5659 / 2567	3802 / 1724 3541 / 1606	56.1 / 43.9 58.6 / 41.4
2500HD Ext Cab, Long Box 2WD/4WD:	2WD: 9200 / 4173 4WD: 9200 / 4173	5561 / 2522 5848 / 2653	3639 / 1651 3352 / 1520	56.3 / 43.7 57.9 / 41.1
2500HD Crew Cab, Std. Box 2WD/4WD:	2WD: 9200 / 4173 4WD: 9200 / 4173	5594 / 2537 5883 / 2668	3606 / 1536 3317 / 1505	55.2 / 44.8 57 / 43
2500HD Crew Cab, Long Box 2WD/4WD:	2WD: 9200 / 4173 4WD: 9200 / 4173	5745 / 2606 6037 / 2738	3455 / 1568 3163 / 1435	55.5 / 44.5 57.2 / 42.8
3500 Reg Cab, Long Box, 2WD; SRW:	9600 / 4355	4942 / 2242	4658 / 2113	55.5 / 44.5
3500 Reg Cab, Long Box, 4WD; SRW / DRW:	SRW: 9900 / 4491 DRW: 11400 / 5171	5687 / 2580 5889 / 2671	4213 / 1911 5511 / 2500	55.2 / 44.8 53.6 / 46.4
3500 Ext Cab, Long Box, 2WD; SRW / DRW:	SRW: 9800 / 4445 DRW: 11400 / 5171	5712 / 2591 6053 / 2746	4088 / 1854 5347 / 2425	N/A 52.3 / 47.7
3500 Ext Cab, Long Box, 4WD; SRW / DRW:	SRW: 9900 / 4491 DRW: 11400 / 5171	6197 / 2811 6351 / 2881	3703 / 1680 5049 / 2290	55.2 / 44.8 53.9 / 46.1
3500 Crew Cab, Long Box, 2WD; SRW / DRW:	SRW: 9900 / 4491 DRW: 11400 / 5171	5911 / 2681 6231 / 2826	3989 / 1809 5169 / 2345	N/A 51.9 / 48.1
3500 Crew Cab, Long Box, 4WD; SRW / DRW:	SRW: 9900 / 4491 DRW: 11400 / 5171	6322 / 2868 6552 / 2988	3578 / 1623 4848 / 2199	55.4/ 44.6 53.6 / 46.4

Cargo box

	Long Box	Standard Box
Cargo volume (cu ft / L):	70.7 / 2002	56.9 / 1611
Length at floor (in / mm):	97.6 / 2479	78.7 / 1999
Width at floor (in / mm):	64.8 / 1646	64.8 / 1646
Opening width rear at top (in / mm):	61.9 / 1572	61.9 / 1572
Width between wheel housings (in / mm):	50 / 1270	50 / 1270
Inside height (in / mm)	19.5 / 495	19.5 / 495

Interior

	Regular Cab	Extended Cab	Crew Cab
Headroom (in / mm):	41 / 1041	front: 41 / 1041	front: 41 / 1041
		rear: 38.4 / 975	rear: 39 / 991
Legroom (in / mm):	41.3 / 1049	front: 41.3 / 1049	front: 41.3 / 1049
		rear: 33.7 / 856	rear: 39.1 / 993
Shoulder room (in / mm):	65.2 / 1656	front: 65.2 / 1656	front: 65.2 / 1656
		rear: 66.3 / 1684	rear: 65.1 / 1654
Hip room (in / mm):	61.4 / 1560	front: 61.4 / 1560	front: 61.4 / 1560
		rear: 61.5 / 1562	rear: 62.9 / 1598

Capacities

Fuel tank (gal / L):	standard box, all models (except diesel): 26 / 98.4; long box, all models (including diesels): 34 / 128.7; DRW chassis cab: 50 / 189.3
Trailer towing maximum with ball hitch (lb / kg): (All values require weight distributing hitch.)	
2500HD Reg. Cab, Long Box:	2WD: 12000 / 5443; 8.1L V-8 (w/4.10 axle) or 6.6L Diesel (w/3.73 axle) 4WD: 12000 / 5443; 8.1L V-8 (w/4.10 axle) or 6.6L Diesel (w/3.73 axle)
2500HD Ext. Cab, Std. Box:	2WD: 12000 / 5443; 8.1L V-8 (w/4.10 axle) or 6.6L Diesel (w/3.73 axle) 4WD: 12000 / 5443; 8.1L V-8 (w/4.10 axle) or 6.6L Diesel (w/3.73 axle)
2500HD Ext. Cab, Long Box:	2WD: 12000 / 5443; 8.1L V-8 (w/4.10 axle) or 6.6L Diesel (w/3.73 axle) 4WD: 12000 / 5443; 8.1L V-8 (w/4.10 axle) or 6.6L Diesel (w/3.73 axle)
2500HD Crew Cab, Std. Box:	2WD: 12000 / 5443; 8.1L V-8 (w/4.10 axle) or 6.6L Diesel (w/3.73 axle) 4WD: 12000 / 5443; 8.1L V-8 (w/4.10 axle) or 6.6L Diesel (w/3.73 axle)
2500HD Crew Cab, Long Box:	2WD: 12000 / 5443; 8.1L V-8 (w/4.10 axle) or 6.6L Diesel (w/3.73 axle) 4WD: 12000 / 5443; 8.1L V-8 (w/4.10 axle) or 6.6L Diesel (w/3.73 axle)
3500 Reg. Cab, Long Box, 4WD; SRW / DRW:	SRW: 12000 / 5443; 8.1L V-8 (w/4.10 axle) or 6.6L Diesel (w/3.73 axle) DRW: 12000 / 5443; 8.1L V-8 (w/4.10 axle) or 6.6L Diesel (w/3.73 axle)
3500 Ext. Cab, Long Box, 2WD; DRW	DRW: 12000 / 5443; 8.1L V-8 (w/4.10 axle) or 6.6L Diesel (w/3.73 axle)
3500 Ext. Cab, Long Box, 4WD; SRW / DRW:	SRW: 12000 / 5443; 8.1L V-8 (w/4.10 axle) or 6.6L Diesel (w/3.73 axle) DRW: 12000 / 5443; 8.1L V-8 (w/4.10 axle) or 6.6L Diesel (w/3.73 axle)
3500 Crew Cab, Long Box, 2WD; DRW:	DRW: 12000 / 5443; 8.1L V-8 (w/4.10 axle) or 6.6L Diesel (w/3.73 axle)
3500 Crew Cab, Long Box, 4WD; SRW / DRW:	SRW: 12000 / 5443; 8.1L V-8 (w/4.10 axle) or 6.6L Diesel (w/3.73 axle) 4WD: 12000 / 5443; 8.1L V-8 (w/4.10 axle) or 6.6L Diesel (w/3.73 axle)

	Regular Cab	Extended Cab	Crew Cab
Seating:	2 / 3	5 / 6	5 / 6
Engine oil (qt / L):	6.0 / 5.7	6.0 / 5.7	9.3 / 9.8
Cooling system (qt / L):			
Man trans:	15.2 / 14.4	23.6 / 22.3	21.8 / 20.7
Auto trans:	14.4 / 13.6	23.1 / 21.9	21.4 / 20.3

* For alternative-fuel vehicles, trailer tongue weight should be 10 to 15 percent of total-loaded trailer weight. On other models, trailer tongue weight should be 10 to 15 percent of total-loaded trailer weight up to 1,500 lb. (675 kg). On all models, the base cooling system includes all content required to attain maximum trailering rating, and the Z82 Heavy Duty trailering package includes the trailer hitch platform and trailer electrical connector.

Note: Information shown is current at time of publication.

Vehicle Identification

Vehicle Identification Number (VIN)

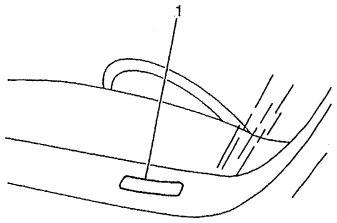

The vehicle identification number (VIN) plate is the legal identifier of the vehicle. The VIN plate is located on the upper LH corner of the Instrument Panel and can be seen through the windshield from the outside of the vehicle:

Position	Definition	Character	Description
1	Country of Origin	1 2	United States Canada
2	Manufacturer	G	General Motors
3	Make	B C D T	Chevrolet Incomplete Chevrolet Truck GMC Incomplete GMC Truck
4	GVWR/Brake System	E F G H J	6001-7000/Hydraulic 7001-8000/Hydraulic 8001-9000/Hydraulic 9001-10000/Hydraulic 10001-14000/Hydraulic
5	Truck Line/Chassis Type	C K	4x2 4x4
6	Series	1 2 6	Half Ton Nominal ¾ Ton Nominal 1/2 Ton Luxury
7	Body Type	3 4 9	Four-Door Crew Cab or Utility Two-Door Cab Extended Cab
8	Engine Type	X V Z T B U N G 2	4.3L V6 MFI (LU3) 4.8L V8 MFI (LR4) 5.3L V8 MFI (L59) 5.3L V8 MFI (LM7) 5.3L V8 SFI Alum. HO (L33) 6.0L V8 MFI (LQ4) 6.0L V8 MFI (LQ9) 8.1L V8 MFI (L18) 6.6L V8 DSL (LLY)
9	Check Digit	--	Check Digit
10	Model Year	7	2007
11	Plant Location	1 E F Z G	Oshawa, Ontario Pontiac, Michigan Flint, Michigan Fort Wayne, Indiana Silao, Mexico
12-17	Plant Seq. Number	--	Plant Sequence Number

VIN Derivative

All engines and transmissions are stamped or laser etched with a partial vehicle identification number (VIN), which was derived from the complete VIN. A VIN derivative contains the following nine positions:

Position	Definition	Character	Description
1	Division	B C D T	Chevrolet Incomplete Chevrolet Truck Gmc Incomplete Gmc Truck
2	Model Year	7	2007
3	Plant Location	1 E F Z G	Oshawa, Ontario Pontiac, Michigan Flint, Michigan Fort Wayne, Indiana Silao, Mexico
4-9	Plant Sequence Number	--	--

A VIN derivative can be used to determine if a vehicle contains the original engine or transmission, by matching the VIN derivative positions to their accompanying positions in the complete VIN:

VIN Derivative Position	Equivalent VIN Position
1	3
2	10
3	11
4-9	12-17

Engine ID and VIN Derivative Location

4.3L V-6 Engine

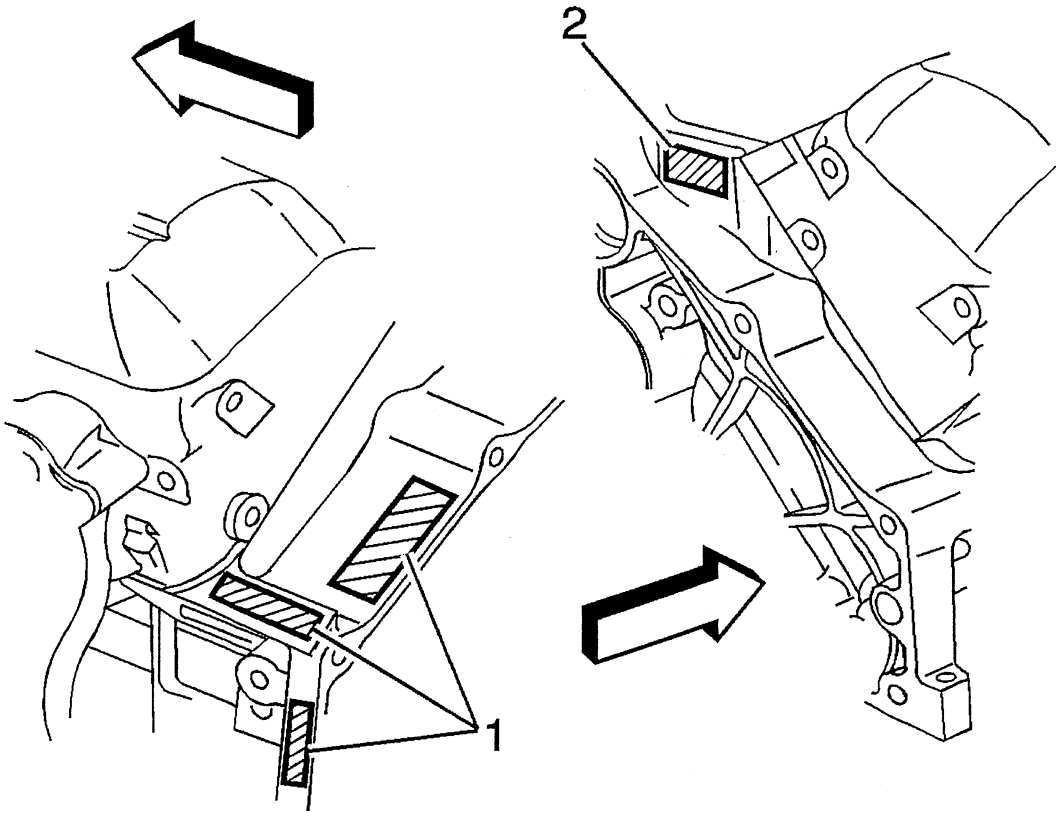

The Vehicle Identification Number (VIN) Derivative is located on the left side rear of the engine block (1) or on the right side rear (2) and typically is a 9 digit number stamped or laser etched onto the engine at the vehicle assembly plant.

- The first digit identifies the division.
- The second digit identifies the model year.
- The third digit identifies the assembly plant.
- The fourth through ninth digits are the last six digits of the VIN.

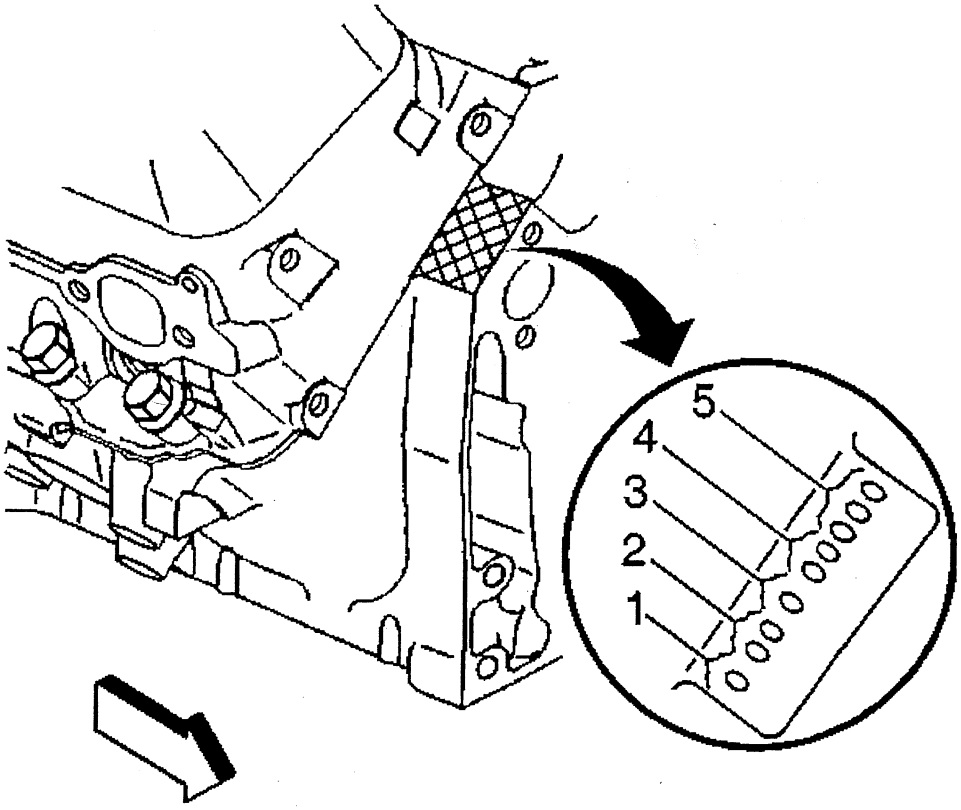

Engines built at the Romulus engine plant have the engine identification number located at the right front top of the engine block.

- The first digit (1) is the source code.
- The second and third digits (2) are the month of build.
- The fourth digit (3) is the hour of the build.
- The fifth and sixth digits (4) are the date of build.
- The seventh, eighth, and ninth digits (5) are the broadcast code.

4.8L, 5.3L, 6.0L V-8 Engines

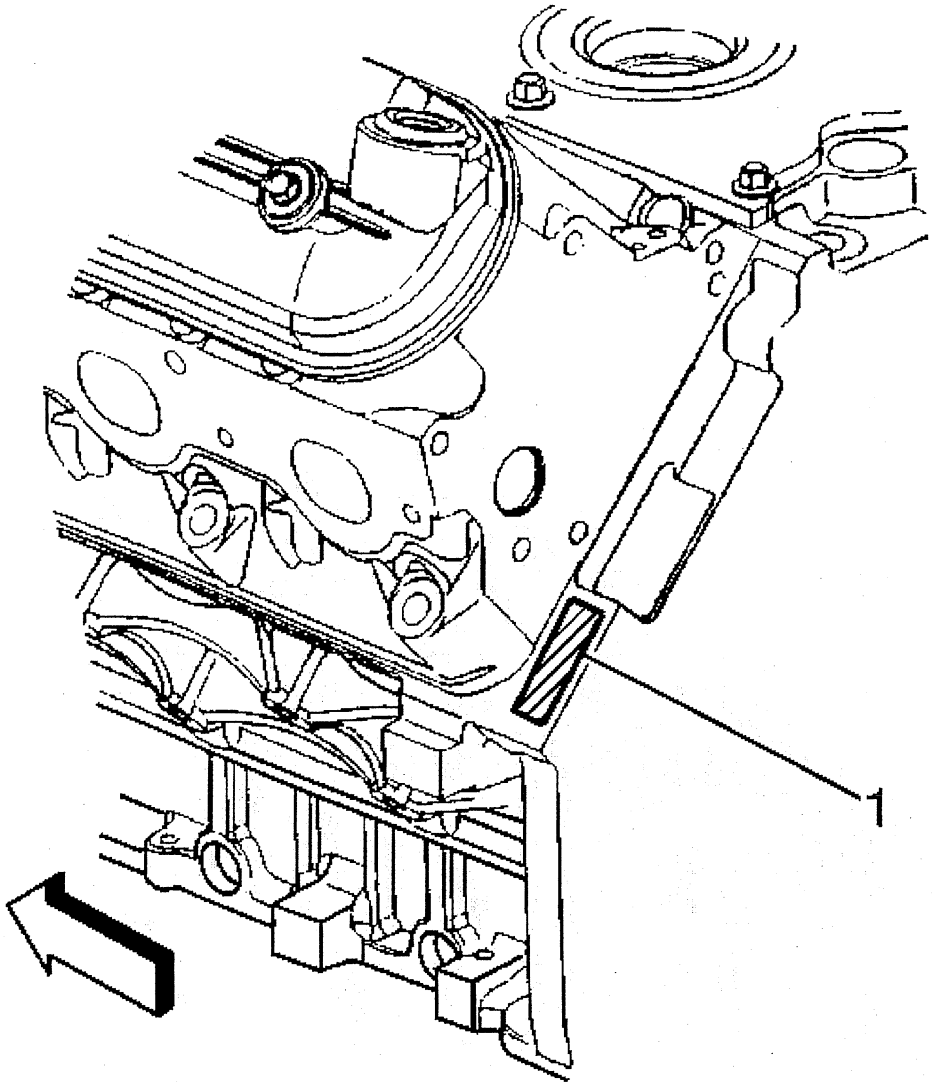

The vehicle identification number (VIN) is located on the left side rear of the engine block (1) and is typically a nine digit number stamped or laser-etched onto the engine at the vehicle assembly plant.

- The first digit identifies the division.
- The second digit identifies the model year.
- The third digit identifies the assembly plant.
- The fourth through ninth digits are the last six digits of the VIN.

8.1L V-8 Engine

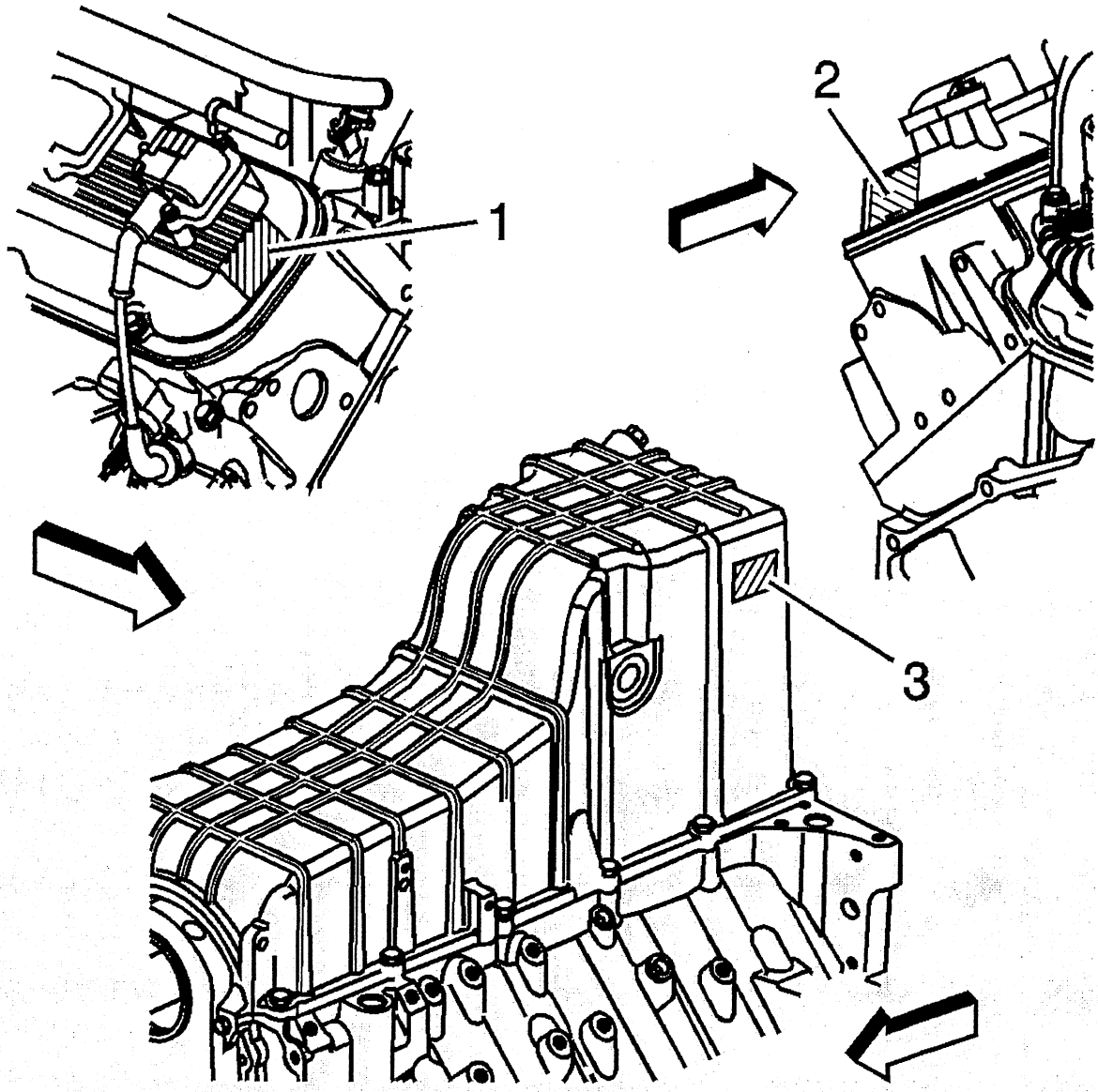

The engine identification number is located in three locations. There are labels on the front of the right rocker arm cover (1), the rear of the left rocker arm cover (2), and the right side of the engine oil pan (3). The engine identification number is used to track and identify the engine prior to installation in a vehicle.

The Vehicle Identification Number (VIN) Derivative is located on the left rear side of the engine block and is a nine digit number stamped or laser etched onto the engine at the vehicle assembly plant. If reading the identification number from the left, the following information can be obtained:

- The first digit identifies the division.
- The second digit identifies the model year.
- The third digit identifies the assembly plant.
- The fourth through ninth digits are the last six digits of the Vehicle Identification Number (VIN).

6.6L Diesel Engine

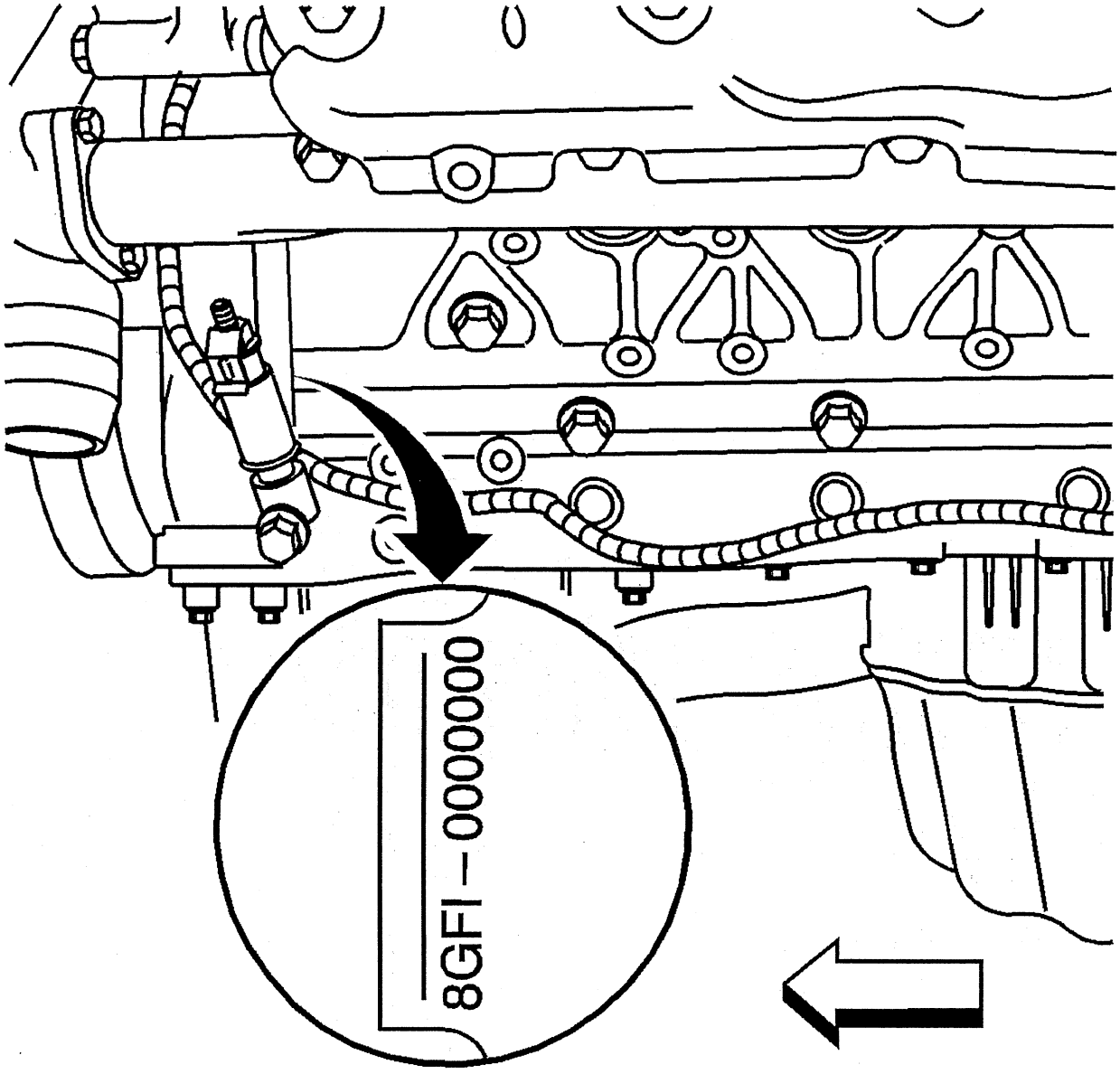

The engine identification tag is located on the left side of the block. It is on the front edge of the block.

Engine ID Legend

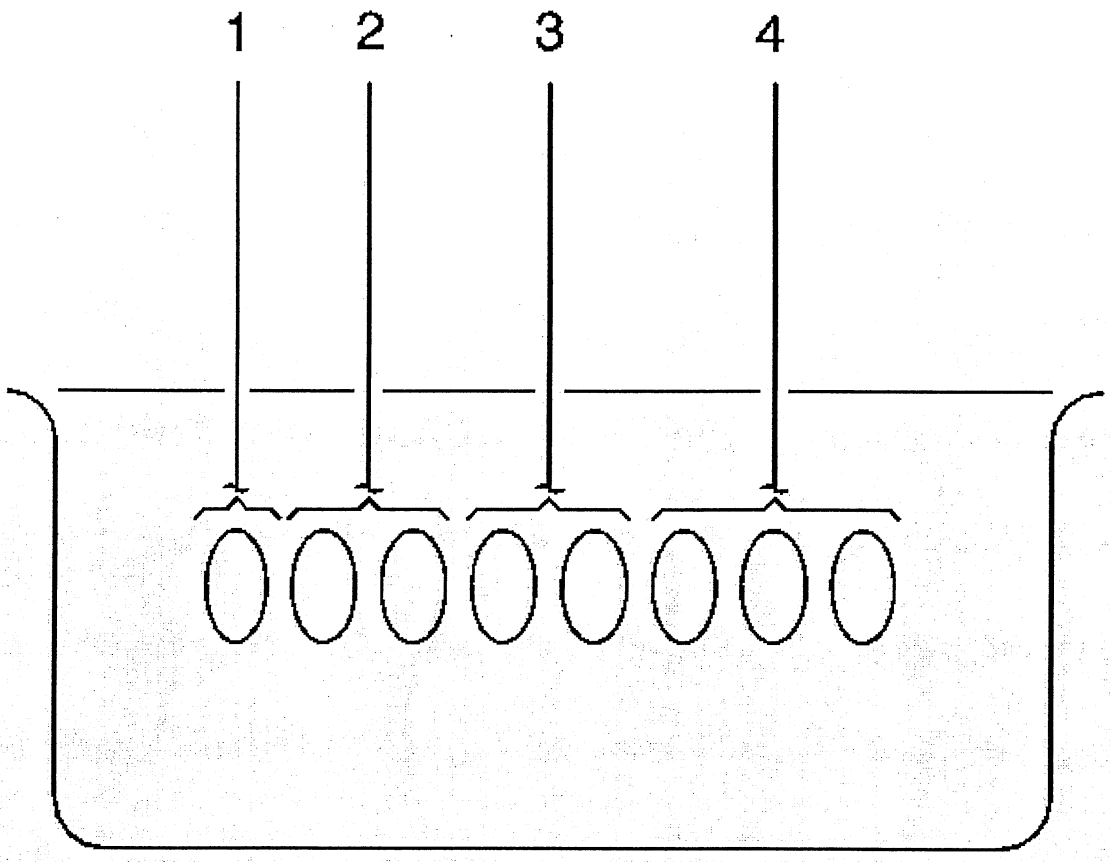

1. Source Code
2. Month of Build
3. Date of Build
4. Broadcast Code

Transmission ID and VIN Derivative Location

4L60-E Transmission ID Location

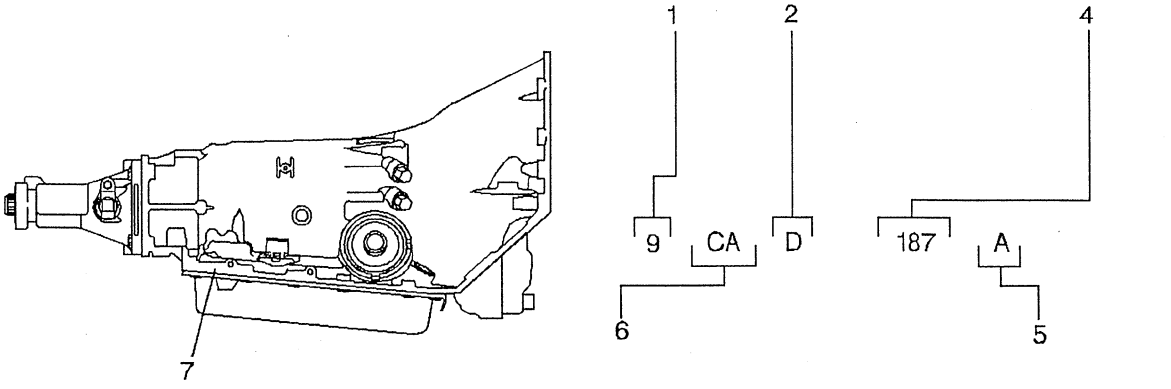

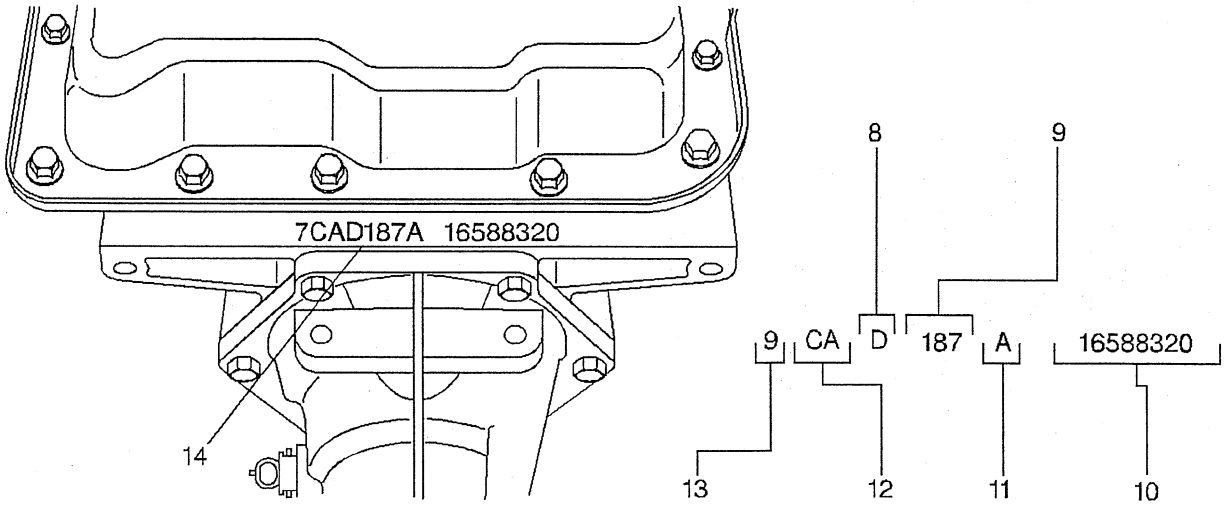

(1) Model Year
(2) Hydra-Matic 4L60-E
(4) Julian Date (or Day of the Year)
(5) Shift Built (A, B, J = First Shift; C, H, W = Second Shift)
(6) Model
(7) Transmission ID Location
(8) Hydra-Matic 4L60-E
(9) Julian Date (or Day of the Year)
(10) Serial No.
(11) Shift Built (A, B, J = First Shift; C, H, W = Second Shift)
(12) Model
(13) Model Year
(14) Transmission ID Location

Bar Code Label Contents(c)

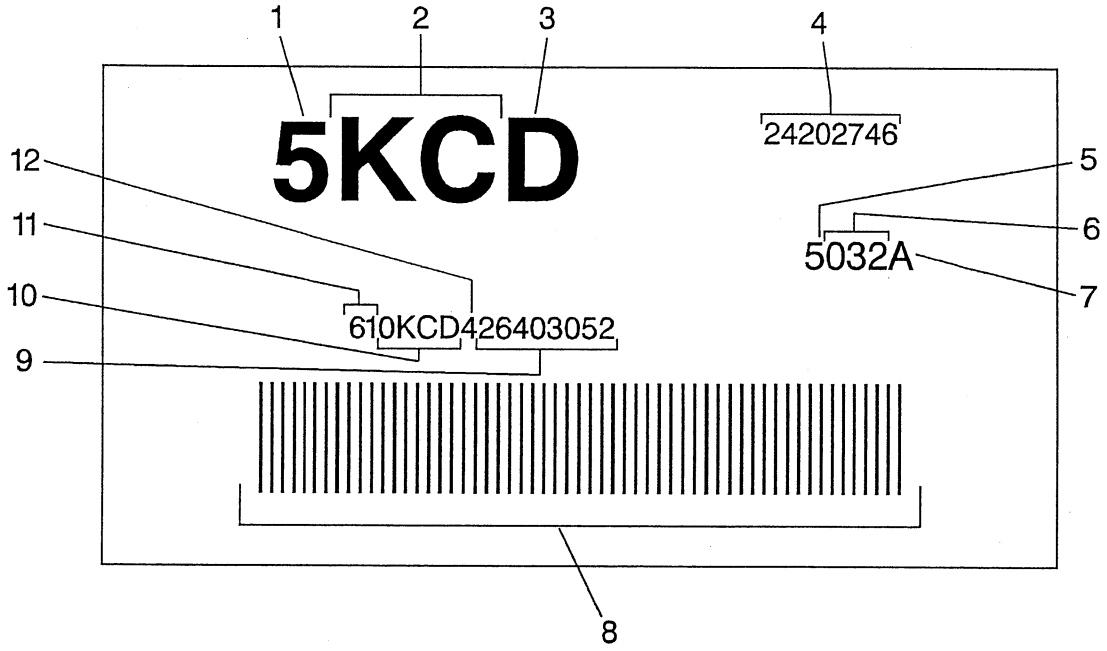

(1) 5 = 2005
(2) Model
(3) Hydra-Matic 4L60-E
(4) Transmission Asm. as Shipped Number
(5) 5 = Model Year
(6) Julian Date or Day of the Year
(7) Letter After Julian Date Identifies the Plant Shift Build, See Shift Build
(8) Bar Code
(9) Serial Number
(10) Broadcast Code
(11) Transmission ID
(12) Build Location Y = Toledo, OH, R = Romulus, MI, 4 = Ramos Arizpe, Mexico

4L80-E Transmission ID Location

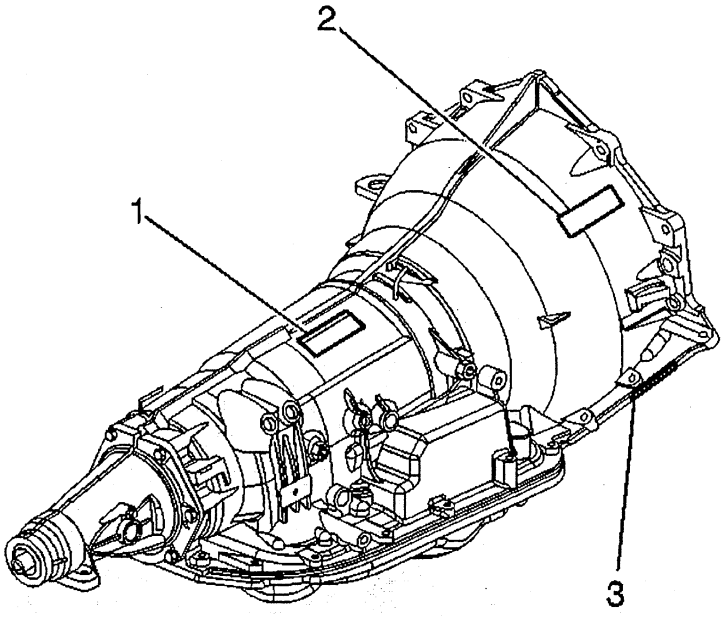

Transmission ID and VIN derivative locations (1, 2). The right hand stamping is shown, left hand is opposite. Pin or hand stamp location (3) for the transmission ID or VIN derivative.

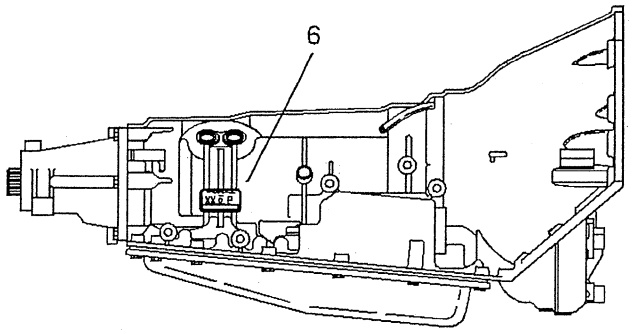

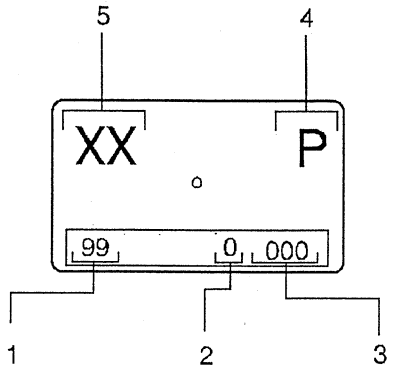

1. Calendar Year
2. Julian Date of the Year
3. Shift and Line Number
4. Plant
5. Model
6. Location on Transmission

5-Speed Getrag

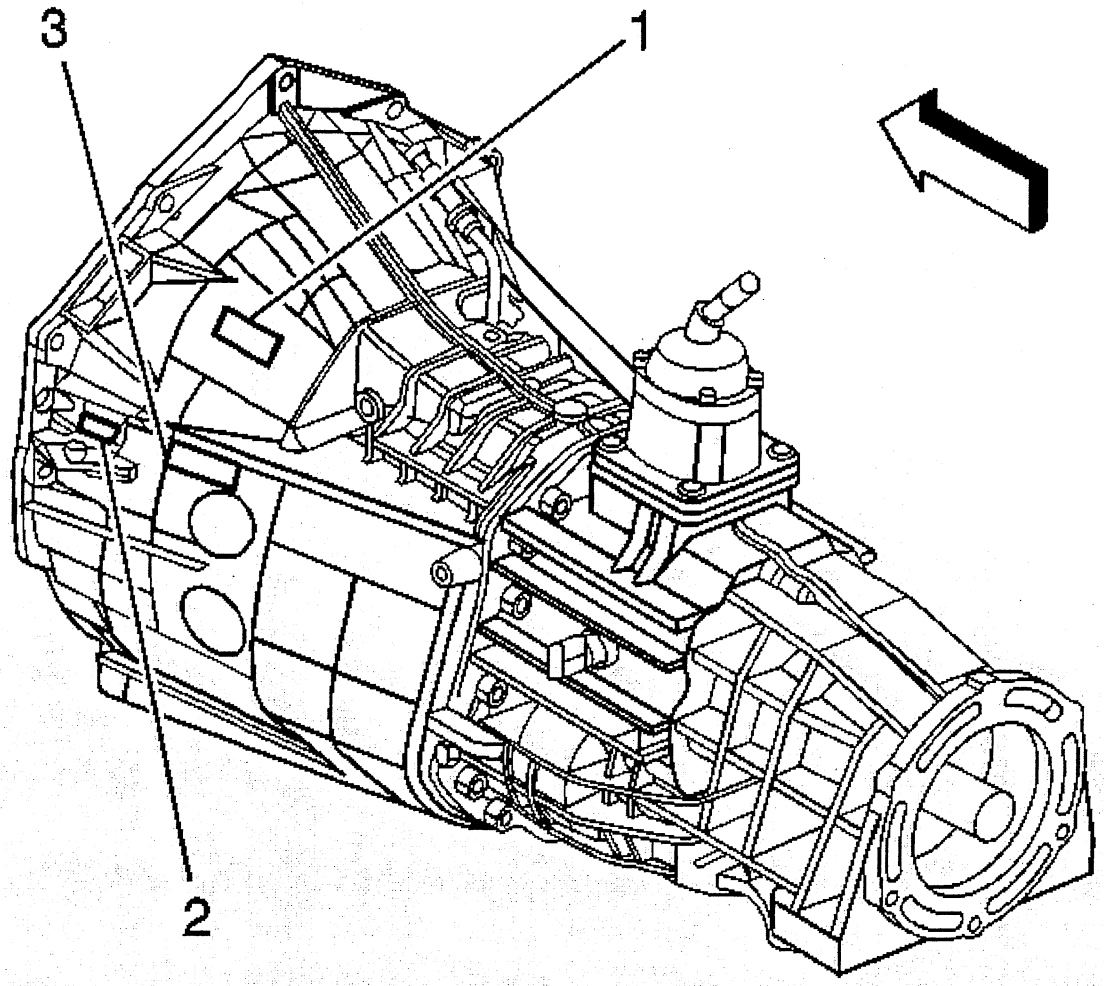

Vehicle identification number location PIN stamp only (1). Vehicle identification number location optional PIN or Hand Stamp (2). Vehicle identification number location optional Pin stamp only (3).

5-Speed Manual

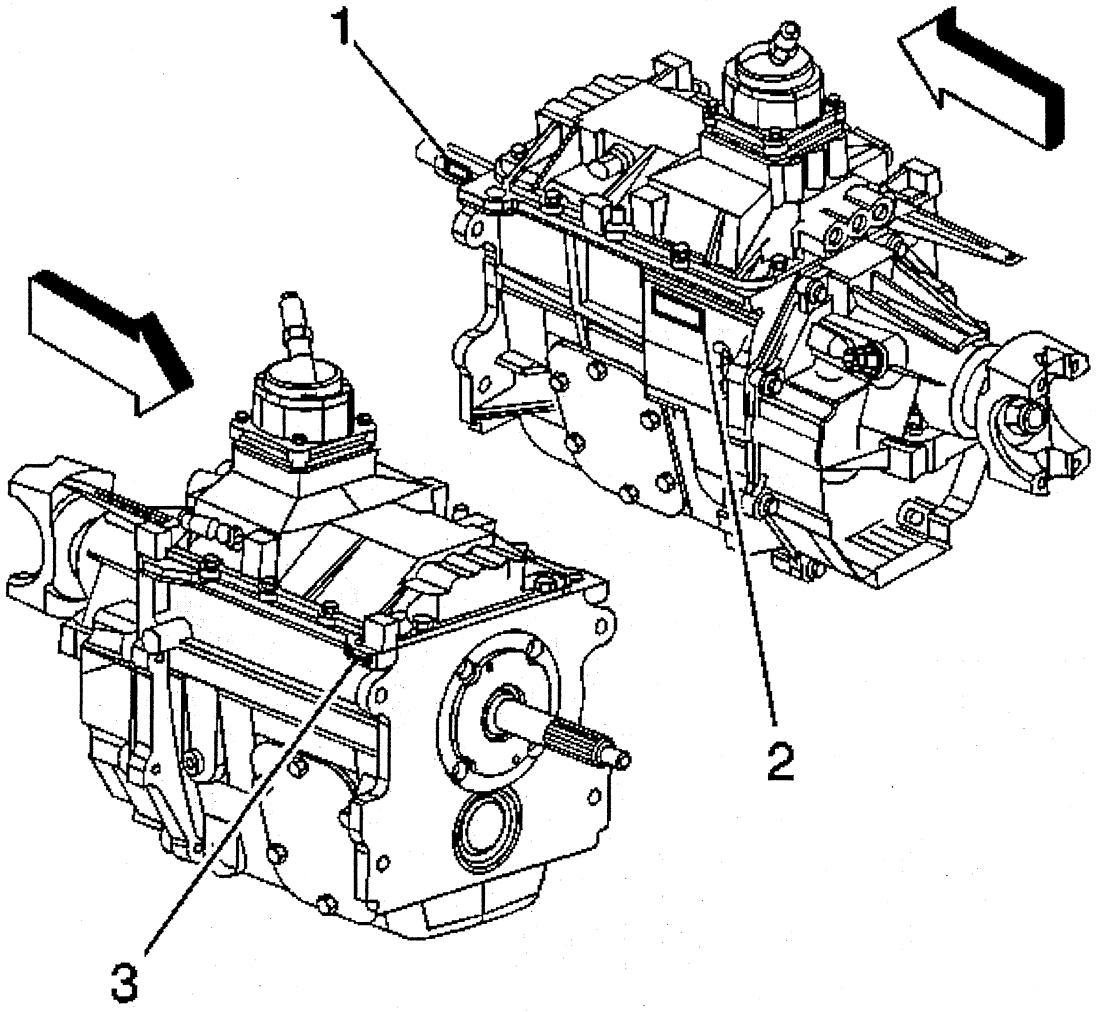

The transmission vehicle identification number location PIN or hand stamp (1, 3). Vehicle identification number location PIN or hand stamp (2).

Allison Transmission

Nameplate Location

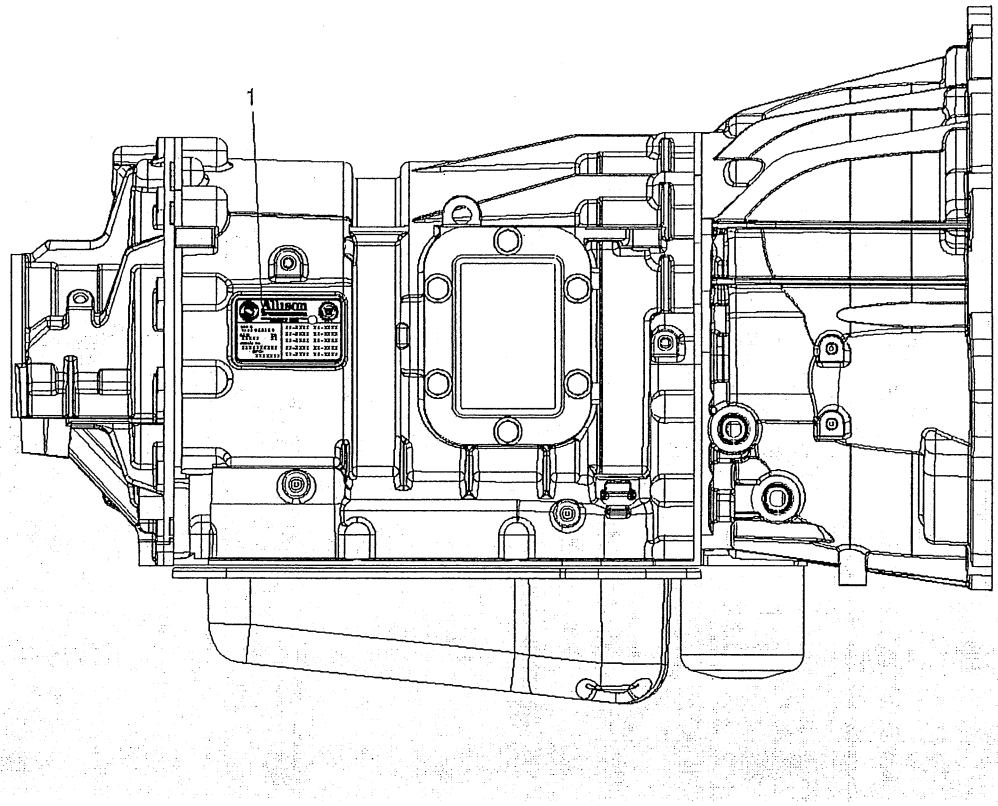

1. Nameplate

Nameplate Components with Ten Group Spaces(c)

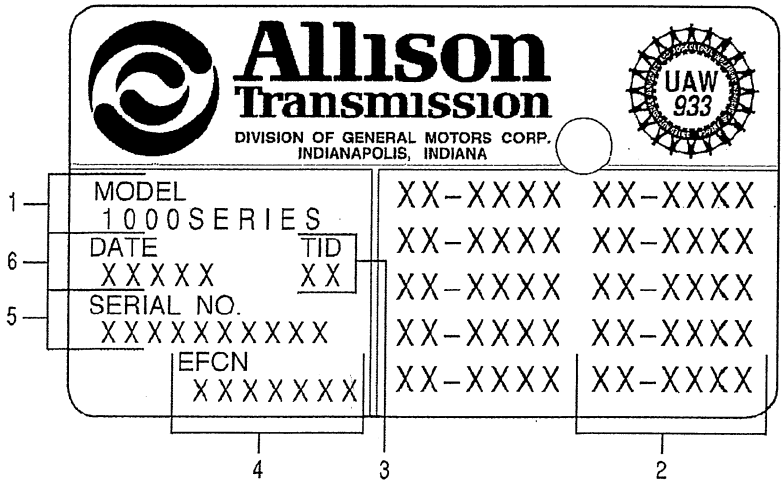

(1) Model (Series)
(2) Engineering Group Number
(3) Transmission Identification Number
(4) Engineering Feature Configuration Number
(5) Serial Number
(6) Date of Manufacture

Nameplate Components with Twelve Group Spaces(c)

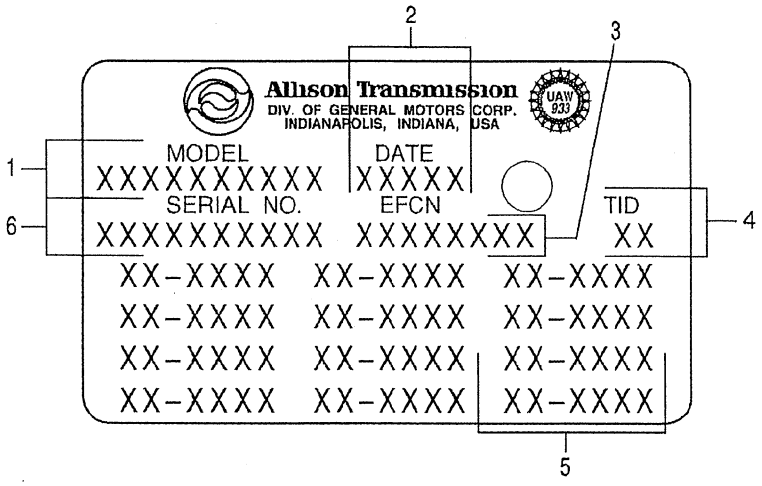

(1) Model (Series)
(2) Date of Manufacture
(3) Engineering Feature Configuration Number
(4) Transmission Identification Number
(5) Engineering Group Number
(6) Serial Number

ZF Transmission

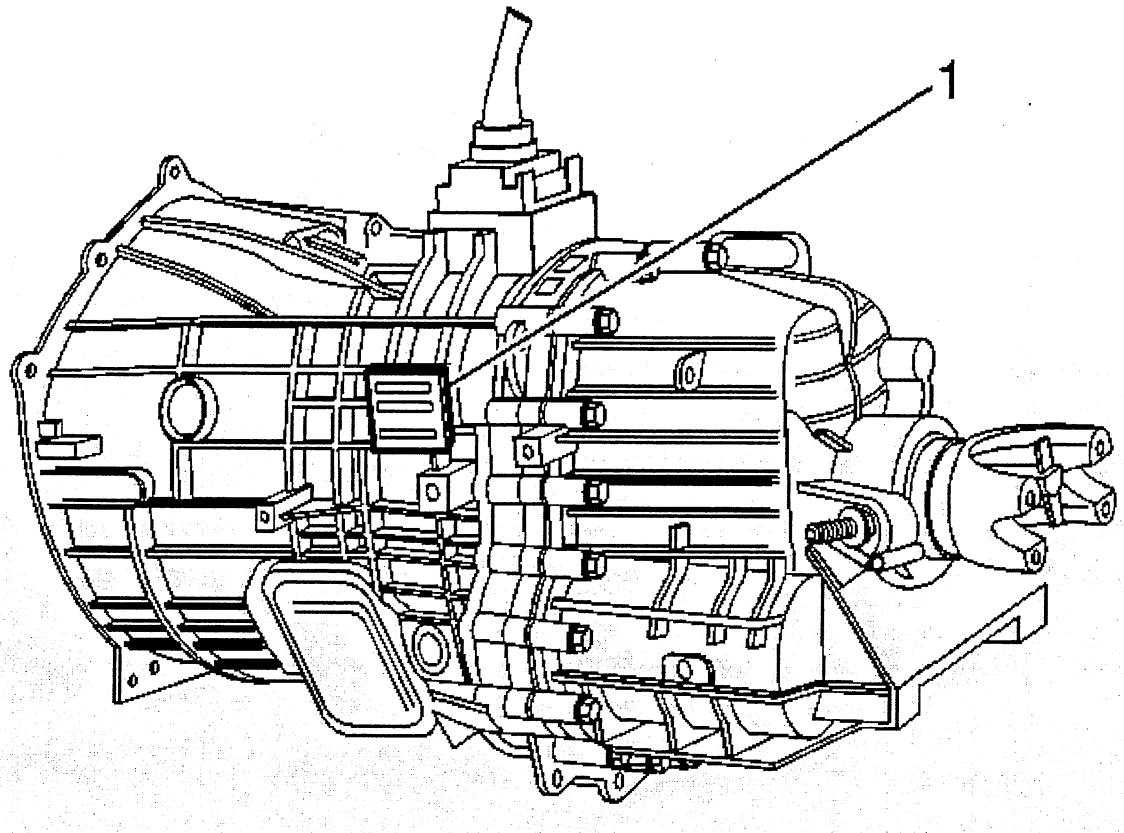

(1) Engine identification tag location.

Transfer Case Identification

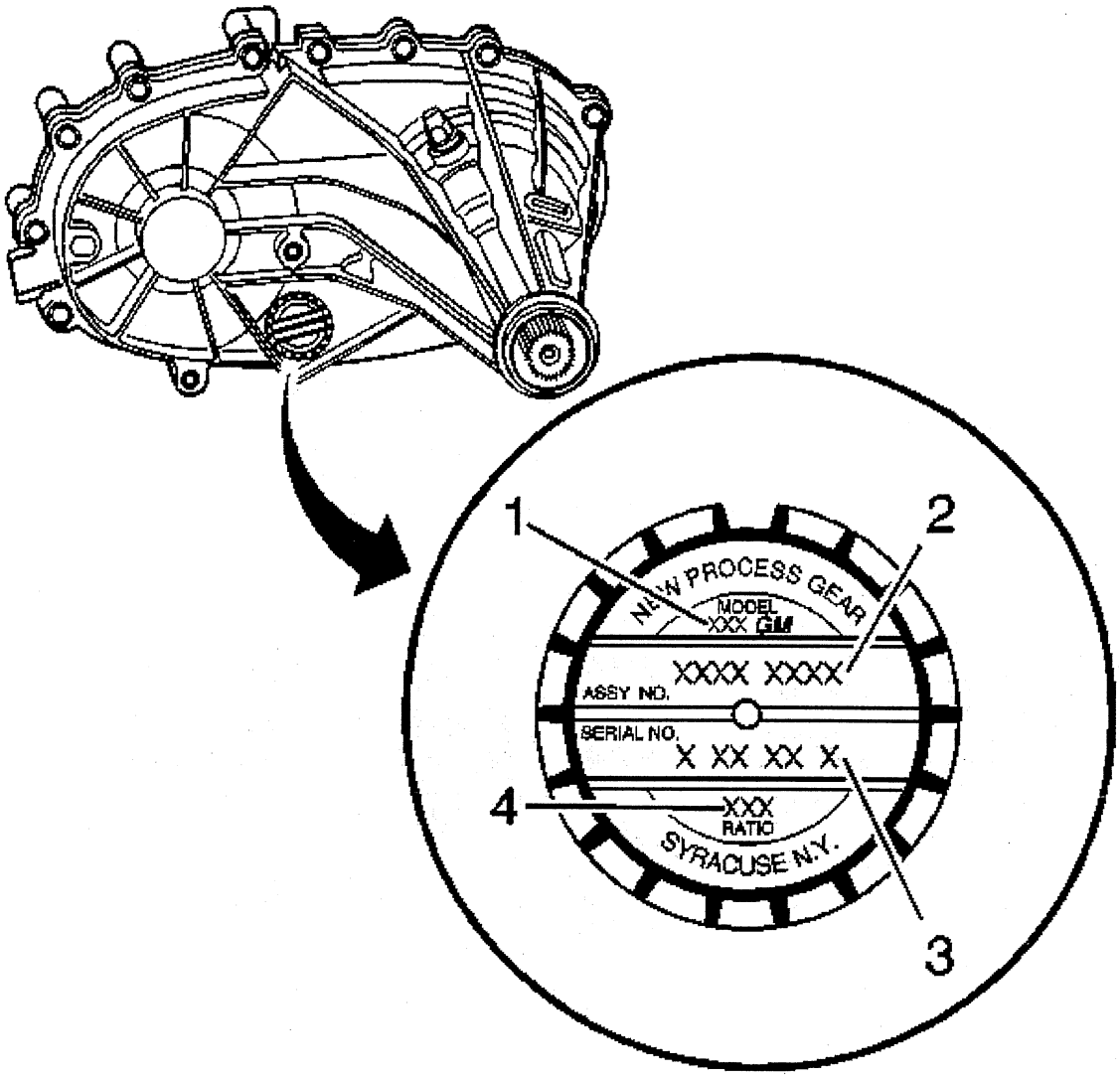

An identification tag is attached to the rear half of the transfer case. The tag provides the following information:

1 Model number (1)
   A First Digit-1 =Single Speed, 2=Two-Speed
   B Second Digit-2 = T Utility, 3 =T-Truck, L-Van, 4 or 6 = K Truck and Utility
   C Third Digit-1 = Manual, 3 = Electric Shift, 6 = Automatic, 9 = All Wheel Drive
2 Assembly number (2)
3 Serial number (Date and Shift Code) (3)
4 Low range reduction ratio (4)

The information on this tag is necessary for servicing the transfer case. If the tag is removed or becomes dislodged during service operations, keep the identification tag with the unit.

Axle Identification – Front

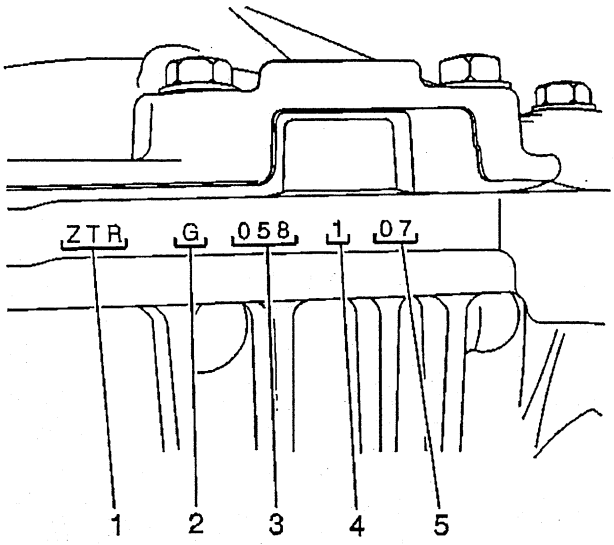

(1) Broadcast Code
(2) Supplier Code (G = American Axle)
(3) Julian Date (Day of Year)
(4) Shift Built (1 = First Shift; 2 = Second Shift) (Optional for 8.25" and 9.25" axles)
(5) Hour Built

Front axle identification information is stamped on the top of the differential carrier assembly.

Axle Identification – Rear

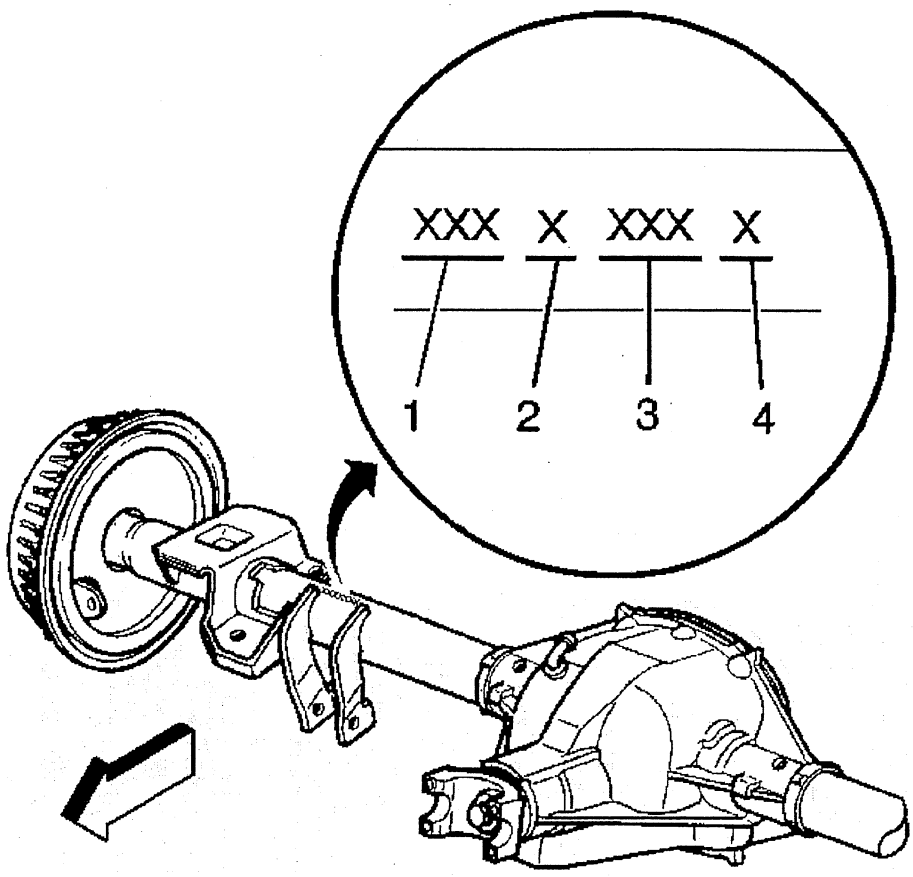

(1) Rear Axle Ratio
(2) Build Source (C = Buffalo; K = Canada)
(3) Julian Date
(4) Shift Built (1 = First; 2 = Second)

All rear axles are identified by a broadcast code on the right axle tube near the carrier. The rear axle identification and manufacturer's codes must be known before attempting to adjust or to repair axle shafts or the rear axle case assembly. Rear axle ratio, differential type, manufacturer, and build date information is stamped on the right axle tube on the forward side.

Label - Vehicle Certification, Tire Place Card, Anti-Theft and Service Parts ID

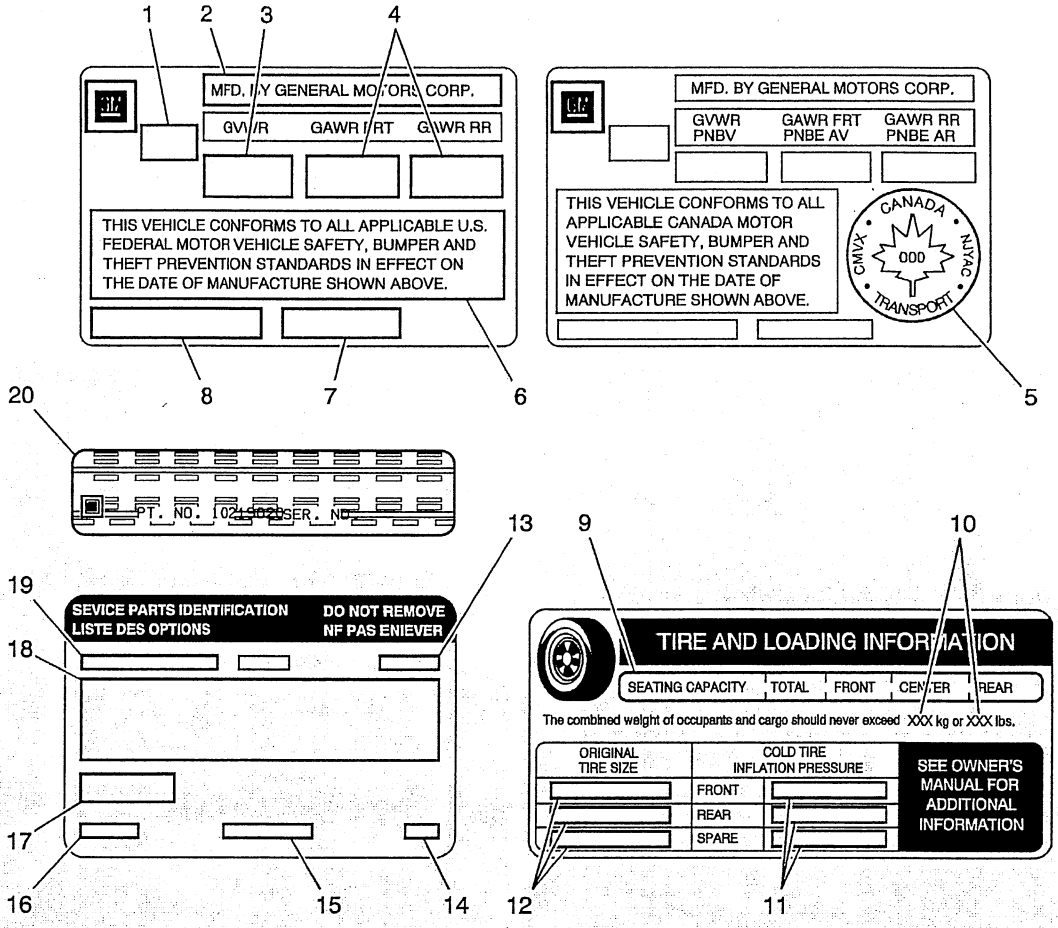

Callout	Description
Vehicle Certification Label The vehicle certification label is located on the driver door and displays the following assessments: Gross Vehicle Weight Rating (GVWR) Gross Axle Weight Rating (GAWR), front and rear The gross vehicle weight (GVW) is the weight of the vehicle and everything it carries. The GVW must not exceed the GVWR. Include the following items when figuring the GVW: The base vehicle weight (factory weight) The weight of all vehicle accessories The weight of the driver and the passengers The weight of the cargo	
1	Name of Manufacturer
2	Gross Vehicle Weight Rating
3	Gross Axle Weight Rating (Front, Rear)
4	Canadian Safety Mark (w/RPO Z49)
5	Certification Statement
6	Vehicle Class Type (Pass Car, etc.)
7	Vehicle Identification Number
8	Date of Manufacture (Mo/Yr)

Callout	Description
Tire Placard	
The tire placard label is located on the driver door and displays the following assessments:	
9	Specified Occupant Seating Positions
10	Maximum Vehicle Capacity Weight
11	Original Equipment Tires Size
12	Tire Pressure, Front, Rear, and Spare (Cold)
Service Parts ID Label	
The vehicle service parts identification label is located in the glove compartment. The label is used to help identify the vehicle original parts and options.	
13	Vehicle Identification Number
14	Engineering Model Number (Vehicle Division, Line and Body Style)
15	Interior Trim Level and Decor
16	Exterior (Paint Color) WA Number
17	Paint Technology
18	Special Order Paint Colors and Numbers
19	Vehicle Option Content
Anti-Theft Label	
20	The Federal law requires that General Motors label certain body parts on this vehicle with the VIN. The purpose of the law is to reduce the number of motor vehicle thefts by helping in the tracing and recovery of parts from stolen vehicles. Labels are permanently affixed to an interior surface of the part. The label on the replacement part contains the letter R, the manufacturer's logo, and the DOT symbol. The anti-theft label must be covered before any painting, and rustproofing procedures, and uncovered after the procedures. Failure to follow the precautionary steps may result in liability for violation of the Federal Vehicle Theft Prevention Standard and possible suspicion to the owner that the part was stolen.

RPO Code List

The production/process codes provide the description of the Regular Production Options (RPOs) used on the vehicle. The RPO list is printed on the Service Parts Identification Label.

Light Duty

RPO	Description
AE7	Seat Front Split, Driver, Passenger
AG1	Adjuster Front Seat Power, Multi-Directional, Driver
AG2	Adjuster Passenger Seat Power, Multi-Directional
AJ1	Windows Deep Tint, All Except W/S and DRS
AL0	Sensor Indicator Inflatable Restraint, Front Passenger/Child Presence Detector
AM7	Rear Seat Folding
AN3	Seat Front, Individual, Non-Bucket
AU0	Lock Control, Remote Entry
AU3	Lock Control Side Door, Electric
A04	Windshield Tinted, Less Upper Shadeband
A28	Window RR-Full Width, Sliding
A31	Window Power Operated, All Doors
A95	Seat Front Bucket, High Back, Driver and Passenger Recliner
BAG	Parts Package Export
BA5	Ornamentation-Exterior, Custom
BG9	Covering Floor, Rubber
BS1	Insulation Acoustical Package
BW2	Molding, B/S Deluxe
B2E	Sales-Spring Special Package
B30	Floor Covering, Carpet
B32	Covering Front Floor Mats, Auxiliary
B33	Covering Rear Floor Mats, Auxiliary
B4U	Performance Package, Sport
B4V	Performance Package-High Output, Engine
B58	Covering Floor Mat, Front and Rear, Carpeted Insert
B71	Molding, Wheel Opening, Colored
B81	Molding Body/Side - Delete
B85	Molding, Body/Side, Exterior, Bright
CF5	Roof-Sun, Glass, Sliding, Electric
CJ2	HVAC System, Air Conditioner Front, Automatic Temperature Control, Auxiliary Temperature Control
CJ3	HVAC System, Air Conditioner Front, Manual Temperature Control, Auxiliary Temperature Control
CKD	Vehicle Completely Knocked Down (CKD)
C42	HVAC System Heater, Outside Air, Deluxe
C49	Defogger Rear Window, Electric
C5H	GVW Rating 6,900 lbs
C5M	GVW Rating 6,100 lbs
C5S	GVW Rating 6,600 lbs
C5W	GVW Rating 7,000 lbs
C7H	GVW Rating 6,400 lbs (2900 kg)
DE2	Mirror, Outside Left and Right, Manual Control, Folding, Color
DF2	Mirror, Outside Left and Right, Wide Load, Folding, Stainless Steel
DF5	Mirror, Inside Rearview, Light Sensitive, Compass, Outside Temperature Display
DH6	Mirror, Inside Front Van, Left and Right, Sunshade, Illumination
DK7	Console Roof Interior, Custom

RPO	Description
DK8	Console Roof-Interior, Deluxe
DL3	Mirror, Outside Left and Right, Remote Control, Electric, Heated, Power Folding, Turn Signal Indicator, Light Sensitive, Color
DL8	Mirror, Outside Left and Right, Remote Control, Electric, Heated
DNH	Box-Right Seat, Stowage
DPN	Mirror, Outside Left and Right, Wide Load, Vertical Glass, Manual Extending, Manual Folding, Heated, Turn Signal Indicator, Remote Control
DT4	Ashtray Cigarette Lighter
D07	Console, Front Compartment, Floor, Custom
D31	Mirror-Inside Rearview-Tilt (Duplicate With D36)
EQ9	Equipment-Underride Protection
EVA	Test DVT, EVAP Emission Requirement
EXP	Export
E62	Body Equipment Step Side, Pick-up Box
E63	Body Equipment Fleetside, Pick-up Box
E95	Cover Tonneau, Rear Compartment
FE9	Certification-Emission, Federal
F60	Spring Front Heavy Duty
GT4	Axle Rear 3.73 Ratio
GT5	Axle Rear 4.10 Ratio
GU5	Axle Rear-3.23 Ratio
GU6	Axle Rear 3.42 Ratio
G80	Axle Positraction Limited Slip
HOT	Appearance Package GMC "Hot Truck"
HP2	Hybrid Propulsion Electric , AHS2
JC4	Brake Vac Power, Disc/Disc, 7,200 lb
JF3	Brake-Vac Power, 17" Disc/Drum, W/ABS, 7,000 LBS
JF4	Brake-Vac Power, 17" Disc/Drum, W/ABS, 6,400 LBS
JH1	Brake Hydraulic Power, Disc/Disc, 6,400 lbs
KC4	Cooling System-Engine Oil
KG3	Generator 145 AMP
KNP	Cooling System-Transmission, HD
KUP	Throttle Control Electronic
KW1	Generator-160 AMP
K05	Heater Engine Block
K34	Cruise Control, Automatic, Electronic
K47	Air Cleaner High Capacity
K68	Generator, 105 Amp
LM7	Engine Gas, 8 Cylinder, 5.3L, MFI, Iron, GM
LQ9	Engine Gas, 8 Cylinder, 6.0L, MFI, Iron, GM, Ho
LR4	Engine Gas, 8 Cylinder, 4.8L MFI, Iron, GM
LU3	Engine Gas, 6 Cylinder, 4.3L, MFI, V6, 90 DEG
L33	Engine Gas, 8 Cylinder, 5.3L, SFI, V8, Alum, HO, GM
L59	Engine Flexible Fuel - Gas/ALC, 8 Cylinder, 5.3L, MFI, V8, GM
MG5	Transmission Manual 5-Speed, Getrag, 84mm, 4.00 1st, O/D
MTF	Provisions - Fire Extinguisher Mounting
MW7	Transmission-Auto 6 SPD, Allison, LCT 1000, 3.10 1st, .71 5th, .62 6th, O/D, Conv Clutch
M30	Transmission-Auto 4 SPD, HMD, 4L60-E, Electronic
M32	Transmission Auto 4-Speed, HMD, 4L60-E, Electronic, HD
M33	Transmission Auto 4-Speed, HMD, 4L60-E, Electronic, Hybrid
M70	Transmission-Auto 4 SPD, HMD, 4L70-E, Super Duty
NB8	Emission Override-California System

RPO	Description
NC1	Emission System California, LEV (Note: Not to be used after 2007 MDL YR for Domestic NAO Passenger Cars and Light Duty Tricks)
NC7	Emission Override-Federal System
NE1	Certification-Emission, Geographically Restricted Registration For Vehicles Up To 14,000 LBS GVW (Use 2003 MDL YR)
NF4	Emission System Clean Fuel, Fleet
NF9	Emission System General, OBD Mil Suppression
NHT	Performance Package-Enhanced Towing
NK5	Steering Wheel-Standard
NP2	Transfer Case, Manual Shift Control, 2 Speed
NP3	Transfer Case, All-Wheel Drive (AWD)
NP5	Steering Wheel, Leather Wrapped
NP8	Transfer Case Active, 2 Speed Push Button Control
NT8	Emission System Federal, Tier 2 A
NT9	Emission System Federal, Tier 2 Phase-out
NU4	Emission System California Level 2 Plus
NW7	Traction Control, Powertrain Management Only
NZZ	Sales Package, Skid Plate Off-Road Spot
N05	Lock Control Fuel Filler Cap
N12	Rear Exit Exhaust System
N93	Wheel - 17 x 7.5, Aluminum
PF4	Wheel - Aluminum - 16 X 7.0
PF9	Wheel - Aluminum Cast - 16 X 7.0
PY9	Wheel-Chrome Appearance - 17 x 7.5
P03	Cover, Wheel - Var 3
P25	Wheel 17 x 7.5, Aluminum, 5 Spoke Premium
P27	Wheel 17 x 7.5, Aluminum, 6 Spoke Premium
P30	Wheel 20x8.5, Aluminum, Sport
P35	Wheel-20 x 805, Chrome Alloy
P96	Equipment, Mexican Modified, Mandatory Base Equipment
QAN	Tire All P265/70R17 - 113S BW R/PE ST TL AL2
QAQ	Tire All - P265/70R17-113H BW R/PE ST TL AL2
QBL	Tire All - P265/70R17-113H BW TL ST OOR
QE4	Wheel Spare - 16 x 6.5 Aluminum
QF7	Wheel - 17 x 7.5, Aluminum, Deluxe
QJM	Tire All P265/70R17 - 113S WOL R/PE ST TL OOR
QJP	Tire All P265/70R17 - 113S BW R/PE ST TL OOR
QNF	Tire All P235/75R16 - 106S BW R/PE ST TL ALS
QNG	Tire All P235/75R16 - 106S WOL R/PE ST TL ALS
QNK	Tire All P245/75R16 - 109S BW R/PE ST TL ALS
QNL	Tire All P245/75R16 - 109S WOL R/PE ST TL ALS
QNM	Tire All - P245/70R17-108H BW TL ST ALS
QPO	Tire All - P245/70R17-108S WOL TL ST ALS
QPR	Tire All - P245/70R17-108S BW TL ST ALS
QR9	Wheel - 20 x 8.5, Aluminum Cast, Chromed, 5 Spokes
QSS	Tire All P275/55R20 - 111S BW TL ST AL2
QS8	Wheel - 20 x 8.5, Aluminum Cast, Chromed, 7 Spokes
QVL	Tire All P265/70R17 - 113S BW R/PE ST TL ALS
QVM	Tire All P265/70R17 - 113S WOL R/PE ST TL ALS
QXR	Tire All - LT245/70R17/C BW ST TL AT
Q4B	GVW Rating 6,200 lbs
SAF	Lock Spare Tire, Hoist Shaft

RPO	Description
TBD	20" Chrome Wheel - New Chrome Wheel
TL1	Grille Special
TP2	Battery Auxiliary
TRB	Grille Radiator, Body Color
TRW	Provisions Lamp, Roof Mounted
TR3	Grille Radiator, Body Color, w/Chrome Emblem
TZ0	Transmission Manual 5-Speed, Tremac, 85mm, 3.82 1st, 0.83 5th
T07	Generator - Delete
T2H	Exterior Ornamentation, Export Unique Requirements
T62	Lamp System Daytime Running - Delete
T64	Battery - Delete
T78	Headlamps Control - Delete
T96	Fog Lamps, Front
T98	Stamping - Vehicle Identification Number
UB0	Radio AM/FM Stereo, Seek/Scan, CD, Auto Tone, Data System Clock, ETR
UB1	Radio AM/FM Stereo, Seek/Scan, Auto Reverse Music Search Cassette, CD, Auto Tone, Data System Clock, ETR
UC2	Speedometer Instrument, Kilo and Miles, Kilo Odometer, Positive Bias
UC6	Radio AM/FM Stereo, Seek/Scan, RDS, Multiple Compact Disc, Auto Tone Control, Clock, ETR
UD4	Alarm Vehicle Speed, 120 km/h
UE1	Communication System Vehicle, G.P.S. 1
UG1	Universal Garage Door Opener
UJ6	Indicator-Low Tire Pressure
UK3	Accessory Steering Wheel Control
UK6	Radio Control Rear Seat and Earphone Jacks
UL2	Frequencies-European
UL4	Frequencies, South American
UL5	Radio - Delete
UL8	Frequencies, Saudi Arabian
UM7	Radio AM/FM Stereo, Seek/Scan, Clock, ETR
UQ3	Speaker System, Performance Enhanced Audio
UQ5	Speaker System 4, Dual Front Door Mounted, Dual Extended Range Quarter Mounted
UQ7	Speaker System Premium Performance, Enhanced Audio, Bose®
UQ9	Speaker System - Delete
UY2	Wiring Provisions for Camper/5th Wheel Trailer
U01	Lamp Five, Roof Marker, Truck
U1S	Player Multiple Compact Disc
U19	Speedometer Instrument, Kilo and Miles, Kilo Odometer
U2J	Digital Audio System-S Band "Not Installed"
U2K	Digital Audio System S-Band
U42	Entertainment Package Rear Seat
VBX	Language Label Arabic
VB3	Bumper Rear Step, Chrome, Impact Strip
VCG	Provisions - International Switch/Control Symbols
VCL	Certification - Emission, Clean Fuel Vehicle, Fleet
VC4	Label Price/Fuel Economy, Puerto Rico and Virgin Islands
VC5	Label Shipping, Except US, US Possessions, or Japan
VC7	Label Price/Fuel Economy, Guam
VF1	Bumper Front - Painted, Steel, Primed
VF3	Bumper Rear - Painted, Steel, Primed
VF7	Bumper Rear Step - Delete
VGC	Protector Film, Paint Etch Preventive

RPO	Description
VG3	Bumper Front Impact Strip
VJ3	Label, Plate - ECE Approval and Vehicle Identification
VJ7	Label, Fuel - Unleaded Only
VK3	License Plate, Front Mounting Package
VPH	Vehicle Preparation Overseas Delivery
VR4	Trailer Hitch Weight Distributing Platform
VR6	Hook Tie-Down Shipping
VT4	Bumper Front Color Keyed
VT5	Bumper Rear Color Keyed
VYU	Provisions, Snow Plow Preparation
VZ2	Calibration Speedometer A
V22	Grille Radiator, Chrome
V43	Bumper, Rear Step, Color
V60	Vehicle Statement Gulf States Organization, Incomplete Vehicle
V73	Vehicle Statement, USA/ Canada
V76	Hook - Tow
V78	Vehicle Statement - Delete
V87	Vehicle Statement Gulf States Organization
W86	Equipment: Miscellaneous Equipment for Venezuela (GMV Controlled)
W99	Equipment: Miscellaneous Equipment for Venezuela (GM Platform Controlled)
X52	Miscellaneous Equipment for Guam, Puerto Rico/US Virgin Islands
X88	Market Brand - Chevrolet
YE9	Convenience Package - Comfort and Decor Level #3
YF5	Certification - Emission, California
Y91	Merchandised Package Luxury Edition
ZX3	Chassis Package - Manual Select Damping
Z49	Export Canadian Modification Mandatory Base Equipment
Z5X	Mirror Provisions Arabic Language
Z60	Chassis Package High Performance
Z71	Chassis Package "Off Road"
Z82	Trailer Provisions Special Equipment, H. D.
Z83	Chassis Package Solid Smooth Ride
Z85	Chassis Package Increased Capacity
Z88	Market Brand - GMC

Heavy Duty

RPO	Description
AE7	Seat Front Split, Driver, Passenger
AG1	Adjuster Front Seat Power, Multi-Directional, Driver
AG2	Adjuster Passenger Seat Power, Multi-Directional
AJ1	Windows Deep Tint, All Except W/S and DRS
AM7	Rear Seat Folding
AN3	Seat Front, Individual, Non-Bucket
AU0	Lock Control, Remote Entry
AU3	Lock Control Side Door, Electric
A04	Windshield Tinted, Less Upper Shadeband
A28	Window RR-Full Width, Sliding
A31	Window Power Operated, All Doors
A95	Seat Front Bucket, High Back, Driver and Passenger Recliner
BAG	Parts Package Export
BG9	Covering Floor, Rubber
BL4	Label - Price Refer Geographic Chart

RPO	Description
B30	Floor Covering, Carpet
B32	Covering Front Floor Mats, Auxiliary
B33	Covering Rear Floor Mats, Auxiliary
B71	Molding, Wheel Opening, Colored
B85	Molding, Body/Side, Exterior, Bright
CF5	Roof-Sun, Glass, Sliding, Electric
CJ2	HVAC System, Air Conditioner Front, Automatic Temperature Control, Auxiliary Temperature Control
CJ3	HVAC System, Air Conditioner Front, Manual Temperature Control, Auxiliary Temperature Control
CKD	Vehicle - Completely Knocked Down (CKD)
C42	HVAC System Heater, Outside Air, Deluxe
C49	Defogger Rear Window, Electric
C4M	GVW Rating - 9,900 LBS
C6P	GVW Rating - 8,600 LBS (900 Kg)
C6W	GVW Rating - 9,200 LBS
C6Y	GVW Rating - 9,600 LBS
C7L	GVW Rating - 12,000 LBS
C7W	GVW Rating - 11,400 LBS
DE2	Mirror, Outside Left and Right, Manual Control, Folding, Color
DF2	Mirror, Outside Left and Right, Wide Load, Folding, Stainless Steel
DF5	Mirror, Inside Rearview, Light Sensitive, Compass, Outside Temperature Display
DG5	Mirror Outside - LH and RH, Wide Load, Large
DK7	Console Roof Interior, Custom
DK8	Console Roof-Interior, Deluxe
DL3	Mirror, Outside Left and Right, Remote Control, Electric, Heated, Power Folding, Turn Signal Indicator, Light Sensitive, Color
DL8	Mirror, Outside Left and Right, Remote Control, Electric, Heated
DNH	Box-Right Seat, Stowage
DPN	Mirror, Outside Left and Right, Wide Load, Vertical Glass, Manual Extending, Manual Folding, Heated, Turn Signal Indicator, Remote Control
DT4	Ashtray Cigarette Lighter
D07	Console, Front Compartment, Floor, Custom
D44	Mirror Outside - Color
EVA	Test DVT, EVAP Emission Requirement
EXP	Export
E63	Body Equipment Fleetside, Pick-up Box
E95	Cover Tonneau, Rear Compartment
FE9	Certification-Emission, Federal
F60	Spring Front Heavy Duty
GEC	GVW Rating - 9,800 LBS
GTY	Axle - Wide Track
GT4	Axle Rear 3.73 Ratio
GT5	Axle Rear 4.10 Ratio
G80	Axle Positraction Limited Slip
HVY	Identification - 2 Inch Body Raise, H.D. Model
JH6	Brake - HYD Power, 4 Wheel Disc, 9,900 LBS
JH7	Brake - HYD Power, 4 Wheel Disc, 12,300 LBS (Duplicate with JH9)
JVA	Brake System - Antilock Brake - Delete
KC4	Cooling System-Engine Oil
KG3	Generator 145 AMP

RPO	Description
KL5	Modification - Engine, Natural Gas
KNP	Cooling System - Transmission, HD
KUP	Throttle Control Electronic
K05	Heater Engine Block
K34	Cruise Control, Automatic, Electronic
K47	Air Cleaner High Capacity
K65	Generator - 105 Amp, DUAL
K68	Generator, 105 Amp
LBZ	Engine - Diesel, 8 Cyl.,6.6L, DI, V8, Turbo-High, HO, Duramax
LLY	Engine - Diesel, 8 Cyl, 6.6L, DI, V8, Turbo-High, Duramax
LQ4	Engine - Gas, 8 Cyl, 6.0L, MFI, Iron, GM
L18	Engine - Gas, 8 Cyl, 8.1L, MFI
L31	Engine - Gas, 8 Cyl, 5.7L, CPI
ML6	Transmission - Manual 6 Speed, ZF, 105 mm, 5.79 1st, 0.72 6th, O/D
MTF	Provisions - Fire Extinguisher Mounting
MT1	Transmission - Automatic 4 Speed, HMD, 4I80-E
MW3	Transmission - Manual 5 Speed, NVG, 109 mm, 5.61 1st, O/D
MW7	Transmission-Auto 6 SPD, Allison, LCT 1000, 3.10 1st, .71 5th, .62 6th, O/D, Conv Clutch
M1F	Power Take Off - RR PTO
M96	Transmission - Manual 5 Speed, Tremec, 109 mm, 5.81 1st, 0.77 5th
NA1	Emission System GVW - Less Than 8,500 Lb
NA4	Emission System GVW - Above 8,500 Lb
NC1	Emission System California, LEV (Note: Not to be used after 2007 MDL YR for Domestic NAO Passenger Cars and Light Duty Tricks)
NC8	Emission System - California, ULEV (Note: Not to be used After 2007 MDL Year for Domestic NAO Passenger Cars and Light Duty Trucks)
NE1	Certification-Emission, Geographically Restricted Registration For Vehicles Up To 14,000 LBS GVW (Use 2003 MDL YR)
NF2	Emission System - Federal, Tier 1
NF4	Emission System Clean Fuel, Fleet
NF9	Emission System General, OBD Mil Suppression
NP1	Transfer Case - Electric Shift Control, 2 Speed
NP2	Transfer Case, Manual Shift Control, 2 Speed
NP5	Steering Wheel, Leather Wrapped
NP8	Transfer Case Active, 2 Speed Push Button Control
NQZ	Fuel Tank - Auxiliary, RR Mounted, 18 Gal, - Delete
NU4	Emission System California Level 2 Plus
NW7	Traction Control - Powertrain Management Only
NZZ	Sales Package, Skid Plate Off-Road Spot
N05	Lock Control Fuel Filler Cap
PTO	Engine Control - Power Take Off (PTO) Controls
PY0	Wheel - 16 x 6.5, Aluminum
PY2	Wheel - 16 x 6.5, Chrome Appearance
P03	Cover, Wheel - Var 3
P06	Trim Discs - Wheel
P96	Equipment, Mexican Modified, Mandatory Base Equipment
QC1	Wheel - 16 x 7, Steel
QER	Tire All - LT265/75R16/E BW R/PE ST TL OOR (123/120Q)
QIW	Tire All - LT245/75R16/E BW R/PE ST TL OOR 120Q
QIZ	Tire All - LT245/75R16/E BW TL ALS 120Q
SAF	Lock Spare Tire, Hoist Shaft

RPO	Description
SRW	Chassis - Single Rear Wheel, Ride and Handling
TP2	Battery Auxiliary
TQ3	Battery - 770 CCA (Dual)
TRW	Provisions Lamp, Roof Mounted
TR3	Grille Radiator, Body Color, w/Chrome Emblem
T62	Lamp System Daytime Running - Delete
T78	Headlamps Control - Delete
T96	Fog Lamps, Front
T98	Stamping - Vehicle Identification Number
UB0	Radio AM/FM Stereo, Seek/Scan, CD, Auto Tone, Data System Clock, ETR
UB1	Radio AM/FM Stereo, Seek/Scan, Auto Reverse Music Search Cassette, CD, Auto Tone, Data System Clock, ETR
UC2	Speedometer Instrument, Kilo and Miles, Kilo Odometer, Positive Bias
UC6	Radio AM/FM Stereo, Seek/Scan, RDS, Multiple Compact Disc, Auto Tone Control, Clock, ETR
UD4	Alarm Vehicle Speed, 120 km/h
UE1	Communication System Vehicle, G.P.S. 1
UJ6	Indicator-Low Tire Pressure
UK3	Accessory Steering Wheel Control
UK6	Radio Control Rear Seat and Earphone Jacks
UL4	Frequencies, South American
UL5	Radio - Delete
UL8	Frequencies, Saudi Arabian
UM7	Radio AM/FM Stereo, Seek/Scan, Clock, ETR
UQ3	Speaker System, Performance Enhanced Audio
UQ5	Speaker System 4, Dual Front Door Mounted, Dual Extended Range Quarter Mounted
UQ7	Speaker System Premium Performance, Enhanced Audio, Bose®
UQ9	Speaker System - Delete
UY2	Wiring Provisions for Camper/5th Wheel Trailer
U01	Lamp Five, Roof Marker, Truck
U19	Speedometer Instrument, Kilo and Miles, Kilo Odometer
U2J	Digital Audio System-S Band "Not Installed"
U2K	Digital Audio System - S - Band
U2K	Digital Audio System S-Band
U42	Entertainment Package Rear Seat
VBX	Language Label Arabic
VB3	Bumper Rear Step, Chrome, Impact Strip
VCL	Certification - Emission, Clean Fuel Vehicle, Fleet
VC0	Vehicle - Label, Noise Control Information
VC4	Label Price/Fuel Economy, Puerto Rico and Virgin Islands
VC5	Label Shipping, Except US, US Possessions, or Japan
VC7	Label Price/Fuel Economy, Guam
VF7	Bumper Rear Step - Delete
VGC	Protector Film, Paint Etch Preventive
VG3	Bumper Front Impact Strip
VJ3	Label, Plate - ECE Approval and Vehicle Identification
VK3	License Plate, Front Mounting Package
VPH	Vehicle Preparation Overseas Delivery
VR4	Trailer Hitch Weight Distributing Platform
VR6	Hook Tie-Down Shipping
VYU	Provisions, Snow Plow Preparation
VZ2	Calibration Speedometer A

RPO	Description
V10	Provision Options - Cold Weather
V22	Grille Radiator, Chrome
V43	Bumper, Rear Step, Color
V60	Vehicle Statement Gulf States Organization, Incomplete Vehicle
V73	Vehicle Statement, USA/ Canada
V76	Hook - Tow
V78	Vehicle Statement - Delete
V87	Vehicle Statement Gulf States Organization
W86	Equipment: Miscellaneous Equipment for Venezuela (GMV Controlled)
W99	Equipment: Miscellaneous Equipment for Venezuela (GM Platform Controlled)
XEC	Tire Front - LT215/85R16/E BW R/ST ST TL HWY
XEF	Tire Front - LT215/85R16/E BW R/PE ST TL OOR
XYK	Tire Front - LT215/85R16/D BL R/PE ST TL HWY
XYL	Tire Front - LT215/85R16/D BW R/PE ST TL OOR
X52	Miscellaneous Equipment for Guam, Puerto Rico/US Virgin Islands
X88	Market Brand - Chevrolet
YB3	Plate - Clutch Driven, Part of Engine - Delete
YE9	Convenience Package - Comfort and Decor Level #3
YF2	Sales Package - Ambulance Upfitter
YF5	Certification - Emission, California
ZW9	Body Equipment - Base Body or Chassis
ZX3	Chassis Package - Manual Select Damping
ZYK	Tire Spare - LT215/85R16/D BL R/PE ST TL HWY
Z49	Export Canadian Modification Mandatory Base Equipment
Z5X	Mirror Provisions Arabic Language
Z82	Trailer Provisions Special Equipment, H. D.
Z85	Chassis Package Increased Capacity
Z88	Market Brand - GMC

See the attached documentation for the appropriate RPO code list for your model vehicle.

Technical Information

Maintenance and Lubrication

Capacities - Approximate Fluid

Application	Capacities	
	English	Metric
Axle Capacities		
• Front Drive Axle (8.25")	1.51 quarts	1.43 liters
• Front Drive Axle (9.25")	1.83 quarts	1.73 liters
• Rear Drive Axle (8.6")	2.15 quarts	2.03 liters
• Rear Drive Axle (9.5")	2.75 quarts	2.6 liters
• Rear Drive Axle (9.75")	3.00 quarts	2.84 liters
• Rear Drive Axle (10.5")	2.75 quarts	2.6 liters
• Rear Drive Axle (11.5")	3.17 quarts	3.0 liters
Cooling System		
• VORTEC 4300 V6 Automatic with Front A/C*	14.8 quart	14.0 liters
• VORTEC 4300 V6 Automatic with Front A/C**	16.5 quarts	15.6 liters
• VORTEC 4300 V6 Manual with Front A/C*	15.1 quarts	14.3 liters
• VORTEC 4300 V6 Manual with Front A/C**	16.6 quarts	15.7 liters
• VORTEC 4800 V8 Automatic with Front A/C*	15.2 quarts	14.4 liters
• VORTEC 4800 V8 Automatic with Front A/C**	16.8 quarts	15.9 liters
• VORTEC 4800 V8 Manual with Front A/C*	15.5 quarts	14.7 liters
• VORTEC 4800 V8 Manual with Front A/C**	17.0 quarts	16.1 liters
• VORTEC 5300 V8 Automatic with Front A/C*	15.2 quarts	14.4 liters
• VORTEC 5300 V8 Automatic with Front A/C**	16.8 quarts	15.9 liters
• VORTEC 6000 V8 Automatic*	16.2 quarts	15.3 liters
• VORTEC 6000 V8 Automatic**	16.7 quarts	15.8 liters
• VORTEC 6000 V8 Manual*	16.7 quarts	15.8 liters
• VORTEC 6000 V8 Manual**	16.7 quarts	15.8 liters
• VORTEC 8100 V8 HD Automatic*	25.0 quarts	23.7 liters
• VORTEC 8100 V8 Automatic*	26.9 quarts	25.5 liters
• VORTEC 8100 V8 Automatic**	--	--
• VORTEC 8100 V8 Manual*	27.1 quarts	25.6 liters
* Engine Fan Driven cooling system ** Electric Cooling Fan system		
Engine Oil with Filter		
• 4300 V6	4.5 quarts	4.3 liters
• 4800 V8; 5300 V8; 6000 V8	6.0 quarts	5.7 liters
• 8100 V8	6.5 quarts	6.1 liters
Fuel Tank		
• Short Bed and 2500 LD	26.0 gallons	98.0 liters
• Long Bed and Chassis Cab (Pickup Box Delete)	36.0 gallons	136.0 liters
• Chassis Cab 3500 and 3500HD -- front	27.0 gallons	102.0 liters
• Chassis Cab 3500 and 3500HD -- rear	23.0 gallons	87.0 liters
Transfer Case		
• New Venture Gear 149 (NP3)	2.22 quarts	2.1 liters
• New Venture Gear 246 (NP8)	2.0 quarts	1.9 liters
• New Venture Gear 261 (NP2)	2.0 quarts	1.9 liters

Application	Capacities	
	English	Metric
• New Venture Gear 263 (NP1)	2.0 quarts	1.9 liters
Transmission		
• 4L60-E 4 Spd. HMD Auto Pan Removal	5.0 quarts	4.7 liters
• 4L60-E 4 Spd. HMD Auto (M30) After Complete Overhaul	11.2 quarts	10.6 liters
• 4L80-E Auto (MT1)	7.7 quarts	7.3 liters
• 4L80-E Auto (MT1) After Complete Overhaul	13.5 quarts	12.8 liters
• 5 Spd. Auto Allison (M74) Fluid and Filter Change	7.4 quarts	7.0 liters
• 5 Spd. Auto Allison (M74) After Complete Overhaul	12.7 quarts	12.0 liters
• New Venture Gear 3500 Manual Transmission	2.4 quarts	2.3 liters
• New Venture Gear 4500 Manual Transmission	4.0 quarts	3.8 liters
• 6 Spd. Manual (ZF) (ML6)	6.3 quarts	6.0 liters

Maintenance Items – Gasoline Engine

Part	GM Part Number	ACDelco Part Number
Engine Air Cleaner/Filter		
High Capacity	25313349	A1518C
Standard	25313348*	A1519C*
Oil Filter		
4300 V6	25010792	PF47
4800 V8; 5300 V8; 6000 V8	88984215	PF46
8100 V8	25324052	PF454
Spark Plugs		
4300 V6	25162556	41-932
4800 V8; 5300 V8; 6000 V8	12571164	41-985
8100 V8	12578277	41-983
Wiper Blades (ITTA Type) 22 inches (56.0 cm)	15153642	--

* A1518C high-capacity air cleaner filter may be substituted.

Fluid and Lubricant Recommendations – Gasoline Engine

Usage	Fluid/Lubricant
Engine Oil	Engine oil which meets GM Standard GM6094M and displays the American Petroleum Institute Certified for Gasoline Engines starburst symbol. GM Goodwrench® oil meets all the requirements for your vehicle.
Engine Coolant	50/50 mixture of clean, drinkable water and use only DEX-COOL® coolant.
Hydraulic Brake System	Delco® Supreme 11 Brake Fluid or equivalent DOT-3 brake fluid.
Windshield Washer	GM Optikleen Washer Solvent.
Hydraulic Clutch System (5-Speed Trans.)	Hydraulic Clutch Fluid (GM Part No. U.S. 12345347, in Canada 10953517) or equivalent DOT-3 brake fluid.
Power Steering System	GM Power Steering Fluid (GM Part No. U.S. 89021184, in Canada 89021186).
Manual Transmission (5-Speed with Low Gear, RPO MW3)	GM Goodwrench® Synthetic Manual Transmission Fluid (GM Part No. U.S. 12346190, in Canada 10953477) or equivalent SAE 75W-85 GL-4 gear oil.
Manual Transmission (5-Speed without Low Gear, RPO MG5)	Synchromesh Transmission Fluid (GM Part No. U.S. 12345349, in Canada 10953465).

Usage	Fluid/Lubricant
Manual Transmission (6-Speed)	Synthetic Transmission Fluid approved to Allison Transmission® specification TES-295 (GM Part No. U.S. 12378515, in Canada 88900701).
Automatic Transmission	DEXRON®-III Automatic Transmission Fluid. Look for "Approved for the H-Specification" on the label.
Key Lock Cylinders	Multi-Purpose Lubricant, Superlube (GM Part No. U.S. 12346241, in Canada 10953474).
Floor Shift Linkage	Lubriplate Lubricant Aerosol (GM Part No. U.S. 12346293, in Canada 992723) or lubricant meeting requirements of NLGI #2 Category LB or GC-LB.
Chassis Lubrication	Chassis Lubricant (GM Part No. U.S. 12377985, in Canada 88901242) or lubricant meeting requirements of NLGI #2, Category LB or GC-LB.
Front Axle (Four-Wheel Drive)	SAE 80W-90 Axle Lubricant (GM Part No. U.S. 1052271, in Canada 10950849).
Front Axle (All-Wheel Drive)	SAE 75W-90 Synthetic Axle Lubricant (GM Part No. U.S. 12378261, in Canada 10953455) meeting GM Specification 9986115.
Front Axle	SAE 80W-90 Axle Lubricant (GM Part No. U.S. 1052271, in Canada 10950849).
Rear Axle	SAE 75W-90 Synthetic Axle Lubricant (GM Part No. U.S. 12378261, in Canada 10953455) meeting GM Specification 9986115.
Rear Axle (Steerable)	Synthetic Axle Lubricant; use only GM Part No. U.S. 12378557, in Canada 88901362.*Do not add friction modifier.*
Manual Transfer Case	DEXRON®-III Automatic Transmission Fluid. Look for "Approved for the H-Specification" on the label.
Automatic Transfer Case (Four-Wheel Drive)	AUTO-TRAK II Fluid (GM Part No. U.S. 12378508, in Canada 10953626).
Transfer Case (All-Wheel Drive)	DEXRON®-III Automatic Transmission Fluid. Look for "Approved for the H-Specification" on the label.
Front Axle Propshaft Spline or One-Piece Propshaft Spline (Two-Wheel Drive with Auto. Trans.)	Spline Lubricant, Special Lubricant (GM Part No. U.S. 12345879, in Canada 10953511) or lubricant meeting requirements of GM 9985830.
Rear Driveline Center Spline	Chassis Lubricant (GM Part No. U.S. 12377985, in Canada 88901242) or lubricant meeting requirements of NLGI #2, Category LB or GC-LB.
Hood Hinges	Multi-Purpose Lubricant, Superlube (GM Part No. U.S. 12346241, in Canada 10953474).
Body Door Hinge Pins, Tailgate Hinge and Linkage, Folding Seats, and Fuel Door Hinge	Multi-Purpose Lubricant, Superlube (GM Part No. U.S. 12346241, in Canada 10953474).
Tailgate Handle Pivot Points, Hinges, Latch Bolt, and Linkage	Multi-Purpose Lubricant, Superlube (GM Part No. U.S. 12346241, in Canada 10953474).
Weatherstrip Conditioning	Dielectric Silicone Grease (GM Part No. U.S. 12345579, in Canada 992887).
Weatherstrip Squeaks	Synthetic Grease with Teflon, Superlube (GM Part No. U.S. 12371287, in Canada 10953437).

Maintenance Items – Diesel Engine

Part	GM Part Number	ACDelco Part Number
Oil Filter	88917036	PF2232
Engine Air Cleaner/Filter	15282462	A2947C
Fuel Filter	97385488	TP1298A

Fluid and Lubricant Recommendations – Diesel Engine

Usage	Fluid/Lubricant
Engine Oil (Diesel Engine)	Engine oils with the letters CI-4 or CH-4 are best for your vehicle. The CI-4 or CH-4 designation may appear either alone, or in combination with other API designations, such as API CI-4/SL. These letters show American Petroleum Institute (API) levels of quality. GM Goodwrench® oil meets all the requirements for your vehicle.
Engine Coolant	50/50 mixture of clean, drinkable water and use only DEX-COOL® Coolant.
Hydraulic Brake System	Delco® Supreme 11 Brake Fluid or equivalent DOT-3 brake fluid.
Windshield Washer	GM Optikleen Washer Solvent.
Hydraulic Clutch System (5-Speed Trans.)	Hydraulic Clutch Fluid (GM Part No. U.S. 12345347, in Canada 10953517) or equivalent DOT-3 brake fluid.
Hydraulic Clutch System (6-Speed Trans.)	Hydraulic Clutch Fluid. Use only GM Part No. U.S. 88958860, in Canada 88901244, Super DOT-4 brake fluid.
Power Steering System	GM Power Steering Fluid (GM Part No. U.S. 89021184, in Canada 89021186).
Manual Transmission (5-Speed with Low Gear, RPO MW3)	GM Goodwrench Synthetic Manual Transmission Fluid (GM Part No. U.S. 12346190, in Canada 10953477) or equivalent SAE 75W-85 GL-4 gear oil.
Manual Transmission (5-Speed without Low Gear, RPO MG5)	Synchromesh Transmission Fluid (GM Part No. U.S. 12345349, in Canada 10953465).
Manual Transmission (6-Speed)	Synthetic Transmission Fluid approved to Allison Transmission specification TES-295 (GM Part No. U.S. 12378515, in Canada 88900701).
Automatic Transmission	DEXRON®-III Automatic Transmission Fluid. Look for "Approved for the H-Specification" on the label.
Key Lock Cylinders	Multi-Purpose Lubricant, Superlube (GM Part No. U.S. 12346241, in Canada 10953474).
Floor Shift Linkage	Lubriplate Lubricant Aerosol (GM Part No. U.S. 12346293, in Canada 992723) or lubricant meeting requirements of NLGI #2 Category LB or GC-LB.
Chassis Lubrication	Chassis Lubricant (GM Part No. U.S. 12377985, in Canada 88901242) or lubricant meeting requirements of NLGI #2, Category LB or GC-LB.
Front Axle	SAE 80W-90 Axle Lubricant (GM Part No. U.S. 1052271, in Canada 10950849).
Rear Axle	SAE 75W-90 Synthetic Axle Lubricant (GM Part No. U.S. 12378261, in Canada 10953455) meeting GM Specification 9986115.
Manual Transfer Case	DEXRON®-III Automatic Transmission Fluid. Look for "Approved for the H-Specification" on the label.
Automatic Transfer Case	AUTO-TRAK II Fluid (GM Part No. U.S. 12378508, in Canada 10953626).
Front Axle Propshaft Spline or One-Piece Propshaft Spline (Two-Wheel Drive with Auto. Trans.)	Spline Lubricant, Special Lubricant (GM Part No. U.S. 12345879, in Canada 10953511) or lubricant meeting requirements of GM 9985830.

Usage	Fluid/Lubricant
Rear Driveline Center Spline	Chassis Lubricant (GM Part No. U.S. 12377985, in Canada 88901242) or lubricant meeting requirements of NLGI #2, Category LB or GC-LB.
Hood Hinges	Multi-Purpose Lubricant, Superlube (GM Part No. U.S. 12346241, in Canada 10953474).
Body Door Hinge Pins, Tailgate Hinge and Linkage, Folding Seats, and Fuel Door Hinge	Multi-Purpose Lubricant, Superlube (GM Part No. U.S. 12346241, in Canada 10953474).
Tailgate Handle Pivot Points, Hinges, latch Bolt, and Linkage	Multi-Purpose Lubricant, Superlube (GM Part No. U.S. 12346241, in Canada 10953474).
Weatherstrip Conditioning	Dielectric Silicone Grease (GM Part No. U.S. 12345579, in Canada 992887).
Weatherstrip Squeaks	Synthetic Grease with Teflon, Superlube (GM Part No. U.S. 12371287, in Canada 10953437).

GM Oil Life System - Resetting

The engine oil life monitor will indicate when to change the engine oil - usually between 5 000 km (3,000 miles) and 16 000 km (10,000 miles) since the last oil change. Under severe conditions, the CHANGE OIL SOON light may be displayed before 5 000 km (3,000 miles). The vehicle must not be driven more than 16 000 km (10,000 miles) or 12 months without an oil change.

Reset the oil life monitor when the oil has been changed, use the following procedure.

1. Turn the ignition key to the RUN position.
2. Fully push and release the accelerator pedal 3 times within 5 seconds.
3. If the Change Oil Soon light flashes, the system is resetting.
4. Start the vehicle.
5. The oil life will change to 100%.
6. If the Change Oil Soon light comes back on, the system has not reset. Repeat the procedure.

Descriptions and Operations

Power Steering System

Without Electro-Hydraulic Steering

The hydraulic power steering pump is a constant displacement vane-type pump that provides hydraulic pressure and flow for the power steering gear. The hydraulic power steering pumps are either belt-driven or direct-drive, cam-driven.

The power steering fluid reservoir holds the power steering fluid and may be integral with the power steering pump or remotely located. The following locations are typical locations for the remote reservoir:

- Mounted to the front of the dash panel
- Mounted to the inner fender
- Mounted to a bracket on the engine

The 2 basic types of power steering gears are listed below:

- A recirculating ball system
- A rack and pinion system

In the recirculating ball system, a worm gear converts steering wheel movement to movement of a sector shaft. A pitman arm attached to the bottom of the sector shaft actually moves one tie rod and an intermediate rod move the other tie rod.

In the rack and pinion system, the rack and the pinion are the 2 components that convert steering wheel rotation to lateral movement. The steering shaft is attached to the pinion in the steering gear. The pinion rotates with the steering wheel. Gear teeth on the pinion mesh with the gear teeth on the rack. The rotating pinion moves the rack from side to side. The lateral action of the rack pushes and pulls the tie rods in order to change the direction of the vehicle's front wheels.

The power steering pressure hose connects the power steering pump union fitting to the power steering gear and allows pressurized power steering fluid to flow from the pump to the gear.

The power steering return hose returns fluid from the power steering gear back to the power steering fluid reservoir. The power steering return line may contain an integral fin-type or line-type power steering fluid cooler.

In a typical power steering system, a pump generates hydraulic pressure, causing fluid to flow, via the pressure hose, to the steering gear valve assembly. The steering gear valve assembly regulates the incoming fluid to the right and left chambers in order to assist in right and left turns.

Turning the steering wheel activates the valve assembly, which applies greater fluid pressure and flow to 1 side of the steering gear piston, and lower pressure and flow to the other side of the piston. The pressure assists the movement of the gear piston. Tie rods transfer this force to the front wheels, which turn the vehicle right or left.

With Electro-Hydraulic Steering

The electro-hydraulic power steering (EHPS) module controls the power steering motor which has the function of providing hydraulic power to the brake booster and the steering gear. A secondary function includes the ability to improve fuel economy by operating on a demand basis and the ability to provide speed-dependent variable-effort steering.

The EHPS module controls the EHPS powerpack, an integrated assembly consisting of the following components:

- The electric motor
- The hydraulic pump
- The fluid reservoir
- The reservoir cap
- The reservoir baffles, if required
- The fluid level sensor, if required
- The electronic controller
- The electrical connectors

EHPS Module

The elector-hydraulic power steering (EHPS) module shall interface with the vehicle electrical subsystem to provide connections for the +36-volt (nominal) power supply, for signal inputs necessary to control the EHPS module output and for serial communications. If the 125 A EHPS fuse or the +36-volt circuit supplying the EHPS module is open, the EHPS system will not operate and only communication codes will be set by modules which communicate with the EHPS module. The powertrain control module (PCM) shall act as the gateway to translate controller area network (CAN) messages into class 2 messages when required for diagnostic purposes.

The EHPS module shall receive the following messages from the CAN bus:

- Vehicle speed (direct signal in km/h)
- Service disconnect status
- PRNDL (shift lever) position
- Torque converter clutch (TCC)/Cruise Dump signal (gives zero-adjust brake switch position)

The EHPS module shall output the following messages to the CAN bus:

- Brake pedal rate, position, in-range rationality, and out-of-range diagnosis
- EHPS system status
- Diagnostic messages to driver information center (DIC) via hybrid control module (HCM)
- Diagnostic information requested by service technicians via Tech 2 link (class 2 via PCM)
- Steering wheel sensor diagnostic message (in-range, out-or-range failure)

The EHPS module receives several hardwire signals. Digital steering wheel speed signals from the steering wheel sensor mounted on the steering column and an analog brake pedal position signal from the brake-pedal mounted brake pedal position (BPP) sensor .

The steering wheel speed sensor outputs 3 digital signals characterizing the steering wheel position. The digital output consist of 3 open collector output data lines referred to as phase A, phase B, and Index. The normal operating range of the digital signals is plus or minus 720 degrees of steering wheel rotation. Phase A and phase B are 90 degrees out of phase to provide quadrature pulsed data corresponding to steering shaft rotational displacement and direction. The signal is resolved to within 1 mechanical degree of resolution. The index output references a steering wheel mechanical position of 0° plus or minus 10 degrees (steering wheel centered) and is repeated every 360 degrees of steering wheel rotation.

The BPP sensor outputs an analog signal, referenced to 5 volts, which may increase or decrease monotonically with brake pedal depression. The sensor analog output shall have a specified electrical output over a mechanical range of 32 degrees (rotation of the brake pedal pivot). Out-of-range values will

be provided outside of the 32 degrees range. The electrical range of the BPP sensor motion is -55 degrees to +25 degrees . The mechanical range of the BPP sensor is -70 degrees to +40 degrees.

The EHPS module also receives ignition key position signals. These signals are the ignition signal and the accessory signal. The EHPS module receives an ignition input (ignition 1) on the 24-way signal connector. Ignition signal logic is defined as follows:

- When the ignition switch is in the RUN or CRANK positions, then Ignition 1 = high, greater than 6 volts for more the 50 milliseconds.
- When the ignition switch is in the LOCK/OFF or ACCY positions, then Ignition 1 = low, less than 3 volts for more than 0.5 milliseconds.

The EHPS module receives an input from the ignition 0 circuit indicating when the key is in the ACCY position. This input has 2 functions, to provide an independent wake-up signal in the event of loss of the ignition input, and to activate the EHPS module when the key remains in the ACCY position. The ACCY signal logic is defined as follow:

- When the ignition switch is in the ACC or RUN positions, then Ignition 0 = high, greater than 6 volts for more than 50 milliseconds.
- When the ignition switch is in the LOCK/OFF or CRANK positions, the Ignition 0 = low, less than 3 volts for more than 5 milliseconds.

The EHPS module will function normally when the voltage at the EHPS connector is in the range of 34-50 volts. If the supply voltage at the EHPS connector drops below 18 volts for more than 10 ms, the EHPS module shall go into the Standby mode (power stage turned OFF). Once the supply voltage rises above 22 volts again, the power stage shall be turned back ON without a key cycle being required. If the supply voltage drops below 12 volts, the EHPS module drivers shall shut down and a key cycle will be required to reset. The EHPS module shall withstand voltage up to a transient voltage of 58 volts for 400 milliseconds. If the supply voltage exceeds 55 volts, the EHPS module drivers shall shut down and a key cycle will be required to reset.

EHPS system performance may be reduced with power steering fluid temperature change. The temperature range at which full performance is achieved is approximately -20 to +105°C (-4 to +220°F). The EHPS system performance will be affected as follows:

- At approximately less than -40°C (-40°F), the system will be disabled.
- At approximately -40 to -29°C (-40 to -20°F), the hydraulic output power reduction less than 50 percent.
- At approximately -29 to -20°C (-20 to -4°F), the hydraulic output power reduction less than 20 percent.
- At approximately -20 to +105°C (-4 to +221°F), the hydraulic output power is at full performance.
- At approximately 105-135°C (220-275°F), the hydraulic output power reduction less than 20 percent.
- At approximately greater than 135°C (275°F), the system will be disabled.

EHPS system performance may also be reduced with voltage change. The voltage range at which full performance is achieved is approximately 34-50 volts. The EHPS system performance will be affected as follows:

- At approximately less than 18 volts, the EHPS system will be disabled.
- At approximately 18-33 volts, the EHPS system performance is reduced.
- At approximately 34-50 volts, the EHPS module will be at full performance.
- At approximately greater than 55 volts, the EHPS module will be disabled.

Whenever a replacement EHPS powerpack is installed, reprogramming is necessary. If the EHPS powerpack is not programmed, DTC C0564 will be set.

Steering Linkage (Non-Rack and Pinion)

The steering linkage consists of the following components:

- A pitman arm
- An idler arm
- A relay rod
- 2 adjustable tie rods

When you turn the steering wheel, the steering gear rotates the pitman arm which forces the relay rod to one side. The tie rods connect to the relay rod with the ball studs. The tie rods transfer the steering force to the wheels. Use the tie rods in toe adjustments. The tie rods are adjustable. The pitman arm support the relay rod. The idler arm pivots on a support attached to the frame rail and the ball stud attaches to the relay rod.

The 2 tie rod are threaded into the tube and secured with jam nuts. Right and left hand threads are used in order to permit the adjustment of toe.

Steering Wheel and Column

The steering wheel and column has 4 primary functions:

- Vehicle steering
- Vehicle security
- Driver convenience
- Driver safety

Vehicle Steering

The steering wheel is the first link between the driver and the vehicle. The steering wheel is fastened to a steering shaft within the column. At the lower end of the column, the intermediate shaft connects the column to the steering gear.

Vehicle Security

Theft deterrent components are mounted and designed into the steering column. The following components allow the column to be locked in order to minimize theft:

- The ignition switch
- The steering column lock
- The ignition cylinder

Driver Convenience

The steering wheel and column may also have driver controls attached for convenience and comfort. The following controls may be mounted on or near the steering wheel or column.

- The turn signal switch
- The hazard switch
- The headlamp dimmer switch
- The wiper/washer switch
- The horn pad/cruise control switch
- The redundant radio/entertainment system controls
- The tilt or tilt/telescoping functions
- Navigation/OnStar Features
- The HVAC controls

Driver Safety

The energy-absorbing steering column compresses in the event of a front-end collision, which reduces the chance of injury to the driver. The mounting capsules break away from the mounting bracket in the event of an accident.

Suspension Description and Operation

Front Suspension

Coil Spring

The front suspension has 2 primary purposes:

- Isolate the driver from irregularities in the road surface.
- Define the ride and handling characteristics of the vehicle.

The front suspension absorbs the impact of the tires travelling over irregular road surfaces and dissipates this energy throughout the suspension system. This process isolates the vehicle occupants from the road surface. The rate at which the suspension dissipates the energy and the amount of energy that is absorbed is how the suspension defines the vehicle's ride characteristics. Ride characteristics are designed into the suspension system and are not adjustable. The ride characteristics are mentioned in this description in order to aid in the understanding of the functions of the suspension system. The suspension system must allow for the vertical movement of the tire and wheel assembly as the vehicle travels over irregular road surfaces while maintaining the tire's horizontal relationship to the road.

This requires that the steering knuckle be suspended between an upper and a lower control arm. The lower control arm attaches from the steering Knuckle at the outermost point of the control arm. The attachment is through a ball and socket type joint. The innermost end of the control arm attached at 2 points to the vehicle frame, through semi-rigid bushings. The upper control arm attaches to the frame in the same fashion. Between the lower control arm and a spring seat on the vehicle's frame, under tension, is a coil spring.

This up and down motion of the steering knuckle as the vehicle travels over bumps is absorbed predominantly by the coil spring. The vertical movement of the steering knuckle as the vehicle travels over irregular road surfaces will tend to compress the spring and spring tension will lead the spring to return to the original, at-rest state. This action isolates the vehicle from the road surface. The upper and lower control arms are allowed to pivot at the vehicle frame in a vertical fashion. The ball joint allows the steering knuckle to maintain the perpendicular relationship to the road surface.

A shock absorber is used in conjunction with this system in order to dampen out the oscillations of the coil spring. A shock absorber is a basic hydraulic cylinder. The shock is filled with oil and has a moveable shaft that connects to a piston inside the shock absorber. Valves inside the shock absorber offer resistance to oil flow and consequently inhibit rapid movement of the piston and shaft. Each end of the shock absorber is connected in such a fashion to utilize this recoil action of a spring alone.

Front suspensions systems utilize a stabilizer shaft. The stabilizer bar connects between the left and right lower control arm assemblies through the stabilizer link and stabilizer shaft insulators. This bar controls the amount of independent movement of the suspension when the vehicle turns. Limiting the independent movement defines the vehicle's handling characteristics on turns.

Torsion Bar

The front suspension has 2 primary purposes:

- Isolate the driver from irregularities in the road surface.
- Define the ride and handling characteristics of the vehicle.

The front suspension absorbs the impact of the tires travelling over irregular road surfaces and dissipates this energy throughout the suspension system. This process isolates the vehicle occupants from the road surface. The rate at which the suspension dissipates the energy and the amount of energy that is absorbed is how the suspension defines the vehicle's ride characteristics. Ride characteristics are designed into the suspension system and are not adjustable. The ride characteristics are mentioned in this description in order to aid in the understanding of the functions of the suspension system. The suspension system must allow for the vertical movement of the tire and wheel assembly as the vehicle travels over irregular road surfaces while maintaining the tire's horizontal relationship to the road.

This requires that the steering knuckle be suspended between an upper and a lower control arm. The lower control arm attaches from the steering knuckle at the outermost point of the control arm. The attachment is through a ball and socket type joint. The innermost end of the control arm is attached at 2 points to the vehicle frame through semi-rigid bushings. The upper control arm attaches to the frame in the same fashion. Attached to the lower control arm is a torsion bar. Torsion bars are steel or steel composite shaft that connects from the lower control arm an adjustable mount at the torsion bar crossmember. The torsion bar functions as a spring in this suspension system. The torsion bar absorbs energy from irregular road surfaces by twisting force along the center axis. The torsion bar has a resistance to this twisting motion and will return to the original, at-rest position similar to that of a spring.

A shock absorber is used in conjunction with this system in order to dampen out the oscillations of the torsion bar. A shock absorber is a basic hydraulic cylinder. The shock is filled with oil and has a moveable shaft that connects to a piston inside the shock absorber. Valves inside the shock absorber offer resistance to oil flow and consequently offer resistance to rapid movement of the piston and shaft. Each end of the shock absorber is connected in such a fashion in order to utilize this recoil action of a torsion bar alone.

Front suspension systems utilize a stabilizer shaft. The stabilizer bar connects between the left and right lower control arm assemblies through the stabilizer link and stabilizer shaft insulators. This bar controls the amount of independent movement of the suspension when the vehicle turns. Limiting the independent movement defines the vehicle's handling characteristics on turns.

Rear Suspension

These vehicles use a leaf spring and a solid rear axle suspension system.

The rear axle assembly is attached to multi-leaf springs with U-bolts. The front ends of the springs are attached to the frame at the front hangers with rubber bushings. The rear ends of the springs are attached to the frame with shackles that use rubber bushings. Shackles allow the springs to change position while the vehicle is in motion.

Two direct double-acting shock absorbers provide ride control. The shock absorbers are angle-mounted between the frame. The shock absorbers are attached with brackets. The brackets are attached to the anchor plate.

The rear spring steel stabilizing shaft helps minimize body roll and sway during cornering. The rear stabilizer shaft is connected to the rear axle and the frame with the following components:

- The rubber insulators
- The clamps
- The link assemblies

Selectable Ride Description and Operation

The selectable ride (SR) suspension system allows the driver to choose between 2 distinct damping levels, firm and normal.

The SR dampers are gas charged units which provide damping by forcing hydraulic fluid through internal orifices within each shock in order to resist suspension movement. Each shock contains an internal solenoid actuator that the SR switch controls. This solenoid actuator controls the size of the orifice that the hydraulic fluid is forced through, thus altering the ride characteristics of the vehicle.

Wheels and Tires

Tire Pressure Monitor Description and Operation

The Tire Pressure Monitor (TPM) system warns the driver when a significant loss of tire pressure occurs in any of the 4 tires, and (w/UK3) allows the driver to display the individual tire pressures, and their locations on the driver information center (DIC).

The system uses the powertrain control module (PCM), body control module (BCM), instrument panel cluster (IPC), DIC, passenger door module (PDM) (w/YE9/5B5), remote control door lock receiver

(RCDLR) (w/o YE9/5B5), a radio frequency (RF) transmitting pressure sensor in each wheel/tire assembly, and the serial data circuit to preform the system functions.

When the vehicle is stationary and the sensor internal roll switches are open for at least 30 seconds, the sensors go into stationary mode. In this mode, the sensors sample tire pressure once every 20 seconds and transmit a stationary mode transmission once every 60 minutes. As vehicle speed increases, centrifugal force closes the sensor internal roll switch causing the sensors to go into drive mode. In this mode, the sensors sample tire pressure once every 30 seconds and transmit a drive mode transmission once every 60 seconds. The PDM/RCDLR receives and translates the data contained in each sensor RF transmission into sensor presence, sensor mode, and tire pressure. The PDM (w/UK3) then sends the tire pressure and tire location data to the DIC via the serial data circuit, where they are displayed as follows:

- LF TIRE XX PSI
- RF TIRE XX PSI
- RR TIRE XX PSI
- LR TIRE XX PSI

The sensors continuously compare their current pressure sample with their last pressure sample and will transmit in re-measure mode whenever a 1.6 psi change in tire pressure has occurred. When the TPM system detects a significant loss of tire pressure, the CHECK TIRE PRESSURE message is displayed on the DIC and the low tire pressure indicator is displayed on the IPC. Both the DIC message and IPC indicator can be cleared by adjusting the tire pressure to the recommended kPa/psi. Refer to Label - Vehicle Certification, Tire Place Card, Anti-Theft and Service Parts ID . The sensor pressure range is 0-703 kPa (0-102 psi). The sensor pressure accuracy from -10 to +70°C (+14 to +158°F) is plus or minus 14 kPa (2 psi).

Fastener Tightening Specifications

Application	Specification	
	Metric	English
Spare Tire Hoist Retaining Bolt	40 N·m	30 lb ft
Wheel Nuts	190 N·m	140 lb ft

General Description

The factory installed tires are designed to operate satisfactorily with loads up to and including the full rated load capacity when these tires are inflated to the recommended pressures.

The following factors have an important influence on tire life:

- Correct tire pressures
- Correct wheel alignment
- Proper driving techniques
- Tire rotation

The following factors increase tire wear:

- Heavy cornering
- Excessively rapid acceleration
- Heavy braking

Tread Wear Indicators Description

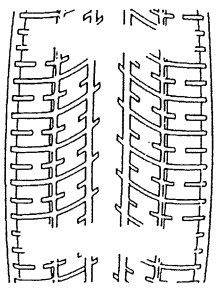

The original equipment tires have tread wear indicators that show when you should replace the tires.

The location of these indicators are at 72 degree intervals around the outer diameter of the tire. The indicators appear as a 6 mm (0.25 in) wide band when the tire tread depth becomes 1.6 mm (2/32 in).

Metric Wheel Nuts and Bolts Description

Metric wheel/nuts and bolts are identified in the following way:

- The wheel/nut has the word Metric stamped on the face.
- The letter M is stamped on the end of the wheel bolt.

The thread sizes of metric wheel/nuts and the bolts are indicated by the following example: M12 x 1.5.

- M = Metric
- 12 = Diameter in millimeters
- 1.5 = Millimeters gap per thread

Tire Inflation Description

When you inflate the tires to the recommended inflation pressures, the factory-installed wheels and tires are designed in order to handle loads to the tire's rated load capacity. Incorrect tire pressures, or under-inflated tires, can cause the following conditions:

- Vehicle handling concerns
- Poor fuel economy
- Shortened tire life
- Tire overloading

Inspect the tire pressure when the following conditions apply:

- The vehicle has been sitting at least 3 hours.
- The vehicle has not been driven for more than 1.6 km (1 mi).
- The tires are cool.

Inspect the tires monthly or before any extended trip. Adjust the tire pressure to the specifications on the tire label. Install the valve caps or the extensions on the valves. The caps or the extensions keep out dust and water.

The kilopascal (kPa) is the metric term for pressure. The tire pressure may be printed in both kilopascal (kPa) and psi. One psi equals 6.9 kPa.

Inflation Pressure Conversion (Kilopascals to PSI)

kPa	psi	kPa	psi
140	20	215	31
145	21	220	32
155	22	230	33
160	23	235	34
165	24	240	35
170	25	250	36
180	26	275	40
185	27	310	45
190	28	345	50
200	29	380	55
205	30	415	60
Conversion: 6.9 kPa = 1 psi			

Tires with a higher than recommended pressure can cause the following conditions:

- A hard ride
- Tire bruising
- Rapid tread wear at the center of the tire

Tires with a lower than recommended pressure can cause the following conditions:

- A tire squeal on turns
- Hard steering
- Rapid wear and uneven wear on the edge of the tread
- Tire rim bruises and tire rim rupture
- Tire cord breakage
- High tire temperatures
- Reduced vehicle handling
- High fuel consumption
- Soft riding

Unequal pressure on the same axle can cause the following conditions:

- Uneven braking
- Steering lead
- Reduced vehicle handling

Tire Description

Caution

Do not mix different types of tires on the same vehicle such as radial, bias, and bias-belted tires except in emergencies because vehicle handling may be seriously affected and may result in loss of control and possible serious injury.

This vehicle is equipped with speed rated tires. Listed below are the common speed rating symbols and the corresponding maximum speeds:

Speed Symbol	Maximum Speed (km/h)	Maximum Speed (mp/h)
S	180	112
T	190	118
U	200	124
H	210	130
V	240	149
Z	Over 240	Over 149

A Tire Performance Criteria (TPC) specification number is molded in the sidewall near the tire size of all original equipment tires. Usually, a specific TPC number is assigned to each tire size. The TPC specification number assures that the tire meets the following GM's performance standards.

- Meets the standards for traction.
- Meets the standards for endurance.
- Meets the standards for dimension.
- Meets the standards for noise.
- Meets the standards for handling.
- Meets the standards for rolling resistance, and others.

The following is required of replacement tires:

- Replacement tires must be of the same size as the original tires.
- Replacement tires must be of the same speed rating as the original tires.
- Replacement tires must be of the same load index as the original tires.
- Replacement tires must be of the same construction as the original tires.
- Replacement tires must have the same TPC specification number as the original tires.

The following may seriously be affected by the use of any other tire size, tire speed rating or tire type:

- May seriously affect the ride.
- May seriously affect the handling.
- May seriously affect the speedometer/odometer calibration.

- May seriously affect the antilock brake system.
- May seriously affect the vehicle ground clearance.
- May seriously affect the trailering capacity.
- May seriously affect the tire clearance to the body.
- May seriously affect the tire clearance to the chassis.

Conditions for Tire Replacement

Replace the tires when one and/or all of the following conditions are evident:

- When the tire(s) is worn to a point where 1.6 mm (2/32 in) or less of tread remains. The tires have built in tread wear indicators that appear between the tread grooves when the tread is worn to 1.6 mm (2/32 in) or less to help in the detection of this condition. Replace the tire when the indicators appear in two or more adjacent grooves at three spots around the tire.
- When the following conditions are evident on the tread:
  - When the tread is cracked.
  - When the tread is cut.
  - When the tread is snagged deeply enough to expose the cord.
  - When the tread is snagged deeply enough to expose the fabric.
  - When the sidewall is snagged deeply enough to expose the cord.
  - When the sidewall is snagged deeply enough to expose the fabric.
- When the following conditions are evident on the tire:
  - When the tire has a bump.
  - When the tire has a bulge (protrusion).
  - When the tire is split.
  - Please note that slight sidewall indentations are normal in radial tires.
- When the following damage is evident on the tire and the damage cannot be correctly repaired because of the size or the location of the damage:
  - When the tire has a puncture.
  - When the tire is cut, or other damage.

Always install new tires in pairs on the same axle. In the event that only one tire is replaced, then pair with the tire having the most tread.

All Seasons Tires Description

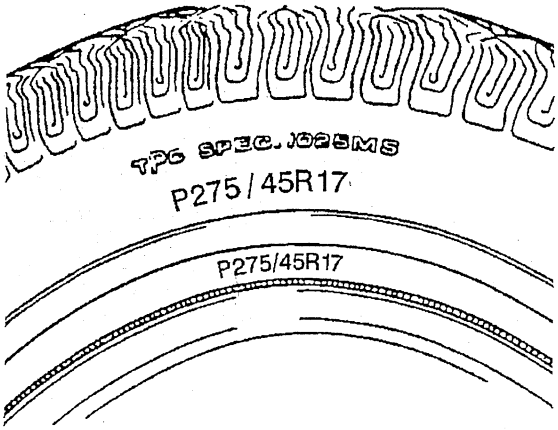

Most GM vehicles are equipped with steel belted all-season radial tires as standard equipment. These tires qualify as snow tires, with a higher than average rating for snow traction than the non-all season radial tires previously used. Other performance areas, such as wet traction, rolling resistance, tread life,

and air retention, are also improved. This is done by improvements in both tread design and tread compounds. These tires are identified by an M + S molded in the tire side wall after the tire size. The suffix MS is also molded in the tire side wall after the TPC specification number.

The optional handling tires used on some vehicles now also have the MS marking after the tire size and the TPC specification number.

P-Metric Sized Tires Description

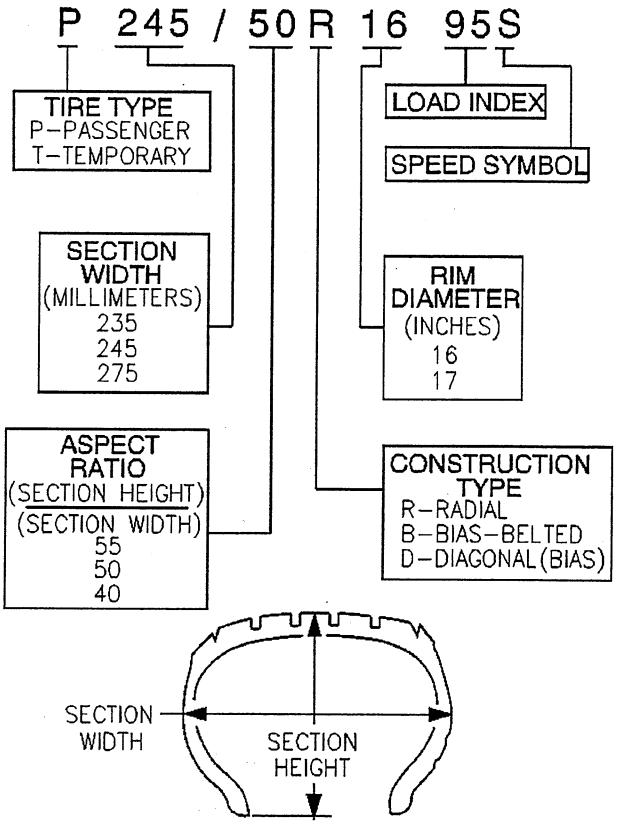

Most P-metric tire sizes do not have exact corresponding alphanumeric tire sizes. Replacement tires should be of the same tire performance criteria (TPC) specification number including the same size, the same load range, and the same construction as those originally installed on the vehicle. Consult a tire dealer if you must replace the P-metric tire with other sizes. Tire companies can best recommend the closest match of alphanumeric to P-metric sizes within their own tire lines.

Driveline System Description and Operation

Driveline/Axle – Propeller Shaft

The Propeller Shaft is a tube with universal joints at both ends which do not require periodic maintenance, that transmit power from the transmission output shaft to the differential.

Front Propeller Shaft Description

The front propeller shaft transmits rotating force from the transfer case to the front differential when the transfer case is engaged. The front propeller shaft connects to the transfer case using a splined slip joint.

One Piece Propeller Shaft Description

A 1 piece propeller shaft uses a splined slip joint to connect the driveline to the transmission or transfer case.

Two Piece Propeller Shaft Description

There are three universal joints used on the two piece propeller shaft. A center bearing assembly is used to support the propeller shaft connection point, and help isolate the vehicle from vibration.

Propeller Shaft Phasing Description

The driveline components in this vehicle have been system balanced at the factory. System balance provides for a smoother running driveline. These components include the propeller shafts, drive axles, pinion shafts and output shafts. Affixed to the rear axle is a system balanced driveline notice indicating that the driveline components have been factory tested. The propeller shaft is designed and built with the yoke lugs/ears in line with each other. This produces the smoothest running shaft possible. A propeller shaft designed with built in yoke lugs in line is known as in -- phase. An out of phase propeller shaft often causes vibration. The propeller shaft generates vibration from speeding up and slowing down each time the universal joint goes around. The vibration is the same as a person snapping a rope and watching the wave reaction flow to the end. An in phase propeller shaft is similar to 2 persons snapping a rope at the same time and watching the waves meet and cancel each other out. A total cancellation of vibration produces a smooth flow of power in the drive line. All splined shaft slip yokes are keyed in order to ensure proper phasing.

Universal Joint Description

The universal joint is connected to the propeller shaft. The universal consist of 4 caps with needle bearings and grease seals mounted on the trunnions of a cross or spider. These bearings and caps are greased at the factory and no periodic maintenance is required. There are 2 universal joints used in a one piece propeller shaft and 3 used in two piece propeller shaft. The bearings and caps are pressed into the yokes and held in place with snap rings, except for 2 bearings on some models witch are strapped onto the pinion flange of the differential. Universal joints are designed to handle the effects of various loads and rear axle windup conditions during acceleration and braking. The universal joint operates efficiently and safely within the designed angle variations. when the design angles are exceeded, the operational life of the joint decreases.

Center Bearing Description

Center bearings support the driveline when using 2 or more propeller shafts. The center bearing is a ball bearing mounted in a rubber cushion that attaches to a frame crossmember. The manufacturer prelubricates and seals the bearing. The cushion allows vertical motion at the driveline and helps isolate the vehicle from vibration.

Wheel Drive Shafts Description and Operation

Front Wheel Drive Shafts are flexible assemblies which consist of the following components:

- Front wheel drive shaft constant velocity joint outer joint.
- Front wheel drive shaft tri-pot joint inner joint.
- The front wheel drive shaft connects the front wheel drive shaft tri-pot joint and the front wheel drive shaft constant velocity joint.
- Wheel Drive Shaft Seal Cover 15 Series
- The front wheel drive shaft tri-pot joint is completely flexible, and moves with an in and out motion.
- The front wheel drive shaft constant velocity joint is flexible but can not move in and out.

The Wheel Drive Shaft is a balanced shaft that transmits rotational force from the front differential to the front wheels when the transfer case is engaged. The wheel drive shaft is mounted to the front differential by bolting the flange of the wheel drive shaft to the flange on the inner output shaft of the front differential. The other end of the wheel drive shaft is splined to fit into and drive the hub assembly when the transfer case is engaged. The tri-pot joint and constant velocity joint on the wheel drive shaft allows the shaft to be flexible to move with the suspension travel of the vehicle.

Front Drive Axle Description and Operation

Selectable Four Wheel Drive (S4WD) Front Axle Description and Operation

The Selectable Four Wheel Drive (S4WD) Front Axle consist of the following components:

- Differential Carrier Housing
- Differential Assembly
- Output Shafts (Left and Right Side)
- Inner Axle Shaft Housing
- Inner Axle Shaft (Right Side)
- Clutch Fork
- Clutch Fork Sleeve
- Electric Motor Actuator

The front axle on Selectable Four Wheel Drive model vehicles uses a central disconnect feature in order to engage and disengage the front axle. When the driver engages the 4WD system, the Transfer Case Control Module sends a signal to the electric motor actuator to energize and extend the plunger inside. The extended plunger moves the clutch fork and clutch fork sleeve across the inner axle shaft and the clutch fork shaft and locks the two shafts together. The locking of the two shafts allows the axle to operate in the same manner as a semi-floating rear axle. A propeller shaft connects the transfer case to the front axle. The differential carrier assembly uses a conventional ring and pinion gear set to transmit the driving force of the engine to the wheels. The open differential allows the wheels to turn at different rates of speed while the axle continues to transmit the driving force. This prevents tire scuffing when going around corners and premature wear on internal axle parts. The ring and pinion set and the differential are contained within the carrier. The axle identification number is located on top of the differential carrier assembly or on a label on the bottom of the right half of differential carrier assembly. The drive axles are completely flexible assemblies consisting of inner and outer constant velocity CV joints protected by thermoplastic boots and connected by a wheel drive shaft.

Full-Time Four Wheel Drive (F4WD) Front Axle Description and Operation

The Full-Time Four Wheel Drive (F4WD) Front Axle consist of the following components:

- Differential Carrier Housing
- Differential Assembly
- Output Shaft (Left Side)
- Inner Axle Shaft Housing
- Inner Axle Shaft (Right Side)

The front axle on Full-Time Four Wheel Drive model vehicles does not have a central disconnect feature in order to engage and disengage the front axle. The left and right axle shafts are connected directly to the differential case assembly. This allows the axle shafts and the propeller shaft to spin continuously. The transfer case controls the amount of torque applied to the front axle. The remaining components are the same as the selectable four wheel drive axle.

Rear Drive Axle Description and Operation

Rear Axles for this vehicle consist of the following components:

- Differential Axle Housing
- Differential Carrier
- Right and left Axle tubes
- Right and left axle shafts

These axles are either Full-Floating or Semi-Floating. These axles can be identified as follows: The Semi-Floating Axle has axle shafts with C-Clips inside the differential carrier on the inner ends of the axle shafts. The Full-Floating Axle has bolts at the hub retaining the axle shafts to the hub assembly. The axles can be identified by the stamping on the right side axle tube They may also be identified by the ring gear size. The ring gear sizes include 8.60, 9.50, 9.75, 10.50 and 11.50 inch axles. The limited slip/locking differential information for these rear axles can be located in the limited slip/locking differential section.

A open differential has a set of four gears. Two are side gears and two are pinion gears. Some differentials have more than two pinion gears. Each side gear is splined to an axle shaft so each axle shaft ; so each axle shaft turns when it's side gear rotates. The pinion gears are mounted on a differential pinion shaft, and the gears are free to rotate on this shaft. The pinion shaft is fitted into a bore in the differential case and is at right angles to the axle shafts. Power is transmitted through the differential as follows: the drive pinion rotates the ring gear. The ring gear being bolted to the differential case, rotates the case, The differential pinion, as it rotates the case, forces the pinion gears against the side gears. When both wheels have equal traction, the pinion gears do not rotate on the pinion shaft because of input force on the pinion gear is equally divided between the two side gears. Therefore, the pinion gears revolve with the pinion shaft, but do not rotate around the shaft itself. The side gears, being splined to the axle shafts and in mesh with the pinion gears rotate the axle shafts. If a vehicle were always driven in a straight line, the ring and pinion gears would be sufficient. The axle shaft could be solidly attached to the ring gear and both driving wheels would turn at equal speed. However, if it became necessary to turn a corner, the tires would scuff and slide because the differential allows the axle shafts to rotate at different speeds. When the vehicle turns a corner, the inner wheel turns slower than the out wheel and slows it's rear axle side gear (as the shaft is splined to the side gear). the rear axle pinion gears will roll around the slowed rear axle side gear, driving the rear axle side gear wheel faster.

Locking/Limited Slip Rear Axle Description and Operation

The locking differential consists of the following components:

- Differential case - 1 or 2 piece
- Locking differential spider - 2 piece case only
- Pinion gear shaft - 1 piece case only
- Differential pinion gear shaft lock bolt - 1 piece case only
- 2 clutch discs sets
- Locking differential side gear
- Thrust block
- Locking differential clutch disc guides
- Differential side gear shim
- Locking differential clutch disc thrust washer
- Locking differential governor
- Latching bracket
- Cam plate assembly

- Differential pinion gears
- Differential pinion gear thrust washers

The optional locking differential (RPO G80) enhances the traction capability of the rear axle by combining the characteristics of a limited-slip differential and the ability of the axle shafts to "lock" together when uneven traction surfaces exist. The differential accomplishes this in 2 ways. First by having a series of clutch plates at each side of the differential case to limit the amount of slippage between each wheel. Second, by using a mechanical locking mechanism to stop the rotation of the right differential side gear, or the left differential side gear on the 10.5 inch axle, in order to transfer the rotating torque of the wheel without traction to the wheel with traction. Each of these functions occur under different conditions.

Limited-Slip Function

Under normal conditions, when the differential is not locked, a small amount of limited-slip action occurs. The gear separating force developed in the right-hand (left-hand side on 10.5 inch axle) clutch pack is primarily responsible for this.

The operation of how the limited-slip function of the unit works can be explained when the vehicle makes a right-hand turn. Since the left wheel travels farther than the right wheel, it must rotate faster than the ring gear and differential case assembly. This results in the left axle and left side gear rotating faster than the differential case. The faster rotation of the left-side gear causes the pinion gears to rotate on the pinion shaft. This causes the right-side gear to rotate slower than the differential case.

Although the side gear spreading force produced by the pinion gears compresses the clutch packs, primarily the right side, the friction between the tires and the road surface is sufficient to overcome the friction of the clutch packs. This prevents the side gears from being held to the differential case.

Locking Function

Locking action occurs through the use of some special parts:

- A governor mechanism with 2 flyweights
- A latching bracket
- The left side cam plate and cam side gear

When the wheel-to-wheel speed difference is 100 RPM or more, the flyweights of the governor will fling out and one of them will contact an edge of the latching bracket. This happens because the left cam side gear and cam plate are rotating at a speed different, either slower or faster, than that of the ring gear and differential case assembly. The cam plate has teeth on its outer diameter surface in mesh with teeth on the shaft of the governor.

As the side gear rotates at a speed different than that of the differential case, the shaft of the governor rotates with enough speed to force the flyweights outward against spring tension. One of the flyweights catches its edge on the closest edge of the latching bracket, which is stationary in the differential case. This latching process triggers a chain of events.

When the governor latches, it stops rotating. A small friction clutch inside the governor allows rotation, with resistance, of the governor shaft while one flyweight is held to the differential case through the latching bracket. The purpose of the governor's latching action is to slow the rotation of the cam plate as compared to the cam side gear. This will cause the cam plate to move out of its detent position.

The cam plate normally is held in its detent position by a small wave spring and detent humps resting in matching notches of the cam side gear. At this point, the ramps of the cam plate ride up on the ramps of the cam side gear, and the cam plate compresses the left clutch pack with a self-energizing action.

As the left clutch pack is compressed, it pushes the cam plate and cam side gear slightly toward the right side of the differential case. This movement of the cam side gear pushes the thrust block which compresses the right-hand side gear clutch pack.

At this point, the force of the self-energizing clutches and the side gear separating force combine to hold the side gears to the differential case in the locking stage.

The entire locking process occurs in less than 1 second. The process works with either the left or right wheel spinning, due to the design of the governor and cam mechanism. A torque reversal of any kind will unlatch the governor, causing the cam plate to ride back down to its detent position. Cornering or deceleration during a transmission shift will cause a torque reversal of this type. The differential unit returns to its limited-slip function.

The self-energizing process would not occur if it were not for the action of one of the left clutch discs. This energizing disc provides the holding force of the ramping action to occur. It is the only disc which is splined to the cam plate itself. The other splined discs fit on the cam side gear.

If the rotating speed of the ring gear and differential case assembly is high enough, the latching bracket will pivot due to centrifugal force. This will move the flyweights so that no locking is permitted. During vehicle driving, this happens at approximately 32 km/h (20 mph) and continues at faster speeds.

When comparing the effectiveness of the locking differential, in terms of percent-of-grade capability to open and limited-slip units, the locking differential has nearly 3 times the potential of the limited-slip unit under the same conditions.

Locking Differential Torque-Limiting Disc

The locking differential design was modified in mid-1986 to include a load-limiting feature to reduce the chance of breaking an axle shaft under abusive driving conditions. The number of tangs on the energizing disc in the left-hand clutch pack was reduced allowing these tangs to shear in the event of a high-torque engagement of the differential locking mechanism.

At the time of failure of the load-limiting disc, there will be a loud bang in the rear axle and the differential will operate as a standard differential with some limited-slip action of the clutch packs at low torques.

The service procedure, when the disc tangs shear, involves replacing the left-hand clutch plates and the wave spring. It is also necessary to examine the axle shafts for twisting because at high torques it is possible to not only shear the load-limiting disc, but to also twist the axle shafts.

Transfer Case - NVG 149-NP3 (One Speed Automatic)

The NVG 149 RPO NP3 is a single speed, single mode transfer case. The mode is full-time all wheel drive. It has a planetary differential gear set that splits the torque, normally 38 percent to the front wheels and 62 percent to the rear wheels.

The NVG 149 utilizes magnesium housings. Proper fasteners, brackets, and fill/drain plugs must be used to prevent galvanic corrosion. The planetary differential uses the carrier as the input. The annulus gear connects to the rear output shaft and rear wheels. The sun gear connects to the front output shaft and front wheels through the chain and sprockets. The viscous coupling consists of a sealed housing filled with a high viscosity silicone fluid and thin steel plates alternately splined to the inner and outer drum. The inner drum is connected to the input shaft, and the outer drum to the sun gear. Whenever there is a speed difference between the front and rear wheels, the inner and outer plates of the viscous coupling spin relative to each other and the silicone fluid provides resistance. The resistance was tuned to be high enough to bias power quickly to the wheels with traction, and low enough to prevent binding in a tight turn on dry surfaces. This is the most common way the viscous coupling is activated, the shear mode. If the speed difference is high, the coupling can lock or hump. This "hump" occurs when the heat generated, expands the fluid inside the housing, changing the fluid dynamics between the plates. This results in pressure between the plates, forcing them into contact with each other, similar to a clutch pack. In the hump mode, the coupling can bias torque 100 percent to one axle, if required. Situations requiring this are extreme such as backing up a steep gravel grade or climbing over off-road obstacles. The viscous coupling is not serviceable; it must be replaced if defective. This is because each viscous coupling is calibrated for optimum vehicle performance for both the shear and hump modes. If the viscous coupling is in the "hump" mode too long, severe damage will occur. To prevent damage to the viscous coupling, DO NOT:

- Tow with only two wheels down
- Drive without one propshaft
- Drive with a "donut" spare tire for an extended period of time

Transfer Case - NVG 261-NP2 (Two Speed Manual)

The New Venture Gear (NVG) 261, RPO NP2 transfer case is a two-speed, part-time with "mode shift-on-the-fly" capability. It has a chain driven front output shaft and an epicyclical low range planetary arrangement. The NVG 261 transfer case features a four position shift lever control located in the vehicle floor plan. As required, the operator can select 4HI position from 2HI "on-the-fly," as described in the owners manual. A dash 4WD lamp will continue flashing during shifting, until all criteria have been met and the new mode/range position has been reached. Once the new mode/range position is fully engaged and the front axle disconnect locks in, the dash light 4WD indicator lamp will remain ON constantly. Range shifting functions similarly, although it should be limited to speeds 8 km/h (5 mph) or less.

The four manual mode, or range gear positions, of the NVG 261 transfer case are:

- 2HI - 2 wheel drive high range
- 4HI - 4 wheel drive high range, part-time
- 4LO - 4 wheel drive low range, 2.72:1 gear ratio reduction
- N - Neutral, 4 wheel

When the ignition switch is placed in the run position and the 4WD shift lever is in the 4WD position, the transfer case switch closes, supplying a ground to the axle actuator control circuit. With the ground applied, the logic of the front axle actuator actuates a DC motor to engage the front axle and supply voltage to the axle switch signal circuit. The axle switch signal circuit notifies the powertrain control module (PCM) and the Anti-Lock Brake System that the vehicle is in the 4WD mode. The 4WD indicator is commanded on via a Class 2 serial data signal from the PCM. When the 4WD shift lever is in the 4WD low range position, the transfer case switch closes and supplies a ground on the 4WD low signal circuit. This informs the PCM that the vehicle transfer case is in low range. When the vehicle is in low range, the PCM changes the shift pattern of the automatic transmission.

During normal driving situations, the transfer case can operate in the 2WD mode. The driver may choose to select any of the mode/range gear positions while driving the vehicle. However, the transfer case should not be shifted into or out of 4LO unless the following criteria have been met:

- The automatic transmission is in neutral or the clutch pedal is depressed.
- The vehicle speed is less than 3 mph (5 km/h).

This transfer case also has a neutral position. A shift to the neutral position allows the vehicle to be towed without rotating the transmission output shaft. In the neutral position, the rear propeller shaft will rotate the transfer case rear output shaft, in turn rotating the oil pump, providing constant lubrication during towing. Note, this neutral position is a 4WD neutral, meaning the front and rear outputs of the transfer case are engaged as though in 4HI. With a disconnecting front axle, there is no power flow to the front wheels, allowing towing with the front wheels off the ground or flat towing without driveline binding. Again, the transfer case should not be shifted into or out of neutral unless the following criteria have been met:

- The automatic transmission is in neutral or the clutch pedal is depressed.
- The vehicle speed is less than 3 mph (5 km/h).

The NVG 261 transfer case is available in 5 variations, depending on the engine and transmission configurations. The variations allow the transfer case to handle different torque loads. When servicing the transfer case it is important to understand which variation is being serviced because of the difference in parts.

There are some product improvement changes being released during the model year. The early production transfer case has a separate cup plug and a needle bearing in the input gear. The later production transfer case has a new input gear and uses a cup plug style bearing. The oil pump on the LD, HD1, and HD2 version is being changed to be the same as the SHD version. This oil pump change also includes a new rear output shaft. When servicing an early release model, only the later release parts will be available.

NVG 261 Variations

Model	Transmission	Input Gear	Output Shaft	Chain Size	Hi/Low Planetary	Application
Light Duty (LD)	M30 - 4L60E	27T Spline	32T Spline	3/8 X 1.25 in	4 Pinion	K1
Light Duty (LD)	MG5 - NV 3500	32T Spline	32T Spline	3/8 X 1.25 in	4 Pinion	K1
Heavy Duty 1 (HD1)	MT1 - 4L80E MW3 - NV 4500	32T Spline	32T Spline	3/8 X 1.5 in	6 Pinion	K2 Non Heavy Duty
Heavy Duty 2 (HD2)	MT1 - 4L80E MW3 - NV 4500	32T Spline	32T Spline	7/16 X 1.5 in	6 Pinion	K2 Heavy Duty
Super Heavy Duty (SHD)	ML6 - ZF S6-650 M74 - Allison	29T Spline	31T Spline	7/16 X 1.5 in	6 Pinion	K3

The HD2 and the SHD model share many of the same components but the increased torque capacity of the SHD requires a double row input bearing, larger diameter rear output shaft, rear output shaft bearing higher capacity, larger rear seal, case halves machined differently, and a different speed reluctor wheel.

Transfer Case - NVG 263-NP1 (Two Speed Selectable)

The NVG 263 transfer case features a three button shift control switch located on the instrument panel. When the vehicle has the ignition key in the RUN position, the transfer case shift control module starts monitoring the transfer case shift control switch to determine if the driver desires a new mode/gear position. At a single press of the transfer case shift control switch, the lamp of the new desired position will begin flashing to inform the driver that the transfer case shift control module has received the request for a new mode/gear position. The lamp will continue to flash until all shifting criteria has been met and the new mode/gear position has been reached (or has been engaged). Once the new mode/gear position is fully active, the switch indicator lamp for the new position will remain ON constantly.

The NVG 263 transfer case provides the driver with 3 manual mode/gear positions:

- 2HI - 2 Wheel Drive high range
- 4HI - 4 Wheel Drive high range
- 4LO - 4 Wheel Drive low range

The driver may choose to select any of these mode/gear positions while driving the vehicle. However, the transfer case will not allow a shift into or out of 4LO unless the following criteria has been met:

- The engine is running.
- The automatic transmission is in Neutral - clutch depressed on manual transmissions.
- The vehicle speed is below 3 MPH.

This transfer case also has a Neutral position. A shift to the Neutral position allows the vehicle to be towed without the rear axle rotating the transmission output shaft. Neutral position may be obtained only if the following criteria has been met:

- The engine is running.
- The automatic transmission is in Neutral (clutch depressed on manual transmissions).
- The vehicle speed is below 3 MPH.
- The transfer case is in 2HI mode.

Once these conditions have been met, press and hold both the 2HI and 4LO buttons for 10 seconds. When the system completes the shift to neutral, the red neutral lamp will illuminate.

View the list of major components that make up the automatic transfer case (ATC) system below.

Front Axle Actuator

The front axle actuator engages and disengages the front axle. The front axle actuator consists of a Permanent Magnetic (PM) motor, a worm gear controlled plunger, a front axle switch and an electronic control circuit. Whenever a shift to 4HI, or 4LO is requested, the transfer case shift control module

engages the front axle by grounding the axle actuator control circuit through a current limiting driver. The front axle actuator also sends a signal to the PCM indicating when the 4WD is engaged.

Transfer Case Shift Control Module

The transfer case shift control module uses the VIN information for calculations that are required for the different calibrations used based on axle ratio, transmission, tire size, and engine. The system does not know which calibration to use without this information. This information is provided to the transfer case shift control module via Class 2 data bus from the powertrain control module (PCM).

Transfer Case Encoder Motor

The transfer case encoder motor consists of a permanent magnet (PM) DC motor and gear reduction assembly. It is located on the left hand side (drivers side) of the transfer case. When activated it turns the sector shaft of the transfer case (clockwise or counter clockwise) to shift the transfer case. The encoder motor is controlled with a pulse width modulated (PWM) circuit within the transfer case shift control module. This circuit consists of a driver on both the Motor Control A and Motor Control B circuits. The encoder motor is bi-directional to allow the motor to shift the transfer case from 2HI or 4HI to NEUTRAL and 4LO positions.

Transfer Case Encoder

The encoder is mounted to the transfer case encoder motor assembly and is replaced only as an assembly. The encoder converts the sector shaft position (representing a mode or range) into electrical signal inputs to the transfer case shift control module. The module detects what position the transfer case is in by monitoring the 4 encoder channels (P, A, B, and C). These inputs translate into 2HI, 4HI, NEUTRAL, and 4LO or whether the motor is still in transition between gears.

The transfer case encoder channel circuits may be monitored using a scan tool.

Vehicle Speed Sensor

There is a vehicle speed sensor mounted to the transfer case on the rear output shaft. The speed sensor is a permanent magnet (PM) generator. The PM generator produces a AC voltage. The AC voltage level and number of pulses increases as speed increases. The VSS is an input to the powertrain control module (PCM). The PCM sends this information to the transfer case shift control module via the Class 2 serial data bus.

SERVICE Indicator (4WD) Lamp

The SERVICE indicator (4WD) lamp is an integral part of the cluster and cannot be serviced separately. This lamp is used to inform the driver of the vehicle of malfunctions within the automatic transfer case (ATC) system. The SERVICE indicator (4WD) lamp is controlled by the transfer case shift control module via a Class 2 message or by a Service Indicator Control circuit.

Transfer Case - NVG 246-NP8 (Two Speed Automatic)

The New Venture Gear model NVG 246 RPO NP8 transfer case is a two speed automatic, active, transfer case. The NVG 246 transfer case has many changes from prior years. The NVG 246 is now classified as an Electronic Architect Upgrade (EAU). The upgrades to the NVG 246 EAU include some of the following internal changes:

- A new encoder motor for faster operation in the AWD mode.
- The control actuator lever (3) is a new design with different cam angles.
- The shift detent plunger and spring is no longer used.
- The clutch assembly (1) uses a new style return spring and clutch washer.
- A new rear output shaft (2) no longer uses a retaining ring by the oil pump.
- The range shift fork (4) is a newer design.

The NVG 246 EAU provides 5 modes, Auto 4WD, 4HI, 4LO, 2HI and Neutral. The Auto 4WD position allows the capability of an active transfer case, which provides the benefits of on-demand torque biasing wet clutch and easy vehicle tuning through software calibrations. The software calibrations allow more

features such as flexible adapt ready position and clutch preload torque levels. The technology allows for vehicle speed dependent clutch torque levels to enhance the performance of the system. For example, the system is calibrated to provide 0-5 ft lb of clutch torque during low speed, low engine torque operation, and predetermined higher torque for 40 km/h (25 mph) and greater. This prevents crow-hop and binding at low speeds and provides higher torque biases at higher vehicle speeds, in order to enhance stability.

The NVG 246 EAU transfer case features a 4 button shift control switch located on the instrument panel. When the ignition key is in the RUN position, the transfer case shift control module monitors the transfer case shift control switch to determine if the driver desires a new mode/range position. At a single press of the transfer case shift control switch, the lamp of the new desired position will begin flashing to inform the driver that the transfer case shift control module has received the request for a new mode/range position. The lamp will continue to flash until all shifting criteria has been met and the new mode/range position has been reached, or has been engaged. Once the new mode/range position is fully active, the switch indicator lamp for the new position will remain ON constantly.

During normal driving situations, the transfer case can operate in the Auto 4WD mode. In the Auto 4WD mode, the transfer case shift control module monitors rear wheel slip speed, based on the inputs from both the front and rear propshaft speed sensors. When the vehicle experiences a rear wheel slip condition, the transfer case shift control module sends a pulse width modulated (PWM) signal to an electronic motor, which is the transfer case encoder motor. This motor rotates the transfer case control actuator lever shaft, applying a clutch pack. This clutch pack is designed to deliver a variable amount of torque, normally delivered to the rear wheels, and transfers it to the front wheels. Torque is ramped up to the front wheels until the front propshaft speed sensor matches that of the rear propshaft speed sensor. Torque is ramped down to the front wheels. The process would repeat if rear wheel slip is detected again.

The NVG 246 EAU transfer case has the added feature of also providing the driver with 3 manual mode/range positions:

- 4HI - 4 Wheel Drive high range
- 2HI - 2 Wheel Drive high range
- 4LO - 4 Wheel Drive low range

The driver may choose to select any of these mode/range positions while driving the vehicle. However, the transfer case will not allow a shift into or out of 4LO unless the following criteria has been met:

- The engine is running.
- The automatic transmission is in Neutral.
- The vehicle speed is below 5 km/h (3 mph).

This transfer case also has a Neutral position. A shift to the Neutral position allows the vehicle to be towed without rotating the transmission output shaft. Neutral position may be obtained only if the following criteria has been met:

- The engine is running.
- The automatic transmission is in Neutral.
- The vehicle speed is below 5 km/h (3 mph).
- The transfer case is in 2HI mode.

Once these conditions have been met, press and hold both the 2HI and 4LO buttons for 10 seconds. When the system completes the shift to neutral, the red neutral lamp will illuminate.

The NVG 246 EAU case halves are high-pressure die-cast magnesium. Ball bearings support the input shaft, the front output shaft, and the rear output shaft. A thrust bearing is located inside of the input shaft gear to support the front of the rear output shaft. The transfer case requires Auto Trac® II Fluid GM P/N 12378508 (Canadian P/N 10953626) which is blue in color. The fluid is designed for smooth clutch application. An oil pump, driven by the rear output shaft, pumps the fluid through the rear output shaft oil gallery to the clutch and bearings.

There are two versions of the NVG 246 EAU, which depend on the transmission applications and vehicle applications. If the vehicle is equipped with a transmission RPO M30, the transmission splines in the input gear will have 27 teeth. With this application the planetary carrier assembly will have 4 pinion gears. If the

vehicle is equipped with transmission RPO MT1 or MN8, the transmission splines in the input gear will have 32 teeth. The planetary carrier assembly on this application will have 6 pinion gears.

Braking System Description and Operation

Hydraulic Brake System Description and Operation

System Component Description

The hydraulic brake system consists of the following:

Hydraulic Brake Master Cylinder Fluid Reservoir

Contains supply of brake fluid for the hydraulic brake system.

Hydraulic Brake Master Cylinder

Converts mechanical input force into hydraulic output pressure.

Hydraulic output pressure is distributed from the master cylinder through two hydraulic circuits, supplying diagonally-opposed wheel apply circuits.

Hydraulic Brake Pressure Balance Control System

Regulates brake fluid pressure delivered to hydraulic brake wheel circuits, in order to control the distribution of braking force.

Pressure balance control is achieved through dynamic rear proportioning (DRP), which is a function of the ABS modulator.

Hydraulic Brake Pipes and Flexible Brake Hoses

Carries brake fluid to and from hydraulic brake system components.

Hydraulic Brake Wheel Apply Components

Converts hydraulic input pressure into mechanical output force.

System Operation

Mechanical force is converted into hydraulic pressure by the master cylinder, regulated to meet braking system demands by the pressure balance control system, and delivered to the hydraulic brake wheel circuits by the pipes and flexible hoses. The wheel apply components then convert the hydraulic pressure back into mechanical force which presses linings against rotating brake system components.

Brake Assist System Description and Operation

System Component Description

The brake assist system consists of the following:

Brake Pedal

Receives, multiplies and transfers brake system input force from driver.

Brake Pedal Pushrod

Transfers multiplied input force received from brake pedal to brake booster.

Vacuum Brake Booster

Uses source vacuum to decrease effort required by driver when applying brake system input force.

When brake system input force is applied, air at atmospheric pressure is admitted to the rear of both vacuum diaphragms, providing a decrease in brake pedal effort required. When input force is removed, vacuum replaces atmospheric pressure within the booster.

Vacuum Source

Supplies force used by vacuum brake booster to decrease brake pedal effort.

Vacuum Source Delivery System

Enables delivery and retention of source vacuum for vacuum brake booster.

System Operation

Brake system input force is multiplied by the brake pedal and transferred by the pedal pushrod to the hydraulic brake master cylinder. Effort required to apply the brake system is reduced by the vacuum brake booster.

Disc Brake System Description and Operation

System Component Description

The disc brake system consists of the following components:

Disc Brake Pads

Applies mechanical output force from the hydraulic brake calipers to friction surfaces of brake rotors.

Disc Brake Rotors

Uses mechanical output force applied to friction surfaces from the disc brake pads to slow speed of tire and wheel assembly rotation.

Disc Brake Pad Hardware

Secures disc brake pads firmly in proper relationship to the hydraulic brake calipers. Enables a sliding motion of brake pads when mechanical output force is applied.

Disc Brake Caliper Hardware

Provides mounting for hydraulic brake caliper and secures the caliper firmly in proper relationship to caliper bracket. Enables a sliding motion of the brake caliper to the brake pads when mechanical output force is applied.

System Operation

Mechanical output force is applied from the hydraulic brake caliper pistons to the inner brake pads. As the pistons press the inner brake pads outward, the caliper housings draw the outer brake pads inward. This allows the output force to be equally distributed. The brake pads apply the output force to the friction surfaces on both sides of the brake rotors, which slows the rotation of the tire and wheel assemblies. The correct function of both the brake pad and brake caliper hardware is essential for even distribution of braking force.

Drum Brake System Description and Operation

System Component Description

The drum brake system consists of the following:

Drum Brake Shoes

Applies mechanical output force (from hydraulic brake wheel cylinders) to friction surface of brake drums.

Brake Drums

Uses mechanical output force applied to friction surface from drum brake shoes to slow speed of tire and wheel assembly rotation.

Drum Brake Hardware

Secures drum brake shoes firmly in proper relationship to hydraulic brake wheel cylinders. Enables sliding motion of brake shoes needed to expand toward friction surface of drums when mechanical output force is applied; provides return of brake shoes when mechanical output force is relieved.

Drum Brake Adjusting Hardware

Provides automatic adjustment of brake shoes to brake drum friction surface whenever brake apply occurs during rearward motion of the vehicle.

System Operation

Mechanical output force is applied from the hydraulic brake wheel cylinder pistons to the top of the drum brake shoes. The output force is then distributed between the primary and secondary brake shoes as the shoes expand toward the friction surface of the brake drums. The brake shoes apply the output force to the friction surface of the brake drums, which slows the rotation of the tire and wheel assemblies. The proper function of both the drum brake hardware and adjusting hardware is essential to the proper distribution of braking force.

Park Brake System Description and Operation w/Rear Disc

General Description

The park brake system consists of the following:

Park Brake Pedal Assembly

Receives and transfers park brake system apply input force from driver to park brake cable system.

Park Brake Release Handle Assembly

Releases applied park brake system when pulled.

Park Brake Cables

Transfers input force received from park brake pedal, through park brake cable equalizer, to park brake apply lever.

Park Brake Cable Equalizer

Evenly distributes input force to both the left and right park brake units.

Threaded park brake cable equalizers are also used to remove slack in park brake cables.

Park Brake Apply Lever

Multiplies and transfers input force to park brake actuator.

Park Brake Actuator/Adjuster

Uses multiplied input force from apply lever to expand park brake shoe toward the friction surface of the drum-in-hat portion of the rear brake rotor.

Threaded park brake actuators are also used to control clearance between the park brake shoe and the friction surface of the drum-in-hat portion of the rear brake rotor.

Park Brake Shoe

Applies mechanical output force from park brake actuator to friction surface of the drum-in-hat portion of the rear brake rotor.

System Operation

Park brake apply input force is received by the park brake pedal assembly being depressed, transferred and evenly distributed, through the park brake cables and the park brake cable equalizer, to the left and right park brake apply levers. The park brake apply levers multiply and transfer the apply input force to the park brake actuators which expand the park brake shoe toward the friction surface of the drum-in-hat

portion of the rear brake rotor in order to prevent the rotation of the rear tire and wheel assemblies. The park brake release handle assembly releases an applied park brake system when it is pulled rearward.

Park Brake System Description and Operation (w/Rear Drum)

System Component Description

The park brake system consists of the following:

Park Brake Pedal Assembly:

Receives and transfers park brake system apply input force from driver to park brake cable system.

Park Brake Release Handle Assembly:

Releases applied park brake system when pulled.

Park Brake Cables:

Transfers input force received from park brake pedal, through park brake cable equalizer, to park brake apply lever.

Park Brake Cable Equalizer:

Evenly distributes input force to both the left and right park brake units.

Park Brake Apply Lever:

Multiplies and transfers input force to park brake actuator/adjuster.

System Operation

Depressing the Park Brake Pedal creates INPUT FORCE. The INPUT FORCE is transferred and evenly distributed through the park park cables and the equalizer to the left and right rear park brake cables. The INPUT FORCE, is then transferred to the apply levers located in each of the rear brake drums. The levers then multiply the INPUT FORCE and transfer the force to the rear brake shoes. At that point, the brake shoes are forced to expand and make contact with the friction surface of the rear brake drums, preventing the rotation of the rear wheels. Use the park brake release handle to disengage the park brake.

ABS Description and Operation

Antilock Brake System

When wheel slip is detected during a brake application, the ABS enters antilock mode. During antilock braking, hydraulic pressure in the individual wheel circuits is controlled to prevent any wheel from slipping. A separate hydraulic line and specific solenoid valves are provided for each wheel. The ABS can decrease, hold, or increase hydraulic pressure to each wheel brake. The ABS cannot, however, increase hydraulic pressure above the amount which is transmitted by the master cylinder during braking.

During antilock braking, a series of rapid pulsations is felt in the brake pedal. These pulsations are caused by the rapid changes in position of the individual solenoid valves as the EBCM responds to wheel speed sensor inputs and attempts to prevent wheel slip. These pedal pulsations are present only during antilock braking and stop when normal braking is resumed or when the vehicle comes to a stop. A ticking or popping noise may also be heard as the solenoid valves cycle rapidly. During antilock braking on dry pavement, intermittent chirping noises may be heard as the tires approach slipping. These noises and pedal pulsations are considered normal during antilock operation.

Vehicles equipped with ABS may be stopped by applying normal force to the brake pedal. Brake pedal operation during normal braking is no different than that of previous non-ABS systems. Maintaining a constant force on the brake pedal provides the shortest stopping distance while maintaining vehicle stability.

Engine Description and Operation

Engine Mechanical – 4.3L

General Specifications

Application	Specification	
	Metric	English
General		
• Engine Type	90 degree V6	
• Displacement	4.3 L	262 CID
• RPO	LU3	
• VIN	X	
• Bore	101.60 mm	4.012 in
• Stroke	88.39 mm	3.480 in
• Compression Ratio	9.2:1	
• Firing Order	1-6-5-4-3-2	
• Spark Plug Gap	1.52 mm	0.060 in
Balance Shaft		
• Bearing Journal Diameter - Rear	38.085-38.100 mm	1.4994-1.500 in
• Bushing Bore Diameter - Rear	0.050-0.088 mm	0.0020-0.0035 in
Block		
• Crankshaft Main Bearing Bore Out-of-Round	0.050 mm	0.002 in
• Cylinder Bore Diameter	101.618-101.643 mm	4.0007-4.0017 in
• Cylinder Bore Out-of-Round - Production	0.017 mm	0.0007 in
• Cylinder Bore Out-of-Round - Service	0.05 mm	0.002 in
• Cylinder Bore Taper - Production Relief Side	0.025 mm	0.0010 in
• Cylinder Bore Taper - Production Thrust Side	0.012 mm	0.0005 in
• Cylinder Bore Taper - Service	0.025 mm	0.0010 in
• Cylinder Head Deck Surface Flatness	0.050-0.152 mm	0.002-0.006 in
Camshaft		
• Camshaft End Play	0.0254-0.2286 mm	0.0010-0.0090 in
• Camshaft Journal Diameter	47.440-47.490 mm	1.8677-1.8696 in
• Camshaft Journal Out-of-Round	0.025 mm	0.001 in
• Camshaft Lobe Lift - Exhaust	7.20-7.30 mm	0.283-0.287 in
• Camshaft Lobe Lift - Intake	6.97-7.07 mm	0.274-0.278 in
• Camshaft Runout	0.065 mm	0.0026 in
Connecting Rod		
• Connecting Rod Bearing Clearance - Production	0.038-0.078 mm	0.0015-0.0031 in
• Connecting Rod Bearing Clearance - Service	0.025-0.063 mm	0.0010-0.0025 in
• Connecting Rod Side Clearance	0.15-0.44 mm	0.006-0.017 in
Crankshaft		
• Connecting Rod Journal Diameter	57.116-57.148 mm	2.2487-2.2497 in
• Connecting Rod Journal Out-of-Round - Production	0.008 mm	0.0003 in
• Connecting Rod Journal Out-of-Round - Service	0.025 mm	0.0010 in
• Connecting Rod Journal Taper - Production	0.010 mm	0.0004 in
• Connecting Rod Journal Taper - Service	0.025 mm	0.0010 in
• Crankshaft End Play	0.050-0.20 mm	0.002-0.008 in
• Crankshaft Main Bearing Clearance #1 - Production	0.02-0.05 mm	0.0008-0.0020 in

Application	Specification	
	Metric	English
• Crankshaft Main Bearing Clearance #2, #3, and #4 - Production	0.028-0.058 mm	0.0011-0.0023 in
• Crankshaft Main Bearing Clearance #1 - Service	0.0254-0.05 mm	0.0010-0.0020 in
• Crankshaft Main Bearing Clearance #2, #3, and #4 - Service	0.025-0.063 mm	0.0010-0.0025 in
• Crankshaft Main Journal Diameter #1	62.199-62.217 mm	2.4488-2.4495 in
• Crankshaft Main Journal Diameter #2 and #3	62.191-62.215 mm	2.4485-2.4494 in
• Crankshaft Main Journal Diameter #4	62.179-62.203 mm	2.4480-2.4489 in
• Crankshaft Main Journal Out-of-Round - Production	0.005 mm	0.0002 in
• Crankshaft Main Journal Out-of-Round - Service	0.025 mm	0.0010 in
• Crankshaft Main Journal Taper	0.007 mm	0.0003 in
Exhaust Manifold		
• Surface Flatness - Flange to Flange	0.25 mm	0.010 in
• Surface Flatness - Individual Flange	0.05 mm	0.002 in
Intake Manifold		
• Surface Flatness	0.10 mm	0.004 in
Lubrication System		
• Oil Capacity for C/K, G/H with Filter	4.3 L	4.5 qt
• Oil Capacity for C/K, G/H without Filter	3.8 L	4 qt
• Oil Capacity for S/T, M/L with Filter	4.7 L	5 qt
• Oil Capacity for S/T, M/L without Filter	4.3 L	4.5 qt
• Oil Pressure - at 1,000 RPM	42 kPa	6 psi
• Oil Pressure - at 2,000 RPM	125 kPa	18 psi
• Oil Pressure - at 4,000 RPM	166 kPa	24 psi
Piston Rings		
• Piston Ring End Gap - First Compression Ring - Production	0.25-0.40 mm	0.010-0.016 in
• Piston Ring End Gap - Second Compression Ring - Production	0.38-0.58 mm	0.015-0.023 in
• Piston Ring End Gap - Oil Control Ring - Production	0.25-0.76 mm	0.010-0.029 in
• Piston Ring End Gap - First Compression Ring - Service	0.25-0.50 mm	0.010-0.020 in
• Piston Ring End Gap - Second Compression Ring - Service	0.38-0.80 mm	0.015-0.031 in
• Piston Ring End Gap - Oil Control Ring - Service	0.005-0.090 mm	0.0002-0.0035 in
• Piston Ring to Groove Clearance - First Compression Ring - Production	0.030-0.070 mm	0.0012-0.0027 in
• Piston Ring to Groove Clearance - Second Compression Ring - Production	0.076-0.280 mm	0.0030-0.0110 in
• Piston Ring to Groove Clearance - Oil Control Ring - Production	0.046-0.196 mm	0.0018-0.0077 in
• Piston Ring to Groove Clearance - First Compression Ring - Service	0.030-0.085 mm	0.0012-0.0033 in
• Piston Ring to Groove Clearance - Second Compression Ring - Service	0.030-0.085 mm	0.0012-0.0033 in
• Piston Ring to Groove Clearance - Oil Control Ring - Service	0.076-0.200 mm	0.0030-0.0079 in

Application	Specification	
	Metric	English
Pistons and Pins		
• Piston - Piston to Bore Clearance - Production	0.018-0.061 mm	0.0007-0.0024 in
• Piston - Piston to Bore Clearance - Service	0.075 mm	0.0029 in
• Pin - Piston Pin Clearance to Connecting Rod Bore - Press Fit	0.012-0.048 mm	0.0005-0.0019 in
• Pin - Piston Pin Clearance to Piston Pin Bore - Production	0.013-0.023 mm	0.0005-0.0009 in
• Pin - Piston Pin Clearance to Piston Pin Bore - Service	0.025 mm	0.0010 in
• Pin - Piston Pin Diameter	23.545-23.548 mm	0.9270-0.9271 in
Valve System		
• Valves - Valve Face Angle	45 degrees	
• Valves - Valve Seat Angle	46 degrees	
• Valves - Valve Seat Runout	0.05 mm	0.002 in
• Valves - Valve Seat Width - Intake	1.016-1.651 mm	0.040-0.065 in
• Valves - Valve Seat Width - Exhaust	1.651-2.489 mm	0.065-0.098 in
• Valves - Valve Stem Oil Seal Installed Height	1-2 mm	0.03937-0.07874 in
• Valves - Valve Stem-to-Guide Clearance - Intake - Production	0.025-0.069 mm	0.0010-0.0027 in
• Valves - Valve Stem-to-Guide Clearance - Intake - Service	0.025-0.094 mm	0.0010-0.0037 in
• Valves - Valve Stem-to-Guide Clearance - Exhaust - Production	0.025-0.069 mm	0.0010-0.0027 in
• Valves - Valve Stem-to-Guide Clearance - Exhaust - Service	0.025-0.094 mm	0.0010-0.0037 in
• Rocker Arms - Valve Rocker Arm Ratio	1.5:1	
• Valve Springs - Valve Spring Free Length	51.3 mm	2.02 in
• Valve Springs - Valve Spring Installed Height - Intake	42.92-43.43 mm	1.670-1.700 in
• Valve Springs - Valve Spring Installed Height - Exhaust	42.92-43.43 mm	1.670-1.700 in
• Valve Springs - Valve Spring Load - Closed	338-374 N @ 43.2 mm	76-84 lb @ 1.70 in
• Valve Springs - Valve Spring Load - Open	832-903 N @ 32.3 mm	187-203 lb @ 1.27 in

Fastener Tightening Specifications

Application	Specification	
	Metric	English
Accelerator Control Cable Bracket Nut to Stud	12 N·m	106 lb in
Accelerator Control Cable Bracket Nut to Throttle Body	9 N·m	80 lb in
Accelerator Control Cable Bracket Stud to Intake Manifold	6 N·m	53 lb in
Accelerator Control Cable Bracket Stud to Throttle Body	12 N·m	106 lb in
Air Cleaner Adapter Stud	8 N·m	71 lb in
Balance Shaft Driven Gear Bolt		
• First Pass	20 N·m	15 lb ft
• Final Pass	35 degrees	
Balance Shaft Retainer Bolt	12 N·m	106 lb in
Battery Cable Bracket Bolt to Oil Pan	12 N·m	106 lb in
Battery Negative Cable Bolt to Engine	25 N·m	18 lb ft
Battery Positive Cable Junction Block Bracket Bolt	25 N·m	18 lb ft
Belt Idler Pulley Bolt	50 N·m	37 lb ft
Camshaft Retainer Bolt	12 N·m	106 lb in

Application	Specification	
	Metric	English
Camshaft Sprocket Bolt	25 N·m	18 lb ft
Connecting Rod Nut		
• First Pass	27 N·m	20 lb ft
• Final Pass	70 degrees	
Crankshaft Balancer Bolt	95 N·m	70 lb ft
Crankshaft Bearing Cap Bolt - Preferred Method		
• First Pass	20 N·m	15 lb ft
• Final Pass	73 degrees	
Crankshaft Bearing Cap Bolt	105 N·m	77 lb ft
Crankshaft Position Sensor Bolt	9 N·m	80 lb in
Crankshaft Pulley Bolt	58 N·m	43 lb ft
Crankshaft Rear Oil Seal Housing Bolt and Nut	12 N·m	106 lb in
Crankshaft Rear Oil Seal Housing Retainer Stud	6 N·m	53 lb in
Crossmember Bolt	100 N·m	74 lb ft
Cylinder Head Bolt - Preferred Method		
• All Bolts First Pass in Sequence	30 N·m	22 lb ft
• Long Bolts Final Pass in Sequence	75 degrees	
• Medium Bolts Final Pass in Sequence	65 degrees	
• Short Bolts Final Pass in Sequence	55 degrees	
Cylinder Head Core Hole Plug	20 N·m	15 lb ft
Distributor Cap Bolt	2.4 N·m	21 lb in
Distributor Clamp Bolt	25 N·m	18 lb ft
Drive Belt Idler Pulley Bolt	50 N·m	37 lb ft
Drive Belt Tensioner Bolt	50 N·m	37 lb ft
Engine Block Left Side Oil Gallery Plug	20 N·m	15 lb ft
Engine Block Left Rear Oil Gallery Plug	30 N·m	22 lb ft
Engine Block Right Rear Oil Gallery Plug	20 N·m	15 lb ft
Engine Block Coolant Drain Hole Plug	20 N·m	15 lb ft
Engine Block Oil Gallery Plug	20 N·m	15 lb ft
Engine Coolant Heater Bolt/Screw	2 N·m	18 lb in
Engine Coolant Temperature (ECT) Sensor	20 N·m	15 lb ft
Engine Flywheel Bolt	100 N·m	74 lb ft
Engine Front Cover Bolt	12 N·m	106 lb in
Engine Lift Front Bracket Stud	35 N·m	26 lb ft
Engine Mount Bolt to Engine Bracket	50 N·m	37 lb ft
Engine Mount Engine Bracket Bolt to Engine	50 N·m	37 lb ft
Engine Mount Frame Bracket Through-bolt	75 N·m	55 lb ft
Engine Mount Frame Side Mount Bolt	65 N·m	50 lb ft
Engine Oil Level Sensor	13 N·m	115 lb in
Engine Oil Pressure Gage Sensor	30 N·m	22 lb ft
Engine Oil Pressure Gage Sensor Fitting - Plus Required Angle	15 N·m	11 lb ft
Engine Shield Bolt	20 N·m	15 lb ft
Engine Wiring Harness Bracket Bolt to Battery Positive Cable Junction Block Bracket	9 N·m	80 lb in
Engine Wiring Harness Bracket Bolt to Generator and Drive Belt Tensioner Bracket	25 N·m	18 lb ft
Engine Wiring Harness Bracket Nut to Evaporative Emission (EVAP) Canister Purge Solenoid Valve Stud	9 N·m	80 lb in
Engine Wiring Harness Bracket Nut to Intake Manifold Stud	12 N·m	106 lb in
Engine Wiring Harness Bracket Stud	25 N·m	18 lb ft
Engine Wiring Harness Clip Bolt	9 N·m	80 lb in

Application	Specification	
	Metric	English
Engine Wiring Harness Ground Nut	16 N·m	12 lb ft
Evaporative Emission (EVAP) Canister Purge Solenoid Valve Stud to Intake Manifold	10 N·m	89 lb in
Exhaust Manifold Bolt/Stud		
• First Pass	15 N·m	11 lb ft
• Final Pass	30 N·m	22 lb ft
Exhaust Manifold Heat Shield Bolt	9 N·m	80 lb in
Fan and Water Pump Pulley Bolt	25 N·m	18 lb ft
Frame Cross Bar Bolt	100 N·m	74 lb ft
Fuel Meter Body Bracket Bolt	10 N·m	89 lb in
Fuel Pipe Bracket Bolt	6 N·m	53 lb in
Fuel Pipe Retainer Nut	3 N·m	27 lb in
Fuel Supply Pipe Nut - Fuel Tank Side	30 N·m	22 lb ft
Generator and Drive Belt Tensioner Bracket Bolt to Engine	41 N·m	30 lb ft
Generator and Drive Belt Tensioner Bracket Stud to Engine	20 N·m	15 lb ft
Generator and Drive Belt Tensioner Bracket Stud Nut	41 N·m	30 lb ft
Ground Wire Bolt to Rear of Left Side Cylinder Head	16 N·m	12 lb ft
Ground Wire Nut to Rear of Right Side Cylinder Head	16 N·m	12 lb ft
Heater Hose Bracket Bolt to Generator and Drive Belt Tensioner Bracket	25 N·m	18 lb ft
Hood Hinge Bolt	25 N·m	18 lb ft
Ignition Coil Stud	12 N·m	106 lb in
Junction Block Bracket Bolt	25 N·m	18 lb ft
Knock Sensor	25 N·m	18 lb ft
Lift Bracket Bolts	15 N·m	11 lb ft
Lower Intake Manifold Bolt		
• First Pass in Sequence	3 N·m	27 lb in
• Second Pass in Sequence	12 N·m	106 lb in
• Final Pass in Sequence	15 N·m	11 lb ft
Oil Cooler Pipe Bracket to Oil Pan Bolt	12 N·m	106 lb in
Oil Filter	30 N·m	22 lb ft
Oil Filter Adapter	55 N·m	41 lb ft
Oil Filter Fitting	55 N·m	41 lb ft
Oil Level Indicator Tube Bolt	12 N·m	106 lb in
Oil Pan Baffle Bolt	12 N·m	106 lb in
Oil Pan Bolt and Nut	25 N·m	18 lb ft
Oil Pan Drain Plug	25 N·m	18 lb ft
Oil Pan Skid Plate Bolt	20 N·m	15 lb ft
Oil Pump Bolt to Rear Crankshaft Bearing Cap	90 N·m	66 lb ft
Oil Pump Cover Bolt	12 N·m	106 lb in
Positive Battery Cable Clip Bolt	9 N·m	80 lb in
Positive Cable Generator Nut	18 N·m	13 lb ft
Power Steering Pump Bracket Bolt to Engine	41 N·m	30 lb ft
Power Steering Pump Bracket Stud to Engine	20 N·m	15 lb ft
Power Steering Pump Bracket Stud Nut	41 N·m	30 lb ft
Power Steering Pump Bolt	50 N·m	37 lb ft
Power Steering Pump Nut to Engine - Rear Bracket to Engine	41 N·m	30 lb ft
Power Steering Pump Rear Bracket Nut	50 N·m	37 lb ft
Secondary Air Injection (AIR) Check Valve Pipe Bracket Bolt to Exhaust Manifold	10 N·m	89 lb in
Secondary Air Injection (AIR) Check Valve Pipe Stud Nut	25 N·m	18 lb ft

Application	Specification	
	Metric	English
Spark Plug		
• Initial Installation - NEW Cylinder Head	30 N·m	22 lb ft
• All Subsequent Installations	15 N·m	11 lb ft
Spark Plug Wire Support Bolt	12 N·m	106 lb in
Starter Motor Wiring Harness/Transmission Cooler Pipe Bracket to Oil Pan Bolt	9 N·m	80 lb in
Throttle Body Stud	9 N·m	80 lb in
Torque Converter Bolt	63 N·m	47 lb ft
Transmission Bolt	50 N·m	37 lb ft
Transmission Cover Bolt	12 N·m	106 lb in
Transmission Oil Cooler Line Bracket	9 N·m	80 lb in
Transmission to Oil Pan Bolt	47 N·m	35 lb ft
Upper Intake Manifold Stud		
• First Pass	5 N·m	44 lb in
• Final Pass	9 N·m	80 lb in
Valve Lifter Pushrod Guide Bolt	16 N·m	12 lb ft
Valve Rocker Arm Bolt	30 N·m	22 lb ft
Valve Rocker Arm Cover Bolt	12 N·m	106 lb in
Water Outlet Stud	25 N·m	18 lb ft
Water Pump Bolt	45 N·m	33 lb ft

Engine Component Description

Balance Shaft

The cast iron balance shaft is mounted in the crankcase above and in-line with the camshaft. A camshaft gear drives the gear attached to the balance shaft. The front end of the balance shaft is supported by a ball-type bearing. The rear end of the balance shaft uses a sleeve-type bearing.

Camshaft

The steel camshaft is supported by four bearings pressed into the engine block. The camshaft timing chain sprocket mounted to the front of the camshaft is driven by the crankshaft sprocket through a camshaft timing chain.

Crankshaft

The cast nodular iron crankshaft is supported by four crankshaft bearings. The number four crankshaft bearing at the rear of the engine is the end thrust bearing. The crankshaft bearings are retained by bearing caps that are machined with the engine block for proper alignment and clearances. The crankshaft position sensor reluctor ring has three lugs used for crankshaft timing and is constructed of powdered metal. The crankshaft position sensor reluctor ring has a slight interference fit onto the crankshaft and an internal keyway for correct positioning.

Cylinder Heads

The cast iron cylinder heads have one intake and one exhaust valve for each cylinder. A spark plug is located between the valves in the side of the cylinder head. The valve guides and seats are integral to the cylinder head. The 4.3L heavy duty applications have pressed in exhaust valve seats. The valve rocker arms are positioned on the valve rocker arm supports and retained by a bolt.

Engine Block

The cast iron engine block has six cylinders arranged in a V shape with three cylinders in each bank. Starting at the front side of the engine block, the cylinders in the left bank are numbered 1-3-5 and cylinders in the right bank are numbered 2-4-6 (when viewed from the rear). The firing order of the cylinders is 1-6-5-4-3-2. The cylinders are encircled by coolant jackets.

Exhaust Manifolds

The cast iron exhaust manifolds direct exhaust gases from the combustion chambers to the exhaust system.

Intake Manifold

The intake manifold is a two-piece design. The upper portion is made from a composite material and the lower portion is cast aluminum. The throttle body attaches to the upper manifold. The Central Multipoint Flexible Injection system uses multiple fuel injectors to meter and distribute fuel to each engine cylinder. The Central (MFI) is retained by a bracket bolted to the lower intake manifold. The fuel meter body also houses the pressure regulator. Metal inlet and outlet fuel lines and nylon delivery tubes connect to the Central (MFI) unit. The delivery tubes independently distribute fuel to each cylinder through injectors located at the port entrance of each manifold runner where the fuel is atomized.

Piston and Connecting Rod Assemblies

The cast aluminum pistons use two compression rings and one oil control assembly. The piston is a low friction, lightweight design with a flat top and barrel shaped skirt. The piston pins are offset 0.9 mm (0.0354 in) toward the major thrust side (right side) to reduce piston slap as the connecting rod travels from one side of the piston to the other side after a stroke. The piston pins have a floating fit in the piston and are retained by a press fit in the connecting rod. The connecting rods are forged steel. The connecting rods are machined with the rod cap installed for proper clearances and alignments.

Valve Train

Motion is transmitted from the camshaft through the hydraulic roller valve lifters and the tubular valve pushrods to the roller type valve rocker arms. The roller type valve rocker arm pivots on a needle type bearing in order to open the valve. The valve rocker arms for each bank of cylinders are mounted to a one piece valve rocker arm support. Each valve rocker arm is retained on the valve rocker arm support and the cylinder head by a bolt. The hydraulic valve lifters keep all the parts of the valve train in constant contact. Each hydraulic valve lifter acts as an automatic adjuster and maintains zero lash in the valve train. This eliminates the need for periodic valve adjustment.

Crankcase Ventilation System Description

A crankcase ventilation system is used in order to provide a more complete scavenging of crankcase vapors. The air cleaner supplies fresh air through a filter to the crankcase. The crankcase mixes the fresh air with blow-by gases. This mixture then passes through a crankcase ventilation valve into the intake manifold.

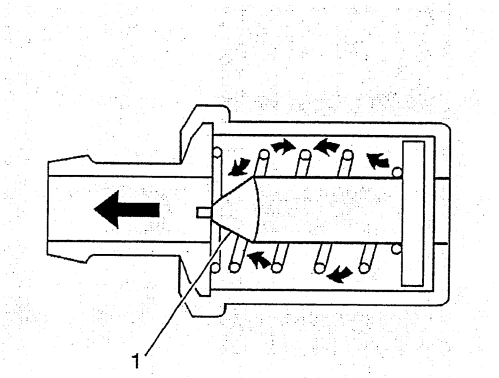

The primary control is through the crankcase ventilation valve (1), which meters the flow at a rate depending on the manifold vacuum.

In order to maintain an idle quality, the crankcase ventilation valve restricts the flow when the intake manifold vacuum is high. If abnormal operating conditions arise, the system is designed in order to allow the excessive amounts of blow-by gases to back flow through the crankcase vent tube into the air cleaner in order to be consumed by normal combustion.

Drive Belt System Description

The drive belt system consists of the following components:

- The drive belt
- The drive belt tensioner
- The drive belt idler pulley
- The crankshaft balancer pulley

- The accessory drive component mounting brackets
- The accessory drive components
  - The power steering pump, if belt driven
  - The generator
  - The A/C compressor, if equipped
  - The engine cooling fan, if belt driven
  - The water pump, if belt driven
  - The vacuum pump, if equipped
  - The air compressor, if equipped

The drive belt system may use one belt or two belts. The drive belt is thin so that it can bend backwards and has several ribs to match the grooves in the pulleys. There also may be a V-belt style belt used to drive certain accessory drive components. The drive belts are made of different types of rubbers (chloroprene or EPDM) and have different layers or plys containing either fiber cloth or cords for reinforcement.

Both sides of the drive belt may be used to drive the different accessory drive components. When the back side of the drive belt is used to drive a pulley, the pulley is smooth.

The drive belt is pulled by the crankshaft balancer pulley across the accessory drive component pulleys. The spring loaded drive belt tensioner keeps constant tension on the drive belt to prevent the drive belt from slipping. The drive belt tensioner arm will move when loads are applied to the drive belt by the accessory drive components and the crankshaft.

The drive belt system may have an idler pulley, which is used to add wrap to the adjacent pulleys. Some systems use an idler pulley in place of an accessory drive component when the vehicle is not equipped with the accessory.

Lubrication Description

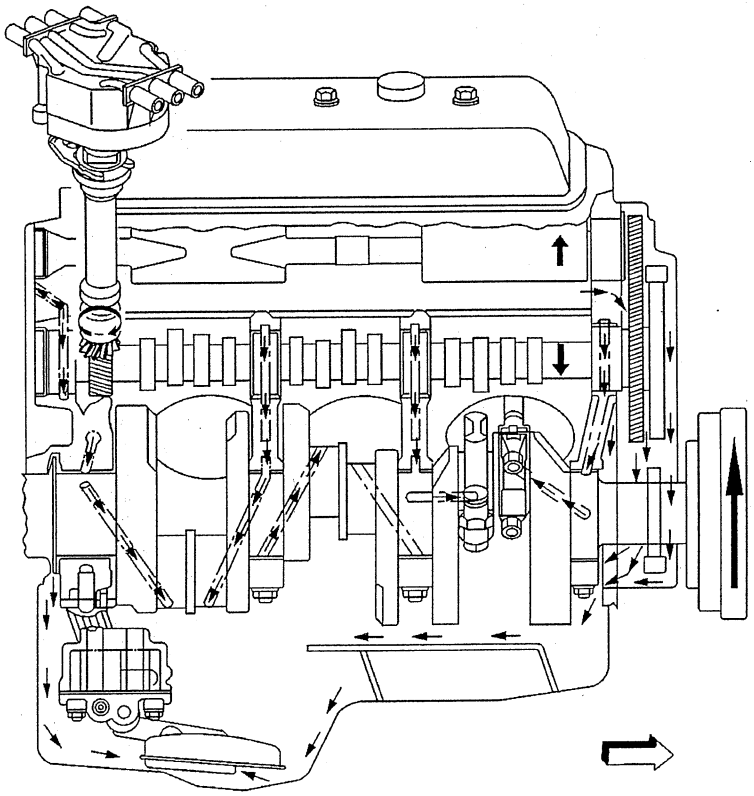

2007 Chevrolet Silverado Classic Truck Restoration Kit

Full pressure lubrication, through a full-flow oil filter is supplied by a gear-type oil pump. Oil is drawn up through the oil pump screen and passes through the pump to the oil filter. The oil filter is a full-flow paper element unit with an anti-drain back valve. An oil filter bypass valve is used to ensure adequate oil supply, in the event the filter becomes plugged or develops excessive pressure drop. Filtered oil flows into the main gallery and then to the camshaft, the balance shaft, the rear bearing, and the crankshaft bearings. The valve lifter oil gallery supplies oil to the valve lifters. Oil flows from the valve lifters through the hollow valve pushrods to the valve rocker arms. Oil drains back to the crankcase through the oil drain holes in the cylinder head. The camshaft timing chain is drip fed from the front camshaft bearing. The pistons and piston pins are lubricated by oil splash.

Engine Mechanical – 4.8, 5.3, 6.0L

General Specifications 4.8L (LR4 VIN V)

Application	Specification	
	Metric	English
General		
• Bore	96.0-96.018 mm	3.779-3.78 in
• Compression Ratio	9.5:1	
• Displacement	4.8L	293 CID
• Engine Type	V8	
• Firing Order	1-8-7-2-6-5-4-3	
• RPO	LR4	
• Stroke	83.0 mm	3.268 in
• VIN	V	
• Spark Plug Gap	1.02 mm	0.04 in
Block		
• Camshaft Bearing Bore 1 and 5 Diameter	59.62-59.67 mm	2.347-2.349 in
• Camshaft Bearing Bore 2 and 4 Diameter	59.12-59.17 mm	2.327-2.329 in
• Camshaft Bearing Bore 3 Diameter	58.62-58.67 mm	2.307-2.309 in
• Crankshaft Main Bearing Bore Diameter	69.871-69.889 mm	2.75-2.751 in
• Crankshaft Main Bearing Bore Out-of-Round	0.006 mm	0.0002 in
• Cylinder Bore Diameter	96.0-96.018 mm	3.779-3.78 in
• Cylinder Head Deck Height - Measuring from the Centerline of Crankshaft to the Deck Face	234.57-234.82 mm	9.235-9.245 in
• Cylinder Head Deck Surface Flatness - Measured within a 152.4 mm (6.0 in) Area	0.11 mm	0.004 in
• Cylinder Head Deck Surface Flatness - Measuring the Overall Length of the Block Deck	0.22 mm	0.008 in
• Valve Lifter Bore Diameter	21.417-21.443 mm	0.843-0.844 in
Camshaft		
• Camshaft End Play	0.025-0.305 mm	0.001-0.012 in
• Camshaft Journal Diameter	54.99-55.04 mm	2.164-2.166 in
• Camshaft Journal Out-of-Round	0.025 mm	0.001 in
• Camshaft Lobe Lift - Exhaust	6.96 mm	0.274 in
• Camshaft Lobe Lift - Intake	6.82 mm	0.268 in
• Camshaft Runout - Measured at the Intermediate Journals	0.05 mm	0.002 in
Connecting Rod		
• Connecting Rod Bearing Clearance - Production	0.023-0.065 mm	0.0009-0.0025 in
• Connecting Rod Bearing Clearance - Service	0.023-0.076 mm	0.0009-0.003 in
• Connecting Rod Bore Diameter - Bearing End	56.505-56.525 mm	2.224-2.225 in
• Connecting Rod Bore Out-of-Round - Bearing End - Production	0.004-0.008 mm	0.00015-0.0003 in
• Connecting Rod Bore Out-of-Round - Bearing End - Service	0.004-0.008 mm	0.00015-0.0003 in
• Connecting Rod Side Clearance	0.11-0.51 mm	0.00433-0.02 in

Application	Specification	
	Metric	English
Crankshaft		
• Connecting Rod Journal Diameter - Production	53.318-53.338 mm	2.0991-2.0999 in
• Connecting Rod Journal Diameter - Service	53.308 mm	2.0987 in
• Connecting Rod Journal Out-of-Round - Production	0.005 mm	0.0002 in
• Connecting Rod Journal Out-of-Round - Service	0.01 mm	0.0004 in
• Connecting Rod Journal Taper - Maximum for 1/2 of Journal Length - Production	0.005 mm	0.0002 in
• Connecting Rod Journal Taper - Maximum for 1/2 of Journal Length - Service	0.02 mm	0.00078 in
• Crankshaft End Play	0.04-0.2 mm	0.0015-0.0078 in
• Crankshaft Main Bearing Clearance - Production	0.02-0.052 mm	0.0008-0.0021 in
• Crankshaft Main Bearing Clearance - Service	0.02-0.065 mm	0.0008-0.0025 in
• Crankshaft Main Journal Diameter - Production	64.992-65.008 mm	2.558-2.559 in
• Crankshaft Main Journal Diameter - Service	64.992 mm	2.558 in
• Crankshaft Main Journal Out-of-Round - Production	0.003 mm	0.000118 in
• Crankshaft Main Journal Out-of-Round - Service	0.008 mm	0.0003 in
• Crankshaft Main Journal Taper - Production	0.01 mm	0.0004 in
• Crankshaft Main Journal Taper - Service	0.02 mm	0.00078 in
• Crankshaft Rear Flange Runout	0.05 mm	0.002 in
• Crankshaft Reluctor Ring Runout - Measured 1.0 mm (0.04 in) Below Tooth Diameter	0.7 mm	0.028 in
• Crankshaft Thrust Surface - Production	26.14-26.22 mm	1.029-1.0315 in
• Crankshaft Thrust Surface - Service	26.22 mm	1.0315 in
• Crankshaft Thrust Surface Runout	0.025 mm	0.001 in
Cylinder Head		
• Cylinder Head Height/Thickness - Measured from the Cylinder Head Deck to the Valve Rocker Arm Cover Seal Surface	120.2 mm	4.732 in
• Surface Flatness - Block Deck - Measured within a 152.4 mm (6.0 in) Area	0.08 mm	0.003 in
• Surface Flatness - Block Deck - Measuring the Overall Length of the Cylinder Head	0.1 mm	0.004 in
• Surface Flatness - Exhaust Manifold Deck	0.13 mm	0.005 in
• Surface Flatness - Intake Manifold Deck	0.08 mm	0.0031 in
• Valve Guide Installed Height - Measured from the Spring Seat Surface to the Top of the Guide	17.32 mm	0.682 in
Intake Manifold		
• Surface Flatness - Measured at Gasket Sealing Surfaces and Measured within a 200 mm (7.87 in) Area that Includes 2 Runner Port Openings	0.3 mm	0.118 in

Application	Specification	
	Metric	English
Lubrication System		
• Oil Capacity - with Filter	5.68 liters	6.0 quarts
• Oil Capacity - without Filter	4.73 liters	5.0 quarts
• Oil Pressure - Minimum - Hot	41 kPa at 1,000 engine RPM 124 kPa at 2,000 engine RPM 165 kPa at 4,000 engine RPM	6 psig at 1,000 engine RPM 18 psig at 2,000 engine RPM 24 psig at 4,000 engine RPM
Oil Pan		
• Front Cover Alignment - at Oil Pan Surface	0.0-0.5 mm	0.0-0.02 in
• Rear Housing Alignment - at Oil Pan Surface	0.0-0.5 mm	0.0-0.02 in
• Oil Pan Alignment - to Rear of Engine Block at Transmission Bell Housing Mounting Surface	0.0-0.1 mm	0.0-0.004 in
Piston Rings		
• Piston Ring End Gap - First Compression Ring - Measured in Cylinder Bore - Production	0.23-0.44 mm	0.009-0.017 in
• Piston Ring End Gap - First Compression Ring - Measured in Cylinder Bore - Service	0.23-0.5 mm	0.009-0.0196 in
• Piston Ring End Gap - Second Compression Ring - Measured in Cylinder Bore - Production	0.44-0.7 mm	0.017-0.027 in
• Piston Ring End Gap - Second Compression Ring - Measured in Cylinder Bore - Service	0.44-0.76 mm	0.0173-0.03 in
• Piston Ring End Gap - Oil Control Ring - Measured in Cylinder Bore - Production	0.18-0.75 mm	0.007-0.029 in
• Piston Ring End Gap - Oil Control Ring - Measured in Cylinder Bore - Service	0.18-0.81 mm	0.007-0.032 in
• Piston Ring to Groove Clearance - First Compression Ring - Production	0.04-0.085 mm	0.00157-0.00335 in
• Piston Ring to Groove Clearance - First Compression Ring - Service	0.04-0.085 mm	0.00157-0.00335 in
• Piston Ring to Groove Clearance - Second Compression Ring - Production	0.04-0.078 mm	0.00157-0.0031 in
• Piston Ring to Groove Clearance - Second Compression Ring - Service	0.04-0.078 mm	0.00157-0.0031 in
• Piston Ring to Groove Clearance - Oil Control Ring - Production	0.012-0.2 mm	0.0005-0.0078 in
• Piston Ring to Groove Clearance - Oil Control Ring - Service	0.012-0.2 mm	0.0005-0.0078 in
Pistons and Pins		
• Pin - Piston Pin Clearance to Piston Pin Bore - Production	0.002-0.01 mm	0.00008-0.0004 in
• Pin - Piston Pin Clearance to Piston Pin Bore - Service	0.002-0.015 mm	0.00008-0.0006 in
• Pin - Piston Pin Diameter	23.952-23.955 mm	0.943-0.943 in
• Pin - Piston Pin Fit in Connecting Rod Bore - Production	0.007-0.02 mm	0.00027-0.00078 in

Application	Specification	
	Metric	English
• Pin - Piston Pin Fit in Connecting Rod Bore - Service	0.007-0.022 mm	0.00027-0.00086 in
• Piston - Piston Diameter - Measured Over Skirt Coating	96.002-96.036 mm	3.779-3.78 in
• Piston - Piston to Bore Clearance - Production	-0.036 to +0.016 mm	-0.0014 to +0.0006 in
• Piston - Piston to Bore Clearance - Service Limit with Skirt Coating Worn Off	0.071 mm	0.0028 in
Valve System		
• Valves - Valve Face Angle	45 degrees	
• Valves - Valve Face Width	1.25 mm	0.05 in
• Valves - Valve Lash	Net Lash - No Adjustment	
• Valves - Valve Lift - Exhaust	11.82 mm	0.465 in
• Valves - Valve Lift - Intake	11.58 mm	0.456 in
• Valves - Valve Seat Angle	46 degrees	
• Valves - Valve Seat Runout	0.05 mm	0.002 in
• Valves - Valve Seat Width - Exhaust	1.78 mm	0.07 in
• Valves - Seat Width - Intake	1.02 mm	0.04 in
• Valves - Valve Stem Diameter - Production	7.955-7.976 mm	0.313-0.314 in
• Valves - Valve Stem Diameter - Service	7.95 mm	0.313 in
• Valves - Stem-to-Guide Clearance - Production - Intake	0.025-0.066 mm	0.001-0.0026 in
• Valves - Stem-to-Guide Clearance - Service - Intake	0.093 mm	0.0037 in
• Valves - Stem-to-Guide Clearance - Production - Exhaust	0.025-0.066 mm	0.001-0.0026 in
• Valves - Stem-to-Guide Clearance - Service - Exhaust	0.093 mm	0.0037 in
• Rocker Arms - Valve Rocker Arm Ratio	1.70:1	
• Valve Springs - Valve Spring Free Length	52.9 mm	2.08 in
• Valve Springs - Installed Height	45.75 mm	1.8 in
• Valve Springs - Valve Spring Load - Closed	340 N at 45.75 mm	76 lb at 1.8 in
• Valve Springs - Valve Spring Load - Open	980 N at 33.55 mm	220 lb at 1.32 in

General Specifications 5.3L (LM7 VIN T)

Application	Specification	
	Metric	English
General		
• Engine Type	V8	
• Displacement	5.3L	325 CID
• RPO	LM7	
• VIN	T	
• Bore	96.0-96.018 mm	3.779-3.78 in
• Stroke	92.0 mm	3.622 in
• Compression Ratio	9.5:1	
• Firing Order	1-8-7-2-6-5-4-3	
• Spark Plug Gap	1.02 mm	0.04 in
Block		
• Camshaft Bearing Bore 1 and 5 Diameter	59.62-59.67 mm	2.347-2.349 in
• Camshaft Bearing Bore 2 and 4 Diameter	59.12-59.17 mm	2.327-2.329 in
• Camshaft Bearing Bore 3 Diameter	58.62-58.67 mm	2.307-2.309 in
• Crankshaft Main Bearing Bore Diameter	69.871-69.889 mm	2.75-2.751 in
• Crankshaft Main Bearing Bore Out-of-Round	0.006 mm	0.0002 in
• Cylinder Bore Diameter	96.0-96.018 mm	3.779-3.78 in
• Cylinder Head Deck Height - Measuring from the Centerline of Crankshaft to the Deck Face	234.57-234.82 mm	9.235-9.245 in
• Cylinder Head Deck Surface Flatness - Measured within a 152.4 mm (6.0 in) Area	0.11 mm	0.004 in
• Cylinder Head Deck Surface Flatness - Measuring the Overall Length of the Block Deck	0.22 mm	0.008 in
• Valve Lifter Bore Diameter	21.417-21.443 mm	0.843-0.844 in
Camshaft		
• Camshaft End Play	0.025-0.305 mm	0.001-0.012 in
• Camshaft Journal Diameter	54.99-55.04 mm	2.164-2.166 in
• Camshaft Journal Out-of-Round	0.025 mm	0.001 in
• Camshaft Lobe Lift - Exhaust	6.96 mm	0.274 in
• Camshaft Lobe Lift - Intake	6.82 mm	0.268 in
• Camshaft Runout - Measured at the Intermediate Journals	0.05 mm	0.002 in
Connecting Rod		
• Connecting Rod Bearing Clearance - Production	0.023-0.065 mm	0.0009-0.0025 in
• Connecting Rod Bearing Clearance - Service	0.023-0.076 mm	0.0009-0.003 in
• Connecting Rod Bore Diameter - Bearing End	56.505-56.525 mm	2.224-2.225 in
• Connecting Rod Bore Out-of-Round - Bearing End - Production	0.004-0.008 mm	0.00015-0.0003 in
• Connecting Rod Bore Out-of-Round - Bearing End - Service	0.004-0.008 mm	0.00015-0.0003 in
• Connecting Rod Side Clearance	0.11-0.51 mm	0.00433-0.02 in

Application	Specification	
	Metric	English
Crankshaft		
• Connecting Rod Journal Diameter - Production	53.318-53.338 mm	2.0991-2.0999 in
• Connecting Rod Journal Diameter - Service	53.308 mm	2.0987 in
• Connecting Rod Journal Out-of-Round - Production	0.005 mm	0.0002 in
• Connecting Rod Journal Out-of-Round - Service	0.01 mm	0.0004 in
• Connecting Rod Journal Taper - Maximum for 1/2 of Journal Length - Production	0.005 mm	0.0002 in
• Connecting Rod Journal Taper - Maximum for 1/2 of Journal Length - Service	0.02 mm	0.00078 in
• Crankshaft End Play	0.04-0.2 mm	0.0015-0.0078 in
• Crankshaft Main Bearing Clearance - Production	0.02-0.052 mm	0.0008-0.0021 in
• Crankshaft Main Bearing Clearance - Service	0.02-0.065 mm	0.0008-0.0025 in
• Crankshaft Main Journal Diameter - Production	64.992-65.008 mm	2.558-2.559 in
• Crankshaft Main Journal Diameter - Service	64.992 mm	2.558 in
• Crankshaft Main Journal Out-of-Round - Production	0.003 mm	0.000118 in
• Crankshaft Main Journal Out-of-Round - Service	0.008 mm	0.0003 in
• Crankshaft Main Journal Taper - Production	0.01 mm	0.0004 in
• Crankshaft Main Journal Taper - Service	0.02 mm	0.00078 in
• Crankshaft Rear Flange Runout	0.05 mm	0.002 in
• Crankshaft Reluctor Ring Runout - Measured 1.0 mm (0.04 in) Below Tooth Diameter	0.7 mm	0.028 in
• Crankshaft Thrust Surface - Production	26.14-26.22 mm	1.029-1.0315 in
• Crankshaft Thrust Surface - Service	26.22 mm	1.0315 in
• Crankshaft Thrust Surface Runout	0.025 mm	0.001 in
Cylinder Head		
• Cylinder Head Height/Thickness - Measured from the Cylinder Head Deck to the Valve Rocker Arm Cover Seal Surface	120.2 mm	4.732 in
• Surface Flatness - Block Deck - Measured within a 152.4 mm (6.0 in) Area	0.08 mm	0.003 in
• Surface Flatness - Block Deck - Measuring the Overall Length of the Cylinder Head	0.1 mm	0.004 in
• Surface Flatness - Exhaust Manifold Deck	0.13 mm	0.005 in
• Surface Flatness - Intake Manifold Deck	0.08 mm	0.0031 in
• Valve Guide Installed Height - Measured from the Spring Seat Surface to the Top of the Guide	17.32 mm	0.682 in
Intake Manifold		
• Surface Flatness - Measured at Gasket Sealing Surfaces and Measured within a 200 mm (7.87 in) Area that Includes 2 Runner Port Openings	0.3 mm	0.118 in

Application	Specification	
	Metric	English
Lubrication System		
• Oil Capacity - with Filter	5.68 liters	6.0 quarts
• Oil Capacity - without Filter	4.73 liters	5.0 quarts
• Oil Pressure - Minimum - Hot	41 kPa at 1,000 engine RPM 124 kPa at 2,000 engine RPM 165 kPa at 4,000 engine RPM	6 psig at 1,000 engine RPM 18 psig at 2,000 engine RPM 24 psig at 4,000 engine RPM
Oil Pan		
• Front Cover Alignment - at Oil Pan Surface	0.0-0.5 mm	0.0-0.02 in
• Rear Housing Alignment - at Oil Pan Surface	0.0-0.5 mm	0.0-0.02 in
• Oil Pan Alignment - to Rear of Engine Block at Transmission Bell Housing Mounting Surface	0.0-0.1 mm	0.0-0.004 in
Piston Rings		
• Piston Ring End Gap - First Compression Ring - Measured in Cylinder Bore - Production	0.23-0.44 mm	0.009-0.017 in
• Piston Ring End Gap - First Compression Ring - Measured in Cylinder Bore - Service	0.23-0.5 mm	0.009-0.0196 in
• Piston Ring End Gap - Second Compression Ring - Measured in Cylinder Bore - Production	0.44-0.7 mm	0.017-0.027 in
• Piston Ring End Gap - Second Compression Ring - Measured in Cylinder Bore - Service	0.44-0.76 mm	0.0173-0.03 in
• Piston Ring End Gap - Oil Control Ring - Measured in Cylinder Bore - Production	0.18-0.75 mm	0.007-0.029 in
• Piston Ring End Gap - Oil Control Ring - Measured in Cylinder Bore - Service	0.18-0.81 mm	0.007-0.032 in
• Piston Ring to Groove Clearance - First Compression Ring - Production	0.04-0.085 mm	0.00157-0.00335 in
• Piston Ring to Groove Clearance - First Compression Ring - Service	0.04-0.085 mm	0.00157-0.00335 in
• Piston Ring to Groove Clearance - Second Compression Ring - Production	0.04-0.078 mm	0.00157-0.0031 in
• Piston Ring to Groove Clearance - Second Compression Ring - Service	0.04-0.078 mm	0.00157-0.0031 in
• Piston Ring to Groove Clearance - Oil Control Ring - Production	0.012-0.2 mm	0.0005-0.0078 in
• Piston Ring to Groove Clearance - Oil Control Ring - Service	0.012-0.2 mm	0.0005-0.0078 in
Pistons and Pins		
• Pin - Piston Pin Clearance to Piston Pin Bore - Production	0.002-0.01 mm	0.00008-0.0004 in
• Pin - Piston Pin Clearance to Piston Pin Bore - Service	0.002-0.015 mm	0.00008-0.0006 in
• Pin - Piston Pin Diameter	23.952-23.955 mm	0.943-0.943 in
• Pin - Piston Pin Fit in Connecting Rod Bore - Production	0.007-0.02 mm	0.00027-0.00078 in

Application	Specification	
	Metric	English
• Pin - Piston Pin Fit in Connecting Rod Bore - Service	0.007-0.022 mm	0.00027-0.00086 in
• Piston - Piston Diameter - Measured Over Skirt Coating	96.002-96.036 mm	3.779-3.78 in
• Piston - Piston to Bore Clearance - Production	-0.036 to +0.016 mm	-0.0014 to +0.0006 in
• Piston - Piston to Bore Clearance - Service Limit with Skirt Coating Worn Off	0.071 mm	0.0028 in
Valve System		
• Valves - Valve Face Angle	45 degrees	
• Valves - Valve Face Width	1.25 mm	0.05 in
• Valves - Valve Lash	Net Lash - No Adjustment	
• Valves - Valve Lift - Exhaust	11.82 mm	0.465 in
• Valves - Valve Lift - Intake	11.58 mm	0.456 in
• Valves - Valve Seat Angle	46 degrees	
• Valves - Valve Seat Runout	0.05 mm	0.002 in
• Valves - Valve Seat Width - Exhaust	1.78 mm	0.07 in
• Valves - Seat Width - Intake	1.02 mm	0.04 in
• Valves - Valve Stem Diameter - Production	7.955-7.976 mm	0.313-0.314 in
• Valves - Valve Stem Diameter - Service	7.95 mm	0.313 in
• Valves - Valve Stem-to-Guide Clearance - Production - Intake	0.025-0.066 mm	0.001-0.0026 in
• Valves - Valve Stem-to-Guide Clearance - Service - Intake	0.093 mm	0.0037 in
• Valves - Valve Stem-to-Guide Clearance - Production - Exhaust	0.025-0.066 mm	0.001-0.0026 in
• Valves - Valve Stem-to-Guide Clearance - Service - Exhaust	0.093 mm	0.0037 in
• Rocker Arms - Valve Rocker Arm Ratio	1.70:1	
• Valve Springs - Valve Spring Free Length	52.9 mm	2.08 in
• Valve Springs - Valve Spring Installed Height	45.75 mm	1.8 in
• Valve Springs - Valve Spring Load - Closed	340 N at 45.75 mm	76 lb at 1.8 in
• Valve Springs - Valve Spring Load - Open	980 N at 33.55 mm	220 lb at 1.32 in

General Specifications 5.3L (L59 VIN Z)

Application	Specification	
	Metric	English
General		
• Engine Type	V8	
• Displacement	5.3L	325 CID
• RPO	L59	
• VIN	Z	
• Bore	96.0-96.018 mm	3.779-3.78 in
• Stroke	92.0 mm	3.622 in
• Compression Ratio	9.5:1	
• Firing Order	1-8-7-2-6-5-4-3	
• Spark Plug Gap	1.02 mm	0.04 in
Block		
• Camshaft Bearing Bore 1 and 5 Diameter	59.62-59.67 mm	2.347-2.349 in
• Camshaft Bearing Bore 2 and 4 Diameter	59.12-59.17 mm	2.327-2.329 in
• Camshaft Bearing Bore 3 Diameter	58.62-58.67 mm	2.307-2.309 in
• Crankshaft Main Bearing Bore Diameter	69.871-69.889 mm	2.75-2.751 in
• Crankshaft Main Bearing Bore Out-of-Round	0.006 mm	0.0002 in
• Cylinder Bore Diameter	96.0-96.018 mm	3.779-3.78 in
• Cylinder Head Deck Height - Measuring from the Centerline of Crankshaft to the Deck Face	234.57-234.82 mm	9.235-9.245 in
• Cylinder Head Deck Surface Flatness - Measured Within a 152.4 mm (6.0 in) Area	0.11 mm	0.004 in
• Cylinder Head Deck Surface Flatness - Measuring the Overall Length of the Block Deck	0.22 mm	0.008 in
• Valve Lifter Bore Diameter	21.417-21.443 mm	0.843-0.844 in
Camshaft		
• Camshaft End Play	0.025-0.305 mm	0.001-0.012 in
• Camshaft Journal Diameter	54.99-55.04 mm	2.164-2.166 in
• Camshaft Journal Out-of-Round	0.025 mm	0.001 in
• Camshaft Lobe Lift - Exhaust	6.96 mm	0.274 in
• Camshaft Lobe Lift - Intake	6.82 mm	0.268 in
• Camshaft Runout - Measured at the Intermediate Journals	0.05 mm	0.002 in
Connecting Rod		
• Connecting Rod Bearing Clearance - Production	0.023-0.065 mm	0.0009-0.0025 in
• Connecting Rod Bearing Clearance - Service	0.023-0.076 mm	0.0009-0.003 in
• Connecting Rod Bore Diameter - Bearing End	56.505-56.525 mm	2.224-2.225 in
• Connecting Rod Bore Out-of-Round - Bearing End - Production	0.004-0.008 mm	0.00015-0.0003 in
• Connecting Rod Bore Out-of-Round - Bearing End - Service	0.004-0.008 mm	0.00015-0.0003 in
• Connecting Rod Side Clearance	0.11-0.51 mm	0.00433-0.02 in

Application	Specification	
	Metric	English
Crankshaft		
• Connecting Rod Journal Diameter - Production	53.318-53.338 mm	2.0991-2.0999 in
• Connecting Rod Journal Diameter - Service	53.308 mm	2.0987 in
• Connecting Rod Journal Out-of-Round - Production	0.005 mm	0.0002 in
• Connecting Rod Journal Out-of-Round - Service	0.01 mm	0.0004 in
• Connecting Rod Journal Taper - Maximum for 1/2 of Journal Length - Production	0.005 mm	0.0002 in
• Connecting Rod Journal Taper - Maximum for 1/2 of Journal Length - Service	0.02 mm	0.00078 in
• Crankshaft End Play	0.04-0.2 mm	0.0015-0.0078 in
• Crankshaft Main Bearing Clearance - Production	0.02-0.052 mm	0.0008-0.0021 in
• Crankshaft Main Bearing Clearance - Service	0.02-0.065 mm	0.0008-0.0025 in
• Crankshaft Main Journal Diameter - Production	64.992-65.008 mm	2.558-2.559 in
• Crankshaft Main Journal Diameter - Service	64.992 mm	2.558 in
• Crankshaft Main Journal Out-of-Round - Production	0.003 mm	0.000118 in
• Crankshaft Main Journal Out-of-Round - Service	0.008 mm	0.0003 in
• Crankshaft Main Journal Taper - Production	0.01 mm	0.0004 in
• Crankshaft Main Journal Taper - Service	0.02 mm	0.00078 in
• Crankshaft Rear Flange Runout	0.05 mm	0.002 in
• Crankshaft Reluctor Ring Runout - Measured 1.0 mm (0.04 in) Below Tooth Diameter	0.7 mm	0.028 in
• Crankshaft Thrust Surface - Production	26.14-26.22 mm	1.029-1.0315 in
• Crankshaft Thrust Surface - Service	26.22 mm	1.0315 in
• Crankshaft Thrust Surface Runout	0.025 mm	0.001 in
Cylinder Head		
• Cylinder Head Height/Thickness - Measured from the Cylinder Head Deck to the Valve Rocker Arm Cover Seal Surface	120.2 mm	4.732 in
• Surface Flatness - Block Deck - Measured Within a 152.4 mm (6.0 in) Area	0.08 mm	0.003 in
• Surface Flatness - Block Deck - Measuring the Overall Length of the Cylinder Head	0.1 mm	0.004 in
• Surface Flatness - Exhaust Manifold Deck	0.13 mm	0.005 in
• Surface Flatness - Intake Manifold Deck	0.08 mm	0.0031 in
• Valve Guide Installed Height - Measured from the Spring Seat Surface to the Top of the Guide	17.32 mm	0.682 in
Intake Manifold		
• Surface Flatness - Measured at Gasket Sealing Surfaces and Measured Within a 200 mm (7.87 in) Area that Includes 2 Runner Port Openings	0.3 mm	0.118 in

Application	Specification	
	Metric	English
Lubrication System		
• Oil Capacity - with Filter	5.68 liters	6.0 quarts
• Oil Capacity - without Filter	4.73 liters	5.0 quarts
• Oil Pressure - Minimum - Hot	41 kPa at 1,000 engine RPM 124 kPa at 2,000 engine RPM 165 kPa at 4,000 engine RPM	6 psig at 1,000 engine RPM 18 psig at 2,000 engine RPM 24 psig at 4,000 engine RPM
Oil Pan		
• Front Cover Alignment - at Oil Pan Surface	0.0-0.5 mm	0.0-0.02 in
• Rear Housing Alignment - at Oil Pan Surface	0.0-0.5 mm	0.0-0.02 in
• Oil Pan Alignment - to Rear of Engine Block at Transmission Bell Housing Mounting Surface	0.0-0.1 mm	0.0-0.004 in
Piston Rings		
• Piston Ring End Gap - First Compression Ring - Measured in Cylinder Bore - Production	0.23-0.44 mm	0.009-0.017 in
• Piston Ring End Gap - First Compression Ring - Measured in Cylinder Bore - Service	0.23-0.5 mm	0.009-0.0196 in
• Piston Ring End Gap - Second Compression Ring - Measured in Cylinder Bore - Production	0.44-0.7 mm	0.017-0.027 in
• Piston Ring End Gap - Second Compression Ring - Measured in Cylinder Bore - Service	0.44-0.76 mm	0.0173-0.03 in
• Piston Ring End Gap - Oil Control Ring - Measured in Cylinder Bore - Production	0.18-0.75 mm	0.007-0.029 in
• Piston Ring End Gap - Oil Control Ring - Measured in Cylinder Bore - Service	0.18-0.81 mm	0.007-0.032 in
• Piston Ring to Groove Clearance - First Compression Ring - Production	0.04-0.085 mm	0.00157-0.00335 in
• Piston Ring to Groove Clearance - First Compression Ring - Service	0.04-0.085 mm	0.00157-0.00335 in
• Piston Ring to Groove Clearance - Second Compression Ring - Production	0.04-0.078 mm	0.00157-0.0031 in
• Piston Ring to Groove Clearance - Second Compression Ring - Service	0.04-0.078 mm	0.00157-0.0031 in
• Piston Ring to Groove Clearance - Oil Control Ring - Production	0.012-0.2 mm	0.0005-0.0078 in
• Piston Ring to Groove Clearance - Oil Control Ring - Service	0.012-0.2 mm	0.0005-0.0078 in
Pistons and Pins		
• Pin - Piston Pin Clearance to Piston Pin Bore - Production	0.002-0.01 mm	0.00008-0.0004 in
• Pin - Piston Pin Clearance to Piston Pin Bore - Service	0.002-0.015 mm	0.00008-0.0006 in
• Pin - Piston Pin Diameter	23.952-23.955 mm	0.943-0.943 in
• Pin - Piston Pin Fit in Connecting Rod Bore - Production	0.007-0.02 mm	0.00027-0.00078 in

Application	Specification	
	Metric	English
• Pin - Piston Pin Fit in Connecting Rod Bore - Service	0.007-0.022 mm	0.00027-0.00086 in
• Piston - Piston Diameter - Measured Over Skirt Coating	96.002-96.036 mm	3.779-3.78 in
• Piston - Piston to Bore Clearance - Production	-0.036 to +0.016 mm	-0.0014 to +0.0006 in
• Piston - Piston to Bore Clearance - Service Limit with Skirt Coating Worn Off	0.071 mm	0.0028 in
Valve System		
• Valves - Valve Face Angle	45 degrees	
• Valves - Valve Face Width	1.25 mm	0.05 in
• Valves - Valve Lash	Net Lash - No Adjustment	
• Valves - Valve Lift - Intake	11.58 mm	0.456 in
• Valves - Valve Lift - Exhaust	11.82 mm	0.465 in
• Valves - Valve Seat Angle	46 degrees	
• Valves - Valve Seat Runout	0.05 mm	0.002 in
• Valves - Valve Seat Width - Exhaust	1.78 mm	0.07 in
• Valves - Seat Width - Intake	1.02 mm	0.04 in
• Valves - Valve Stem Diameter - Production	7.955-7.976 mm	0.313-0.314 in
• Valves - Valve Stem Diameter - Service	7.95 mm	0.313 in
• Valves - Valve Stem-to-Guide Clearance - Production - Intake	0.025-0.066 mm	0.001-0.0026 in
• Valves - Valve Stem-to-Guide Clearance - Service - Intake	0.093 mm	0.0037 in
• Valves - Valve Stem-to-Guide Clearance - Production - Exhaust	0.025-0.066 mm	0.001-0.0026 in
• Valves - Valve Stem-to-Guide Clearance - Service - Exhaust	0.093 mm	0.0037 in
• Rocker Arms - Valve Rocker Arm Ratio	1.70:1	
• Valve Springs - Valve Spring Free Length	52.9 mm	2.08 in
• Valve Springs - Valve Spring Installed Height	45.75 mm	1.8 in
• Valve Springs - Valve Spring Load - Closed	340 N at 45.75 mm	76 lb at 1.8 in
• Valve Springs - Valve Spring Load - Open	980 N at 33.55 mm	220 lb at 1.32 in

General Specifications 5.3L (L33 VIN B)

Application	Specification	
	Metric	English
General		
• Engine Type	V8	
• Displacement	5.3L	325 CID
• RPO	L33	
• VIN	B	
• Bore	96.0-96.018 mm	3.779-3.78 in
• Stroke	92.0 mm	3.622 in
• Compression Ratio	9.9:1	
• Firing Order	1-8-7-2-6-5-4-3	
• Spark Plug Gap	1.02 mm	0.04 in
Block		
• Camshaft Bearing Bore 1 and 5 Diameter	59.62-59.67 mm	2.347-2.349 in
• Camshaft Bearing Bore 2 and 4 Diameter	59.12-59.17 mm	2.327-2.329 in
• Camshaft Bearing Bore 3 Diameter	58.62-58.67 mm	2.307-2.309 in
• Crankshaft Main Bearing Bore Diameter	69.871-69.889 mm	2.75-2.751 in
• Crankshaft Main Bearing Bore Out-of-Round	0.006 mm	0.0002 in
• Cylinder Bore Diameter	96.0-96.018 mm	3.779-3.78 in
• Cylinder Head Deck Height - Measuring from the Centerline of Crankshaft to the Deck Face	234.57-234.82 mm	9.235-9.245 in
• Cylinder Head Deck Surface Flatness - Measured Within a 152.4 mm (6.0 in) Area	0.11 mm	0.004 in
• Cylinder Head Deck Surface Flatness - Measuring the Overall Length of the Block Deck	0.22 mm	0.008 in
• Valve Lifter Bore Diameter	21.417-21.443 mm	0.843-0.844 in
Camshaft		
• Camshaft End Play	0.025-0.305 mm	0.001-0.012 in
• Camshaft Journal Diameter	54.99-55.04 mm	2.164-2.166 in
• Camshaft Journal Out-of-Round	0.025 mm	0.001 in
• Camshaft Lobe Lift - Exhaust	7.2 mm	0.283 in
• Camshaft Lobe Lift - Intake	7.2 mm	0.283 in
• Camshaft Runout - Measured at the Intermediate Journals	0.05 mm	0.002 in
Connecting Rod		
• Connecting Rod Bearing Clearance - Production	0.023-0.065 mm	0.0009-0.0025 in
• Connecting Rod Bearing Clearance - Service	0.023-0.076 mm	0.0009-0.003 in
• Connecting Rod Bore Diameter - Bearing End	56.505-56.525 mm	2.224-2.225 in
• Connecting Rod Bore Out-of-Round - Bearing End - Production	0.004-0.008 mm	0.00015-0.0003 in
• Connecting Rod Bore Out-of-Round - Bearing End - Service	0.004-0.008 mm	0.00015-0.0003 in
• Connecting Rod Side Clearance	0.11-0.51 mm	0.00433-0.02 in

Application	Specification	
	Metric	English
Crankshaft		
• Connecting Rod Journal Diameter - Production	53.318-53.338 mm	2.0991-2.0999 in
• Connecting Rod Journal Diameter - Service	53.308 mm	2.0987 in
• Connecting Rod Journal Out-of-Round - Production	0.005 mm	0.0002 in
• Connecting Rod Journal Out-of-Round - Service	0.01 mm	0.0004 in
• Connecting Rod Journal Taper - Maximum for 1/2 of Journal Length - Production	0.005 mm	0.0002 in
• Connecting Rod Journal Taper - Maximum for 1/2 of Journal Length - Service	0.02 mm	0.00078 in
• Crankshaft End Play	0.04-0.2 mm	0.0015-0.0078 in
• Crankshaft Main Bearing Clearance - Production	0.02-0.052 mm	0.0008-0.0021 in
• Crankshaft Main Bearing Clearance - Service	0.02-0.065 mm	0.0008-0.0025 in
• Crankshaft Main Journal Diameter - Production	64.992-65.008 mm	2.558-2.559 in
• Crankshaft Main Journal Diameter - Service	64.992 mm	2.558 in
• Crankshaft Main Journal Out-of-Round - Production	0.003 mm	0.000118 in
• Crankshaft Main Journal Out-of-Round - Service	0.008 mm	0.0003 in
• Crankshaft Main Journal Taper - Production	0.01 mm	0.0004 in
• Crankshaft Main Journal Taper - Service	0.02 mm	0.00078 in
• Crankshaft Rear Flange Runout	0.05 mm	0.002 in
• Crankshaft Reluctor Ring Runout - Measured 1.0 mm (0.04 in) Below Tooth Diameter	0.7 mm	0.028 in
• Crankshaft Thrust Surface - Production	26.14-26.22 mm	1.029-1.0315 in
• Crankshaft Thrust Surface - Service	26.22 mm	1.0315 in
• Crankshaft Thrust Surface Runout	0.025 mm	0.001 in
Cylinder Head		
• Cylinder Head Height/Thickness - Measured from the Cylinder Head Deck to the Valve Rocker Arm Cover Seal Surface	120.2 mm	4.732 in
• Surface Flatness - Block Deck - Measured Within a 152.4 mm (6.0 in) Area	0.08 mm	0.003 in
• Surface Flatness - Block Deck - Measuring the Overall Length of the Cylinder Head	0.1 mm	0.004 in
• Surface Flatness - Exhaust Manifold Deck	0.13 mm	0.005 in
• Surface Flatness - Intake Manifold Deck	0.08 mm	0.0031 in
• Valve Guide Installed Height - Measured from the Spring Seat Surface to the Top of the Guide	17.32 mm	0.682 in
Intake Manifold		
• Surface Flatness - Measured at Gasket Sealing Surfaces and Measured Within a 200 mm (7.87 in) Area that Includes 2 Runner Port Openings	0.3 mm	0.118 in

Application	Specification	
	Metric	English
Lubrication System		
• Oil Capacity - with Filter	5.68 liters	6.0 quarts
• Oil Capacity - without Filter	4.73 liters	5.0 quarts
• Oil Pressure - Minimum - Hot	41 kPa at 1,000 engine RPM 124 kPa at 2,000 engine RPM 165 kPa at 4,000 engine RPM	6 psig at 1,000 engine RPM 18 psig at 2,000 engine RPM 24 psig at 4,000 engine RPM
Oil Pan		
• Front Cover Alignment - at Oil Pan Surface	0.0-0.5 mm	0.0-0.02 in
• Rear Housing Alignment - at Oil Pan Surface	0.0-0.5 mm	0.0-0.02 in
• Oil Pan Alignment - to Rear of Engine Block at Transmission Bell Housing Mounting Surface	0.0-0.1 mm	0.0-0.004 in
Piston Rings		
• Piston Ring End Gap - First Compression Ring - Measured in Cylinder Bore - Production	0.23-0.44 mm	0.009-0.017 in
• Piston Ring End Gap - First Compression Ring - Measured in Cylinder Bore - Service	0.23-0.5 mm	0.009-0.0196 in
• Piston Ring End Gap - Second Compression Ring - Measured in Cylinder Bore - Production	0.44-0.7 mm	0.017-0.027 in
• Piston Ring End Gap - Second Compression Ring - Measured in Cylinder Bore - Service	0.44-0.76 mm	0.0173-0.03 in
• Piston Ring End Gap - Oil Control Ring - Measured in Cylinder Bore - Production	0.18-0.75 mm	0.007-0.029 in
• Piston Ring End Gap - Oil Control Ring - Measured in Cylinder Bore - Service	0.18-0.81 mm	0.007-0.032 in
• Piston Ring to Groove Clearance - First Compression Ring - Production	0.04-0.085 mm	0.00157-0.00335 in
• Piston Ring to Groove Clearance - First Compression Ring - Service	0.04-0.085 mm	0.00157-0.00335 in
• Piston Ring to Groove Clearance - Second Compression Ring - Production	0.04-0.078 mm	0.00157-0.0031 in
• Piston Ring to Groove Clearance - Second Compression Ring - Service	0.04-0.078 mm	0.00157-0.0031 in
• Piston Ring to Groove Clearance - Oil Control Ring - Production	0.012-0.2 mm	0.0005-0.0078 in
• Piston Ring to Groove Clearance - Oil Control Ring - Service	0.012-0.2 mm	0.0005-0.0078 in
Pistons and Pins		
• Pin - Piston Pin Clearance to Piston Pin Bore - Production	0.002-0.01 mm	0.00008-0.0004 in
• Pin - Piston Pin Clearance to Piston Pin Bore - Service	0.002-0.015 mm	0.00008-0.0006 in
• Pin - Piston Pin Diameter	23.952-23.955 mm	0.943-0.943 in
• Pin - Piston Pin Fit in Connecting Rod Bore - Production	0.007-0.02 mm	0.00027-0.00078 in

Application	Specification	
	Metric	English
• Pin - Piston Pin Fit in Connecting Rod Bore - Service	0.007-0.022 mm	0.00027-0.00086 in
• Piston - Piston Diameter - Measured Over Skirt Coating	96.002-96.036 mm	3.779-3.78 in
• Piston - Piston to Bore Clearance - Production	-0.036 to +0.016 mm	-0.0014 to +0.0006 in
• Piston - Piston to Bore Clearance - Service Limit with Skirt Coating Worn Off	0.071 mm	0.0028 in
Valve System		
• Valves - Valve Face Angle	45 degrees	
• Valves - Valve Face Width	1.25 mm	0.05 in
• Valves - Valve Lash	Net Lash - No Adjustment	
• Valves - Valve Lift - Intake	12.24 mm	0.482 in
• Valves - Valve Lift - Exhaust	12.24 mm	0.482 in
• Valves - Valve Seat Angle	46 degrees	
• Valves - Valve Seat Runout	0.05 mm	0.002 in
• Valves - Valve Seat Width - Exhaust	1.78 mm	0.07 in
• Valves - Seat Width - Intake	1.02 mm	0.04 in
• Valves - Valve Stem Diameter - Production	7.955-7.976 mm	0.313-0.314 in
• Valves - Valve Stem Diameter - Service	7.95 mm	0.313 in
• Valves - Valve Stem-to-Guide Clearance - Production - Intake	0.025-0.066 mm	0.001-0.0026 in
• Valves - Valve Stem-to-Guide Clearance - Service - Intake	0.093 mm	0.0037 in
• Valves - Valve Stem-to-Guide Clearance - Production - Exhaust	0.025-0.066 mm	0.001-0.0026 in
• Valves - Valve Stem-to-Guide Clearance - Service - Exhaust	0.093 mm	0.0037 in
• Rocker Arms - Valve Rocker Arm Ratio	1.70:1	
• Valve Springs - Valve Spring Free Length	52.9 mm	2.08 in
• Valve Springs - Valve Spring Installed Height	45.75 mm	1.8 in
• Valve Springs - Valve Spring Load - Closed	340 N at 45.75 mm	76 lb at 1.8 in
• Valve Springs - Valve Spring Load - Open	980 N at 33.55 mm	220 lb at 1.32 in

General Specifications 6.0L (LQ4 VIN U)

Application	Specification	
	Metric	English
General		
• Engine Type	V8	
• Displacement	6.0L	364 CID
• RPO	LQ4	
• VIN	U	
• Bore	101.618-101.636 mm	4.0007-4.0014 in
• Stroke	92.0 mm	3.622 in
• Compression Ratio	9.4:1	
• Firing Order	1-8-7-2-6-5-4-3	
• Spark Plug Gap	1.02 mm	0.04 in
Block		
• Camshaft Bearing Bore 1 and 5 Diameter	59.62-59.67 mm	2.347-2.349 in
• Camshaft Bearing Bore 2 and 4 Diameter	59.12-59.17 mm	2.327-2.329 in
• Camshaft Bearing Bore 3 Diameter	58.62-58.67 mm	2.307-2.309 in
• Crankshaft Main Bearing Bore Diameter	69.871-69.889 mm	2.75-2.751 in
• Crankshaft Main Bearing Bore Out-of-Round	0.006 mm	0.0002 in
• Cylinder Bore Diameter	101.618-101.636 mm	4.0007-4.0017 in
• Cylinder Head Deck Height - Measuring from the Centerline of Crankshaft to the Deck Face	234.57-234.82 mm	9.235-9.245 in
• Cylinder Head Deck Surface Flatness - Measured within a 152.4 mm (6.0 in) Area	0.11 mm	0.004 in
• Cylinder Head Deck Surface Flatness - Measuring the Overall Length of the Block Deck	0.22 mm	0.008 in
• Valve Lifter Bore Diameter	21.417-21.443 mm	0.843-0.844 in
Camshaft		
• Camshaft End Play	0.025-0.305 mm	0.001-0.012 in
• Camshaft Journal Diameter	54.99-55.04 mm	2.164-2.166 in
• Camshaft Journal Out-of-Round	0.025 mm	0.001 in
• Camshaft Lobe Lift - Exhaust	7.13 mm	0.281 in
• Camshaft Lobe Lift - Intake	6.96 mm	0.274 in
• Camshaft Runout - Measured at the Intermediate Journals	0.05 mm	0.002 in
Connecting Rod		
• Connecting Rod Bearing Clearance - Production	0.023-0.065 mm	0.0009-0.0025 in
• Connecting Rod Bearing Clearance - Service	0.023-0.076 mm	0.0009-0.003 in
• Connecting Rod Bore Diameter - Bearing End	56.505-56.525 mm	2.224-2.225 in
• Connecting Rod Bore Out-of-Round - Bearing End - Production	0.006 mm	0.0002 in
• Connecting Rod Bore Out-of-Round - Bearing End - Service	0.006 mm	0.0002 in
• Connecting Rod Side Clearance	0.11-0.51 mm	0.00433-0.02 in

Application	Specification	
	Metric	English
Crankshaft		
• Connecting Rod Journal Diameter - Production	53.318-53.338 mm	2.0991-2.0999 in
• Connecting Rod Journal Diameter - Service	53.308 mm	2.0987 in
• Connecting Rod Journal Out-of-Round - Production	0.005 mm	0.0002 in
• Connecting Rod Journal Out-of-Round - Service	0.01 mm	0.0004 in
• Connecting Rod Journal Taper - Maximum for 1/2 of Journal Length - Production	0.005 mm	0.0002 in
• Connecting Rod Journal Taper - Maximum for 1/2 of Journal Length - Service	0.02 mm	0.00078 in
• Crankshaft End Play	0.04-0.2 mm	0.0015-0.0078 in
• Crankshaft Main Bearing Clearance - Production	0.02-0.052 mm	0.0008-0.0021 in
• Crankshaft Main Bearing Clearance - Service	0.02-0.065 mm	0.0008-0.0025 in
• Crankshaft Main Journal Diameter - Production	64.992-65.008 mm	2.558-2.559 in
• Crankshaft Main Journal Diameter - Service	64.992 mm	2.558 in
• Crankshaft Main Journal Out-of-Round - Production	0.003 mm	0.000118 in
• Crankshaft Main Journal Out-of-Round - Service	0.008 mm	0.0003 in
• Crankshaft Main Journal Taper - Production	0.01 mm	0.0004 in
• Crankshaft Main Journal Taper - Service	0.02 mm	0.00078 in
• Crankshaft Rear Flange Runout	0.05 mm	0.002 in
• Crankshaft Reluctor Ring Runout - Measured 1.0 mm (0.04 in) Below Tooth Diameter	0.7 mm	0.028 in
• Crankshaft Thrust Surface - Production	26.14-26.22 mm	1.029-1.0315 in
• Crankshaft Thrust Surface - Service	26.22 mm	1.0315 in
• Crankshaft Thrust Surface Runout	0.025 mm	0.001 in
Cylinder Head		
• Cylinder Head Height/Thickness - Measured from the Cylinder Head Deck to the Valve Rocker Arm Cover Seal Surface	120.2 mm	4.732 in
• Surface Flatness - Block Deck - Measured within a 152.4 mm (6.0 in) Area	0.08 mm	0.003 in
• Surface Flatness - Block Deck - Measuring the Overall Length of the Cylinder Head	0.1 mm	0.004 in
• Surface Flatness - Exhaust Manifold Deck	0.13 mm	0.005 in
• Surface Flatness - Intake Manifold Deck	0.08 mm	0.0031 in
• Valve Guide Installed Height - Measured from the Spring Seat Surface to the Top of the Guide	17.32 mm	0.682 in
Intake Manifold		
• Surface Flatness - Measured at Gasket Sealing Surfaces and Measured within a 200 mm (7.87 in) Area that Includes 2 Runner Port Openings	0.3 mm	0.118 in

Application	Specification	
	Metric	English
Lubrication System		
• Oil Capacity - with Filter	5.68 liters	6.0 quarts
• Oil Capacity - without Filter	4.73 liters	5.0 quarts
• Oil Pressure - Minimum - Hot	41 kPa at 1,000 engine RPM 124 kPa at 2,000 engine RPM 165 kPa at 4,000 engine RPM	6 psig at 1,000 engine RPM 18 psig at 2,000 engine RPM 24 psig at 4,000 engine RPM
Oil Pan		
• Front Cover Alignment - at Oil Pan Surface	0.0-0.5 mm	0.0-0.02 in
• Rear Housing Alignment - at Oil Pan Surface	0.0-0.5 mm	0.0-0.02 in
• Oil Pan Alignment - to Rear of Engine Block at Transmission Bell Housing Mounting Surface	0.0-0.1 mm	0.0-0.004 in
Piston Rings		
• Piston Ring End Gap - First Compression Ring - Measured in Cylinder Bore - Production	0.31-0.52 mm	0.012-0.02 in
• Piston Ring End Gap - First Compression Ring - Measured in Cylinder Bore - Service	0.31-0.59 mm	0.0122-0.023 in
• Piston Ring End Gap - Second Compression Ring - Measured in Cylinder Bore - Production	0.51-0.77 mm	0.02-0.03 in
• Piston Ring End Gap - Second Compression Ring - Measured in Cylinder Bore - Service	0.51-0.84 mm	0.02-0.033 in
• Piston Ring End Gap - Oil Control Ring - Measured in Cylinder Bore - Production	0.31-0.87 mm	0.0122-0.034 in
• Piston Ring End Gap - Oil Control Ring - Measured in Cylinder Bore - Service	0.31-0.94 mm	0.0122-0.037 in
• Piston Ring to Groove Clearance - First Compression Ring - Production	0.04-0.08 mm	0.00157-0.0031 in
• Piston Ring to Groove Clearance - First Compression Ring - Service	0.04-0.08 mm	0.00157-0.0031 in
• Piston Ring to Groove Clearance - Second Compression Ring - Production	0.039-0.079 mm	0.0015-0.0031 in
• Piston Ring to Groove Clearance - Second Compression Ring - Service	0.039-0.079 mm	0.0015-0.0031 in
• Piston Ring to Groove Clearance - Oil Control Ring - Production	0.015-0.199 mm	0.0006-0.0078 in
• Piston Ring to Groove Clearance - Oil Control Ring - Service	0.015-0.199 mm	0.0006-0.0078 in
Pistons and Pins		
• Pin - Piston Pin Clearance to Piston Pin Bore - Production	0.002-0.01 mm	0.00008-0.0004 in
• Pin - Piston Pin Clearance to Piston Pin Bore - Service	0.002-0.015 mm	0.00008-0.0006 in
• Pin - Piston Pin Diameter	23.952-23.955 mm	0.943-0.943 in
• Pin - Piston Pin Fit in Connecting Rod Bore - Production	0.007-0.02 mm	0.00027-0.00078 in
• Pin - Piston Pin Fit in Connecting Rod Bore - Service	0.007-0.022 mm	0.00027-0.00086 in
• Piston - Piston Diameter - Measured Over Skirt Coating	101.606-101.640 mm	4.0002-4.0016 in

Application	Specification	
	Metric	English
• Piston - Piston to Bore Clearance - Production	-0.022 to +0.03 mm - interference	-0.0009 to +0.0012 in - interference
• Piston - Piston to Bore Clearance - Service Limit with Skirt Coating Worn Off	0.07 mm	0.0028 in
Valve System		
• Valves - Valve Face Angle	45 degrees	
• Valves - Valve Face Width	1.25 mm	0.05 in
• Valves - Valve Lash	Net Lash - No Adjustment	
• Valves - Valve Lift - Exhaust	12.11 mm	0.477 in
• Valves - Valve Lift - Intake	11.83 mm	0.466 in
• Valves - Valve Seat Angle	46 degrees	
• Valves - Valve Seat Runout	0.05 mm	0.002 in
• Valves - Valve Seat Width - Exhaust	1.78 mm	0.07 in
• Valves - Valve Seat Width - Intake	1.02 mm	0.04 in
• Valves - Valve Stem Diameter - Production	7.955-7.976 mm	0.313-0.314 in
• Valves - Valve Stem Diameter - Service	7.95 mm	0.313 in
• Valves - Valve Stem-to-Guide Clearance - Production - Intake	0.025-0.066 mm	0.001-0.0026 in
• Valves - Valve Stem-to-Guide Clearance - Service - Intake	0.093 mm	0.0037 in
• Valves - Valve Stem-to-Guide Clearance - Production - Exhaust	0.025-0.066 mm	0.001-0.0026 in
• Valves - Valve Stem-to-Guide Clearance - Service - Exhaust	0.093 mm	0.0037 in
• Rocker Arms - Valve Rocker Arm Ratio	1.70:1	
• Valve Springs - Valve Spring Free Length	52.9 mm	2.08 in
• Valve Springs - Valve Spring Installed Height	45.75 mm	1.8 in
• Valve Springs - Valve Spring Load - Closed	340 N at 45.75 mm	76 lb at 1.8 in
• Valve Springs - Valve Spring Load - Open	980 N at 33.55 mm	220 lb at 1.32 in

General Specifications 6.0L (LQ9 VIN N)

Application	Specification	
	Metric	English
General		
• Engine Type	V8	
• Displacement	6.0L	364 CID
• RPO	LQ9	
• VIN	N	
• Bore	101.618-101.636 mm	4.0007-4.0014 in
• Stroke	92.0 mm	3.622 in
• Compression Ratio	10.0:1	
• Firing Order	1-8-7-2-6-5-4-3	
• Spark Plug Gap	1.02 mm	0.04 in
Block		
• Camshaft Bearing Bore 1 and 5 Diameter	59.62-59.67 mm	2.347-2.349 in
• Camshaft Bearing Bore 2 and 4 Diameter	59.12-59.17 mm	2.327-2.329 in
• Camshaft Bearing Bore 3 Diameter	58.62-58.67 mm	2.307-2.309 in
• Crankshaft Main Bearing Bore Diameter	69.871-69.889 mm	2.75-2.751 in
• Crankshaft Main Bearing Bore Out-of-Round	0.006 mm	0.0002 in
• Cylinder Bore Diameter	101.618-101.636 mm	4.0007-4.0017 in
• Cylinder Head Deck Height - Measuring from the Centerline of Crankshaft to the Deck Face	234.57-234.82 mm	9.235-9.245 in
• Cylinder Head Deck Surface Flatness - Measured within a 152.4 mm (6.0 in) Area	0.11 mm	0.004 in
• Cylinder Head Deck Surface Flatness - Measuring the Overall Length of the Block Deck	0.22 mm	0.008 in
• Valve Lifter Bore Diameter	21.417-21.443 mm	0.843-0.844 in
Camshaft		
• Camshaft End Play	0.025-0.305 mm	0.001-0.012 in
• Camshaft Journal Diameter	54.99-55.04 mm	2.164-2.166 in
• Camshaft Journal Out-of-Round	0.025 mm	0.001 in
• Camshaft Lobe Lift - Exhaust	7.13 mm	0.281 in
• Camshaft Lobe Lift - Intake	6.96 mm	0.274 in
• Camshaft Runout - Measured at the Intermediate Journals	0.05 mm	0.002 in
Connecting Rod		
• Connecting Rod Bearing Clearance - Production	0.023-0.065 mm	0.0009-0.0025 in
• Connecting Rod Bearing Clearance - Service	0.023-0.076 mm	0.0009-0.003 in
• Connecting Rod Bore Diameter - Bearing End	56.505-56.525 mm	2.224-2.225 in
• Connecting Rod Bore Out-of-Round - Bearing End - Production	0.006 mm	0.00023 in
• Connecting Rod Bore Out-of-Round - Bearing End - Service	0.004-0.008 mm	0.00015-0.0003 in
• Connecting Rod Side Clearance	0.11-0.51 mm	0.00433-0.02 in

Application	Specification	
	Metric	English
Crankshaft		
• Connecting Rod Journal Diameter - Production	53.318-53.338 mm	2.0991-2.0999 in
• Connecting Rod Journal Diameter - Service	53.308 mm	2.0987 in
• Connecting Rod Journal Out-of-Round - Production	0.005 mm	0.0002 in
• Connecting Rod Journal Out-of-Round - Service	0.01 mm	0.0004 in
• Connecting Rod Journal Taper - Maximum for 1/2 of Journal Length - Production	0.005 mm	0.0002 in
• Connecting Rod Journal Taper - Maximum for 1/2 of Journal Length - Service	0.02 mm	0.00078 in
• Crankshaft End Play	0.04-0.2 mm	0.0015-0.0078 in
• Crankshaft Main Bearing Clearance - Production	0.02-0.052 mm	0.0008-0.0021 in
• Crankshaft Main Bearing Clearance - Service	0.02-0.065 mm	0.0008-0.0025 in
• Crankshaft Main Journal Diameter - Production	64.992-65.008 mm	2.558-2.559 in
• Crankshaft Main Journal Diameter - Service	64.992 mm	2.558 in
• Crankshaft Main Journal Out-of-Round - Production	0.003 mm	0.000118 in
• Crankshaft Main Journal Out-of-Round - Service	0.008 mm	0.0003 in
• Crankshaft Main Journal Taper - Production	0.01 mm	0.0004 in
• Crankshaft Main Journal Taper - Service	0.02 mm	0.00078 in
• Crankshaft Rear Flange Runout	0.05 mm	0.002 in
• Crankshaft Reluctor Ring Runout - Measured 1.0 mm (0.04 in) Below Tooth Diameter	0.7 mm	0.028 in
• Crankshaft Thrust Surface - Production	26.14-26.22 mm	1.029-1.0315 in
• Crankshaft Thrust Surface - Service	26.22 mm	1.0315 in
• Crankshaft Thrust Surface Runout	0.025 mm	0.001 in
Cylinder Head		
• Cylinder Head Height/Thickness - Measured from the Cylinder Head Deck to the Valve Rocker Arm Cover Seal Surface	120.2 mm	4.732 in
• Surface Flatness - Block Deck - Measured Within a 152.4 mm (6.0 in) Area	0.08 mm	0.003 in
• Surface Flatness - Block Deck - Measuring the Overall Length of the Cylinder Head	0.1 mm	0.004 in
• Surface Flatness - Exhaust Manifold Deck	0.13 mm	0.005 in
• Surface Flatness - Intake Manifold Deck	0.08 mm	0.0031 in
• Valve Guide Installed Height - Measured from the Spring Seat Surface to the Top of the Guide	17.32 mm	0.682 in
Intake Manifold		
• Surface Flatness - Measured at Gasket Sealing Surfaces and Measured Within a 200 mm (7.87 in) Area that Includes 2 Runner Port Openings	0.3 mm	0.118 in

Application	Specification	
	Metric	English
Lubrication System		
• Oil Capacity - with Filter	5.68 liters	6.0 quarts
• Oil Capacity - without Filter	4.73 liters	5.0 quarts
• Oil Pressure - Minimum - Hot	41 kPa at 1,000 engine RPM 124 kPa at 2,000 engine RPM 165 kPa at 4,000 engine RPM	6 psig at 1,000 engine RPM 18 psig at 2,000 engine RPM 24 psig at 4,000 engine RPM
Oil Pan		
• Front Cover Alignment - at Oil Pan Surface	0.0-0.5 mm	0.0-0.02 in
• Rear Housing Alignment - at Oil Pan Surface	0.0-0.5 mm	0.0-0.02 in
• Oil Pan Alignment - to Rear of Engine Block at Transmission Bell Housing Mounting Surface	0.0-0.1 mm	0.0-0.004 in
Piston Rings		
• Piston Ring End Gap - First Compression Ring - Measured in Cylinder Bore - Production	0.31-0.52 mm	0.012-0.02 in
• Piston Ring End Gap - First Compression Ring - Measured in Cylinder Bore - Service	0.31-0.59 mm	0.0122-0.023 in
• Piston Ring End Gap - Second Compression Ring - Measured in Cylinder Bore - Production	0.51-0.77 mm	0.02-0.03 in
• Piston Ring End Gap - Second Compression Ring - Measured in Cylinder Bore - Service	0.51-0.84 mm	0.02-0.033 in
• Piston Ring End Gap - Oil Control Ring - Measured in Cylinder Bore - Production	0.31-0.87 mm	0.0122-0.034 in
• Piston Ring End Gap - Oil Control Ring - Measured in Cylinder Bore - Service	0.31-0.94 mm	0.0122-0.037 in
• Piston Ring to Groove Clearance - First Compression Ring - Production	0.035-0.08 mm	0.0014-0.0031 in
• Piston Ring to Groove Clearance - First Compression Ring - Service	0.035-0.08 mm	0.0014-0.0031 in
• Piston Ring to Groove Clearance - Second Compression Ring - Production	0.034-0.079 mm	0.0013-0.003 in
• Piston Ring to Groove Clearance - Second Compression Ring - Service	0.034-0.079 mm	0.0013-0.003 in
• Piston Ring to Groove Clearance - Oil Control Ring - Production	0.012-0.2 mm	0.00047-0.00078 in
• Piston Ring to Groove Clearance - Oil Control Ring - Service	0.012-0.2 mm	0.00047-0.00078 in
Pistons and Pins		
• Pin - Piston Pin Clearance to Piston Pin Bore - Production	0.002-0.01 mm	0.00008-0.0004 in
• Pin - Piston Pin Clearance to Piston Pin Bore - Service	0.002-0.015 mm	0.00008-0.0006 in
• Pin - Piston Pin Diameter	23.952-23.955 mm	0.943-0.943 in
• Pin - Piston Pin Fit in Connecting Rod Bore - Production	0.007-0.02 mm	0.00027-0.00078 in

Application	Specification	
	Metric	English
• Pin - Piston Pin Fit in Connecting Rod Bore - Service	0.007-0.022 mm	0.00027-0.00086 in
• Piston - Piston Diameter - Measured Over Coating - at Size Point	101.611-101.642 mm	4.0-4.001 in
• Piston - Piston to Bore Clearance - Production	-0.022 to +0.030 mm	-0.0009 to +0.0012 in
• Piston - Piston to Bore Clearance - With Skirt Coating Worn Off - Service	0.024-0.08 mm	0.00094-0.0031 in
Valve System		
• Valves - Valve Face Angle	45 degrees	
• Valves - Valve Face Width	1.25 mm	0.05 in
• Valves - Valve Lash	Net Lash - No Adjustment	
• Valves - Valve Lift - Intake	11.83 mm	0.466 in
• Valves - Valve Lift - Exhaust	12.11 mm	0.477 in
• Valves - Valve Seat Angle	46 degrees	
• Valves - Valve Seat Runout	0.05 mm	0.002 in
• Valves - Valve Seat Width - Exhaust	1.78 mm	0.07 in
• Valves - Valve Seat Width - Intake	1.02 mm	0.04 in
• Valves - Valve Stem Diameter - Production	7.955-7.976 mm	0.313-0.314 in
• Valves - Valve Stem Diameter - Service	7.95 mm	0.313 in
• Valves - Valve Stem-to-Guide Clearance - Production - Intake	0.025-0.066 mm	0.001-0.0026 in
• Valves - Valve Stem-to-Guide Clearance - Service - Intake	0.093 mm	0.0037 in
• Valves - Valve Stem-to-Guide Clearance - Production - Exhaust	0.025-0.066 mm	0.001-0.0026 in
• Valves - Valve Stem-to-Guide Clearance - Service - Exhaust	0.093 mm	0.0037 in
• Rocker Arms - Valve Rocker Arm Ratio	1.70:1	
• Valve Springs - Valve Spring Free Length	52.9 mm	2.08 in
• Valve Springs - Valve Spring Installed Height	45.75 mm	1.8 in
• Valve Springs - Valve Spring Load - Closed	340 N at 45.75 mm	76 lb at 1.8 in
• Valve Springs - Valve Spring Load - Open	980 N at 33.55 mm	220 lb at 1.32 in

Fastener Tightening Specifications

Application	Specification	
	Metric	English
3-Phase Cable Bracket Cover Bolt - RPO HP2	9 N·m	80 lb in
3-Phase Cable Bracket Nut - RPO HP2	15 N·m	11 lb ft
3-Phase Cable Nut-to-Starter/Generator - RPO HP2	14 N·m	10 lb ft
3-Phase Cable Nut-to-Starter/Generator Control Module (SGCM) - RPO HP2	15 N·m	11 lb ft
Air Cleaner Outlet Duct Clamp Screw	7 N·m	62 lb in
Air Conditioning (A/C) Belt Tensioner Bolt	50 N·m	37 lb ft
Air Conditioning (A/C) Compressor Bolt	50 N·m	37 lb ft
Air Conditioning (A/C) Discharge Hose Bolt	16 N·m	12 lb ft
Air Conditioning (A/C) Suction Hose Bolt	16 N·m	12 lb ft
Auxiliary Heater Water Pump Bracket Bolt - RPO HP2	15 N·m	11 lb ft
Battery Cable Channel Bolt	12 N·m	106 lb in
Battery Cable Junction Block Bracket Bolt - RPO HP2	9 N·m	80 lb in
Camshaft Position (CMP) Sensor Bolt	25 N·m	18 lb ft
Camshaft Retainer Bolt - Hex Head Bolt	25 N·m	18 lb ft
Camshaft Retainer Bolt - TORX® Head Bolt	15 N·m	11 lb ft
Camshaft Sprocket Bolts	35 N·m	26 lb ft
Clutch Pressure Plate Bolt	70 N·m	53 lb ft
Connecting Rod Bolts - First Pass	20 N·m	15 lb ft
Connecting Rod Bolts - Final Pass	75 degrees	
Coolant Temperature Sensor	20 N·m	15 lb ft
Crankshaft Balancer Bolt - Installation Pass - to Ensure the Balancer is Completely Installed	330 N·m	240 lb ft
Crankshaft Balancer Bolt - First Pass - Install a NEW Bolt After the Installation Pass and Tighten as Described in the First and Final Passes	50 N·m	37 lb ft
Crankshaft Balancer Bolt - Final Pass	140 degrees	
Crankshaft Bearing Cap M8 Bolts	25 N·m	18 lb ft
Crankshaft Bearing Cap M10 Bolts - First Pass in Sequence	20 N·m	15 lb ft
Crankshaft Bearing Cap M10 Bolts - Final Pass in Sequence	80 degrees	
Crankshaft Bearing Cap M10 Studs - First Pass in Sequence	20 N·m	15 lb ft
Crankshaft Bearing Cap M10 Studs - Final Pass in Sequence	51 degrees	
Crankshaft Oil Deflector Nut	25 N·m	18 lb ft
Crankshaft Position (CKP) Sensor Bolt	25 N·m	18 lb ft
Crossbar Bolt	100 N·m	74 lb ft
Cylinder Head M8 Bolts - in Sequence	30 N·m	22 lb ft
Cylinder Head M11 Bolts - First Pass in Sequence	30 N·m	22 lb ft
Cylinder Head M11 Bolts - Second Pass in Sequence	90 degrees	
Cylinder Head M11 Bolts - Final Pass in Sequence	70 degrees	
Cylinder Head Coolant Plug	20 N·m	15 lb ft
Differential Carrier Lower Mounting Bolt/Nut	100 N·m	74 lb ft
Drive Belt Idler Pulley Bolt	50 N·m	37 lb ft
Drive Belt Tensioner Bolt	50 N·m	37 lb ft
Engine Block Coolant Drain Hole Plug	60 N·m	44 lb ft
Engine Block Coolant Heater	50 N·m	37 lb ft
Engine Block Oil Gallery Plugs	60 N·m	44 lb ft
Engine Coolant Air Bleed Pipe and Cover Bolts	12 N·m	106 lb in
Engine Coolant Fitting - RPO HP2	35 N·m	26 lb ft
Engine Harness Ground Bolt - Right Rear	16 N·m	12 lb ft
Engine Harness Ground Bolt-to-Block	25 N·m	18 lb ft

Application	Specification	
	Metric	English
Engine Mount Bolt	50 N·m	37 lb ft
Engine Mount Bracket Through Bolt	75 N·m	55 lb ft
Engine Mount-to-Engine Mount Bracket Bolt	65 N·m	50 lb ft
Engine Shield Bolt	20 N·m	15 lb ft
Engine Wiring Harness Bracket Nut	5 N·m	44 lb in
Evaporative Emission (EVAP) Canister Purge Solenoid Valve Bolt	10 N·m	89 lb in
Exhaust Manifold Bolts - First Pass	15 N·m	11 lb ft
Exhaust Manifold Bolts - Final Pass	25 N·m	18 lb ft
Exhaust Manifold Heat Shield Bolts	9 N·m	80 lb in
Flex Plate/Rotor Bolts - RPO HP2	100 N·m	74 lb ft
Flywheel Bolts - First Pass	20 N·m	15 lb ft
Flywheel Bolts - Second Pass	50 N·m	37 lb ft
Flywheel Bolts - Final Pass	100 N·m	74 lb ft
Front Cover Bolts	25 N·m	18 lb ft
Fuel Injection Fuel Rail Bolts	10 N·m	89 lb in
Fuel Rail Cover Bolt	9 N·m	80 lb in
Fuel Rail Crossover Tube Bolts	3.8 N·m	34 lb in
Fuel Rail Stop Bracket Bolt	50 N·m	37 lb ft
Generator Bracket Bolt	50 N·m	37 lb ft
Generator Cable Nut	9 N·m	80 lb in
Generator Coolant Inlet Hose Bolt - RPO HP2	10 N·m	89 lb in
Generator Coolant Outlet Pipe Stud - RPO HP2	6 N·m	53 lb in
Heater Hose Bracket Nut	9 N·m	80 lb in
Hood Hinge Bolt	25 N·m	18 lb ft
Ignition Coil Bracket-to-Valve Rocker Arm Cover Stud	12 N·m	106 lb in
Ignition Coil-to-Bracket Bolts	10 N·m	89 lb in
Inner Axle Housing Nut	100 N·m	74 lb ft
Intake Manifold Bolts - First Pass in Sequence	5 N·m	44 lb in
Intake Manifold Bolts - Final Pass in Sequence	10 N·m	89 lb in
Intake Manifold Sight Shield Bolt	10 N·m	89 lb in
Intake Manifold Sight Shield Retainer Bolt	5 N·m	44 lb in
Intake Manifold Wiring Harness Stud	10 N·m	89 lb in
J 41712 M8 Bolt	25 N·m	18 lb ft
J 41712 M10 Bolts	50 N·m	37 lb ft
J 42286-A Bolt	50 N·m	37 lb ft
J 46093 Bolt	50 N·m	37 lb ft
Knock Sensors	20 N·m	15 lb ft
Oil Filter	30 N·m	22 lb ft
Oil Filter Fitting	55 N·m	40 lb ft
Oil Level Indicator Tube Bolt	25 N·m	18 lb ft
Oil Level Sensor	13 N·m	115 lb in
Oil Pan Baffle Bolts	12 N·m	106 lb in
Oil Pan Closeout Cover Bolt - Left Side	12 N·m	106 lb in
Oil Pan Closeout Cover Bolt - Right Side	12 N·m	106 lb in
Oil Pan Cover Bolts	12 N·m	106 lb in
Oil Pan Drain Plug	25 N·m	18 lb ft
Oil Pan M6 Bolts - Oil Pan-to-Rear Housing	12 N·m	106 lb in
Oil Pan M8 Bolts - Oil Pan-to-Engine Block and Oil Pan-to-Front Cover	25 N·m	18 lb ft
Oil Pan Skid Plate Bolt	20 N·m	15 lb ft
Oil Pressure Sensor	35 N·m	26 lb ft
Oil Pump Cover Bolts	12 N·m	106 lb in

Application	Specification	
	Metric	English
Oil Pump Relief Valve Plug	12 N·m	106 lb in
Oil Pump Screen Nuts	25 N·m	18 lb ft
Oil Pump Screen-to-Oil Pump Bolt	12 N·m	106 lb in
Oil Pump-to-Engine Block Bolts	25 N·m	18 lb ft
Positive Battery Cable Clip Bolt	9 N·m	80 lb in
Power Steering Pump Bolt - RPO HP2	25 N·m	18 lb ft
Power Steering Pump Bracket Bolt - RPO HP2	25 N·m	18 lb ft
Power Steering Pump Harness Bolt - RPO HP2	25 N·m	18 lb ft
Power Steering Pump Harness Ground Bolt - RPO HP2	25 N·m	18 lb ft
Power Steering Pump Rear Bolt	50 N·m	37 lb ft
Rear Oil Seal Housing Bolts	30 N·m	22 lb ft
Spark Plugs	15 N·m	11 lb ft
Starter/Generator Control Module (SGCM) Cover Bolts - RPO HP2	9 N·m	80 lb in
Stator Stud - RPO HP2	16 N·m	12 lb ft
Throttle Body Nuts	10 N·m	89 lb in
Throttle Body Studs	6 N·m	53 lb in
Torque Converter Bolt - 4L60-E/4L65-E Transmissions	63 N·m	47 lb ft
Torque Converter Bolt - 4L80-E/4L85-E Transmissions	60 N·m	44 lb ft
Transmission Bolt/Stud	50 N·m	37 lb ft
Transmission Cover Bolt	12 N·m	106 lb in
Transmission Nut - RPO HP2	12 N·m	106 lb in
Transmission Oil Level Indicator Tube Nut	18 N·m	13 lb ft
Valley Cover Bolts	25 N·m	18 lb ft
Valve Lifter Guide Bolts	12 N·m	106 lb in
Valve Rocker Arm Bolts	30 N·m	22 lb ft
Valve Rocker Arm Cover Bolts	12 N·m	106 lb in
Water Inlet Housing Bolts	15 N·m	11 lb ft
Water Pump Bolts - First Pass	15 N·m	11 lb ft
Water Pump Bolts - Final Pass	30 N·m	22 lb ft

Engine Component Description

The 4.8, 5.3, and 6.0 Liter V8 Engines

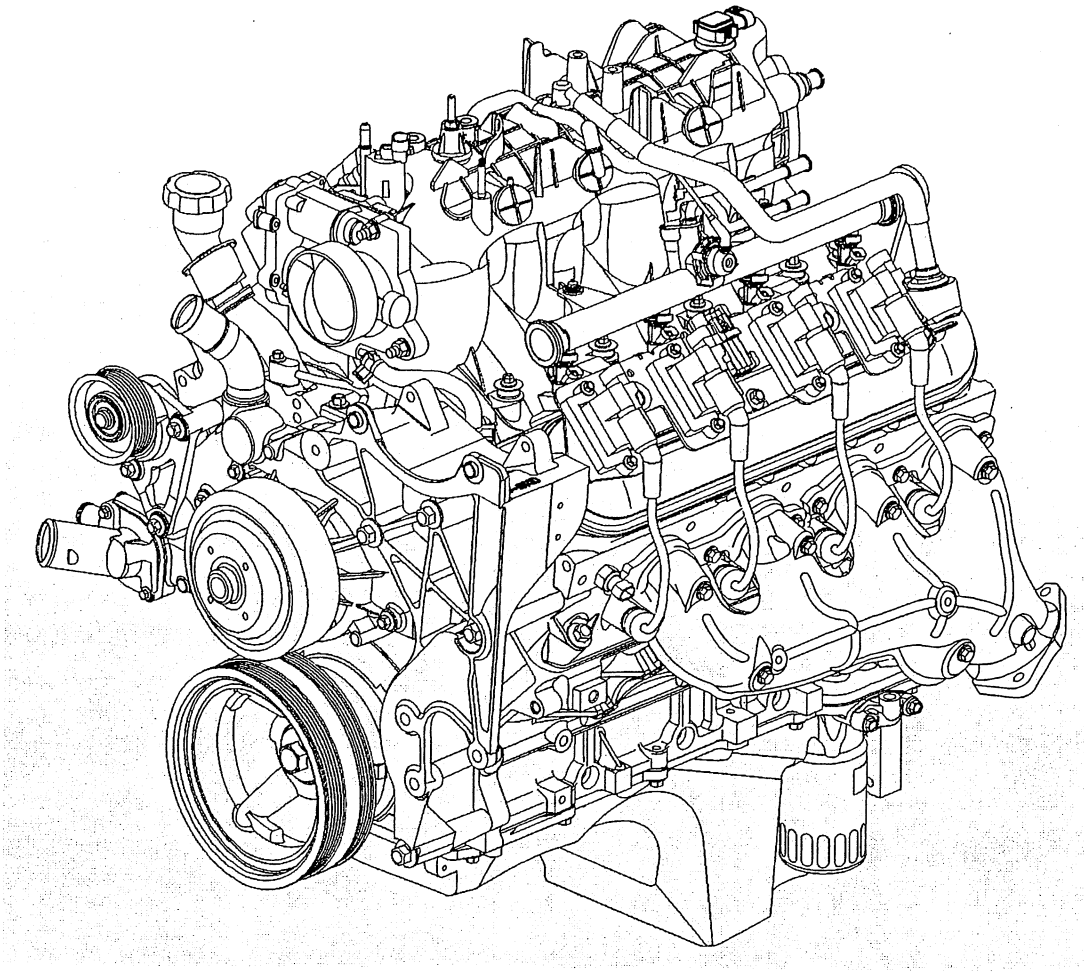

The 4.8, 5.3, and 6.0 liter V8 engines are identified as RPO LR4 VIN V (4.8L), RPO LM7 VIN T (5.3L), RPO L33 VIN B (5.3L), RPO L59 VIN Z (5.3L), RPO LQ4 VIN U (6.0L), and RPO LQ9 VIN N (6.0L).

Camshaft and Drive System

A billet steel 1 piece camshaft is supported by 5 bearings pressed into the engine block. The camshaft has a machined camshaft position (CMP) reluctor ring incorporated between the fourth and fifth bearing journals. The camshaft timing sprocket is mounted to the front of the camshaft and is driven by the crankshaft sprocket through the camshaft timing chain. The splined crankshaft sprocket is positioned to the crankshaft by a key and keyway. The crankshaft sprocket splines drive the oil pump driven gear. A retaining plate mounted to the front of the engine block maintains camshaft location.

Crankshaft

The crankshaft is cast nodular iron. The crankshaft is supported by 5 crankshaft bearings. The bearings are retained by crankshaft bearing caps which are machined with the engine block for proper alignment and clearance. The crankshaft journals are undercut and rolled. The center main journal is the thrust journal. A crankshaft position (CKP) reluctor ring is press fit mounted at the rear of the crankshaft. The reluctor ring is not serviceable separately. All crankshafts will have a short rear flange, at the crankshaft rear oil seal area. Certain 4.8L manual transmissions and 6.0L applications require a spacer between the rear of the crankshaft and the flywheel for proper flywheel positioning. Longer flywheel bolts are required in applications using the spacer.

Cylinder Heads

The cylinder heads are cast aluminum and have pressed in place powdered metal valve guides and valve seats. Passages for the engine coolant air bleed system are at the front of each cylinder head. The valve rocker arm covers are retained to the cylinder head by four center mounted rocker arm cover bolts.

Engine Block

The engine block is a cam-in-block deep skirt 90 degree V configuration with 5 crankshaft bearing caps. For most applications, the engine block is cast iron. RPO L33 applications have an aluminum engine block. The 5 crankshaft bearing caps each have 4 vertical M10 and 2 horizontal M8 mounting bolts. The camshaft is supported by 5 camshaft bearings pressed into the block.

Exhaust Manifolds

The exhaust manifolds are a one piece cast iron design. The exhaust manifolds direct exhaust gasses from the combustion chambers to the exhaust system. Each manifold also has an externally mounted heat shield that is retained by bolts.

Intake Manifold

The intake manifold is a 1 piece composite design that incorporates brass threaded inserts for mounting the fuel rail, throttle body, evaporative emission (EVAP) canister purge solenoid valve, wire harness stud, engine sight shield and sight shield bracket. Each side of the intake manifold is sealed to the cylinder head by a nonreusable silicone sealing gasket and nylon carrier assembly. The electronically actuated throttle body bolts to the front of the intake manifold. The throttle body is sealed by a 1 piece push in place silicone gasket. The fuel rail assembly with 8 separate fuel injectors is retained to the intake by 4 bolts. The injectors are seated into their individual manifold bores with O-ring seals to provide sealing. A fuel rail stop bracket is retained to the rear of the left cylinder head by a mounting bolt. The manifold absolute pressure (MAP) sensor is installed and retained to the top rear of the intake manifold and sealed by an O-ring seal. The EVAP solenoid valve is mounted to the top front of the intake manifold and retained by 1 bolt. There are no coolant passages within the intake manifold.

Oil Pan

The structural oil pan is cast aluminum. Incorporated into the design are the oil filter mounting boss, drain plug opening, oil level sensor mounting bore, and oil pan baffle. The oil pan transfer cover and oil level sensor mount to the sides of the oil pan. The alignment of the structural oil pan to the rear of the engine block and transmission bell housing is critical.

Piston and Connecting Rod Assembly

The pistons are cast aluminum. The pistons use 2 compression rings and 1 oil control ring assembly. The piston is a low friction, lightweight design with a flat or recessed top and barrel shaped skirt. The piston pins are chromium steel and are a full-floating design. The connecting rods are powdered metal. The connecting rods are fractured at the connecting rod journal and then machined for the proper clearance. All applications use a piston with a graphite coated skirt.

Valve Rocker Arm Cover Assemblies

The valve rocker arm covers are cast aluminum and use a pre-molded silicon gasket for sealing. Mounted to each rocker cover are the coil and bracket assemblies. Incorporated into the covers are the oil fill tube, the positive crankcase ventilation (PCV) system passages, and the engine fresh air passages.

Valve Train

Motion is transmitted from the camshaft through the hydraulic roller valve lifters and tubular pushrods to the roller type rocker arms. The nylon valve lifter guides position and retain the valve lifters. The valve rocker arms for each bank of cylinders are mounted on pedestals, pivot supports. Each rocker arm is retained on the pivot support and cylinder head by a bolt. Valve lash is net build.

Lubrication Description

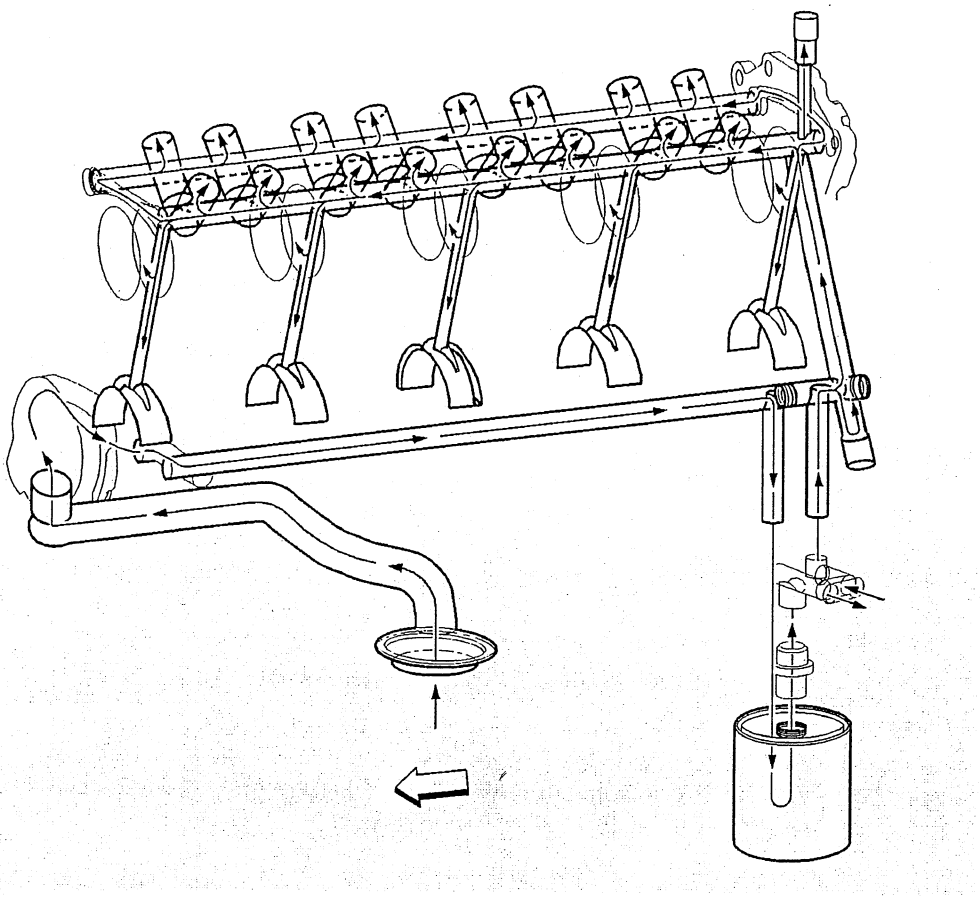

Engine lubrication is supplied by a gerotor type oil pump assembly. The pump is mounted on the front of the engine block and driven directly by the crankshaft sprocket. The pump gears rotate and draw oil from the oil pan sump through a pick-up screen and pipe. The oil is pressurized as it passes through the pump and is sent through the engine block oil galleries. Contained within the oil pump assembly is a pressure relief valve that maintains oil pressure within a specified range. Pressurized oil is directed through the lower gallery to the full flow oil filter where harmful contaminants are removed. A bypass valve is incorporated into the oil pan, at the oil filter boss, which will permit oil flow in the event the filter becomes restricted. At the rear of the block, oil is then directed to the upper main oil galleries which are drilled just above the camshaft assembly. From there oil is then directed to the crankshaft and camshaft bearings. Oil that has entered the upper main oil galleries also pressurizes the valve lifter assemblies and is then pumped through the pushrods to lubricate the valve rocker arms and valve stems. Oil returning to the pan is directed by the crankshaft oil deflector. Oil pressure and crankcase level are each monitored by individual sensors.

An external oil cooler is available on certain applications, all 6.0L. Oil is directed from the oil pump, through the lower main oil gallery to the full flow oil filter. Oil is then directed through the oil pan outlet oil gallery, located in the left rear of the oil pan, and to the external oil cooler via a hose assembly. Oil flows through the oil cooler and returns to the engine at the oil pan inlet oil gallery, located in the left rear of the oil pan. Oil is then directed to the upper main oil galleries and the remainder of the engine assembly.

Drive Belt System Description

See Drive Belt System Description above.

Crankcase Ventilation System Description

General Description

A crankcase ventilation system is used to consume crankcase vapors in the combustion process instead of venting them to the atmosphere. Fresh air from the intake system is supplied to the crankcase, mixed with blow by gases and then passed through a calibrated orifice into the intake manifold.

Operation

The primary control is through the positive crankcase ventilation (PCV) orifice which meters the flow at a rate depending on inlet vacuum. The PCV orifice is an integral part of the valve cover. If abnormal operating conditions occur, the system is designed to allow excessive amounts of blow by gases to back flow through the crankcase vent into the intake system to be consumed by normal combustion.

Results of Incorrect Operation

A plugged orifice may cause the following conditions:

- Rough idle
- Stalling or slow idle speed
- Oil leaks
- Sludge in engine

A leaking orifice may cause the following conditions:

- Rough idle
- Stalling
- High idle speed

Engine Mechanical –6.6L Diesel (RPO LLY)

Engine Mechanical Specifications

Application	Specification	
	Metric	English
General		
• Engine Type	90 degree V-8	
• Displacement	6.6 Liter	402 cu in
• RPO	LLY	
• Bore	103 mm	4.0551 in
• Stroke	99 mm	3.8976 in
• Compression Ratio	16.8:1	
• Engine Compression Test - Minimum	2069 KPa	300 psi
• Idle Speed	680 RPM	
• Firing Order	1-2-7-8-4-5-6-3	
Block		
• Cylinder Bore Diameter - Service Limits	103.11 mm	4.0594 in
• Cylinder Bore Diameter - Production Value	103.0-103.014 mm	4.0551-4.0557 in
• Cylinder Bore Out-of-Round - Production Value	0.015 mm	0.0006 in
• Cylinder Bore Taper - Production Value	0.015 mm	0.0006 in
Camshaft		
• Camshaft Bearing Inside Diameter - Service Limit	61.07 mm	2.4043 in
• Camshaft Bearing Inside Diameter - Production Value	61.00-61.03 mm	2.4016-2.4028 in
• Camshaft End Play - Service Limit	0.2 mm	0.0079 in
• Camshaft Journal Diameter - Service Limit	60.92 mm	2.3984 in
• Camshaft Journal Diameter - Production Value	60.932-60.962 mm	2.3990-2.4001 in
• Camshaft Lobe Lift - Exhuast - Production Value	5.907 mm	0.2326 in
• Camshaft Lobe Lift - Intake - Production Value	7.273 mm	0.2863 in
• Camshaft Runout - Service Limit	0.05 mm	0.0020 in
Cooling System		
• Capacity @ Engine RPM	270 L/min @ 3172 RPM	
• Thermostat Full Open Temperature	110 degrees C	230 degrees F
• Turbocharger Coolant Bypass Valve	60 degrees C	140 degrees F
Connecting Rod		
• Connecting Rod Bearing Clearance - Service Limit	0.10 mm	0.0039 in
• Connecting Rod Bearing Clearance - Production Value	0.036-0.077 mm	0.0014-0.0030 in
• Connecting Rod Bore Diameter - Bearing End - Production Value	62.958-62.979 mm	2.4789-2.4795 in
• Connecting Rod Bore Diameter - Pin End - Service Limit	34.53 mm	1.3594 in
• Connecting Rod Bore Diameter - Pin End - Production Value	34.512-34.522 mm	1.3587-1.3591 in
• Connecting Rod Length	163.0 mm	6.42 in
• Connecting Rod Side Clearance - Service Limit	0.54 mm	0.0213 in
• Connecting Rod Side Clearance - Production Value	0.31-0.49 mm	0.0122-0.0193 in

Application	Specification	
	Metric	English
Crankshaft		
• Connecting Rod Journal Diameter - Service Limit	62.88 mm	2.4756 in
• Connecting Rod Journal Diameter - Production Value	62.902-62.922 mm	2.4764-2.4772 in
• Crankshaft End Play - Service Limit	0.54 mm	0.0213 in
• Crankshaft End Play - Production Value	0.04-0.205 mm	0.0016-0.0081 in
• Crankshaft Main Bearing Clearance - Service Limit	0.14 mm	0.0055 in
• Crankshaft Main Bearing Clearance - Production Value	0.039-0.070 mm	0.0015-0.0028 in
• Crankshaft Main Journal Diameter - Service Limit	79.89 mm	3.1453 in
• Crankshaft Main Journal Diameter - Production Value	79.905-79.925 mm	3.1459-3.1466 in
• Crankshaft Runout - Service Limit	0.44 mm	0.0173 in
• Crankshaft Runout - Production Value	0.05 mm	0.0020 in
Cylinder Head		
• Surface Flatness - Block Deck - Service Limit	0.2 mm	0.0079 in
• Surface Flatness - Block Deck - Production Value	0.075 mm	0.0030 in
• Surface Flatness - Exhaust Manifold Deck - Production Value	0.1 mm	0.0039 in
• Surface Flatness - Intake Manifold Deck - Production Value	0.1 mm	0.0039 in
Exhaust Manifold		
• Surface Flatness- Production Value	0.3 mm	0.0118 in
Intake Manifold		
• Surface Flatness - Production Value	0.3 mm	0.0118 in
Lubrication System		
• Oil Capacity - with Filter	10 qt	9.5 L
• Oil Capacity - without Filter	9.2 qt	8.7 L
• Oil Pressure - Minimum- Hot - at idle	98 KPa	14 psi
• Oil Pressure - Minimum - 1800 RPM	294 KPa	42 psi
• Oil Relief Valve Opening Pressure	441 KPa	64 psi
• Piston Cooling Jet Valve Opening Pressure	196 KPa	29 psi
Oil Pump		
• Gear Shaft Outside Diameter - Drive - Service Limit	19.86 mm	0.7819 in
• Gear Shaft Outside Diameter - Drive - Production Value	19.947-19.960 mm	0.7853-0.7858 in
• Gear Shaft Outside Diameter - Driven - Service Limit	19.86 mm	0.7819 in
• Gear Shaft Outside Diameter - Driven - Production Value	19.947-19.960 mm	0.7853-0.7858 in
• Gear Shaft-to-Bushing - Service Limit Clearance	0.14 mm	0.0055 in
• Gear-to-Cover Clearance - Drive/Driven - Service Limit	0.109 mm	0.0043 in
• Gear-to-Cover Clearance - Drive/Driven - Production Value	0.064-0.109 mm	0.0025-0.0043 in
• Gear-to-Housing Clearance - Drive/Driven - Service Limit	0.22 mm	0.0087 in
• Gear-to-Housing Clearance - Drive/Driven - Production Value	0.125-0.221 mm	0.0049-0.0087 in

Application	Specification	
	Metric	English
Piston Rings		
• Piston Ring End Gap-First Compression Ring - Service Limit	1.37 mm	0.0539 in
• Piston Ring End Gap-First Compression Ring - Production Value	0.3-0.45 mm	0.0118-0.0177 in
• Piston Ring End Gap-Second Compression Ring - Service Limit	1.35 mm	0.0531 in
• Piston Ring End Gap-Second Compression Ring - Production Value	0.50-0.65 mm	0.0197-0.0256 in
• Piston Ring End Gap-Oil Control Ring - Service Limit	1.20 mm	0.0472 in
• Piston Ring End Gap-Oil Control Ring - Production Value	0.15-0.35 mm	0.0059-0.0138 in
• Piston Ring to Groove Clearance-First Compression Ring - Service Limit	0.26 mm	0.0102 in
• Piston Ring to Groove Clearance-First Compression Ring - Production Value	0.08-0.17 mm	0.0030-0.0067 in
• Piston Ring to Groove Clearance-Second Compression Ring - Service Limit	0.10 mm	0.0039 in
• Piston Ring to Groove Clearance-Second Compression Ring - Production Value	0.01-0.03 mm	0.0004-0.0012 in
• Piston Ring to Groove Clearance-Oil Control Ring - Service Limit	0.12 mm	0.0047 in
• Piston Ring to Groove Clearance-Oil Control Ring - Production Value	0.01-0.03 mm	0.0004-0.0012 in
Pistons and Pins		
• Piston-Piston Diameter	102.948-102.960 mm	4.0531-4.0535 in
• Piston-Piston Pin Bore Diameter	34.504-34.512 mm	1.3584-1.3587 in
• Pin-Piston Pin Clearance to Piston Pin Bore - Service Limit	0.017 mm	0.0007 in
• Pin-Piston Pin Clearance to Piston Pin Bore - Production Value	0.004-0.017 mm	0.0002-0.0007 in
• Pin-Piston Pin Diameter - Service Limit	34.45 mm	1.3563 in
• Pin-Piston Pin Diameter - Production Value	34.495-34.5 mm	1.3581-1.3583 in
Starter		
• Rated Output	3.5 KW	
Valve System		
• Valves-Valve Face Angle - Production Value	45 degrees	
• Valves-Valve Face Width - Service Limit	2.5 mm	0.0984 in
• Valves-Valve Face Width - Production Value	2.1 mm	0.0827 in
• Valves-Valve Head Diameter - Exhaust	31.0 mm	1.22 in
• Valves-Valve Head Diameter - Intake	33.0 mm	1.30 in
• Valves-Valve Seat Angle	45 degrees	
• Valves-Valve Stem Diameter	7.0 mm	0.28 in
• Valves-Valve Stem Oil Seal Installed Height	6.05 mm	0.2382 in
• Valves-Valve Stem-to-Guide Clearance - Service Limit	0.20 mm	0.0079 in
• Valves-Valve Stem-to-Guide Clearance - Exhaust - Production Value	0.038-0.071 mm	0.0015-0.0028 in

Application	Specification	
	Metric	English
• Valves-Valve Stem-to-Guide Clearance - Intake - Production Value	0.030-0.063 mm	0.0012-0.0025 in
• Valves-Valve Stem-to-Guide Clearance	0.20 mm	0.0079 in
• Valve Lifters/Push Rods-Push Rod Straightness	0.8 mm	0.0315 in
• Rocker Arms-Valve Rocker Arm Bore Diameter	22.010-22.035 mm	0.8665-0.8675 in
• Rocker Arms-Valve Rocker Arm Bore-to-Shaft Clearance - Service Limit	0.20 mm	0.0079 in
• Rocker Arms-Valve Rocker Arm Bore-to-Shaft Clearance - Production Value	0.010-0.056 mm	0.0004-0.0022 in
• Rocker Arms-Valve Rocker Arm Ratio - Exhaust	1.69:1	
• Rocker Arms-Valve Rocker Arm Ratio - Intake	1.36:1	
• Rocker Arms-Valve Rocker Arm Shaft Diameter - Service Limit	21.85 mm	0.8602 in
• Rocker Arms-Valve Rocker Arm Shaft Diameter - Production Value	21.979-22.000 mm	0.8653-0.8661 in
• Valve Springs-Valve Spring Free Length - Production Value	56.6 mm	2.2283 in
• Valve Springs-Valve Spring Installed Height - Production Value	41 mm	1.6142 in
• Valve Springs-Valve Spring Load - Exhaust - Service Limit	275 N at 41 mm	61.8 lb at 1.61 in
• Valve Springs-Valve Spring load - Exhaust - Production Value	315-363 N at 41 mm	71-81.6 lb at 1.61 in
• Valve Springs-Valve Spring Load - Intake - Service Limit	306 N at 41 mm	68.8 lb at 1.61 in
• Valve Springs-Valve Spring Load - Intake - Production Value	315-363 N at 41 mm	71-81.6 lb at 1.61 in

Fastener Tightening Specifications

Application	Specification	
	Metric	English
A/C Compressor Bolt	50 N·m	37 lb ft
Air Cleaner Outlet Duct Clamp	8 N·m	71 lb in
Air Conditioning Compressor/Power Steering Pump Bracket Bolt	46 N·m	34 lb ft
Air Inlet Tube Nut	25 N·m	18 lb ft
Battery Cable Bracket Bolt	12 N·m	106 lb in
Battery Cable Bracket Nut	8 N·m	71 lb in
Bypass Pipe Bolt	25 N·m	18 lb ft
Camshaft Gear Bolt	234 N·m	173 lb ft
Camshaft Position Sensor Bolt	10 N·m	89 lb in
Camshaft Position Sensor Exciter Ring Bolt	9 N·m	80 lb in
Camshaft Thrust Plate Bolt	22 N·m	16 lb ft
Charged Air Cooler Bolt	21 N·m	15 lb ft
Charged Air Cooler Clamp	8 N·m	71 lb in
Connecting Rod Cap Bolt - Angular Tightening Method	1st Step 64 N·m	1st Step 47 lb ft
	2nd Step 30 degrees	2nd Step 30 degrees
	3rd Step 30 degrees	3rd Step 30 degrees
Coolant Pipe Bolt and Nut	25 N·m	18 lb ft
Coolant Tube to Water Pump Nut	25 N·m	18 lb ft
Cooling Fan Pulley	41 N·m	30 lb ft

Application	Specification	
	Metric	English
Crankshaft Balancer Bolt	1st Step 100 N·m	1st Step 74 lb ft
	2nd Step 105 degrees	2nd Step 105 degrees
Crankshaft Bearing Cap Bolt	1st Step 98 N·m	1st Step 72 lb ft
	2nd Step 132 N·m	2nd Step 97 lb ft
	3rd Step 30 degrees	3rd Step 30 degrees
Crankshaft Bearing Cap Bolt - Angular Tightening Method	1st Step 100 N·m	1st Step 74 lb ft
	2nd Step 90 degrees	2nd Step 90 degrees
Crankshaft Bearing Cap Side Bolt	70 N·m	52 lb ft
Crankshaft Position Sensor Bolt	10 N·m	89 lb in
Crankshaft Position Sensor Spacer Bolt	10 N·m	89 lb in
Crossmember Bolt	100 N·m	74 lb ft
Cylinder Head M12 Bolt - Angular Tightening Method	1st Step 50 N·m	1st Step 37 lb ft
	2nd Step 80 N·m	2nd Step 59 lb ft
	3rd Step 60 degrees	
	4th Step 60 degrees	
Cylinder Head M8 Bolt	25 N·m	18 lb ft
Drive Belt Tensioner Pulley Bolt	50 N·m	37 lb ft
EGR to EGR Cooler Bolt	25 N·m	18 lb ft
EGR Bracket	25 N·m	18 lb ft
EGR Bracket Bolt	25 N·m	18 lb ft
EGR Bracket to Cooler Bolt	25 N·m	18 lb ft
Electrical Harness Bracket Bolt	10 N·m	89 lb in
Engine Block Coolant Plug	18 N·m	13 lb ft
Engine Block Ground Bolt	34 N·m	25 lb ft
Engine Mount Through Bolt to Frame	75 N·m	55 lb ft
Engine Mount to Block Bolts	58 N·m	43 lb ft
Engine Mount to Frame Bolt	65 N·m	48 lb ft
Engine Shield Bolt	20 N·m	15 lb ft
Exhaust Heat Shield Nut	10 N·m	89 lb in
Exhaust Manifold Bolt/Nut	38 N·m	28 lb ft
Exhaust Manifold Heat Shield Bolts	10 N·m	89 lb in
Exhaust Outlet Clamp	15 N·m	11 lb ft
Exhaust Outlet Heat Shield Bolts	10 N·m	89 lb in
Exhaust Pipe Bracket Nut	53 N·m	39 lb ft
Exhaust Pipe Clamp	53 N·m	39 lb ft
Exhaust Pipe Heat Shield Bolts	10 N·m	89 lb in
Fan Pulley Bracket Bolt	50 N·m	37 lb ft
Flywheel Bolt - Angular Tightening Method	1st Step 79 N·m	1st Step 58 lb ft
	2nd Step 60 degrees	2nd Step 60 degrees
	3rd Step 60 degrees	3rd Step 60 degrees
Flywheel Housing Bolt	80 N·m	60 lb ft
Flywheel Housing to Upper Oil Pan Bolt	50 N·m	37 lb ft
Front Engine Cover Bolt	25 N·m	18 lb ft
Fuel Filter Bracket Bolt	30 N·m	22 lb ft
Fuel Injection Pipe Nut	41 N·m	30 lb ft
Fuel Injector Bracket Bolt	30 N·m	22 lb ft
Fuel Inlet Pipe Bracket Bolt	21 N·m	15 lb ft
Fuel Injection Pump Assembly to Cylinder Block Bolt	25 N·m	18 lb ft
Fuel Injection Pump to Bracket Bolt	28 N·m	20 lb ft
Fuel Injection Pump Drive Gear Nut	70 N·m	52 lb ft
Fuel Line Bracket Nut	21 N·m	15 lb ft

Application	Specification	
	Metric	English
Fuel Temperature Sensor	22 N·m	16 lb ft
Fuel Pipes Bracket Bolt	25 N·m	18 lb ft
Fuel Pressure Relief Valve	100 N·m	74 lb ft
Fuel Rail Assembly Bolt	25 N·m	18 lb ft
Fuel Rail Balance Pipe Bolt	21 N·m	15 lb ft
Generator Bracket Bolt and Nut	50 N·m	37 lb ft
Generator Positive Cable Nut	9 N·m	80 lb in
Glow Plug	18 N·m	13 lb ft
Glow Plug Controller Bolt	10 N·m	89 lb in
Glow Plug Harness Bracket Bolt	10 N·m	89 lb in
Glow Plug Nut	2 N·m	18 lb in
Glow Plug Power Feed Nut	15 N·m	11 lb ft
Glow Plug Relay Assembly Bolt	10 N·m	89 lb in
Heater Outlet Pipe Bolt	25 N·m	18 lb ft
Heater Pipe Bolt	25 N·m	18 lb ft
Hood Hinge Bolt	25 N·m	18 lb ft
Idle Pulley Bolt	50 N·m	37 lb ft
Injector Bracket Bolt	23 N·m	16 lb ft
Intake Manifold Bolts/Nuts	25 N·m	18 lb ft
Oil Cooler Adapter Bolts	25 N·m	18 lb ft
Oil Cooler Adapter Nuts	25 N·m	18 lb ft
Oil Cooler Assembly Bolts	25 N·m	18 lb ft
Oil Cooler Adapter Stud	10 N·m	89 lb in
Oil Drain Plug	84 N·m	62 lb ft
Oil Fill Tube Bolt	25 N·m	18 lb ft
Oil Filter	24 N·m	18 lb ft
Oil Gallery Plugs	53 N·m	39 lb ft
Oil Level Indicator Tube Bolt	21 N·m	15 lb ft
Oil Level Sensor Bolt	10 N·m	89 lb in
Oil Level Sensor Harness Bolt	40 N·m	29 lb ft
Oil Pan Bolts/Nuts - Lower	10 N·m	89 lb in
Oil Pan Bolt - Upper	20 N·m	15 lb ft
Oil Pan Skid Plate Bolt	20 N·m	15 lb ft
Oil Pressure Sensor Unit	41 N·m	30 lb ft
Oil Pressure Relief Valve	39 N·m	29 lb ft
Oil Pump Bolt	21 N·m	15 lb ft
Oil Pump Driven Gear Nut	100 N·m	74 lb ft
Oil Pump Gear Cover Bolt	21 N·m	15 lb ft
Oil Pump Pipe and Screen Assembly Bolts and Nuts	25 N·m	18 lb ft
Piston Cooling Nozzle Eye Bolt	21 N·m	15 lb ft
Positive Cable Junction Block Bracket to Power Steering Pump Bolt	9 N·m	80 lb in
Positive Crankcase Ventilation Cover Screws	4 N·m	35 lb in
Positive Crankcase Ventilation Oil Separator Bracket Nut	25 N·m	18 lb ft
Power Steering Pump Bracket Bolt	50 N·m	37 lb ft
Power Steering Pump Bolt	50 N·m	37 lb ft
Rocker Arm Shaft Bracket Bolt	41 N·m	30 lb ft
Starter Motor Bolt	78 N·m	58 lb ft
Transmission Fill Tube Nut	18 N·m	13 lb ft
Thermostat Housing Bolts/Nuts	25 N·m	18 lb ft
Thermostat Cover Bolt	25 N·m	18 lb ft
Torque Converter Bolt	60 N·m	44 lb ft

Application	Specification	
	Metric	English
Transmission Oil Cooler Clip Nut	9 N·m	80 lb in
Turbocharger Bolt	108 N·m	80 lb ft
Turbocharger Coolant Outlet Pipe Bracket Nut	10 N·m	89 lb in
Turbocharger Heat Shield Bolts	10 N·m	89 lb in
Turbocharger Oil Return Pipe Stud	10 N·m	89 lb in
Turbocharger Oil Supply Hose Eye Bolt	26 N·m	19 lb ft
Turbocharger Oil Return Pipe Bolts/Nuts	25 N·m	18 lb ft
Upper Oil Pan to Flywheel Housing Bolts	20 N·m	15 lb ft
Valve Adjusting Nut	22 N·m	16 lb ft
Valve Lifter Holdown Bracket Bolt	11 N·m	97 lb in
Valve Rocker Arm Cover Bolt - Lower	10 N·m	89 lb in
Valve Rocker Arm Cover Bolt - Upper	8 N·m (Two Times)	71 lb in (Two Times)
Water Outlet Bolts	25 N·m	18 lb ft
Water Pump Bolt	25 N·m	18 lb ft
Water Pump Inlet Pipe Bolts	25 N·m	18 lb ft

Drive Belt System Description

See Drive Belt System Description above.

Engine Component Description

The engine block utilizes a deep skirt design for increased rigidity. The cylinders are positioned in a 90 degree "V" orientation with the number one cylinder being the right front. The block is induction hardened for increased durability. The crankshaft bearing caps are cross-bolted to enhance structural rigidity.

Upper Oil Pan

A single piece cast aluminum upper oil pan contributes to crankshaft and block rigidity while reducing overall weight.

Crankshaft

The crankshaft is a nitride hardened steel design with five main bearings. Crankshaft thrust is controlled by the number 5 bearing.

Connecting Rods

The connecting rods are one-piece hot forged steel. The connecting rods and caps are of a fractured split design to improve durability and reduce internal friction. The connecting rod small end is tapered cut for reduced weight and improved durability.

Pistons

The pistons are a full-floating design. The piston pins are a slip fit in the bronze bushed connecting rod and are retained in the piston by round wire retainers. The pistons have a piston cooling oil channel cast inside of the piston. These cooling oil channels utilize an oil jet located at the bottom of the cylinder bore to direct oil into the piston channel. There are two compression rings and one oil control ring. There is a groove machined into the pistons between the first and second compression rings. This groove reduces compression ring leakage by providing an empty space for expanding gases, reducing the combustion gas pressure on the second compression ring.

Cylinder Heads

The cylinder heads are made of aluminum for lighter weight and rapid heat dissipation. There are 4 valves per cylinder and the ports are of a high swirl design for improved combustion. The cylinder head gaskets consist of an all steel laminated construction.

Valve Train

The engine utilizes a mechanical roller lifter for valve operation. The shaft mounted rocker arms have roller tips for reduced friction and wear. One rocker arm operates two valves simultaneously through a valve bridge.

Fuel System

The fuel system is of a direct injection fuel rail design. A high pressure pump mounted within the valley is gear driven directly from the camshaft. This pump provides a continuous and constant high pressure fuel supply to the fuel rails. The electronically controlled fuel injectors receive their fuel supply from these fuel rails. The fuel injection control utilizes a pilot injection method to reduce the combustion noise that is common in traditional diesel engines. The pilot injection method reduces noise by supplying a small amount of fuel to the cylinder just before the normal combustion timing.

Fuel Injection Control Module

The fuel injection control module is mounted on the right front valve rocker arm cover. It is fuel cooled.

Turbocharger

The turbocharger is water cooled for improved durability.

Oil Cooler

The oil cooler lowers engine temperature by cooling the oil with engine coolant. Engine coolant is directed from the water pump to the oil cooler by a coolant tube. The oil filter attaches directly to the oil cooler.

Oil Pump

The oil pump is gear driven directly from the crankshaft. The oil pump drive gear is a slip fit to the crankshaft.

Water Pump

The water pump is gear driven for improved reliability.

Engine Covers

There is a front engine cover and a flywheel housing, both are made of aluminum. The full bell flywheel housing is cross bolted to the upper oil pan. The flywheel housing also supplies a crossover passage for engine coolant. The front engine cover houses the gear train and provides a mounting surface for the cooling fan pulley assembly.

Lubrication Description

Lubrication Flow Schematic

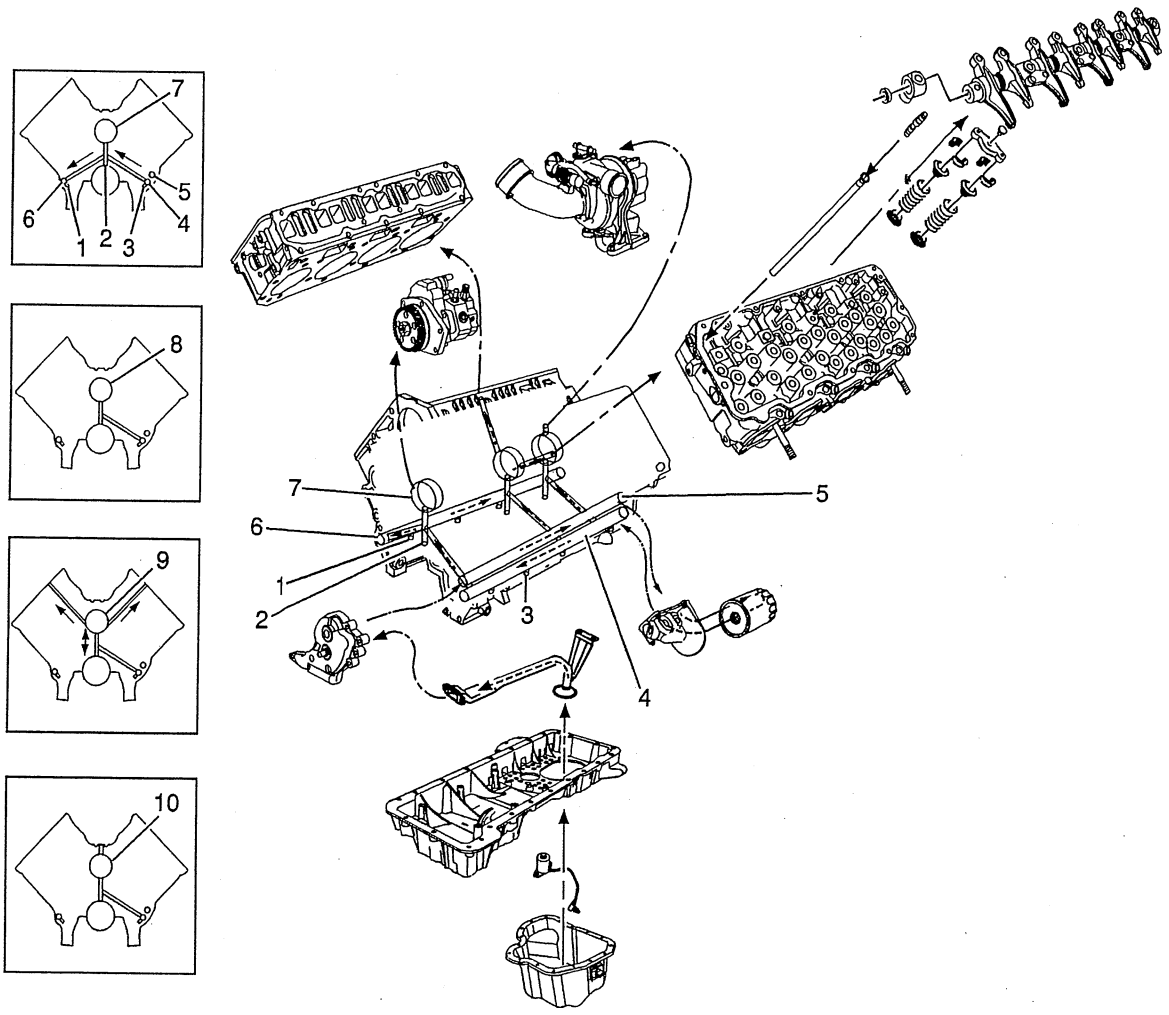

Engine lubrication is supplied by a gear type oil pump assembly. The pump is mounted on the front of the engine block and driven by the oil pump drive gear on the crankshaft. The pump gears rotate and draw oil from the oil pan sump through a pick-up screen and pipe. The oil is pressurized as it passes through the pump and is sent through the engine block oil galleries. Contained within the oil pump assembly is a safety relief valve that eliminates overpressurization. Pressurized oil is directed through the sub oil gallery (5) to the full flow oil filter where harmful contaminants are removed. Two bypass valves are incorporated into the oil cooler assembly which will permit oil flow in the event the filter or the oil cooler become restricted.

The oil is directed to the main oil gallery (4), and from the main oil gallery it flows to the piston cooling channel left bank (3), and the sub oil gallery (6) on the right bank. The sub oil gallery on the right bank supplies oil to the right bank piston cooling channel (1). Located in the front cover at the sub oil gallery (6) is an oil pressure relief valve which regulates oil pressure within operating range.

Oil flows from the main gallery (4) to the vertical crankshaft/camshaft bearing galleries (2). From the crankshaft/camshaft bearing galleries (2), the oil flows to both the camshaft bearings and the crankshaft main bearings. Oil flows from the crankshaft main bearings to the connecting rod big end.

Oil flows from the crankshaft/camshaft bearing galleries (2) to the number 1 camshaft bearing (7), where it splash lubricates the fuel injection pump gear.

Oil flows from the crankshaft/camshaft bearing galleries (2) to the number 2 and 5 camshaft bearings (8).

Oil flows from the crankshaft/camshaft bearing galleries (2) to the number 3 camshaft bearing (9), where it exits to both cylinder heads and enters the hollow rocker arm shafts. Oil flows through the rocker arm shafts and rocker arms where it lubricates the upper valve train components. Oil also flows through the rocker arms, through the passage in the valve adjusting screw, and into the hollow pushrods where it is directed to the valve lifters.

Oil flows from the crankshaft/camshaft bearing galleries (2) to the number 4 camshaft (10), where it exits into the turbocharger oil supply line to lubricate the turbocharger. Oil exiting the turbocharger is routed through the turbocharger oil return pipe and into the flywheel housing.

Crankcase Ventilation System Description

A crankcase ventilation system is used in order to provide a more complete scavenging of crankcase vapors. The air cleaner supplies fresh air through a filter to the crankcase. The crankcase mixes the fresh air with blow-by gases. This mixture then passes through a crankcase depression regulator valve into the intake manifold.

The primary control is through the crankcase depression regulator valve, which meters the flow at a rate depending on the crankcase pressure.

In order to maintain an idle quality, the crankcase depression regulator valve restricts the flow when the crankcase pressure is high. If abnormal operating conditions arise, the system is designed in order to allow the excessive amounts of blow-by gases to back flow through the crankcase vent tube into the air cleaner in order to be consumed by normal combustion.

Engine Mechanical – 8.1L (RPO L18 VIN G)

General Specifications

Application	Specification	
	Metric	English
General		
• Engine Type	V8	
• Displacement	8.1L	496 CID
• RPO	L18	
• VIN - Light Duty	G	
• VIN - Medium Duty	G	
• Bore	107.95 mm	4.25 in
• Stroke	111.0 mm	4.37 in
• Compression Ratio	9.1:1	
• Firing Order	1-8-7-2-6-5-4-3	
• Spark Plug Gap	1.52 mm	0.06 in
Block		
• Crankshaft Main Bearing Bore Diameter	74.606-74.622 mm	2.9372-2.9379 in
• Cylinder Bore Diameter - Production	107.95-107.968 mm	4.25-4.2507 in
• Cylinder Bore Diameter - Service	107.94-107.99 mm	4.2496-4.2516 in
• Cylinder Bore Out-of-Round - Production, Maximum Minus Minimum Bore Diameter	0.018 mm	0.0007 in
• Cylinder Bore Out-of-Round - Service, Maximum Minus Minimum Bore Diameter	0.05 mm	0.002 in
• Cylinder Bore Taper - Production	0.018 mm	0.0007 in
• Cylinder Bore Taper - Service Thrust Axis	0.05 mm	0.002 in
• Cylinder Bore Taper - Service Pin Axis	0.05 mm	0.002 in
• Cylinder Head Deck Height - from Centerline of Crankshaft	259.875-260.125 mm	10.231-10.241 in
• Cylinder Head Deck Surface Flatness - Entire Face	0.1 mm	0.004 in
• Cylinder Head Deck Surface Flatness - Within 150 mm (6 in)	0.05 mm	0.002 in
• Valve Lifter Bore Diameter	21.417-21.443 mm	0.843-0.844 in
Camshaft		
• Camshaft Bearing Inside Diameter	49.548-49.573 mm	1.9507-1.9517 in
• Camshaft Journal Diameter	49.472-49.522 mm	1.9477-1.9497 in
• Camshaft Lobe Lift - Exhaust	6.973-7.075 mm	0.2745-0.2785 in
• Camshaft Lobe Lift - Intake	6.924-7.026 mm	0.2726-0.2766 in
• Camshaft Runout - Production	0.051 mm	0.002 in
• Camshaft Runout - Service	0.076 mm	0.003 in
Connecting Rod		
• Connecting Rod Bearing Clearance - Production	0.033-0.068 mm	0.0013-0.0027 in
• Connecting Rod Bearing Clearance - Service	0.033-0.081 mm	0.0013-0.0032 in
• Connecting Rod Side Clearance	0.384-0.686 mm	0.0151-0.027 in
Crankshaft		
• Connecting Rod Journal Diameter	55.854-55.87 mm	2.199-2.1996 in
• Connecting Rod Journal Out-of-Round - Production	0.0102 mm	0.0004 in
• Connecting Rod Journal Taper - Production	0.0102 mm	0.0004 in
• Crankshaft End Play	0.127-0.35 mm	0.005-0.0138 in

Application	Specification	
	Metric	English
• Crankshaft Main Bearing Clearance - #1, #2, #3, #4 Production	0.022-0.057 mm	0.0008-0.0022 in
• Crankshaft Main Bearing Clearance - #5 Production	0.034-0.069 mm	0.0013-0.0027 in
• Crankshaft Main Bearing Clearance - #1, #2, #3, #4 Service	0.022-0.089 mm	0.0008-0.0035 in
• Crankshaft Main Bearing Clearance - #5 Service Limit	0.035-0.102 mm	0.0014-0.004 in
• Crankshaft Main Journal Diameter	69.805-69.822 mm	2.7482-2.7489 in
• Crankshaft Main Journal Out-of-Round - Production	0.0102 mm	0.0004 in
• Crankshaft Main Journal Taper - Production	0.0102 mm	0.0004 in
• Crankshaft Runout - Production	0.05 mm	0.002 in
• Crankshaft Runout - Service	0.065 mm	0.0026 in
Cylinder Head		
• Cylinder Head Height/Thickness	259.875-260.125 mm	10.231-10.241 in
• Surface Flatness - Block Deck	0.05 mm	0.002 in
• Surface Flatness - Exhaust Manifold Deck	0.102 mm	0.004 in
• Surface Flatness - Intake Manifold Deck	0.08 mm	0.003 in
Exhaust Manifold		
• Surface Flatness	0.254 mm	0.01 in
Lubrication System		
• Oil Capacity - Without Filter	5.7L	6.0 Qts
• Oil Capacity - With Filter	6.15L	6.5 Qts
• Oil Pressure - Minimum	34 kPa @ 1,000 RPM	5 psi @ 1,000 RPM
• Oil Pressure - Minimum	69 kPa @ 2,000 RPM	10 psi @ 2,000 RPM
Piston Rings		
Piston Ring End Gap		
• First Compression Ring - Production	0.3-0.45 mm	0.012-0.018 in
• First Compression Ring - Service	0.45-0.675 mm	0.018-0.027 in
• Second Compression Ring - Production	0.45-0.65 mm	0.017-0.025 in
• Second Compression Ring - Service	0.675-0.975 mm	0.026-0.039 in
• Oil Control Ring - Production	0.249-0.759 mm	0.0098-0.0299 in
• Oil Control Ring - Service	0.373-1.138 mm	0.015-0.045 in
Piston Ring-to-Groove Clearance		
• First Compression Ring	0.031-0.074 mm	0.0012-0.0029 in
• Second Compression Ring	0.031-0.074 mm	0.0012-0.0029 in
• Oil Control Ring	0.051-0.203 mm	0.002-0.008 in
Piston and Pins		
Piston		
• Piston Diameter	Not Measurable	Not Measurable
• Piston-to-Bore Clearance	Interference Fit	Interference Fit
Pin		
• Pin-Piston Pin Fit in Connecting Rod Bore-Production	0.010-0.023 mm	0.0004-0.0009 in
• Pin-Piston Pin Fit in Connecting Rod Bore-Service	0.010-0.023 mm	0.0004-0.0009 in

Application	Specification	
	Metric	English
• Pin-Piston Pin Clearance-to-Piston Pin Bore-Production	0.003-0.011 mm	0.00019-0.00043 in
• Pin-Piston Pin Clearance-to-Piston Pin Bore-Service	0.003-0.011 mm	0.00019-0.00043 in
• Pin-Piston Pin Diameter	26.416-26.419 mm	1.039-1.040 in
Valve System		
Valves		
• Valve Face Angle - Exhaust	45 degrees	
• Valve Face Angle - Intake	45 degrees	
• Valve Head Diameter - Exhaust	43.69 mm	1.72 in
• Valve Head Diameter - Intake	55.63 mm	2.19 in
• Valve Lash - Exhaust	Net Lash	Net Lash
• Valve Lash - Intake	Net Lash	Net Lash
• Valve Seat Angle - Exhaust	46 degrees	
• Valve Seat Angle - Intake	46 degrees	
• Valve Seat Runout - Exhaust	0.05 mm	0.002 in
• Valve Seat Runout - Intake	0.05 mm	0.002 in
• Valve Seat Width - Exhaust	1.651-2.159 mm	0.060-0.095 in
• Valve Seat Width - Intake	0.8-1.2 mm	0.03-0.06 in
• Valve Stem Diameter - Exhaust	9.431-9.449 mm	0.3713-0.372 in
• Valve Stem Diameter - Intake	9.436-9.454 mm	0.3715-0.3722 in
• Valve Stem-to-Guide Clearance - Exhaust - Production	0.03-0.079 mm	0.0012-0.0031 in
• Valve Stem-to-Guide Clearance - Intake - Production	0.025-0.074 mm	0.001-0.0029 in
• Valve Stem-to-Guide Clearance - Exhaust - Service	0.03-0.104 mm	0.0012-0.0041 in
• Valve Stem-to-Guide Clearance - Intake - Service	0.025-0.099 mm	0.001-0.0039 in
Rocker Arms		
• Valve Rocker Arm Ratio	1.7:1	
Valve Springs		
• Valve Spring Free Length	56.35 mm	2.218 in
• Valve Spring Installed Height	45.92-46.69 mm	1.808-1.838 in
• Valve Spring Load - Closed	381-419 N at 45.92 mm	86-94 lb at 1.808 in
• Valve Spring Load - Open	964-1056 N at 33.99 mm	216-236 lb at 1.338 in

Fastener Tightening Specifications

Application	Specification	
	Metric	English
Air Cleaner Outlet Duct Clamp	4 N·m	35 lb in
Air Conditioning (A/C) Belt Tensioner Bolt	50 N·m	37 lb ft
Battery Cable Channel Bolt	9 N·m	80 lb in
Camshaft Position (CMP) Sensor Bolt	12 N·m	106 lb in
Camshaft Retainer Bolt	12 N·m	106 lb in
Camshaft Sprocket Bolt	30 N·m	22 lb ft
Connecting Rod Nut - First Pass	30 N·m	22 lb ft
Connecting Rod Nut - Final Pass	90 degrees	
Crankshaft Balancer Bolt	255 N·m	189 lb ft
Crankshaft Bearing Cap Bolts - First Pass	30 N·m	22 lb ft
Crankshaft Bearing Cap Bolts - Final Pass	90 degrees	
Crankshaft Bearing Cap Studs - First Pass	30 N·m	22 lb ft
Crankshaft Bearing Cap Studs - Final Pass	80 degrees	
Crankshaft Oil Deflector Nut	50 N·m	37 lb ft
Crankshaft Position (CKP) Sensor Bolt	12 N·m	106 lb in
Crossbar Bolt	100 N·m	74 lb ft
Cylinder Head Bolts - In Sequence		
• First Pass	30 N·m	22 lb ft
• Second Pass	30 N·m + 120 degrees	22 lb ft + 120 degrees
• Final Pass - Long Bolts #1, 2, 3, 6, 7, 8, 9, 10, 11, 14, 16, 17	60 degrees	
• Final Pass - Medium Bolts #15, 18	45 degrees	
• Final Pass - Short Bolts #4, 5, 12, 13	30 degrees	
Cylinder Head Coolant Hole Plug	50 N·m	37 lb ft
Drive Belt Idler Pulley Bolt	50 N·m	37 lb ft
Drive Belt Tensioner Bolt	50 N·m	37 lb ft
Engine Block Coolant Drain Hole M28 Plug - Left Front	60 N·m	44 lb ft
Engine Block Coolant Drain Hole Plug - Side	30 N·m	22 lb ft
Engine Block Coolant Heater	50 N·m	37 lb ft
Engine Block Oil Gallery Plug - Front	20 N·m	15 lb ft
Engine Block Oil Gallery Plug - Rear	30 N·m	22 lb ft
Engine Block Oil Gallery Plug - Side	30 N·m	22 lb ft
Engine Block Oil Gallery Plug - Top	20 N·m	15 lb ft
Engine Coolant Crossover Bolt	50 N·m	37 lb ft
Engine Coolant Temperature (ECT) Sensor	50 N·m	37 lb ft
Engine Coolant Temperature (ECT) Sensor Bracket Bolt	50 N·m	37 lb ft
Engine Harness Bolt	5 N·m	44 lb in
Engine Harness Ground Bolt	16 N·m	12 lb ft
Engine Harness Stud	10 N·m	89 lb in
Engine Lift Bracket Bolt	40 N·m	30 lb ft
Engine Mount-to-Engine Bolt	50 N·m	37 lb ft
Engine Mount Bracket Thru Bolt	75 N·m	55 lb ft
Engine Mount-to-Engine Mount Bracket Bolt	65 N·m	50 lb ft
Engine Shield Bolt	20 N·m	15 lb ft
Engine Sight Shield Bracket Nut	5 N·m	44 lb in
Engine Wiring Harness Bolt	16 N·m	12 lb ft
Evaporative Emission (EVAP) Canister Purge Solenoid Valve Bolt	8 N·m	71 lb in
Exhaust Gas Recirculation (EGR) Valve Opening Cover Nut	22 N·m	16 lb ft

Application	Specification	
	Metric	English
Exhaust Gas Recirculation (EGR) Valve Opening Cover Stud	7 N·m	62 lb in
Exhaust Manifold Center Bolt	35 N·m	26 lb ft
Exhaust Manifold Nut	16 N·m	12 lb ft
Exhaust Manifold Stud	20 N·m	15 lb ft
Exhaust Manifold Heat Shield Bolt	25 N·m	18 lb ft
Exhaust Manifold Heat Shield Nut	25 N·m	18 lb ft
Flywheel Bolt - First Pass	40 N·m	30 lb ft
Flywheel Bolt - Second Pass	80 N·m	59 lb ft
Flywheel Bolt - Final Pass	100 N·m	74 lb ft
Front Cover Bolt - First Pass	6 N·m	53 lb in
Front Cover Bolt - Final Pass	12 N·m	106 lb in
Fuel Rail Bolt/Stud	12 N·m	106 lb in
Heater Hose Bracket Bolt	50 N·m	37 lb ft
Hood Hinge Bolt	25 N·m	18 lb ft
Ignition Coil Bolt	12 N·m	106 lb in
Ignition Coil Wiring Harness Bolt	12 N·m	106 lb in
Intake Manifold Bolts - First Pass In Sequence	5 N·m	44 lb in
Intake Manifold Bolts - Second Pass In Sequence	8 N·m	71 lb in
Intake Manifold Bolts - Third Pass In Sequence	12 N·m	106 lb in
Intake Manifold Bolt - Final Pass In Sequence	15 N·m	11 lb ft
J 36857 Bolt	40 N·m	30 lb ft
J 42847 Bolt	50 N·m	37 lb ft
Knock Sensor	20 N·m	15 lb ft
Knock Sensor Heat Shield Bolt	12 N·m	106 lb in
Manifold Absolute Pressure (MAP) Sensor Bolt	12 N·m	106 lb in
Oil Cooler Hose Fittings	23 N·m	17 lb ft
Oil Fill Tube Bolt	12 N·m	106 lb in
Oil Filter	38 N·m	28 lb ft
Oil Filter Fitting	66 N·m	49 lb ft
Oil Level Indicator Tube Bolt	25 N·m	18 lb ft
Oil Level Sensor	20 N·m	15 lb ft
Oil Pan Bolt - First Pass	10 N·m	89 lb in
Oil Pan Bolt - Final Pass	25 N·m	18 lb ft
Oil Pan Drain Plug	28 N·m	21 lb ft
Oil Pan Skid Plate Bolt	20 N·m	15 lb ft
Oil Pressure Sensor	30 N·m	22 lb ft
Oil Pump Bolt	75 N·m	56 lb ft
Oil Pump Cover Bolt	12 N·m	106 lb in
Oil Pump Drive Bolt	25 N·m	18 lb ft
Power Steering Pump Bracket Bolt/Nut	50 N·m	37 lb ft
Power Steering Pump Bracket Stud	20 N·m	15 lb ft
Spark Plug	30 N·m	22 lb ft
Throttle Body Nut	10 N·m	89 lb in
Throttle Body Stud	12 N·m	106 lb in
Valve Lifter Guide Retainer Bolt	25 N·m	18 lb ft
Valve Rocker Arm Cover Bolt - First Pass	6 N·m	53 lb in
Valve Rocker Arm Cover Bolt - Final Pass	12 N·m	106 lb in
Valve Rocker Arm Nut	35 N·m	26 lb ft
Valve Rocker Arm Stud	50 N·m	37 lb ft
Water Outlet Bolt/Stud	30 N·m	22 lb ft
Water Pump Bolt - First Pass	25 N·m	18 lb ft

Application	Specification	
	Metric	English
Water Pump Bolt - Final Pass	50 N·m	37 lb ft
Water Pump Pulley Bolt	25 N·m	18 lb ft

Drive Belt System Description

See Drive Belt System Description above.

Engine Component Description

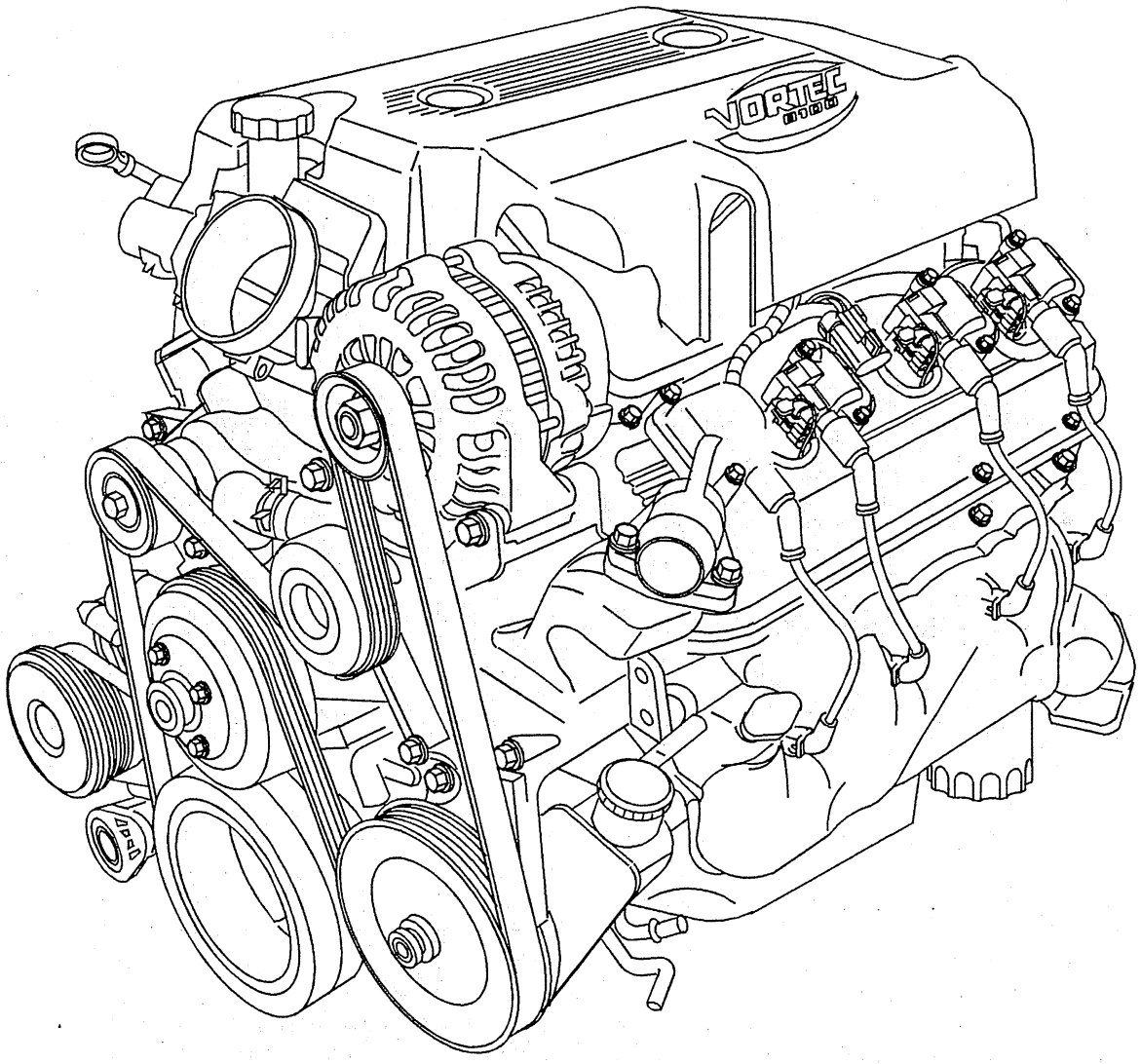

The engine block is made of cast iron and it has eight cylinders arranged in a V shape with four cylinders in each bank. The engine block is a one piece casting with the cylinders encircled by coolant jackets.

Cylinder Head

The cylinder heads are made of cast iron and have parent metal intake valve guides and intake valve seats. The cast iron exhaust valve guides and powdered metal valve seats are pressed into the exhaust ports. A spark plug is located between the valves in the side of the cylinder head. The water crossover pipe attaches to the front of each cylinder head.

Camshaft

A steel camshaft is supported by five bearings pressed into the engine block. The camshaft sprocket is mounted to the front of the camshaft and is driven by the crankshaft sprocket through a camshaft timing chain.

Motion from the camshaft is transmitted to the valves by hydraulic roller valve lifters, valve push rods, and ball-pivot type rocker arms. A spiral gear machined into the camshaft near the rear journal drives a shaft assembly which operates the oil pump driveshaft assembly. Ignition synchronization with the camshaft is provided by a physical feature integral with the camshaft sprocket.

Crankshaft

The crankshaft is made of cast nodular iron. The crankshaft is supported by five crankshaft bearings. The crankshaft bearings are retained by the crankshaft bearing caps. The crankshaft bearing caps are machined with the engine block for proper alignment and clearance. The crankshaft bearing caps are retained by two bolts and two studs each. The number five crankshaft bearing at the rear of the engine block is the end thrust bearing. The four connecting rod journals (two rods per journal) are spaced 90 degrees apart. The crankshaft position sensor reluctor ring is pushed onto the rear of the crankshaft. The crankshaft position sensor reluctor is constructed of powdered metal. The reluctor ring has an interference fit onto the crankshaft and an internal keyway for correct positioning.

Pistons and Connecting Rods

The pistons are cast aluminum alloy that use two compression rings and one oil control ring assembly. The piston pins are a floating fit in the pistons and the piston pins are retained by a press fit in the connecting rod assembly. The pistons are coated in order to create an interference fit into the cylinder. The connecting rods are forged steel and have precision insert type crankpin bearings. The piston and connecting rod is only serviced as an assembly.

Valve Train

The valve train is a ball pivot type. Motion is transmitted from the camshaft through the hydraulic roller valve lifters and tubular valve push rods to the valve rocker arms. The valve rocker arm pivots on a ball in order to open the valve. The hydraulic roller valve lifters keep all parts of the valve train in constant contact. Each valve lifter acts as an automatic adjuster and maintains zero lash in the valve train. This eliminates the need for periodic valve adjustment. The valve rocker arm stud and nut retains the valve rocker arm and ball seat. The valve rocker arm stud is threaded into the cylinder head. The valve stem seal is pressed over the valve guide of the cylinder head.

Intake Manifold

The intake manifold is a one-piece design. The intake manifold is made of cast aluminum. The throttle body is attached to the front of the intake manifold. A linear exhaust gas recirculation (EGR) port is cast into the manifold for exhaust gas recirculation mixture. The EGR valve bolts onto the rear of the intake manifold. The fuel rail assembly with eight separate fuel injectors is retained to the intake manifold by four studs. The fuel injectors are seated in their individual manifold bores with O-ring seals to provide sealing. A Manifold Absolute Pressure (MAP) sensor is mounted on the top of the intake manifold and sealed by an O-ring seal. The MAP sensor is held in place with a retainer bolt. The evaporative emission canister solenoid is located in the front of the intake manifold. The positive crankcase ventilation (PCV) system is internally cast into the intake manifold. There is not a PCV valve. A splash shield is installed under the intake manifold. The shield prevents hot oil from contacting the bottom of the intake manifold, maintaining air inlet charge density.

Exhaust Manifold

The two exhaust manifolds are constructed of cast stainless steel. The exhaust manifolds direct exhaust gases from the combustion chambers to the exhaust system. The right exhaust manifold has a flange for the EGR pipe.

Lubrication Description

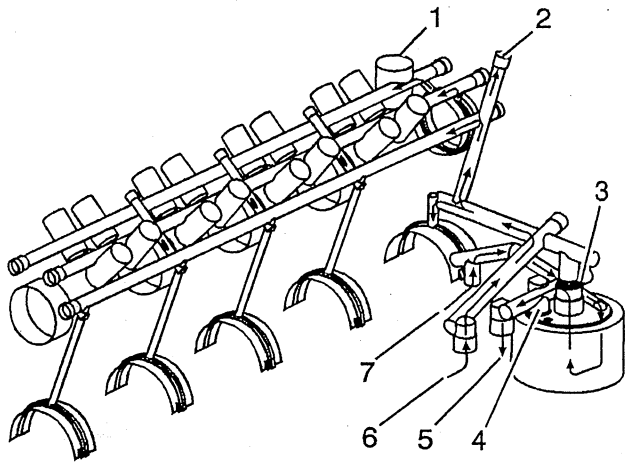

The gear-type oil pump is driven through an extension driveshaft. The extension driveshaft is driven by the oil pump drive, which is gear driven by the camshaft. The oil is drawn from the oil pan through a pickup screen and tube, into the oil pump (7). Pressurized oil flows through the oil filter, into the oil cooler (5), back into the engine (6), up to the oil pressure gage port (2) and rear crankshaft bearing, and is then distributed to the upper oil galleries. Oil must flow around the oil pump drive (1) in order to reach the right side valve lifters properly. The oil is delivered through internal passages in order to lubricate camshaft and crankshaft bearings and to provide lash control in the hydraulic valve lifters. Oil is metered from the valve lifters through the valve push rods in order to lubricate the valve rocker arms and ball pivots. Oil returning to the oil pan from the cylinder heads and the front camshaft bearing, lubricates the camshaft timing chain and the crankshaft and the camshaft sprockets. There are two bypass valves located in the engine block, above the oil filter. The oil filter bypass valve (4) and the oil cooler bypass valve (3).

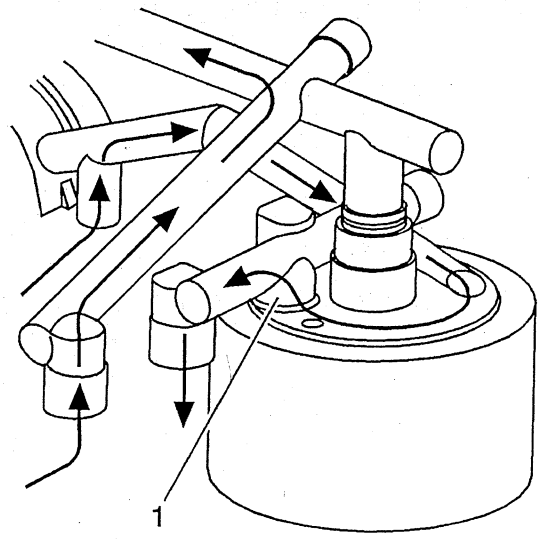

If the oil filter becomes plugged, the pressurized oil is diverted around the top of the oil filter. The oil filter bypass valve (1) is forced open, allowing the oil to continue on to the oil cooler and engine oil passages. No oil filtration occurs because the oil is not allowed into the oil filter.

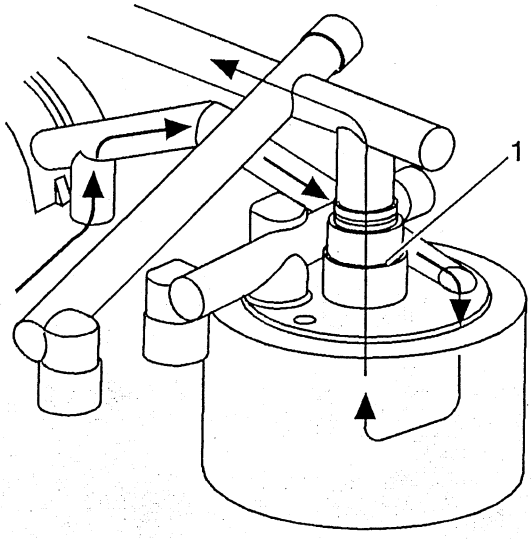

If the oil cooler flow becomes blocked, either from a plugged oil cooler or blocked or kinked oil cooler line, the oil cooler bypass valve (1) is forced open, allowing oil to flow directly into the engine oil passages. Oil does not flow into or out of the engine oil cooler.

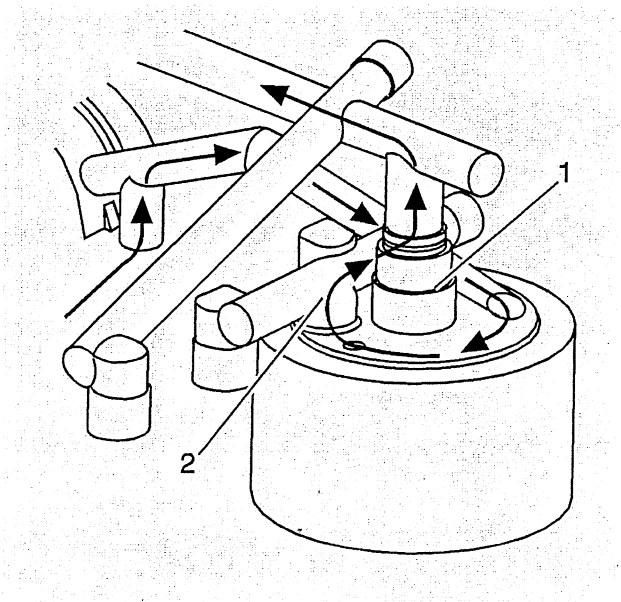

If both the oil filter and the oil cooler are plugged, the pressurized oil is routed around the top of the oil filter, through the oil filter bypass valve (2), through the oil cooler bypass valve (1) and directly into the engine oil passages. Lubrication still occurs, but the oil is not filtered or directed through the oil cooler.

Engine Cooling

Fastener Tightening Specifications

Application	Specification	
	Metric	English
Air Cleaner Outlet Duct Clamp	4 N·m	35 lb in
Air Conditioning (A/C) Compressor Bolt (6.6L)	50 N·m	37 lb ft
Air Inlet Tube Nut (6.6L)	25 N·m	18 lb ft
Auxiliary Water Pump Bracket Nut	9 N·m	80 lb in
Bypass Pipe to Water Pump Bolt (6.6L)	21 N·m	16 lb ft
Charged Air Cooler Duct Clamp (6.6L)	6 N·m	53 lb in
Coolant Air Bleed Pipe Cover Bolt (4.8L, 5.3L, and 6.0L)	12 N·m	106 lb in
Coolant Air Bleed Pipe Stud/Bolt (4.8L, 5.3L, and 6.0L)	12 N·m	106 lb in
Coolant Heater (4.8L, 5.3L, and 6.0L)	50 N·m	37 lb ft
Coolant Heater (8.1L)	60 N·m	47 lb ft
Coolant Heater Bolt (4.3L)	2 N·m	18 lb in
Coolant Heater Bolt (6.6L)	2 N·m	18 lb in
Coolant Heater Cord Bolt	8 N·m	71 lb in
Coolant Outlet Pipe Clip Bolt (6.6L)	9 N·m	80 lb in
Cooling Fan Motor Bolt	10 N·m	89 lb in
Engine Block Coolant Drain Plug	60 N·m	44 lb ft
Engine Shield Bolt	20 N·m	15 lb ft
Exhaust Gas Recirculation (EGR) Coolant Pipe Bolt (6.6L)	21 N·m	16 lb ft
Exhaust Manifold Pipe Nut (4.8L, 5.3L, and 6.0L)	50 N·m	37 lb ft
Fan Clutch Bolt	23 N·m	17 lb ft
Fan Clutch Nut	56 N·m	41 lb ft
Fan Pulley Bolt/Nut (6.6L)	46 N·m	34 lb ft
Fan Shroud Bolt	9 N·m	80 lb in
Fuel Line Bracket Bolt (6.6L)	21 N·m	15 lb ft
Fuel Line to Fuel Injection Control Module Bolt (6.6L)	35 N·m	26 lb ft
Generator Bracket Bolt (6.6L and 8.1L)	50 N·m	37 lb ft
Generator Bracket Stud (8.1L)	20 N·m	15 lb ft
Generator Positive Cable Nut (6.6L)	9 N·m	80 lb in
Heater Inlet Pipe to Fuel Filter Bolt (6.6L)	21 N·m	16 lb ft
Heater Inlet Pipe to Thermostat Bolt (6.6L)	21 N·m	16 lb ft
Heater Outlet Hose Bracket Bolt (6.6L)	21 N·m	16 lb ft
Hood Hinge Bolts	25 N·m	18 lb ft
Idler Pulley Bolt (6.6L)	43 N·m	32 lb ft
Intake Manifold Cover Clamp (6.6L)	6 N·m	53 lb in
Junction Block Bracket Bolt (6.6L)	9 N·m	80 lb in
Main Electrical Harness Bracket Bolt (6.6L)	21 N·m	15 lb ft
Main Engine Electrical Harness Connector Bolt (6.6L)	10 N·m	89 lb in
Oil Cooler Hose Adapter Bolt (6.0L)	12 N·m	106 lb in
Oil Cooler Hose Bracket Bolt (6.0L)	25 N·m	18 lb ft
Oil Cooler Hose Bracket Bolt (8.1L)	50 N·m	37 lb ft
Positive Crankcase Ventilation (PCV) Oil Separator Bracket Nut (6.6L)	21 N·m	16 lb ft
Power Steering Pump Bracket Bolt (6.6L)	46 N·m	34 lb ft
Radiator Bolt	25 N·m	18 lb ft
Starter/Generator Control Module (SGCM) Brace Bolts	25 N·m	18 lb ft
Starter/Generator Control Module (SGCM) Coolant Pump Bolts	9 N·m	80 lb in
Starter/Generator Control Module (SGCM) Coolant Tank Bolts	20 N·m	15 lb ft
Starter/Generator Control Module (SGCM) Coolant Tank Nuts	9 N·m	80 lb in
Starter/Generator Control Module (SGCM) Cooling Fan Bolt	9 N·m	80 lb in

Application	Specification	
	Metric	English
Starter/Generator Control Module (SGCM) Radiator Bolt	9 N·m	80 lb in
Starter/Generator Stator Coolant Inlet Pipe Bolt	9 N·m	80 lb in
Surge Tank Bolt/Nut	9 N·m	80 lb in
Thermal Bypass Fitting	35 N·m	26 lb ft
Thermal Bypass Hose Bolt	10 N·m	89 lb in
Thermostat Housing Bolt (4.8L, 5.3L, and 6.0L)	15 N·m	11 lb ft
Thermostat Housing Cover Bolt (6.6L)	21 N·m	16 lb ft
Thermostat Housing Crossover Bolt/Nut (6.6L)	21 N·m	16 lb ft
Transmission Control Module (TCM) Cover Bolt	9 N·m	80 lb in
Transmission Control Module (TCM) Electrical Connector Bolt	8 N·m	71 lb in
Turbocharger Coolant Bypass Valve (6.6L)	60 N·m	44 lb ft
Turbocharger Coolant Feed Pipe Bracket Bolt (6.6L)	21 N·m	16 lb ft
Turbocharger Coolant Feed Pipe Nut (6.6L)	9 N·m	80 lb in
Turbocharger Coolant Inlet Banjo Bolt (6.6L)	25 N·m	18 lb ft
Turbocharger Coolant Outlet Pipe Bolt/Nut (6.6L)	9 N·m	80 lb in
Water Crossover Bolt (8.1L)	50 N·m	37 lb ft
Water Outlet Bolt (8.1L)	30 N·m	22 lb ft
Water Outlet Stud (4.3L)	25 N·m	18 lb ft
Water Outlet Tube Bolt (6.6L)	21 N·m	16 lb ft
Water Pump Bolt (4.3L)	45 N·m	33 lb ft
Water Pump Bolt (4.8L, 5.3L, and 6.0L)		
First Pass	15 N·m	11 lb ft
Final Pass	30 N·m	22 lb ft
Water Pump Bolt (6.6L)	21 N·m	16 lb ft
Water Pump Bolt (8.1L)	50 N·m	37 lb ft
Water Pump Inlet Pipe Bolt (6.6L)	21 N·m	16 lb ft
Water Pump Pulley Bolt (4.3L)	25 N·m	18 lb ft
Water Pump to Oil Cooler Inlet Pipe Nut (6.6L)	21 N·m	16 lb ft
Wiring Harness Bracket to Thermostat Housing Bolt (6.6L)	8 N·m	71 lb in

Cooling System Description and Operation

Engine Coolant Indicators

ENGINE COOLANT HOT

The instrument panel cluster (IPC) displays ENGINE COOLANT HOT message when the IPC receives a class 2 message from the powertrain control module (PCM) requesting illumination of this driver warning.

ENGINE OVERHEATED

The IPC displays ENGINE OVERHEATED message when the IPC receives a class 2 message from the PCM requesting illumination of this driver warning.

LOW COOLANT LEVEL B

The IPC displays LOW COOLANT LEVEL message when the IPC receives a class 2 message from the PCM requesting illumination of this driver warning.

REDUCED ENGINE POWER

The IPC displays REDUCED ENGINE POWER message when the IPC detects a reduced engine power condition from the PCM. The IPC receives a class 2 message from the PCM requesting illumination when the engine temperature reaches 132°C (270°F).

Cooling Fan Control - Two Fan System

The engine cooling fan system consists of 2 electrical cooling fans and 3 fan relays. The relays are arranged in a series/parallel configuration that allows the powertrain control module (PCM) to operate both fans together at low or high speeds. The cooling fans and fan relays receive battery positive voltage from the underhood fuse block.

During low speed operation, the PCM supplies the ground path for the low speed fan relay through the low speed cooling fan relay control circuit. This energizes the low speed fan relay coil, closes the relay contacts, and supplies battery positive voltage from the low fan fuse through the cooling fan motor supply voltage circuit to the left cooling fan. The ground path for the left cooling fan is through the cooling fan s/p relay and the right cooling fan. The result is a series circuit with both fans running at low speed.

During high speed operation the PCM supplies the ground path for the low speed fan relay through the low speed cooling fan relay control circuit. After a 3 second delay, the PCM supplies a ground path for the high speed fan relay and the cooling fan s/p relay through the high speed cooling fan relay control circuit. This energizes the cooling fan s/p relay coil, closes the relay contacts, and provides a ground path for the left cooling fan. At the same time the high speed fan relay coil is energized closing the relay contacts and provides battery positive voltage from the high fan fuse on the cooling fan motor supply voltage circuit to the right cooling fan. During high speed fan operation, both engine cooling fans have there own ground path. The result is a parallel circuit with both fans running at high speed.

Important

The right and left cooling fan connectors are interchangeable. When servicing the fans be sure that the connectors are plugged into the correct fan.

The PCM commands the low speed cooling fans ON under the following conditions:

- Engine coolant temperature exceeds approximately 94.5°C (202°F).
- A/C refrigerant pressure exceeds 1447 kPa (210 psi).
- After the vehicle is shut OFF if the engine coolant temperature at key-off is greater than 101°C (214°F) the low speed fans will run for a minimum of 60 seconds After 60 seconds, if the coolant temperature drops below 101°C (214°F) the fans will shut OFF. The fans will automatically shut OFF after 3 min. regardless of coolant temperature.

The PCM commands the high speed fans ON under the following conditions:

- Engine coolant temperature exceeds approximately 104.25°C (220°F).
- A/C refrigerant pressure exceeds approximately 1824 kPa (265 psi).
- When certain DTCs set.

At idle and very low vehicle speeds the cooling fans are only allowed to increase in speed if required. This insures idle stability by preventing the fans from cycling between high and low speed.

Coolant Level Control (If Equipped)

The engine cooling system contains an engine coolant level switch to alert the driver in the event of a coolant loss. The powertrain control module (PCM) sends out a coolant loss signal over the coolant level switch signal circuit. When the engine coolant level switch reads a low coolant level in the fill tank, the switch opens. The message center receives its power from engine wiring harness junction block on the battery positive voltage circuit. Ground is provided by the ground circuits via the body wiring harness junction block and the engine wiring harness junction block. The cluster receives the class 2 message from the PCM indicating Low Coolant and displays the LOW COOLANT LEVEL message on the driver information center (DIC).

Coolant Heater

The optional engine coolant heater (RPO K05) operates using 110-volt AC external power and is designed to warm the coolant in the engine block area for improved starting in very cold weather 29°C (20°F). The coolant heater helps reduce fuel consumption when a cold engine is warming up. The unit is equipped with a detachable AC power cord. A weather shield on the cord is provided to protect the plug when not in use.

Cooling System

The cooling system's function is to maintain an efficient engine operating temperature during all engine speeds and operating conditions. The cooling system is designed to remove approximately one-third of the heat produced by the burning of the air-fuel mixture. When the engine is cold, the coolant does not flow to the radiator until the thermostat opens. This allows the engine to warm quickly.

Cooling Cycle

Coolant is drawn from the radiator outlet and into the water pump inlet by the water pump. Coolant will then be pumped through the water pump outlet and into the engine block. In the engine block, the coolant circulates through the water pump outlet and into the engine block. In the engine block, the coolant circulates through the water jackets surrounding the cylinders, where it absorbs heat.

Some coolant is also pumped from the water pump to the heater core, then back to the water pump. This provides the passenger compartment with heat and defrost.

The coolant is then forced through the cylinder head gasket openings and into the cylinder heads. In the cylinder heads, the coolant flows through the water jackets surrounding the combustion chambers and valve seats, where it absorbs additional heat.

Coolant is also directed to the throttle body. There it circulates through passages in the casting. During initial start up, the coolant assists in warming the throttle body. During normal operating temperatures, the coolant assists in regulating the throttle body temperature.

Cooling Cycle (6.6L Diesel Engine)

Coolant is drawn from the radiator outlet and into the water pump inlet by the water pump. The coolant flows to the heater core while the engine is running. This provides the passenger compartment with heat and defrost.

Coolant is then pumped through the water pump outlet and through the coolant pipe to the engine oil cooler. The coolant flows around the oil cooler element and to the rear engine cover. The rear engine cover distributes the coolant flow to both banks of the engine block. In the engine block, the coolant circulates through the water jackets surrounding the cylinders where it absorbs heat.

The coolant is then forced through the cylinder head gasket openings and into the cylinder heads. In the cylinder heads, the coolant flows through the water jackets surrounding the combustion chambers and valve seats, where it absorbs additional heat.

Coolant is also directed to the turbocharger. There it circulates through passages in the center housing. During engine warm-up cycle the bypass valve located in the turbocharger inlet hose at the outlet pipe prevents coolant flow. During normal operating temperatures, the coolant assists in keeping the turbocharger cool.

From the cylinder heads, the coolant flows to the thermostats. The coolant flows from the thermostat housing to the water pump through the bypass pipe until the enginereaches 85°C (185°F).

Operation of the cooling system requires proper functioning of all cooling system components. The cooling system consists of the following components:

Coolant

The engine coolant is a solution made up of a 50-50 mixture of DEX-COOL and suitable drinking water. The coolant solution carries excess heat away from the engine to the radiator, where the heat is dissipated to the atmosphere.

Radiator

The radiator is a heat exchanger. It consists of a core and two tanks. The aluminum core is a tube and fin crossflow design that extends from the inlet tank to the outlet tank. Fins are placed around the outside of the tubes to improve heat transfer to the atmosphere.

The inlet and outlet tanks are a molded, high temperature, nylon reinforced plastic material. A high temperature rubber gasket seals the tank flange edge to the aluminum core. The tanks are clamped to the core with clinch tabs. The tabs are part of the aluminum header at each end of the core.

The radiator also has a drain cock located in the bottom of the left hand tank. The drain cock unit includes the drain cock and drain cock seal.

The radiator removes heat from the coolant passing through it. The fins on the core transfer heat from the coolant passing through the tubes. As air passes between the fins, it absorbs heat and cools the coolant.

Surge Tank

The surge tank is a plastic tank with a threaded pressure cap. The tank is mounted at a point higher than all other coolant passages. The surge tank provides an air space in the cooling system that allows the coolant to expand and contract. The surge tank provides a coolant fill point and a central air bleed location.

During vehicle use, the coolant heats and expands. The increased coolant volume flows into the surge tank. As the coolant circulates, any air is allowed to bubble out. Coolant without air bubbles absorbs heat much better than coolant with bubbles.

Pressure Cap

The pressure cap seals the cooling system. It contains a blow off or pressure relief valve and a vacuum or atmospheric valve. The pressure valve is held against its seat by a spring, which protects the radiator from excessive cooling system pressure. The vacuum valve is held against its seat by a spring, which permits opening of the valve to relieve vacuum created in the cooling system as it cools off. The vacuum, if not relieved, might cause the radiator and/or coolant hoses to collapse.

The pressure cap allows cooling system pressure to build up as the temperature increases. As the pressure builds, the boiling point of the coolant increases. Engine coolant can be safely run at a temperature much higher than the boiling point of the coolant at atmospheric pressure. The hotter the coolant is, the faster the heat transfers from the radiator to the cooler, passing air.

The pressure in the cooling system can get too high. When the cooling system pressure exceeds the rating of the pressure cap, it raises the pressure valve, venting the excess pressure.

As the engine cools down, the temperature of the coolant drops and a vacuum is created in the cooling system. This vacuum causes the vacuum valve to open, allowing outside air into the surge tank. This equalizes the pressure in the cooling system with atmospheric pressure, preventing the radiator and coolant hoses from collapsing.

Cooling Fan and Clutch

The engine cooling fan and clutch are driven by the crankshaft via the drive belt. The cooling fan draws air through the radiator to improve the transfer of heat from the coolant to the atmosphere. As the fan blades spin, they pull cool, outside air past the radiator core. The fan clutch drives the cooling fan. The fan clutch controls the amount of torque that is transmitted from the crankshaft to the fan blades. The clutch allows more torque to engage on the fan when the engine operating temperature increases and/or the vehicle speed is low. As the torque increases, the fan turns more quickly. The fan clutch decreases the torque applied to the cooling fan when the engine temperature decreases and/or the vehicle speed is high. As the torque decreases, the fan speed decreases.

Air Baffles and Seals

The cooling system uses deflectors, air baffles and air seals to increase cooling system capability. Deflectors are installed under the vehicle to redirect airflow beneath the vehicle and through the radiator to increase engine cooling. Air baffles are also used to direct airflow through the radiator and increase cooling capability. Air seals prevent air from bypassing the radiator and A/C condenser, and prevent recirculation of hot air for better hot weather cooling and A/C condenser performance.

Water Pump

The water pump is a centrifugal vane impeller type pump. The pump consists of a housing with coolant inlet and outlet passages and an impeller. The impeller is mounted on the pump shaft and consists of a series of flat or curved blades or vanes on a flat plate. When the impeller rotates, the coolant between the vanes is thrown outward by centrifugal force.

The impeller shaft is supported by one or more sealed bearings. The sealed bearings never need to be lubricated. Grease cannot leak out, dirt and water cannot get in as long as the seal is not damaged or worn.

The purpose of the water pump is to circulate coolant throughout the cooling system. The water pump is driven by the crankshaft via the drive belt.

Water Pump (6.6L Diesel Engine)

The water pump is a centrifugal vane impeller type pump. The water pump is gear driven by the crankshaft gear. The pump consists of a housing with coolant inlet and outlet passages and an impeller. The impeller is a flat plate mounted on the pump shaft with a series of flat or curved blades or vanes. When the impeller rotates, the coolant between the vanes is thrown outward by centrifugal force. The impeller shaft is supported by bearings. Splash of the engine oil lubricates the bearings. The bearings and shaft are sealed to prevent engine oil to mix with the coolant. If the seal fails, coolant will leak out the vent hole in the water pump housing.

The purpose of the water pump is to circulate coolant throughout the cooling system.

Thermostat

The thermostat is a coolant flow control component. It's purpose is to help regulate the operating temperature of the engine. It utilizes a temperature sensitive wax-pellet element. The element connects to a valve through a small piston. When the element is heated, it expands and exerts pressure against the small piston. This pressure forces the valve to open. As the element is cooled, it contracts. This contraction allows a spring to push the valve closed.

When the coolant temperature is below the rated thermostat opening temperature, the thermostat valve remains closed. This prevents circulation of the coolant to the radiator and allows the engine to warm up. After the coolant temperature reaches the rated thermostat opening temperature, the thermostat valve will open. The coolant is then allowed to circulate through the thermostat to the radiator where the engine heat is dissipated to the atmosphere. The thermostat also provides a restriction in the cooling system, after it has opened. This restriction creates a pressure difference which prevents cavitation at the water pump and forces coolant to circulate through the engine block.

Thermostats (6.6L Diesel Engine)

The thermostats are coolant flow control components. The purpose of the thermostats are to regulate the correct operating temperature of the engine. The thermostats utilizes a temperature sensitive wax-pellet element. The element connects to a valve through a piston. When the element is heated, it expands and exerts pressure against a rubber piston. This pressure forces the valve to open. As the element is cooled, it contracts. This contraction allows a spring to push the valve closed.

The 6.6L diesel engine requires two thermostats for correct coolant flow. The front thermostat is a dual purpose thermostat. The front thermostat controls the coolant flow to the bypass port and to the water outlet. The rear thermostat only controls the coolant flow to the water outlet.

When the coolant temperature is below the rated thermostat opening temperature, the front thermostat valve remains closed to the water outlet and is opened to the bypass port. The bottom portion of the thermostat is raised off of the bypass port while at the same time the top portion closes the coolant flow to the water outlet. The rear thermostat also is closed to the water outlet during engine warm-up. This prevents circulation of the coolant to the radiator and allows the engine to warm up quickly. After the coolant temperature reaches 82°C (180°F) the front thermostat primary valve opening temperature, the front thermostat primary valve will start to open. The coolant is then allowed to circulate through the thermostat to the radiator where the engine heat is dissipated to the atmosphere. As the engine coolant

reaches 85°C (185°F) and more coolant demand is required the front thermostat secondary valve begins to close the bypass port and the rear thermostat begins to open coolant flow to the water outlet. The thermostats will continue to control the coolant flow by opening and closing. The front thermostat will be fully open when the coolant temperature reaches 95°C (203°F) the rear thermostat will be fully open when the coolant temperature reaches 100°C (212°F). The thermostat also provides a restriction in the cooling system, even after the it has opened. This restriction creates a pressure difference which prevents cavitation at the water pump and forces coolant to circulate through the engine block.

Engine Oil Cooler

The engine oil cooler is a heat exchanger. It is located inside the left side end tank of the radiator. The engine oil temperature is controlled by the temperature of the engine coolant that surrounds the oil cooler in the radiator.

The engine oil pump, pumps the oil through the engine oil cooler line to the oil cooler. The oil then flows through the cooler where the engine coolant absorbs heat from the oil. The oil is then pumped through the oil cooler return line, to the oil filter, to the engine block oil system.

Engine Oil Cooler (6.6L Diesel Engine)

The engine oil cooler is a heat exchanger. The engine oil cooler is mounted to the left lower corner of the engine. The oil filter is attached to the oil cooler housing. The engine coolant flows around the oil cooler element. The oil cooler element is a series of plates. The engine oil temperature is regulated by the temperature of the engine coolant that surrounds the oil cooler as the engine oil passes through the cooler.

The engine oil pump, pumps the oil through the engine oil feed line to the oil cooler. The oil then flows down through the cooler while the engine coolant absorbs heat from the oil. The oil is then pumped through the oil return line, to the oil filter, then to the main engine oil passage.

Transmission Oil Cooler

The transmission oil cooler is a heat exchanger. It is located inside the right side end tank of the radiator. The transmission fluid temperature is regulated by the temperature of the engine coolant in the radiator.

The transmission oil pump, pumps the fluid through the transmission oil cooler line to the transmission oil cooler. The fluid then flows through the cooler where the engine coolant absorbs heat from the fluid. The fluid is then pumped through the transmission oil cooler return line, to the transmission.

Turbocharger Bypass Valve (6.6L Diesel Engine)

The turbocharger bypass valve is a temperature control valve. The valve is located in the turbocharger coolant inlet hose at the water outlet tube.

The purpose of the valve is to close the coolant flow through the turbocharger. Closing off the coolant flow through the turbocharger avoids turbocharger overcooling.

Starter Generator Control Module Cooling System Description and Operation

The starter/generator control module (SGCM) cooling system description and operation is divided into three areas:

- SGCM Cooling System Components
- SGCM Cooling System Operation
- SGCM Cooling System Coolant Cycle

SGCM Cooling System Components

SGCM

The starter/generator control module (SGCM) is a GMLAN device. The SGCM monitors 3 coolant temperature sensors that are mounted in the coolant stream, 4 coolant level sensors that are mounted in the electronics coolant of the SGCM, the SGCM coolant pump relay control circuit, and the SGCM coolant fan relay control circuit to maintain its internal cooling requirements. Internal to the SGCM are the

electronics that control the system voltage, these electronic components are immersed in a coolant. This coolant is not the coolant that is circulated though the coolant circuit, the coolant helps evenly distribute the heat of the electronics and are monitored by the 4 coolant level sensors.

SGCM Coolant Pump

The SGCM coolant pump is controlled through a relay by the SGCM. The SGCM coolant pump circulates the coolant through the SGCM cooling system.

SGCM Coolant Fan

The SGCM coolant fan is controlled through a solid state relay by the SGCM. The SGCM coolant fan is a puller type fan that draws air through the SGCM radiator.

SGCM Cooling System Operation

The purpose of the starter/generator control module (SGCM) coolant system is to cool the SGCM internal electronics. The SGCM commands the SGCM the SGCM coolant pump and coolant fan ON or OFF at the following temperatures:

- Coolant pump from OFF to ON at 60°C (140°F)
- Coolant pump from ON to OFF at 55°C (131°F)
- Coolant fan from OFF to low speed at 75°C (167°F)
- Coolant fan from low speed to high speed at 80°C (176°F)
- Coolant fan from high speed to low speed at 75°C (167°F)
- Coolant fan from low speed to OFF at 70°C (158°F)

SGCM Cooling System Coolant Cycle

The starter/generator control module (SGCM) coolant is a 50/50 mixture of DEX-COOL antifreeze and clean, drinkable water. The coolant is drawn from the SGCM coolant tank by the SGCM coolant pump. The coolant pump then forces the coolant through the SGCM coolant radiator. The coolant then is sent to the SGCM to cool the SGCM electronics.

Engine Electrical

Fastener Tightening Specifications

Application	Specification	
	Metric	English
3-Phase Cable Bracket Cover Bolt	9 N·m	80 lb in
3-Phase Cable Bracket Nut	9 N·m	80 lb in
3-Phase Cable Cover Nut	9 N·m	80 lb in
3-Phase Cable Nut to Generator Control Module	15 N·m	11 lb ft
3-Phase Cable Nut to Stator	14 N·m	10 lb ft
Air Cleaner Outlet Duct Clamp	4 N·m	35 lb in
Accessory Power Receptacle Harness Ground Wire Bolt	9 N·m	80 lb in
Auxiliary Battery Cable Clip Bolt	10 N·m	89 lb in
Auxiliary Battery Negative Cable Bolt (6.6L)	34 N·m	25 lb ft
Auxiliary Battery Positive Cable Nut	9 N·m	80 lb in
Auxiliary Battery Relay Nut	9 N·m	80 lb in
Auxiliary Battery Tray Bolt	9 N·m	80 lb in
Auxiliary Battery Tray Nut	25 N·m	18 lb ft
Auxiliary Generator Bolt (6.6L)	50 N·m	37 lb ft
Auxiliary Generator Bracket Bolt (6.6L)	50 N·m	37 lb ft
Auxiliary Negative Battery Cable Bolt	17 N·m	13 lb ft
Auxiliary Positive Battery Cable Bolt	17 N·m	13 lb ft
Auxiliary Positive Battery Cable Nut	8 N·m	71 lb in
Auxiliary Positive Cable to Relay Nut	9 N·m	80 lb in
Battery Cable Bracket Bolt	25 N·m	18 lb ft
Battery Cable Channel Bolt	12 N·m	106 lb in
Battery Cable Channel Bolt (6.6L)	8 N·m	71 lb in
Battery Cable Junction Block Bracket Bolt (4.8L, 5.3L, 6.0L, and 8.1L)	9 N·m	80 lb in
Battery Cable Retainer Nut (6.6L)	12 N·m	106 lb in
Battery Hold Down Retainer Bolt	25 N·m	18 lb ft
Battery Tray Bolt	9 N·m	80 lb in
Crossbar Bolt	100 N·m	74 lb ft
Drive Belt Tensioner Bolt (6.6L)	41 N·m	30 lb ft
Engine Wiring Harness/Auxiliary Negative Battery Cable Bolt	16 N·m	12 lb ft
Engine Wiring Harness Ground Bolt	16 N·m	12 lb ft
Engine Wiring Harness Ground/Negative Cable Bolt	25 N·m	18 lb ft
Engine Wiring Harness Ground/Negative Cable Bolt (6.6L)	34 N·m	25 lb ft
Exhaust Gas Recirculation (EGR) Vacuum Pump Bolt (6.6L)	22 N·m	16 lb ft
Fender to Cowl Support Brace Bolt	9 N·m	80 lb in
Flexplate Bolt	100 N·m	74 lb ft
Forward Lamp Wiring Harness Ground/Negative Cable Bolt	9 N·m	80 lb in
Front End Diagonal Brace Bolt	9 N·m	80 lb in
Fuel Bleed Valve Bracket Nut (6.6L)	25 N·m	18 lb ft
Generator Battery Carrier Air Duct Hose to Fan Screw	1 N·m	9 lb in
Generator Battery Carrier Air Duct Hose to Generator Battery Carrier	0.5 N·m	44 lb in
Generator Battery Carrier Battery 1 to Battery 2 Power Cable Nut	10 N·m	89 lb in
Generator Battery Carrier Battery 2 to Battery 3 Power Cable Nut	10 N·m	89 lb in
Generator Battery Carrier Battery Cut Off Switch Nut	10 N·m	89 lb in
Generator Battery Carrier Battery Hold Bracket Nut	10 N·m	89 lb in
Generator Battery Carrier Nut	47 N·m	35 lb ft
Generator Battery Carrier Fan Screw	1 N·m	9 lb in
Generator Battery Carrier Fan Screw	2 N·m	18 lb in
Generator Battery Carrier Fuse Holder Screws	2 N·m	18 lb in

Application	Specification	
	Metric	English
Generator Battery Carrier Fuse Power Cable to High Current Sensor Nut	10 N·m	89 lb in
Generator Battery Carrier Ground Strap Nut	10 N·m	89 lb in
Generator Battery Carrier Ground Wire Screw	6 N·m	53 lb in
Generator Battery Carrier High Current Connector Screws	6 N·m	53 lb in
Generator Battery Carrier High Current Connector to Battery 3 Nut	10 N·m	89 lb in
Generator Battery Carrier High Current Sensor Nut	6 N·m	53 lb in
Generator Battery Carrier Intermediate Cover Screw	6 N·m	53 lb in
Generator Battery Carrier Maxi-Fuse Nut	10 N·m	89 lb in
Generator Battery Carrier Receptacle Outlet Cover Screws	0.5 N·m	4.4 lb in
Generator Battery Carrier Receptacle Outlet Screws	2 N·m	18 lb in
Generator Battery Carrier Service Disconnect Switch Power Cable to High Current Connector Nut	10 N·m	89 lb in
Generator Battery Carrier Service Disconnect Switch Screw/Nut	6 N·m	53 lb in
Generator Battery Carrier Temperature Sensor Screw	0.5 N·m	4.4 lb in
Generator Battery Control Module Nut	6 N·m	53 lb in
Generator Bolt (4.3L)	50 N·m	37 lb ft
Generator Bolt (4.8L, 5.3L, 6.0L, 6.6L, and 8.1L)	50 N·m	37 lb ft
Generator Bracket Bolt (4.8L, 5.3L, 6.0L, 6.6L, and 8.1L)	50 N·m	37 lb ft
Generator Bracket Bolt/Nut (4.3L)	41 N·m	30 lb ft
Generator Bracket Stud (8.1L)	20 N·m	15 lb ft
Generator Cable Nut	9 N·m	80 lb in
Generator Control Module (GCM) Bolt	20 N·m	15 lb ft
Generator Control Module (GCM) Brace Bolt	25 N·m	18 lb ft
Generator Control Module (GCM) Bracket Bolt	9 N·m	80 lb in
Generator Control Module (GCM) Bracket Nut	25 N·m	18 lb ft
Generator Control Module (GCM) Coolant Tank Bolt	9 N·m	80 lb in
Generator Control Module (GCM) Cover Bolt	9 N·m	80 lb in
Ground Strap Nut	9 N·m	80 lb in
Ground Strap Nut (Energy Storage Box)	10 N·m	89 lb in
Harness Clip to Junction Block Bracket Bolt	9 N·m	80 lb in
Heater Hose Bracket Bolt (4.3L)	25 N·m	18 lb ft
Heater Outlet Pipe Bolt (6.6L)	25 N·m	18 lb ft
Idler Pulley Bolt (6.6L)	43 N·m	32 lb ft
J-46093 Bolt	50 N·m	37 lb ft
M-Terminal Stud Nut (6.6L)	8 N·m	71 lb in
Negative Battery Cable Bolt	17 N·m	13 lb ft
Positive Battery Cable Bolt	17 N·m	13 lb ft
Positive Cable Clip Nut (8.1L)	8 N·m	71 lb in
Positive Cable at Underhood Electrical Center Bolt	9 N·m	80 lb in
Positive/Negative Battery Cable Bolt (14V)	9 N·m	80 lb in
Positive/Negative Battery Cable Channel Rear Nut (42V)	10 N·m	89 lb in
Positive/Negative Battery Cable Grommet Nut (42V)	10 N·m	89 lb in
Positive/Negative Battery Cable Ground Strap Bolt (42V)	10 N·m	89 lb in
Positive/Negative Battery Cable Retainer Nut (42V)	20 N·m	15 lb ft
Powertrain Control Interface	25 N·m	18 lb ft
Starter Bolt (4.3L)	43 N·m	32 lb ft
Starter Bolt (4.8L, 5.3L, 6.0L, and 8.1L)	50 N·m	37 lb ft
Starter Bolt (6.6L)	78 N·m	58 lb ft
Starter/Generator Stator Stud	16 N·m	12 lb ft
Starter Heat Shield Bolt (8.1L)	3 N·m	35 lb in
Starter Heat Shield Nut (8.1L)	5 N·m	44 lb in

Application	Specification	
	Metric	English
Starter Lead Nut	9 N·m	80 lb in
Starter Solenoid Bolt (6.6L)	10 N·m	89 lb in
Starter Solenoid Nut	3.4 N·m	30 lb in
Transmission Cover Bolt (4.8L, 5.3L, and 6.0L)	9 N·m	80 lb in
Transmission Fill Tube Nut	18 N·m	13 lb ft
Transmission Heat Shield	17 N·m	13 lb ft
Transmission Mount Nut	40 N·m	29 lb ft
Transmission Support Bolts/Nuts	70 N·m	50 lb ft
Wiring Harness Bracket Bolt (4.3L)	25 N·m	18 lb ft

Battery Usage – Non HP2

Base	
Cold Cranking Amperage (CCA)	600 A
Reserve Capacity Rating	115 Minutes
Replacement Battery Number	78-6YR
Optional (Dual)	
Cold Cranking Amperage (CCA)	770 A
Reserve Capacity Rating	115 Minutes
Replacement Battery Number	78-7YR

Battery Usage (HP2)

Parallel Hybrid Truck (PHT) (HP2)	
GM Part Number	88986971
Replacement Battery Number	Panasonic HV1255

Battery Temperature vs Minimum Voltage

Estimated Temperature °F	Estimated Temperature °C	Minimum Voltage
70 or above	21 or above	9.6
50	10	9.4
32	0	9.1
15	-10	8.8
0	-18	8.5
Below 0	Below -18	8.0

Generator Usage

Base	
Generator Model	Delphi AD230
Rated Output	102 A
Load Test Output	71 A
Optional (Dual)	
Generator Model	Delphi AD244
Rated Output	130 A
Load Test Output	91 A
Bosch® Generator	
Generator Model	Bosch® 15755900
Rated Output	130 A
Load Test Output	91 A

Battery Description and Operation

Caution

Batteries produce explosive gases, contain corrosive acid, and supply levels of electrical current high enough to cause burns. Therefore, to reduce the risk of personal injury when working near a battery:

- Always shield your eyes and avoid leaning over the battery whenever possible.
- Do not expose the battery to open flames or sparks.
- Do not allow the battery electrolyte to contact the eyes or the skin. Flush immediately and thoroughly any contacted areas with water and get medical help.
- Follow each step of the jump starting procedure in order.
- Treat both the booster and the discharged batteries carefully when using the jumper cables.

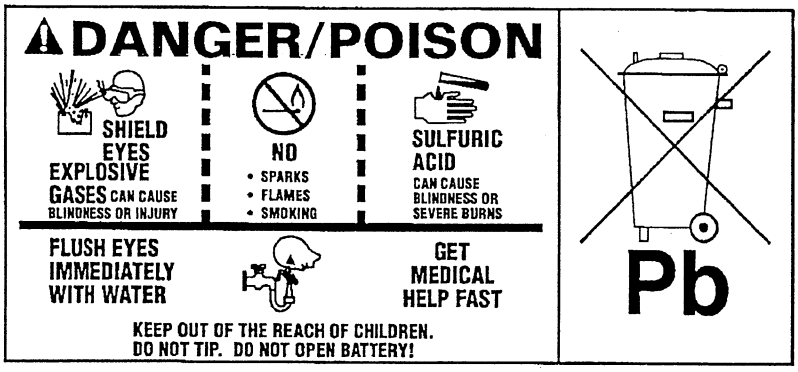

The maintenance free battery is standard. There are no vent plugs in the cover. The battery is completely sealed except for two small vent holes in the side. These vent holes allow the small amount of gas that is produced in the battery to escape.

The battery has three functions as a major source of energy:

- Engine cranking
- Voltage stabilizer
- Alternate source of energy with generator overload.

The battery specification label (example below) contains information about the following:

- The test ratings
- The original equipment catalog number
- The recommended replacement model number

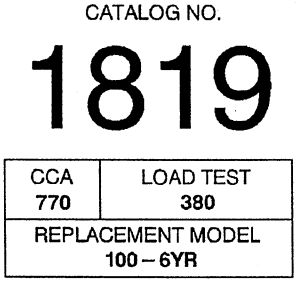

A battery has 2 ratings:

- Reserve capacity
- Cold cranking amperage

When a battery is replaced use a battery with similar ratings. Refer to the battery specification label on the original battery or refer to Battery Usage .

Reserve Capacity

Reserve capacity is the amount of time in minutes it takes a fully charged battery, being discharged at a constant rate of 25 amperes and a constant temperature of 27°C (80°F) to reach a terminal voltage of 10.5 V. Refer to Battery Usage for the reserve capacity rating of the original equipment battery.

Cold Cranking Amperage

The cold cranking amperage is an indication of the ability of the battery to crank the engine at cold temperatures. The cold cranking amperage rating is the minimum amperage the battery must maintain for 30 seconds at -18°C (0°F) while maintaining at least 7.2 volts. Refer to Battery Usage for the cold cranking amperage rating for this vehicle.

Circuit Description

The battery positive terminal supplies Battery Positive voltage to the under hood fuse block and the rear fuse block. The under hood fuse block provides a cable connection for the generator and a cable connection for the starter.

The battery negative terminal is connected to chassis ground G305 and supplies ground for the AD converter in the DIM.

Starting System Description and Operation

The PG-260M and Hitachi-S14-100B are non-repairable starter motors. It has pole pieces that are arranged around the armature within the starter housing. When the solenoid windings are energized, the pull-in winding circuit is completed to ground through the starter motor. The hold-in winding circuit is completed to ground through the solenoid. The windings work together magnetically to pull in and hold in the plunger. The plunger moves the shift lever. This action causes the starter drive assembly to rotate on the armature shaft spline as it engages with the flywheel ring gear on the engine. At the same time, the plunger closes the solenoid switch contacts in the starter solenoid. Full battery voltage is then applied directly to the starter motor and it cranks the engine.

As soon as the solenoid switch contacts close, current stops flowing thorough the pull-in winding as battery voltage is now applied to both ends of the windings. The hold-in winding remains energized; its magnetic field is strong enough to hold the plunger, shift lever, starter drive assembly, and solenoid switch contacts in place to continue cranking the engine. When the engine starts, the pinion gear overrun sprag protects the armature from excessive speed until the switch is opened.

When the ignition switch is released from the CRANK position, voltage is removed from the starter solenoid S terminal. Current flows from the motor contacts through both windings to ground at the end of the hold-in winding. However, the direction of the current flow through the pull-in winding is now in the opposite direction of the current flow when the winding was first energized.

The magnetic fields of the pull-in and hold-in windings now oppose one another. This action of the windings, along with the help of the return spring, cause the starter drive assembly to disengage and the solenoid switch contacts to open simultaneously. As soon as the contacts open, the starter motor is turned off.

Charging System Description and Operation (W/O Generator/Battery Control Module)

Generator

The AD-230 and AD-244 generators are non-repairable. They are electrically similar to earlier models. The generators feature the following major components:

- The delta stator
- The rectifier bridge
- The rotor with slip rings and brushes
- A conventional pulley
- Dual internal fans
- A voltage regulator

The pulley and the fan cool the slip ring and the frame.

The AD stands for Air-cooled Dual internal fan; the 2 is an electrical design designator; the 30/44 denotes the outside diameter of the stator laminations in millimeters, over 100 millimeters. The generators is rated at 102 and 130 amperes respectively.

The generator features permanently lubricated bearings. Service should only include the tightening of mounting components. Otherwise, the generator is replaced as a complete unit.

Regulator

The voltage regulator controls the field current of the rotor in order to limit system voltage. The regulator switches the current on and off at a rate of 400 cycles per second in order to perform the following functions:

- Radio noise control
- Obtain the correct average current needed for proper system voltage control

At high speeds, the on-time may be 10 percent with the off-time at 90 percent. At low speeds, the on-time may be 90 percent and the off-time 10 percent.

Auxiliary Battery Charging

The auxiliary battery is charged in the same manner as the primary battery with the ignition switch in the run position and the engine running. The system contains the following components:

- Auxiliary battery.
- Auxiliary battery relay.
- Mega fuse.
- Junction block battery cable.
- Associated wiring.

The auxiliary battery relay coil is energized with the engine running through the fuse block and wiring, thus closing the relay contacts which allow the battery to be charged from the vehicle's generator via the battery junction block. The auxiliary battery relay is permanently grounded so any time the ignition switch is in the run position the relay will be energized.

The auxiliary battery is only used for accessories and is not part of the vehicle starting system. However if the primary battery fails and in need of an jump start, follow the service information for Jump Starting In Case Of Emergency using appropriate battery jumper cables.

Energy Storage Box (ESB) Description and Operation

Energy Storage Box (ESB)

The energy storage box (ESB) subsystem provides the capability to store electrical energy as chemical energy to provide the energy required by the Energy Management System. The ESB shall monitor the energy exchange along the 42-volt bus internal to the ESB and to provide status information to the hybrid control module (HCM). The 3 valve-regulated lead-acid batteries provide power for the 42-volt system. The "deep cycle" batteries employ Absorbent Glass Mat technology, specifically designed for hybrid vehicles, and are tailored to GM performance requirements. Lead-acid batteries are less costly to replace than nickel-metal hydride batteries or other battery technologies. They have a 50 to 55 amp hour Ahr. capacity and a projected 4-year life. The batteries are stored in a single energy storage module mounted under the rear seat. They power the electro-hydraulic power steering (EHPS) and the starter/generator. A conventional under-hood battery powers all the other electrical items, like the lighting, the driver information center (DIC) and the Infotainment system. The ESB physical content as follows:

- 3-Panasonic HV1255V valve regulated lead acid batteries, wired in series.
- Energy storage control module (ESCM)
- Service disconnect switch
- 2-120 V AC duplex outlet
- Battery module vent tubing system
- 42-volt bus fuse
- 12-volt ventilation fan and outlet duct
- Current sensor
- 42-volt harness and connector
- 12-volt connector and harness
- 120 V AC connector and harness

The ESB functional content as follows:

- Store electrical energy into chemical energy
- Receive 42-volt DC energy via the 42-volt bus for charging
- Determine appropriate power mode
- Monitor and calculates energy transfer and status
- Monitor temperature of batteries
- Monitor and control fan speed.
- Monitor and control the battery cut-off (BCO) switch.
- Provide an outlet interface to HVAC ventilation duct
- Provide removal of battery gases
- Provide a side impact 42-volt auto disconnect
- Communicate faults/information via LAN messages

Important

The Panasonic HV1255 VRLA batteries used in service will have approximately 80 percent state of charge (SOC) when shipped from the manufacture. BEFORE battery replacement, both the battery pack and faulty battery must be fully charged at the pack level (together) to ensure the vehicle battery pack will be equally balanced and charged. The new replacement battery will be charged to 100 percent SOC using the Battery Module Charger before installation.

The Panasonic batteries are designed to have a life span of approximately 62,000 amp hours.

Hybrid Control Module (HCM) Description and Operation

Hybrid Control Module (HCM)

The hybrid control module (HCM) is located on the engine fan shroud near the powertrain control module (PCM). It acts as a gateway between the high-speed GMLAN and Class 2 local area networks. If a module in the high-speed system needs to pass information to the Class II bus, it tags that message and passes it on to the HCM; the HCM reads the message and passes it along to the appropriate network. For example, if the starter generator control module (SGCM) needs to display a warning or alert the driver to a change in operating mode, the HCM would take that message from the high speed link and pass it to the display controller, which is on the Class II system. The HCM also:

- Controls automatic engine starts and stops
- Controls the energy flowing into/out of the 14-volt and 42-volt batteries
- Enables and disables power for the auxiliary power outlets
- Enables and disables surge smoothing/active damping
- Disables energy generation after airbag deployment
- Controls the auxiliary transmission pump, the power maintenance relay, and the auxiliary heater pump
- Controls starter generator speed during transmission downshift assists--The downshift assists support the engine during un-fueled downshifts from 4th to 3rd gear and 3rd to 2nd gear. The HCM calculates a target engine speed and uses the starter generator to maintain that target. The starter generator has to control engine speed, using a torque command, which is within the upper and lower torque limits specified by the HCM.

Starter/Generator Description and Operation

Instead of a conventional starter motor and generator, the PHT uses a compact 14-kW electric induction motor or starter generator integrated in a patented, space-efficient manner between the engine and transmission. The starter generator provides fast, quiet starting power and allows automatic engine stops and starts to conserve fuel. It also smooths out any driveline surges, generates electrical current to charge the batteries, runs auxiliary power outlets, and provides coast-down regenerative braking as an aid to fuel economy. The starter generator includes a rotor and stationary stator, housed inside the transmission bell housing. The stator is attached to the engine block and incorporates high efficiency/smaller package size coils formed by laser welding copper bars together instead of winding with copper wire. The rotor bolts directly to the engine crankshaft and spins inside the stator. Current flowing through the stator's electric windings generates magnetic forces in the rotor, which causes the rotor to turn, starting the engine. The starter generator is in series with the engine, connected directly to it, so that anytime the engine is turning, the Starter Generator is turning and vice versa. An auxiliary transmission oil pump helps enable the automatic start feature by assuring sufficient line pressure to allow torque transfer immediately upon driver command, when the engine is started.

Starter/Generator Control Module (SGCM) Description and Operation

The starter generator control module (SGCM) controls the flow of torque/energy into and out of the starter/generator. Overall, the SGCM controls the starter generator's engine cranking, torque control, speed control and torque smoothing/active damping functions. The SGCM also controls the four types of power:

- Perform bi-directional 36-volt DC to 12-volt DC electrical energy conversion between the 36-volt DC bus and the 12-volt DC bus for system energy management.
- Perform bi-directional DC/AC electrical energy conversion between the 36-volt DC bus and the 3-phase asynchronous machine
- Provide 120-volt 60Hz AC energy for on and off board electrical equipment.
- 28-volt AC for the starting function.

In the basic, 3-phase inversion/conversion process, 42-volt DC is converted to AC for starting, and, conversely, AC is converted to 42-volt DC for recharging. In addition, 14-volt power is converted to 42-volt for jump-starting, 42-volt power is converted to 14-volt for the battery charging function, and 42-volt power is converted to 120 volts AC for powering the auxiliary power outlets.

The SGCM has two discrete crank signal circuits inputs to calculate engine position. One is hard wired and one is a signal on the GMLAN bus. This acts as a back-up system in the event that one signal is interrupted the engine will be able to start and run although a DTC will set.

Engine Controls

Engine Controls – 4.3L

Ignition System Specifications

Application	Specification	
	Metric	English
Firing Order	1-6-5-4-3-2	
Spark Plug Wire Resistance	1,000 ohms per ft	
Spark Plug Torque	15 N·m	11 lb ft
Spark Plug Gap	1.52 mm	0.06 in
Spark Plug Type	R41-932 [AC plug type]	

Fastener Tightening Specifications

Application	Specification	
	Metric	English
Accelerator Cable Bracket Nut/Stud	12 N·m	106 lb in
Accelerator Control Cable Bracket Nut	10 N·m	89 lb in
Air Cleaner Outlet Duct Clamp	4 N·m	35 lb in
Air Cleaner Outlet Resonator Stud	10 N·m	89 lb in
Camshaft Position (CMP) Sensor Screws	2.2 N·m	20 lb in
Crankshaft Position (CKP) Sensor Bolt	9 N·m	80 lb in
Distributor Hold Down Bolt	25 N·m	18 lb ft
Distributor Cap Screws	2.4 N·m	21 lb in
Engine Coolant Temperature (ECT) Sensor	20 N·m	15 lb ft
Engine Shield Bolt	20 N·m	15 lb ft
Evaporative Emission (EVAP) Canister Bracket Bolt	25 N·m	18 lb ft
EVAP Canister Purge Solenoid Nut	12 N·m	106 lb in
EVAP Canister Vent Valve Bracket Bolt	12 N·m	106 lb in
Fuel Feed and Return Pipe Bracket Bolt	6 N·m	53 lb in
Fuel Feed and Return Pipe Bracket Nut to Transmission	25 N·m	18 lb ft
Fuel Feed and Return Pipes Fittings	28 N·m	21 lb ft
Fuel Feed and Return Pipe Nut	3 N·m	27 lb in
Fuel Injector Retainer Lock Nut	3 N·m	27 lb in
Fuel Tank Ground Strap Bolt	9 N·m	80 lb in
Fuel Tank Filler Housing to Body Screw	2.3 N·m	20 lb in
Fuel Tank Filler Housing to Fuel Tank Fill Pipe Screw	2.3 N·m	20 lb in
Fuel Tank Fill Pipe Clamp	2.5 N·m	22 lb in
Fuel Line Fitting	25 N·m	18 lb ft
Fuel Tank Shield Bolt	18 N·m	13 lb ft
Fuel Tank Strap Bolt	40 N·m	30 lb ft
Heated Oxygen Sensor (HO2S)	42 N·m	31 lb ft
Idle Air Control (IAC) Valve Screw	3 N·m	27 lb in
Ignition Coil Bracket Stud	11 N·m	97 lb in
Ignition Module Screw	3.5 N·m	31 lb in
Knock Sensor Bolt	25 N·m	18 lb ft
Mass Air Flow/Intake Air Temperature (MAF/IAT) Hose Clamp	4 N·m	35 lb in
Powertrain Control Module (PCM) Electrical Connector Bolt	8 N·m	71 lb in
Rotor Screw	2 N·m	18 lb in
Spark Plug (New AluminumHead)	20 N·m	15 lb ft
Spark Plug (New Iron Head)	30 N·m	22 lb ft

Application	Specification	
	Metric	English
Spark Plug (Used Head)	15 N·m	11 lb ft
Throttle Body Stud	9 N·m	80 lb in
Throttle Position (TP) Sensor Screw	2 N·m	18 lb in

Fuel System Specifications

Use regular unleaded gasoline rated at 87 octane or higher. It is recommended that the gasoline meet specifications which have been developed by the American Automobile Manufacturers Association (AAMA) and endorsed by the Canadian Motor Vehicle Manufacturers Association for better vehicle performance and engine protection. Gasoline meeting the AAMA specification could provide improved driveability and emission control system performance compared to other gasoline. For more information, write to: American Automobile Manufacturer's Association, 7430 Second Ave, Suite 300, Detroit MI 48202.

Be sure the posted octane is at least 87. If the octane is less than 87, you may get a heavy knocking noise when you drive. If it is bad enough, it can damage your engine.

If you're using fuel rated at 87 octane or higher and you hear heavy knocking, your engine needs service. Don't worry if you hear a little pinging noise when you're accelerating or driving up a hill. That is normal and you don't have to buy a higher octane fuel to get rid of pinging. It is the heavy, constant knock that means you have a problem.

Notice

Your vehicle was not designed for fuel that contains methanol. Do not use methanol fuel which can corrode metal parts in your fuel system and also damage plastic and rubber parts. This kind of damage would not be covered under your warranty.

If your vehicle is certified to meet California Emission Standards, indicated on the under hood emission control label, your vehicle is designed to operate on fuels that meet California specifications. If such fuels are not available in states adopting California emissions standards, your vehicle will operate satisfactorily on fuels meeting federal specifications, but emission control system performance may be affected. The malfunction indicator lamp on your instrument panel may turn ON and/or your vehicle may fail a smog-check test. If this occurs, return to your authorized dealer for diagnosis to determine the cause of failure. In the event there is a determination that the cause of the condition is the type of fuels used, repairs may not be covered by your warranty.

Some gasolines that are not reformulated for low emissions may contain an octane-enhancing additive called methylcyclopentadienyl manganese tricarbonyl (MMT). Ask your service station operator whether or not the fuel contains MMT.

Engine Controls – 4.8, 5.3 & 6.0L

Ignition System Specifications

Application	Specification	
	Metric	English
Firing Order	1-8-7-2-6-5-4-3	
Spark Plug Wire Resistance	397-1,337 ohms	
Spark Plug Torque	15 N·m	11 lb ft
Spark Plug Gap	1.52 mm	0.060 in
Spark Plug Type	25171803 [AC plug type] 12567759 [NGK plug type]	

Fastener Tightening Specifications

Application	Specifications	
	Metric	English
3-Phase Cable Bracket Nut	15 N·m	11 lb ft
3-Phase Cable to Starter/Generator Control Module (SGCM) Nut	9 N·m	80 lb in
Accelerator Pedal Bolt	9 N·m	80 lb in
Air Cleaner Outlet Duct Clamp	4 N·m	35 lb in
Auxiliary Heater Water Pump Bracket Bolt	15 N·m	11 lb ft
Brake Pipe Fittings to Electronic Brake Control Module (EBCM)	25 N·m	18 lb ft
Camshaft Position (CMP) Sensor Bolt	29 N·m	21 lb ft
Canister Vent Solenoid (CVS) Bracket Bolt	12 N·m	106 lb in
Crankshaft Position (CKP) Sensor Bolt	25 N·m	18 lb ft
Electro-Hydraulic Control Unit (EHCU) Bolts	25 N·m	18 lb ft
Engine Coolant Temperature (ECT) Sensor	20 N·m	15 lb ft
Engine Wiring Harness Bracket Nut	5 N·m	44 lb in
EVAP Canister Bolt/Nut	25 N·m	18 lb ft
EVAP Canister Bracket Nut	25 N·m	18 lb ft
EVAP Canister Purge Solenoid Bolt	10.5 N·m	93 lb in
EVAP Vent Valve Bracket Bolt	12 N·m	106 lb in
Fuel Composition Sensor Nut	17 N·m	13 lb ft
Fuel Composition Sensor to Bracket Bolt	10 N·m	89 lb in
Fuel Feed and EVAP Pipe Assembly Nut	12 N·m	106 lb in
Fuel Line Fitting	25 N·m	18 lb ft
Fuel Pipe Bracket Nut	10 N·m	89 lb in
Fuel Rail Bolts	10 N·m	89 lb in
Fuel Tank Fill Pipe Clamp	2.5 N·m	22 lb in
Fuel Tank Filler Housing to Body Screw	2.3 N·m	20 lb in
Fuel Tank Filler Pipe Housing to Fuel Tank Fill Pipe Screw	2.3 N·m	20 lb in
Fuel Tank Ground Strap Bolt	9 N·m	80 lb in
Fuel Tank Shield Bolt	18 N·m	13 lb ft
Fuel Tank Strap Bolt	40 N·m	30 lb ft
Heated Oxygen Sensor (HO2S)	42 N·m	31 lb ft
Ignition Coil Bolt	8 N·m	71 lb in
Knock Sensor	20 N·m	15 lb ft
Mass Air Flow/Intake Air Temperature (MAF/IAT) Sensor Clamp	7 N·m	62 lb in
Powertrain Control Module (PCM) Electrical Connector Bolt	8 N·m	71 lb in
Rear Fuel Line Bundle Nut	12 N·m	106 lb in
Spark Plug		
• New Head	20 N·m	15 lb ft
• Used Head	15 N·m	11 lb ft

Application	Specifications	
	Metric	English
Starter/Generator Control Module (SGCM) Cover Bolt	9 N·m	80 lb in
Throttle Actuator Control (TAC) Module Nut	9 N·m	80 lb in
Throttle Body Nut	10 N·m	89 lb in

Engine Controls – 6.6L Diesel

Fastener Tightening Specifications

Application	Specification	
	Metric	English
Accelerator Pedal Bolt	9N·m	80 lb in
Air Cleaner Housing Door Screw	4 N·m	35 lb in
Air Cleaner Outlet Duct Clamp	4 N·m	35 lb in
Air Conditioning Compressor Bolt	50 N·m	37 lb ft
Air Conditioning Compressor/Power Steering Bracket Bolt	46 N·m	34 lb ft
Air Inlet Tube Nut	25 N·m	18 lb ft
Air Inlet Tube to Intake Manifold Tube Bolt/Nut	10 N·m	89 lb in
Battery Positive Cable Junction Block Bracket Bolt	9 N·m	80 lb in
Camshaft Position (CMP) Sensor Bolt	10 N·m	89 lb in
Charged Air Cooler Duct Clamp	6 N·m	53 lb in
Crankshaft Position (CKP) Sensor Bolt	10 N·m	89 lb in
Crankshaft Position Sensor (CKP) Sensor Spacer Bolt	10 N·m	89 lb in
Drive Belt Tensioner Bolt	50 N·m	37 lb ft
Electrical Harness Bolt	4 N·m	35 lb in
Electronic Brake Control Module Bracket Bolt	25 N·m	18 lb ft
Engine Coolant Temperature (ECT) Sensor	20 N·m	15 lb ft
Engine Harness Main Electrical Connector Bolt	10 N·m	89 lb in
Engine Harness Power Lead Nut	10 N·m	89 lb in
Engine Wiring Harness Main Connector Bracket Bolt	21 N·m	15 lb ft
Engine Wiring Harness Ground Bolt	34 N·m	25 lb ft
Exhaust Gas Recirculation (EGR) Coolant Pipe Bolt	25 N·m	18 lb ft
Exhaust Gas Recirculation (EGR) Cooler Heat Protector Bolt	25 N·m	18 lb ft
Exhaust Gas Recirculation (EGR) Cooler Tube Bolt	50 N·m	37 lb ft
Exhaust Gas Recirculation (EGR) Cooler Tube Rear Bolt	20 N·m	15 lb ft
Exhaust Gas Recirculation (EGR) Valve/Solenoid Bolt	20 N·m	15 lb ft
Fuel Bundle Nut	16 N·m	12 lb ft
Fuel Cooler Bolt	18 N·m	13 lb ft
Fuel Cooler Bracket Bolt	18 N·m	13 lb ft
Fuel Cooler Nut	40 N·m	30 lb ft
Fuel Feed Pipe Bolt/Nut	25 N·m	18 lb ft
Fuel Feed Pipe Nut	41 N·m	30 lb ft
Fuel Filter Bracket Bolt	20 N·m	15 lb ft
Fuel Filter Bracket to Fuel Filter/Heater Element Housing	20 N·m	15 lb ft
Fuel Injection Pump Adapter Bolt	20 N·m	14 lb ft
Fuel Injection Pump Bolt	21 N·m	15 lb ft
Fuel Injection Pump Gear Nut	70 N·m	52 lb ft
Fuel Injector Bracket Bolt	30 N·m	22 lb ft
Fuel Injector Pipe Fitting	41 N·m	30 lb ft
Fuel Inlet Pipe to Fuel Rail Fitting	41 N·m	30 lb ft
Fuel Line Bracket Nut	16 N·m	12 lb ft
Fuel Line to Balance Pump Fitting	30 N·m	22 lb ft
Fuel Pipe Bracket Bolt	25 N·m	18 lb ft

Application	Specification	
	Metric	English
Fuel Pressure Regulator Screws		
• First Pass	4 N·m	35 lb in
• Final Pass	7 N·m	62 lb in
Fuel Pressure Relief Valve	100 N·m	74 lb ft
Fuel Rail Balance Pipe Bolt	25 N·m	18 lb ft
Fuel Rail Balance Pipe Fitting	41 N·m	30 lb ft
Fuel Rail Bolt	25 N·m	18 lb ft
Fuel Rail Feed Pipe Fitting	41 N·m	30 lb ft
Fuel Rail Pipe Clamp Bolt	25 N·m	18 lb ft
Fuel Return Line Clamp Bolt	25 N·m	18 lb ft
Fuel Tank Fill Pipe Clamp	2.5 N·m	22 lb in
Fuel Tank Filler Housing to Body Screw	2.3 N·m	20 lb in
Fuel Tank Filler Housing to Fuel Tank Fill Pipe Screw	2.3 N·m	20 lb in
Fuel Tank Ground Strap Bolt	9 N·m	80 lb in
Fuel Tank Shield Bolt	18 N·m	13 lb ft
Fuel Tank Strap Bolt	40 N·m	30 lb ft
Fuel Tank Vent Hose Clamp	2.5 N·m	22 lb in
Fuel Temperature Sensor	22 N·m	16 lb ft
Generator Bracket Bolt	46 N·m	34 lb ft
Glow Plug	18 N·m	13 lb ft
Glow Plug Control Module Bolt	10 N·m	89 lb in
Glow Plug Electrical Connector Nut	2 N·m	18 lb in
Glow Plug Harness Nut	1.7 N·m	15 lb in
Glow Plug Wiring Harness Bracket Bolt	10 N·m	89 lb in
Heater Outlet Hose Bolt	21 N·m	15 lb ft
Intake Air Heater Bolt	20 N·m	15 lb ft
Intake Air Temperature (IAT) Sensor	25 N·m	18 lb ft
Manifold Absolute Pressure (MAP) Sensor Bolt	10 N·m	89 lb in
Mass Air Flow (MAF)/Intake Air Temperature (IAT) Sensor Screw	8 N·m	70 lb in
Oil Level Indicator Tube Bolt	21 N·m	15 lb ft
Oil Level Indicator Tube Bracket Bolt	21 N·m	15 lb ft
Oil Level Sensor Harness Bolt	40 N·m	30 lb ft
Power Steering Pump Bracket Rear Bolts	50 N·m	37 lb ft
Return/Junction Block Fuel Line Clip	25 N·m	17 lb ft
Turbocharger Oil Feed Pipe Bolt	34 N·m	25 lb ft
Turbocharger Vane Position Control Solenoid Valve Bracket Bolt	23 N·m	18 lb ft
Turbocharger Vane Position Sensor	28 N·m	21 lb ft

Fuel System Specifications

What Fuel to Use in the United States

In the United States, for best results use Number 2-D diesel fuel year-round, above and below freezing conditions, as oil companies blend Number 2-D fuel to address climate differences. Number 1-D diesel fuel may be used in very cold temperatures when the temperature stays below -18°C (0°F). However, the fuel will produce a power and fuel economy loss. The use of Number 1-D diesel fuel in warm or hot climates may result in stalling, poor starting when the engine is hot and may damage the fuel injection system.

Diesel fuel may foam when filling the tank. This can cause the automatic pump nozzle to shut OFF, even though the tank is not full. If this happens, just wait for the foaming to stop and then continue to fill the tank.

What Fuel to Use in Canada

Canadian fuels are blended for seasonal changes. Diesel Type A fuel is blended for better cold weather starting (when it stays below -18°C (0°F). However, the fuel will produce a power and fuel economy loss. The use of Type A diesel fuel in warmer climates may result in stalling, poor starting. Diesel Type B fuel is blended for temperatures above -18°C (0°F). The emission control system requires the use of diesel fuel with low sulfur, 0.05 percent by weight , content. Both low and higher sulfur fuels will be available in Canada. Only low sulfur diesel fuels are available in the United States. Diesel-powered trucks must be refueled only with low sulfur fuel. Use of fuels with higher-sulfur content will affect the function of the emission components and may caused reduced performance, excessive smoke and unpleasant odor.

Very Cold Weather Operation

If the vehicle is driven in very cold temperatures and can not get a winterized Number 2-D that has been adapted to cold weather or a Number 1-D, use one gallon of kerosene for every two gallons of diesel fuel. Once you add kerosene, run the engine for several minutes to mix the fuels. Only add kerosene when the temperature falls below -18°C (0°F), because the fuel economy and lubricating qualities of kerosene is not as good as that of diesel fuel.

In cold weather , the fuel filter may become clogged (waxed). To unclog the filter, move the vehicle to a warm garage area and warm the filter to a temperature between 0-10°C (32-50°F). Replacing the filter is not necessary.

Fuel Specific Gravity Testing

Use a Diesel Fuel Quality Tester to measure the fuel specific gravity (API Rating). Follow the instructions on the tool to btain the proper temerpature-adjusted value. This information must be accurate for the proper diagnosis of the fuel system.

Fuel Injector Return Flow and Fuel Pressures

The fuel return from the fuel injectors to the tank will vary based on the API value of the fuel. Measure the Fuel API with the Diesel Fuel Quality Tester. For this reason the Fuel System Diagnosis-High Pressure Side values will vary for identifying a fuel injector or fuel pump concern. Use the following tables when referred to by the diagnostic. The first table is to be used during the initial diagnosis to identify the worst fuel injectors. After the fuel injectors that fail the first part of the test are replaced, the return flow from each fuel injector must be measured again. This is because the fuel system is returning less fuel to the tank, and thus the fuel pressure is higher during the retest. Failure to use the correct table may result in the replacement of good fuel injectors.

Initial Fuel Injector Return Flow Values

API Rating	Maximum Single Fuel Injector Return Flow	Maximum Fuel Injector Bank Return Flow
30-34	3 ml	12 ml
35-39	4 ml	16 ml
40-44	5 ml	20 ml

Retesting Fuel Injector Return Flow Values

API Rating	Maximum Single Fuel Injector Return Flow	Maximum Fuel Injector Bank Return Flow	Fuel Pressure at cranking speed (FICM Disabled)
30-34	4 ml	16 ml	176-180 Mpa
35-39	5 ml	20 ml	134-178 Mpa 176-180 Mpa
40-44	5 ml	20 ml	114-135 Mpa

Water in Fuel

Sometimes, water can be pumped into the fuel tank along with diesel fuel. This can happen if the service station does not regularly inspect and clean their fuel tanks, or the fuel gets contaminated for the service stations suppliers.

If water is pumped into the fuel tank, a water in fuel light will illuminate. If the water in fuel light illuminates, the excess water must be drained from the fuel system on the vehicle.

Very Cold Weather Operation

If the vehicle is driven in very cold temperatures and can not get a winterized Number 2-D that has been adapted to cold weather or a Number 1-D, use one gallon of kerosene for every two gallons of diesel fuel. Once you add kerosene, run the engine for several minutes to mix the fuels. Only add kerosene when the temperature falls below -18°C (0°F), because the fuel economy and lubricating qualities of kerosene is not as good as that of diesel fuel.

In cold weather , the fuel filter may become clogged (waxed). To unclog the filter, move the vehicle to a warm garage area and warm the filter to a temperature between 0-10°C (32-50°F). Replacing the filter is not necessary.

Water in Fuel

Sometimes, water can be pumped into the fuel tank along with diesel fuel. This can happen if the service station does not regularly inspect and clean their fuel tanks, or the fuel gets contaminated for the service stations suppliers.

If water is pumped into the fuel tank, a water in fuel light will illuminate. If the water in fuel light illuminates, the excess water must be drained from the fuel system on the vehicle.

Glow Plug System Description

In the diesel engine, air alone is compressed in the cylinder. Then, after the air has been compressed, a charge of fuel is sprayed into the cylinder and ignition occurs, due to the heat of compression. Eight glow plugs are used as an aid to starting.

Control of the glow plugs is accomplished by moving the logic for controlling the heat of the plugs to the engine control module (ECM). The new logic can incorporate the higher accuracy of digital processing compared to the previous analog controller. Additionally, logic involving engine speed and estimates of engine combustion can be added to the traditional time and temperature data used in the previous controller. This capability yields more optimum heat times for the glow plugs, thus pre-glow times can be kept to a minimum for short wait to crank times and maximum glow plug durability.

A normal functioning system operates as follows:

- Turn the ignition ON with the engine OFF, and at room temperature.
- The glow plugs turn ON for between 1 and 16 seconds.
- If the engine is cranked during or after the above sequence, the glow plugs may cycle ON and OFF after the engine control switch is returned from the crank position, whether the engine starts or not. The engine does not have to be running to terminate the glow plug cycling.

The glow plug initial ON time will vary based on the system voltage and temperature. Lower temperatures cause longer ON times.

The ECM provides glow plug operation after starting a cold engine. This post-start operation is initiated when the ignition switch is returned to Run, from the Start position. This function helps clean up excessive white smoke and/or poor idle quality after starting.

Glow Plugs

The glow plugs are heaters in each of the cylinders that turn ON when the ignition switch is turned to the Run position prior to starting the engine. They remain pulsing a short time after starting, then they are turned OFF.

A Wait to Start lamp on the instrument panel provides information on engine starting conditions. The Wait to Start lamp will not illuminate during post-start glow plug operation.

Glow Plug Relay/Controller

The glow plug relay is a solid state device which operates the glow plugs on Federal Emissions Vehicles. The glow plug controller is a solid state device which operates the glow plugs on California Emissions vehicles. Both components perform the same function of turning ON the glow plugs based on ECM commands

The glow plug controller or relay is connected to the following circuits:

- The fuel heater ignition 1 voltage circuit
- The battery voltage circuit
- The glow plug enable circuit located between the ECM and the glow plug relay or controller
- The engine ground circuit
- The glow plug supply voltage circuit located between the glow plug relay/controller and the glow plugs.

On the California Emissions vehicles, the glow plug diagnostic circuit connects directly from the ECM to the glow plug controller. On Federal emissions vehicles, the glow plug diagnostic circuit is spliced to the glow plug enable circuit after the relay.

Accelerator Pedal Position (APP) System Description

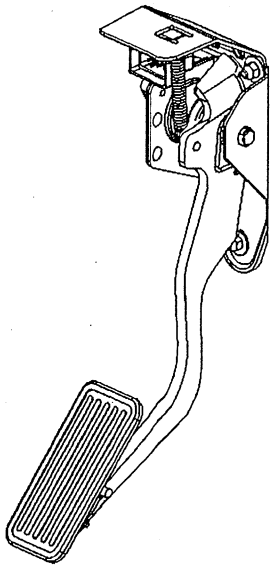

The accelerator pedal position (APP) system along with the vehicle electronics and components is used to calculate and control the amount of acceleration and deceleration via fuel injector control. This eliminates the need for a mechanical cable attachment from the accelerator pedal to a throttle body.

The APP system includes, but is not limited to, the following components :

- The accelerator pedal position (APP) sensor assembly
- The engine control module (ECM)

Accelerator Pedal Position (APP) Sensor

The accelerator pedal position (APP) sensor is mounted on the accelerator pedal control assembly. The sensor is made up of 3 individual sensors within one housing. Three separate signal, low reference, and 5-volt reference circuits are used in order to interface the accelerator pedal sensor assembly with the ECM. Each sensor has a unique functionality to determine pedal position. The ECM uses the APP sensor to determine the amount of acceleration or deceleration desired by the person driving the vehicle. The APP sensor 1 voltage should increase as the accelerator pedal is depressed, from below 1.0 volt at 0 pedal travel to above 2 volts at 100 percent pedal travel. APP sensor 2 voltage should decrease from

above 4 volts at 0 pedal travel to below 3.0 volts at 100 percent pedal travel. APP sensor 3 voltage should decrease from above 3.8 volts at 0 percent pedal travel to below 3.3 volts at 100 percent pedal travel.

Exhaust Gas Recirculation (EGR) System Description

The Exhaust Gas Recirculation (EGR) System is used to reduce the amount of nitrogen oxide (NOx) emission levels caused by high combustion temperatures. At temperatures above 1 371°C (2,500°F), oxygen and nitrogen combine to form oxides of nitrogen (NOx). Introducing small amounts of exhaust gas back into the combustion chamber displaces the amount of oxygen entering the engine. With less oxygen in the air/fuel mixture, the combustion pressures are reduced, and as a result, combustion temperatures are decreased, restricting the formation of NOx.

The EGR valve motor is a direct current (DC) stepper motor utilizing a worm gear that extends from the motor to push on the EGR valve stem. The worm gear is not attached to the valve stem, and can only force the valve open. A return spring is used to force the valve closed.

The mass air flow (MAF) sensor signal is used by the engine control module (ECM) to detect the proper amount of EGR flow. One EGR flow test is performed per ignition cycle. The ECM will close the EGR valve for 5 seconds, then open the EGR valve to 100 percent for 5 seconds. The ECM will then calculate the MAF difference and determine if the proper EGR flow has been detected.

Air Intake System Description

The air intake system is used to direct cool air from the exterior of the engine compartment to the intake manifold. An air cleaner is incorporated into the system to keep dirt from entering the engine. The system also has a turbocharger to increase power, improve driveability and reduce emissions.

Air Cleaner Restriction Indicator

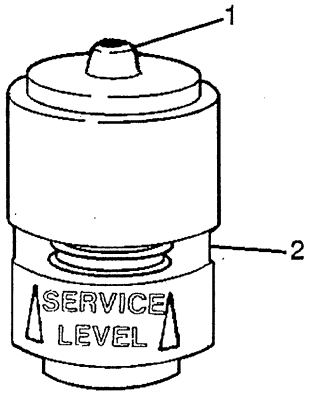

(1) Reset Button
(2) Window

The air cleaner restriction indicator is located on the air cleaner housing.

If the area inside of the clear section is green, no air filter service is required. If the area inside the clear section is orange and Change Air Filter appears, replace the air filter.

Manual High Idle System Description

High Idle System

The diesel engine has a high idle system to improve the warm-up time of the engine in cold weather conditions. This system allows the engine control module (ECM) to increase the idle speed above the normal calibrated value. The ECM increases the idle speed using the following adjustments:

- The fuel injection timing is changed.
- The fuel injection quantity is changed.
- The turbocharger vane position is commanded closed. the vane position will be farther closed than any other normal operating condition.

The instrument panel will indicate the high idle system is active one of two ways:

- The driver information center (DIC) will indicate an active high idle system on light duty trucks.
- An indicator lamp will flash on medium duty trucks.

High Idle Speed Enable and Disable

To enable or disable the high idle system perform the following procedure:

1. Turn the ignition ON, with the engine OFF.
2. Depress the accelerator pedal to the floor and hold down.
3. While the accelerator pedal is depressed, depress the brake pedal 3 times in less than 8 seconds.
4. Release the accelerator pedal.
5. Start the engine.

When the procedure is followed the engine idle speed will slowly increased to the calibrated high idle speed. This is 1200 RPM for light duty, and 1500 RPM for medium duty trucks.

The idle speed will return to normal if any of the following conditions occur:

- There is brake, clutch, or throttle input from the driver.
- The automatic transmission is shifted out of Park or Neutral.
- The air temperature is more than 0°C (32°F).
- The engine coolant temperature (ECT) is more than 68°C (154°F)
- The vehicle speed exceeds 0 km/h (0 mph).

The high idle system will reactivate automatically when the following conditions occur:

- The engine has been idling for more than 30 seconds.
- The transmission is placed in Park or Neutral.
- the vehicle speed is 0 km/h (0 mph).
- The ambient air temperature is less than 0°C (32°F).
- The ECT is less than 68°C (154°F)
- The brake, clutch and throttle pedals are not depressed.

Turbocharger Description and Operation

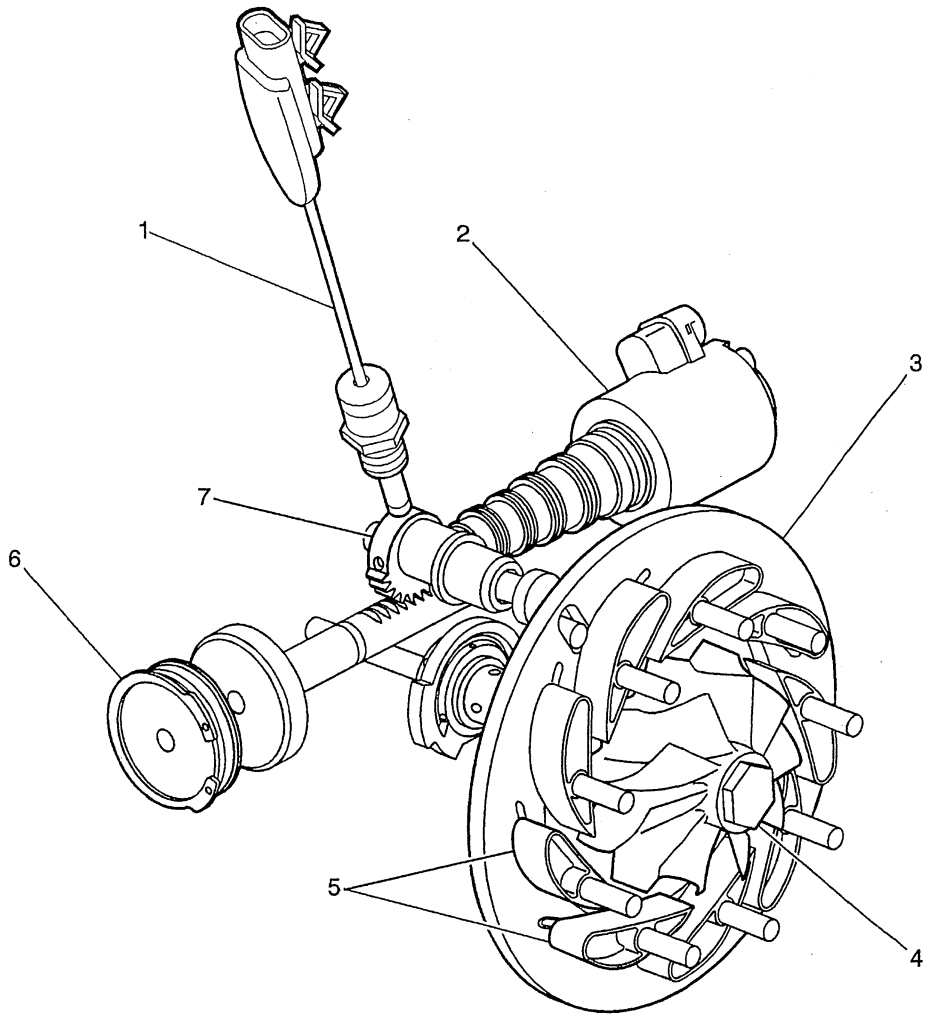

(1) Turbocharger Vane Position Sensor
(2) Turbocharger Vane Position Control Solenoid Valve
(3) Turbocharger Vane Position Unison Ring
(4) Turbine
(5) Turbocharger Vanes
(6) Hydraulic Piston
(7) Cam

The turbocharger increases engine power by pumping compressed air into the combustion chambers, allowing a greater quantity of fuel to combust at the optimal air/fuel ratio. In a conventional turbo, the turbine (4) spins as exhaust gas flows out of the engine and over the turbine blades. This spins the compressor wheel at the other end of the turbine shaft, pumping more air into the intake system.

The turbocharger for this system has vane position control by the engine control module (ECM). The vanes (5) can be opened and closed to vary the amount of boost pressure. Thus, the boost pressure can be controlled independent of engine speed. There are 9 controllable vanes in this turbocharger. The vanes mount to a unison ring (3) that can be rotated to change the vane angle. When the engine is not under load, the vanes are open to minimize boost and exhaust back pressure. To increase boost when the engine load requires it, the vanes are commanded closed. The ECM will vary the boost dependent upon the load requirements of the engine.

The turbocharger vanes are normally open when the engine is not under load. However, the ECM will often close the turbocharger vanes to create back pressure to drive exhaust gas through the exhaust gas recirculation (EGR) valve as required. At extreme cold temperatures, the ECM may close the vanes at low load conditions in order to accelerate engine coolant heating. The ECM may also close the turbocharger vanes under exhaust braking conditions.

The turbocharger control system utilizes the following components:

Turbocharger Vane Position Control Solenoid Valve

The vane position control solenoid valve (2) works in conjunction with oil pressure to control the turbocharger vanes. The solenoid valve uses 2 circuits; a control circuit and a low reference circuit. The engine control module (ECM) uses a pulse width modulation on the HI control circuit to control the solenoid valve. The ECM will control the solenoid valve to allow the engine oil pressure (EOP) to move a piston (6). This piston rotates the unison ring, thus controlling the engine boost dependant upon engine load.

Turbocharger Vane Position Sensor

The vane position sensor (1) uses 3 circuits: a 5-volt reference circuit, a low reference circuit, and a signal circuit. The engine control module (ECM) provides the sensor with 5 volts on the 5-volt reference circuit and a ground on the low reference circuit. Movement of the sensor from the open vane position to the closed vane position provides the ECM with a signal voltage through the position sensor signal circuit that ranges from 1 volt with the turbocharger vanes open to 3.5 volts with the turbocharger vanes completely closed.

Engine Control Module (ECM)

The engine control module (ECM) controls all turbocharger control functions. The ECM monitors information from various sensor inputs that include the following:

- The accelerator pedal position (APP) sensor
- The engine coolant temperature (ECT) sensor
- The mass airflow (MAF) sensor
- The intake air temperature (IAT) sensor
- The vehicle speed sensor (VSS)
- The transmission gear position or range information sensors
- The boost pressure sensor

Engine Controls – 8.1L

Ignition System Specifications

Application	Specification	
	Metric	English
Firing Order	1-8-7-2-6-5-4-3	
Spark Plug Wire Resistance	1,000 ohms per ft	
Spark Plug Torque	20 N·m	15 lb ft
Spark Plug Gap	1.52 mm	0.060 in
Spark Plug Type	TJ14R-P15 Denso plug type	

Fastener Tightening Specifications

Application	Specifications	
	Metric	English
Accelerator Pedal Bolt	9 N·m	80 lb in
Air Cleaner Resonator Outlet Duct Clamp	4 N·m	35 lb in
Brake Pipe Fitting	25 N·m	18 lb ft
Camshaft Position (CMP) Sensor Bolt	12 N·m	106 lb in
Crankshaft Position (CKP) Sensor Bolt	12 N·m	106 lb in
Electro-Hydraulic Control Unit Bracket Bolt	25 N·m	18 lb ft
Engine Coolant Temperature (ECT) Sensor	50 N·m	37 lb ft
Engine Shield Bolt	20 N·m	15 lb ft
Engine Wire Harness Bolt/Stud	10 N·m	89 lb in
Evaporative Emission (EVAP) Canister Nut	25 N·m	18 lb ft
Evaporative Emission (EVAP) Canister Purge Valve Bolt	10 N·m	89 lb in
Evaporative Emission (EVAP) Canister Vent Solenoid Bracket Bolt	12 N·m	106 lb in
Fuel Feed and EVAP Bundle Nut	12 N·m	106 lb in
Fuel Fill Pipe Clamp	2.5 N·m	22 lb in
Fuel Pipe Bracket Nut	10 N·m	89 lb in
Fuel Rail Stud	12 N·m	106 lb in
Fuel Tank Filler Housing to Body Screw	2.3 N·m	20 lb in
Fuel Tank Filler Pipe Housing to Fuel Tank Fill Pipe Screw	2.3 N·m	20 lb in
Fuel Tank Ground Strap Bolt	9 N·m	80 lb in
Fuel Tank Shield Bolt	18 N·m	13 lb ft
Fuel Tank Strap Bolt	40 N·m	30 lb ft
Heated Oxygen Sensor (HO2S)	42 N·m	31 lb ft
Ignition Coil Bolt	12 N·m	106 lb in
Knock Sensor	20 N·m	15 lb ft
Manifold Absolute Pressure (MAP) Sensor Bolt	12 N·m	106 lb in
Mass Air Flow (MAF)/Intake Air Temperature (IAT) Sensor Clamp	7 N·m	62 lb in
Powertrain Control Module (PCM) Electrical Connector Bolt	8 N·m	71 lb in
Spark Plug (Existing Head)	20 N·m	15 lb ft
Spark Plug (New Head)	30 N·m	22 lb ft
Throttle Actuator Control Module Bracket Nut	9 N·m	80 lb in
Throttle Actuator Control Module Nut	9 N·m	80 lb in
Throttle Body Nut	10 N·m	89 lb in

Exhaust System

Fastener Tightening Specifications

Application	Specification	
	Metric	English
Catalytic Converter Coupling Nut	45 N·m	33 lb ft
Exhaust Gas Recirculation (EGR) Cooler Tube Nut (6.6L)	30 N·m	20 lb ft
Exhaust Hanger Bracket Bolt	12 N·m	106 lb in
Exhaust Heat Shield Bolt (Body Panel)	9 N·m	80 lb in
Exhaust Heat Shield Nut (Body Panel)	9 N·m	80 lb in
Exhaust Manifold Bolts (4.8L, 5.3L, and 6.0L)		
• First Pass	15 N·m	11 lb ft
• Final Pass	25 N·m	18 lb ft
Exhaust Manifold Bolt/Nut (6.6L)	34 N·m	25 lb ft
Exhaust Manifold Bolt/Stud (4.3L)	30 N·m	22 lb ft
Exhaust Manifold Center Bolt (8.1L)	35 N·m	26 lb ft
Exhaust Manifold Heat Shield Bolt (4.3L, 4.8L, 5.3L, and 6.0L)	9 N·m	80 lb in
Exhaust Manifold Heat Shield Bolt (6.6L)	8 N·m	71 lb in
Exhaust Manifold Heat Shield Bolt/Nut (8.1L)	25 N·m	18 lb ft
Exhaust Manifold Nut (8.1L)	16 N·m	12 lb ft
Exhaust Manifold Pipe Nut	50 N·m	37 lb ft
Exhaust Muffler Hanger Nut	50 N·m	39 lb ft
Exhaust Muffler Nut	40 N·m	30 lb ft
Exhaust Outlet Pipe Clamp (6.6L)	15 N·m	11 lb ft
Exhaust Outlet to Right Exhaust Pipe Bracket Bolt (6.6L)	34 N·m	25 lb ft
Exhaust Pipe Clamp	44 N·m	33 lb ft
Exhaust Pipe Hanger Bracket Bolt	12 N·m	106 lb in
Exhaust Pipe Hanger Bracket Bolt (4L60-E)	17 N·m	13 lb if
Exhaust Pipe Heat Shield Bolt (6.6L)	8 N·m	71 lb in
Exhaust Pipe to Manifold Bolt (6.6L)	53 N·m	39 lb ft
Exhaust Pipe to Turbocharger Bolt (6.6L)	53 N·m	39 lb ft
Hood Hinge Bolt	25 N·m	18 lb ft
Intake Manifold Cover Clamp (6.6L)	6 N·m	53 lb in
Oil Level Indicator Tube Bracket Bolt (6.6L)	21 N·m	15 lb ft
Outlet Duct Clamp	6 N·m	53 lb in
Oxygen Sensor	42 N·m	31 lb ft
Rear Shock Absorber Lower Bolt	95 N·m	70 lb ft
Spark Plug (4.3L)	15 N·m	11 lb ft
Spark Plug Wire Retainer Bolt (4.3L)	12 N·m	106 lb in
Transmission Bolt	100 N·m	74 lb ft
Transmission Fluid Fill Tube Nut (6.6L)	18 N·m	13 lb ft
Transmission Mount to Support Nut	40 N·m	30 lb ft
Transmission Support Crossmember Bolt	95 N·m	70 lb ft
Turbocharger Exhaust Pipe Bolt/Nut (6.6L)	53 N·m	39 lb ft
Turbocharger Exhaust Pipe Heat Shield Bolt (6.6L)	8 N·m	71 lb in
Turbocharger Heat Shield Bolt (6.6L)	9 N·m	80 lb in

Exhaust System Description

Important

Use of non-OEM parts may cause driveability concerns.

The exhaust system design varies according to the model designation and the intended use of the vehicle.

In order to secure the exhaust pipe to the exhaust manifold, the exhaust system utilizes a flange and seal joint coupling. A flange and gasket coupling secures the catalytic converter assembly to the muffler assembly.

Hangers suspend the exhaust system from the underbody, allowing some movement of the exhaust system and disallowing the transfer of noise and vibration into the vehicle.

Heat shields protect the vehicle from the high temperatures generated by the exhaust system.

Resonator

Some exhaust systems are equipped with a resonator. The resonator, located either before or after the muffler, allows the use of mufflers with less back pressure. Resonators are used when vehicle characteristics require specific exhaust tuning.

Catalytic Converter

The catalytic converter is an emission control device added to the engine exhaust system in order to reduce hydrocarbons (HC), carbon monoxide (CO), and oxides of nitrogen (NOx) pollutants from the exhaust gas.

The catalytic converter is comprised of a ceramic monolith substrate, supported in insulation and housed within a sheet metal shell. The substrate may be washcoated with 3 noble metals:

- Platium (Pt)
- Palladium (Pd)
- Rhodium (Rh)

The catalyst in the converter is not serviceable.

Muffler

The exhaust muffler reduces the noise levels of the engine exhaust by the use of tuning tubes. The tuning tubes create channels inside the exhaust muffler that lower the sound levels created by the combustion of the engine.

Transmission/Transaxle Description and Operation

Manual Transmission - NV 3500

Fastener Tightening Specifications

Application	Specification	
	Metric	English
Back-up Lamp Switch	37 N·m	27 lb ft
Case Housing Bolts	35 N·m	26 lb ft
Clutch Actuator Cylinder Bolt	8 N·m	71 lb in
Control Lever Boot Screw	1.6 N·m	14 lb in
Input Shaft Bearing Retainer Bolts	14 N·m	124 lb in
Main Shaft Rear Bearing Retainer Bolts	22 N·m	16 lb ft
Oil Drain and Fill Plugs	30 N·m	22 lb ft
Reverse Idler Gear Shaft Support Bolts	22 N·m	16 lb ft
Shift Lever Assembly Nut	37 N·m	27 lb ft
Shift Lever Bolt	20 N·m	15 lb ft
Shift Shaft Detent Pin	25 N·m	18 lb ft
Shift Tower Bolts	12 N·m	106 lb in
Transmission Cover Bolt	9 N·m	80 lb in
Transmission Mount Bolt	50 N·m	37 lb ft
Transmission Mount to Crossmember Nut	40 N·m	30 lb ft
Vehicle Speed Sensor	16 N·m	12 lb ft

Lubrication Specifications

Application	Specification	
	Metric	English
2WD: Synchromesh Transmission Fluid GM P/N 12345349 (Canadian P/N 10953465)	2.3 liters	2.5 quarts
4WD: Synchromesh Transmission Fluid GM P/N 12345349 (Canadian P/N 10953465)	2.0 liters	2.2 quarts

Description and Operation

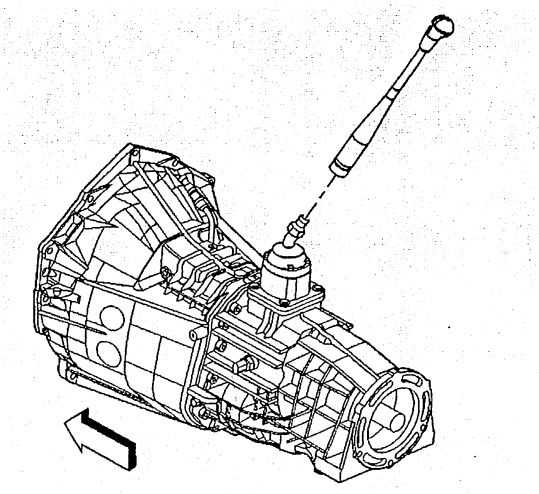

The New Venture Gear NV3500 (85 mm) is a 5 speed manual transmission used on light duty truck with 4.3 L engine. This manual transmission is identified by the RPO's M50 and MG5. The reason for 2 different RPO codes is because of the different first speed gear ratios that the transmission can contain. The shift assembly design inside the transmission for NV3500 installed on C/K trucks are different from that of NV3500 transmissions that are installed in smaller S/T trucks. The 85 mm is the distance between

EPA	Environmental Protection Agency
EPR	Exhaust Pressure Regulator
EPROM	Erasable Programmable Read Only Memory
ESB	Expansion Spring Brake
ESC	Electronic Suspension Control
ESD	Electrostatic Discharge
ESN	Electronic Serial Number
ETC	Electronic Throttle Control, Electronic Temperature Control, Electronic Timing Control
ETCC	Electronic Touch Climate Control
ETR	Electronically Tuned Receiver
ETS	Enhanced Traction System
EVAP	Evaporative Emission
EVO	Electronic Variable Orifice
Exh	Exhaust
F	
°F	Degrees Fahrenheit
FC	Fan Control
FDC	Fuel Data Center
FED	Federal All United States except California
FEDS	Fuel Enable Data Stream
FEX	Front Exchanger
FF	Flexible Fuel
FFH	Fuel-Fired Heater
FI	Fuel Injection
FMVSS	Federal U.S. Motor Vehicle Safety Standards
FP	Fuel Pump
ft	Foot/Feet
FT	Fuel Trim
F4WD	Full Time Four-Wheel Drive
4WAL	Four-Wheel Antilock
4WD	Four-Wheel Drive
FW	Flat Wire
FWD	Front Wheel Drive, Forward
G	
g	Grams, Gravitational Acceleration
GA	Gage, Gauge
gal	Gallon
gas	Gasoline
GCW	Gross Combination Weight
Gen	Generator
GL	Gear Lubricant
GM	General Motors
GM SPO	General Motors Service Parts Operations
gnd	Ground
gpm	Gallons per Minute
GRN	Green
GRY	Gray
GVWR	Gross Vehicle Weight Rating

Cyl	Cylinder(s)
	D
DAB	Delayed Accessory Bus
dB	Decibels
dBA	Decibels on A-weighted Scale
DC	Direct Current, Duty Cycle
DCM	Door Control Module
DE	Drive End
DEC	Digital Electronic Controller
DERM	Diagnostic Energy Reserve Module
DI	Distributor Ignition
dia	Diameter
DIC	Driver Information Center
Diff	Differential
DIM	Dash Integration Module
DK	Dark
DLC	Data Link Connector
DMCM	Drive Motor Control Module
DMM	Digital Multimeter
DMSDS	Drive Motor Speed and Direction Sensor
DMU	Drive Motor Unit
DOHC	Dual Overhead Camshafts
DR, Drvr	Driver
DRL	Daytime Running Lamps
DTC	Diagnostic Trouble Code
	E
EBCM	Electronic Brake Control Module
EBTCM	Electronic Brake and Traction Control Module
EC	Electrical Center, Engine Control
ECC	Electronic Climate Control
ECI	Extended Compressor at Idle
ECL	Engine Coolant Level
ECM	Engine Control Module, Electronic Control Module
ECS	Emission Control System
ECT	Engine Coolant Temperature
EEPROM	Electrically Erasable Programmable Read Only Memory
EEVIR	Evaporator Equalized Values in Receiver
EFE	Early Fuel Evaporation
EGR	Exhaust Gas Recirculation
EGR TVV	Exhaust Gas Recirculation Thermal Vacuum Valve
EHPS	Electro-Hydraulic Power Steering
EI	Electronic Ignition
ELAP	Elapsed
ELC	Electronic Level Control
E/M	English/Metric
EMF	Electromotive Force
EMI	Electromagnetic Interference
Eng	Engine
EOP	Engine Oil Pressure
EOT	Engine Oil Temperature

BTDC	Before Top Dead Center
BTM	Battery Thermal Module
BTSI	Brake Transmission Shift Interlock
Btu	British Thermal Units
	C
°C	Degrees Celsius
CAC	Charge Air Cooler
CAFE	Corporate Average Fuel Economy
Cal	Calibration
Cam	Camshaft
CARB	California Air Resources Board
CC	Coast Clutch
cm^3	Cubic Centimeters
CCM	Convenience Charge Module, Chassis Control Module
CCOT	Cycling Clutch Orifice Tube
CCP	Climate Control Panel
CD	Compact Disc
CE	Commutator End
CEAB	Cold Engine Air Bleed
CEMF	Counter Electromotive Force
CEX	Cabin Exchanger
cfm	Cubic Feet per Minute
cg	Center of Gravity
CID	Cubic Inch Displacement
CKP	Crankshaft Position
CKT	Circuit
C/Ltr	Cigar Lighter
CL	Closed Loop
CLS	Coolant Level Switch
CMC	Compressor Motor Controller
CMP	Camshaft Position
CNG	Compressed Natural Gas
CO	Carbon Monoxide
CO2	Carbon Dioxide
Coax	Coaxial
COMM	Communication
Conn	Connector
CPA	Connector Position Assurance
CPP	Clutch Pedal Position
CPS	Central Power Supply
CPU	Central Processing Unit
CRT	Cathode Ray Tube
CRTC	Cathode Ray Tube Controller
CS	Charging System
CSFI	Central Sequential Fuel Injection
CTP	Closed Throttle Position
cu ft	Cubic Foot/Feet
cu in	Cubic Inch/Inches
CV	Constant Velocity Joint
CVRSS	Continuously Variable Road Sensing Suspension

Abbreviations and Meanings

Abbreviation	Meaning
A	
A	Ampere(s)
ABS	Antilock Brake System
A/C	Air Conditioning
AC	Alternating Current
ACC	Accessory, Automatic Climate Control
ACL	Air Cleaner
ACR4	Air Conditioning Refrigerant, Recovery, Recycling, Recharging
AD	Automatic Disconnect
A/D	Analog to Digital
ADL	Automatic Door Lock
A/F	Air/Fuel Ratio
AH	Active Handling
AIR	Secondary Air Injection
ALC	Automatic Level Control, Automatic Lamp Control
AM/FM	Amplitude Modulation/Frequency Modulation
Ant	Antenna
AP	Accelerator Pedal
APCM	Accessory Power Control Module
API	American Petroleum Institute
APP	Accelerator Pedal Position
APT	Adjustable Part Throttle
ASM	Assembly, Accelerator and Servo Control Module
ASR	Acceleration Slip Regulation
A/T	Automatic Transmission/Transaxle
ATC	Automatic Transfer Case, Automatic Temperature Control
ATDC	After Top Dead Center
ATSLC	Automatic Transmission Shift Lock Control
Auto	Automatic
avg	Average
A4WD	Automatic Four-Wheel Drive
AWG	American Wire Gage
B	
B+	Battery Positive Voltage
BARO	Barometric Pressure
BATT	Battery
BBV	Brake Booster Vacuum
BCA	Bias Control Assembly
BCM	Body Control Module
BHP	Brake Horsepower
BLK	Black
BLU	Blue
BP	Back Pressure
BPCM	Battery Pack Control Module
BPMV	Brake Pressure Modulator Valve
BPP	Brake Pedal Position
BRN	Brown

- Tow/haul is designed to be most effective when the vehicle and trailer combined weight is at least 75 percent of the gross combined weight rating (GCWR) of the vehicle.
- Operation of tow/haul in a lightly loaded or non-loaded vehicle will not cause damage. However, there is no benefit to the selection of tow/haul when the vehicle is unloaded. This situation will cause a firm shift. The tow/haul switch is not a performance switch.
- Selection of tow/haul when unloaded may result in unpleasant engine and transmission driving characteristics and reduced fuel economy. Tow/haul is recommended only when pulling a heavy trailer or a large or heavy load.

Activation

- Tow/Haul is selected or de-selected via a switch on the end of the transmission shift lever. A light on the instrument panel will illuminate to indicate that tow/haul has been selected.
- Tow/Haul must be selected again, every time the vehicle is started, if desired.

Hydraulic System

A common hydraulic system serves the torque converter and the transmission. Transmission fluid for all hydraulic operations, lubrication, and cooling comes from the sump and is supplied by the charging pump.

Transmission Fluid Filtration

Fluid filtration is provided by two filter systems. A suction filter, located in the sump, provides general protection to the entire hydraulic system by filtering large particulates. A spin-on filter provides full-time protection for the control solenoids and multipass protection for the entire system. The spin-on filter is externally located on the converter housing at the lower left front of the transmission.

Electro-Hydraulic Control Valve Assembly

The control valve assembly consists of two components. The main valve body contains the trim valves, the torque converter clutch (TCC) valve, the exhaust backfill valve, and the control main relief valve. The shift valve body contains the shift valves, the control main pressure valve, and the manual selector valve. The control valve assembly attaches to the bottom of the gearbox module and is enclosed by the oil pan.

Remote Oil Cooler Provision

Ports for remote-mount oil cooler lines are located on the right side of the converter housing near the converter housing/main housing splitline. Remote oil-to-water coolers require plumbing for transmission fluid and engine-cooling water. Remote oil-to-air coolers may also be used and only transmissions fluid lines need to be provided. Heat is transferred from the transmission fluid to either water or air depending upon the cooler type used.

Fill Tube/Dipstick Provision

All 1000 Series models have a fill tube/dipstick provision on both sides of the transmission. The fill tube and dipstick are OEM-installed and adapted as specified by the vehicle manufacturer. A plug is installed in the unused location.

Park Pawl

All 1000 Series transmissions have a PARK pawl. The internal parking pawl is engaged by selection of the PARK position on the shift selector.

PTO Provision

The 1000 Series transmissions have a provision to mount and drive a power takeoff (PTO) unit on the left and/or right side of the transmission housing. The torque converter turbine drives the optional PTO drive gear. The PTO reflects engine and torque converter characteristics. The vehicle manufacturer and/or body builder provides PTO units and associated controls.

Output Yoke/Flange

A variety of output yokes or flanges are available to meet vehicle driveline requirements. Yokes or flanges are OEM-installed and are adapted as specified by the vehicle manufacturer.

Tow/Haul Mode

Tow/Haul mode significantly changes the transmission shift pattern to reduce shift cycling and to deliver better performance, control, and cooling when towing or hauling heavy loads. For instance:

- Upshift points are raised at light to mid throttle position to use more of the available engine power for acceleration. Downshift points are raised to enhance engine braking to help slow the vehicle.
- During deceleration, the torque converter clutch (TCC) remains applied at closed throttle at lower speeds to significantly improve the effect of engine braking.
- During acceleration, the TCC is applied in 2nd range and remains applied in 3rd, 4th, and 5th. This improves the drivetrain efficiency and significantly lowers transmission sump temperature when towing heavy loads. In Normal mode, the TCC generally applies only in higher ranges and is dependent on throttle position.

Fluid Capacity Specifications

Condition	Liters	Quarts
(approximate)		
Fill After Rebuild	12.0	12.7
Fill After Fluid and Filter Change	7.0	7.4

Description and Operation

Allison 1000 Series Transmissions are torque converter driven, fully automatic, transmission systems. The 1000 Series transmissions have up to five forward speeds, neutral, and reverse. The fifth range has an overdrive gear ratio. The 1000 Series incorporates a variety of standard and optional design features. These design features are:

- Direct mount to engine block
- Flexplate drive
- Torque converter with a torque converter clutch (TCC) and integral vibration damper
- Three constant-mesh, planetary gear sets with helical gears
- Five multiple disk clutches--two rotating and three stationary
- Common hydraulic system for all transmission functions
- Two transmission fluid filtration systems
- Electro-Hydraulic Control Valve Assembly
- Electronically controlled automatic gear selection and clutch apply
- Provision for remote transmission fluid cooler
- Fill tube/dipstick provision on both sides of transmission
- Parking pawl
- Power takeoff (PTO) provision on both sides of transmission
- Variety of available output yokes or flanges

Component and System Description

Engine/Transmission Connection

The converter housings of 1000 Series transmissions mate directly to the engine block. Flexplate drive is used for engine-to-transmission torque transfer.

Torque Converter

Several torque converters are available to match the transmissions to a wide variety of diesel and gasoline engines. The torque converter is a single-stage, polyphase, and three-element unit, consisting of a pump, stator, and turbine. At lower output speeds, the torque converter multiplies torque and provides a fluid coupling to the engine. At higher speeds, the torque converter clutch (TCC) is automatically engaged to provide direct drive from the engine to the transmission. Hydraulic fluid for converter charging pressure comes from the sump and is supplied by the input pump. The torque converter clutch is applied or released by changing direction of fluid in the torque converter. An integral converter damper minimizes the need for additional engine vibration control.

Gear Sets

The planetary gear train includes three constant-mesh planetary gear sets containing helical gears. By the engagement of the clutches in various combinations, the planetary sets act singly or together to provide five forward ranges, neutral, and reverse.

Clutches

Five clutches (two rotating and three stationary) direct the flow of torque through the transmission. All range clutches are hydraulically actuated and spring-released, with automatic wear compensation. The transmission fluid cools the clutches. The transmission control module (TCM) signals solenoid valves to apply and release clutches based on speed and power combinations and the range selected by the operator.

Automatic Transmission - Allison

Transmission General Specifications

Name	Allison 1000 Series
First Range Ratio	3.10:1
Second Range Ratio	1.81:1
Third Range Ratio	1.41:1
Fourth Range Ratio	1.00:1
Fifth Range Ratio	0.71:1
Reverse Range Ratio	-4.49:1
Transmission Fluid Type	DEXRON® III
Maximum Gross Combined Weight (GCW)	11 800 kg (26,000 lb)*
Maximum Gross Vehicle Weight (GVW)	9 000 kg (19,850 lb)*
* Or Vehicle Manufacturers Chassis Rating, whichever is less	

Fastener Tightening Specifications

Application	Specification	
	Metric	English
Control Module Cover to Radiator Shroud Bolts	9 N·m	80 lb in
Control Valve Assembly to Main Housing Bolts	12 N·m	108 lb in
Converter Housing to Front Support Assembly Bolts	56 N·m	41 lb ft
Detent Lever Retaining Nut	29 N·m	21 lb ft
Detent Spring Assembly to Main Valve Body Bolts	12 N·m	108 lb in
Filler Tube Bracket to Transmission Nuts	18 N·m	13 lb ft
Fuel Line Bracket to Transmission Nut	18 N·m	13 lb ft
Fuel Line Retainer to Transmission Bolts	2.5 N·m	22 lb in
Heat Shield to Transmission Bolts	17 N·m	13 lb ft
Heat Shield to Transmission Nut	25 N·m	18 lb ft
Hydraulic Connector Assembly	25 N·m	18 lb ft
Input Speed Sensor to Torque Converter Housing Bolt	12 N·m	108 lb in
Main Pressure Tap Plug	12 N·m	108 lb in
Oil Cooler Line Clip to Oil Pan Nut	9 N·m	80 lb in
Oil Cooler to Radiator Brace Bolts	12 N·m	106 lb in
Oil Pan Drain Plug	35 N·m	26 lb ft
Oil Pan to Main Housing Bolts	27 N·m	20 lb ft
Output Speed Sensor to Rear Cover Bolt	12 N·m	108 lb in
PNP Switch to Main Housing Bolts	27 N·m	20 lb ft
Transmission Fluid Pressure Switch to Main Valve Body Bolts	12 N·m	108 lb in
PTO Cover to Main Housing Bolts	43 N·m	32 lb ft
Shift Cable Bracket to Transmission Bolts	25 N·m	18 lb ft
Shift Cable Support to Steering Column Brace Bolt	10 N·m	89 lb in
Shift Lever to Shift Selector Shaft Nut	24 N·m	18 lb ft
Shipping Bracket to Torque Converter Housing Bolts	27 N·m	20 lb ft
Shipping Bracket to Torque Converter Lug Bolts	27 N·m	20 lb ft
Torque Converter to Flywheel Bolts	60 N·m	44 lb ft
Torque Converter Housing Inspection Cover to Transmission Bolts	10 N·m	89 lb in
Transmission Mount to Adapter Bolts (4WD)	47 N·m	35 lb ft
Transmission Mount to Transmission Bolts (2WD)	50 N·m	37 lb ft
Transmission Mount to Transmission Support Nuts	40 N·m	30 lb ft
Transmission Support to Frame Nuts and Bolts	70 N·m	52 lb ft
Transmission to Engine Studs and Bolts	50 N·m	37 lb ft
Turbine Speed Sensor to Main Housing Bolt	12 N·m	108 lb in
Yoke Assembly to Output Shaft Bolt	123 N·m	91 lb ft

Application	Specification	
	Metric	English
Speed Sensor and Bracket Assembly to Case	11 N·m	97 lb in
Transmission Case to Engine	44 N·m	32 lb ft
Valve Body to Case/Lube Pipe	11 N·m	97 lb in
Valve Body to Case/PSM	11 N·m	97 lb in

Fluid Capacity Specifications Overhaul

Application	Specification	
	Metric	English
Oil Pan Removal	7.3 liters	7.7 quarts
Overhaul	12.8 liters	13.5 quarts

Transmission General Description

The 4L80-E is a fully automatic rear wheel drive electronically controlled transmission. The 4L80-E provides four forward ranges including overdrive and reverse. A gear type of oil pump controls shift points. The VCM/PCM and the pressure control (PC) solenoid (force motor) regulate these shift points. The VCM/PCM also controls shift schedules and TCC apply rates. Transmission temperature also influences shift schedules and TCC apply rates.

You can operate the transmission in any one of the following seven modes:

- P - PARK position prevents the vehicle from rolling either forward or backward on vehicles less than 15,000 G.V.W. For safety reasons, use the parking brake in addition to the park position.
- R - REVERSE allows the vehicle to be operated in a rearward direction.
- N - NEUTRAL allows the engine to be started and operated while driving the vehicle. If necessary, you may select this position in order to restart the engine with the vehicle moving.
- OD - OVERDRIVE is used for all normal driving conditions. Overdrive provides four gear ratios plus a converter clutch operation. Depress the accelerator in order to downshift for safe passing.
- D - DRIVE position is used for city traffic, and hilly terrain. Drive provides three gear ranges. Depress the accelerator in order to downshift.
- 2 - Manual SECOND provides acceleration and engine braking or greater traction from a stop. When you choose manual SECOND, the vehicle will start out in first gear and upshift to second gear. You may select this gear at a vehicle speed of up to 22 km/h (35 mph).
- 1 - Manual LOW provides maximum engine braking. You may select this gear at a vehicle speed of up to 13 km/h (20 mph).

Automatic Transmission – 4L80E

Transmission General Specifications

Name	Hydra-matic 4L80-E
RPO Codes	MT1
Production Location	Ypsilanti, MI
Vehicle Platform (Engine/Transmission) Usage	C/K, C/K 800, G, P32/42
Transmission Drive	Longitudinally Mounted Rear Wheel Drive
1st Gear Ratio	2.482:1
2nd Gear Ratio	1.482:1
3rd Gear Ratio	1.000:1
4th Gear Ratio	0.750:1
Reverse	2.077:1
Torque Converter Size (Diameter of Torque Converter Turbine)	310 mm
Pressure Taps	Line Pressure
Transmission Fluid Type	DEXRON® III
Transmission Fluid Capacity (Approximate)	Bottom Pan Removal: 7.3L (7.7 qts) Dry: 12.8L (13.5 qts)
Transmission Type: 4	Four Forward Gears
Transmission Type: L	Longitudinal Mount
Transmission Type: 80	Product Series
Transmission Type: E	Electronic Controls
Position Quadrant	P, R, N, Overdrive, D, 2, 1
Case Material	Die Cast Aluminum
Transmission Weight Dry	107 kg (236 lbs)
Transmission Weight Wet	118 kg (260 lbs)
Maximum Trailer Towing Capacity	9,525 kg (21,000 lbs)
Maximum Gross Vehicle Weight (GVW)	7,258 kg (16,000 lbs)

Fastener Tightening Specifications

Application	Specification	
	Metric	English
Accumulator Housing to Valve Body	11 N·m	97 lb in
Case Center Support	44 N·m	32 lb ft
Control Valve Assembly to Case	11 N·m	97 lb in
Cooler Pipe Connector Nut at Case and Radiator	38 N·m	28 lb ft
Engine Rear Mount to Transmission Bolt	44 N·m	32 lb ft
Engine Rear Support Bracket to Frame Nut	44 N·m	32 lb ft
Extension Housing to Case	34 N·m	25 lb ft
Flywheel Housing Cover to Transmission	7 N·m	62 lb in
Flywheel to Converter	44 N·m	32 lb ft
Fourth Clutch	23 N·m	17 lb ft
Manual Shaft to Detent Lever Nut	24 N·m	18 lb ft
Oil Pan Drain Plug	34 N·m	25 lb ft
Oil Pan to Case	24 N·m	18 lb ft
Oil Test Hole Plug	11 N·m	97 lb in
Parking Pawl Bracket to Case	24 N·m	18 lb ft
Pressure Control Solenoid Bracket to Valve Body	8 N·m	71 lb in
Pump Assembly to Case	24 N·m	18 lb ft
Pump Body to Cover	24 N·m	18 lb ft
Rear Servo Cover to Case	24 N·m	18 lb ft
Solenoid to Valve Body	8 N·m	71 lb in

- Lo and reverse clutch assembly
- Two planetary gear sets: Input and Reaction
- Oil pump assembly
- Control valve body assembly

The electrical components of the 4L60-E are as follows:

- 1-2 and 2-3 shift solenoid valves
- 3-2 shift solenoid valve assembly
- Transmission pressure control (PC) solenoid
- Torque converter clutch (TCC) solenoid valve
- TCC pulse width modulation (PWM) solenoid valve
- Automatic transmission fluid pressure (TFP) manual valve position switch
- Automatic transmission fluid temperature (TFT) sensor
- Vehicle speed sensor assembly

Adapt Function

Transmission Adapt Function

The 4L60-E transmission uses a line pressure control system, which has the ability to continuously adapt the system's line pressure. This compensates for normal wear of the following parts:

- The clutch fiber plates
- The seals
- The springs

The PCM maintains the Upshift Adapt parameters for the transmission The PCM monitors the AT ISS sensor and the AT OSS during commanded shifts in order to determine if a shift is occurring too fast or too slow. The PCM adjusts the signal from the transmission pressure control solenoid in order to maintain a set shift feel.

Transmission adapts must be reset whenever the transmission is overhauled or replaced.

Automatic Transmission Shift Lock Control Description

The automatic transmission shift lock control is a safety device that prevents an inadvertent shift out of PARK when the ignition is ON. The driver must press the brake pedal before moving the shift lever out of the PARK position. The system consist of the following components:

- The automatic transmission shift lock control solenoid.
- The automatic transmission shift lock control switch.
- The park/neutral position switch.

With the ignition in the ON position battery positive voltage is supplied to the park/neutral position switch. With the transmission in the PARK position the contacts in the park/neutral position switch are closed. This allows current to flow through the switch to the automatic transmission shift lock control switch. The circuit continues through the normally-closed switch to the automatic transmission shift lock control solenoid. The automatic transmssion shift lock control soleniod is permanently grounded. This energizes the automatic transmission shift lock control solenoid, locking the shift linkage in the PARK position. When the driver presses the brake pedal the contacts in the automatic transmission shift lock control switch open, causing the automatic transmission shift lock control solenoid to release. This allows the shift lever to move from the PARK position.

Secondary Fluid Pump Assembly Specifications (M33 Only)

Application	Specification	
	Metric	English
Pump		
• Type	Gerotor - Internal/External Gear	
• Weight	0.589 kg	1.3 lb
• Pump Deliver	2.5 lpm +/-0.1 @ 93.3°C (200°F)	0.5-1.3 gpm +/- 0.026 @ 93.3°C (200°F)
• Pressure	110.3-275.7 kPa +/- 3.44	16-40 psi +/-0.5
Relief Pressure		
• Minimum	550 kPa	79.7 psi
• Maximum	900 kPa	130.5 psi
Operating Temperature		
• Minimum	21°C	69.8°F
• Maximum	104°C	219.2°F
Motor		
Operating Voltage		
• Maximum	14.5 Volts	
• Minimum	11 Volts	
• Operating Range	14.5-13.5 Volts	
• Maximum Current	10 amp	
• Nominal Current Load	4.464 amp	
• Terminal/Winding Resistance	0.0-0.937 ohms	

Fluid Capacity Specifications

Application	Specification	
	Metric	English
Bottom Pan Removal	4.7 liters	5 quarts
Complete Overhaul	10.6 liters	11 quarts
(measurements are approximate)		

Transmission Component and System Description

The 4L60E transmission consists primarily of the following components:

- A torque converter with an electronically controlled capacity clutch (ECCC) This transmission is equipped with an ECCC. The pressure plate does not fully lock to the torque converter cover. Instead, the pressure plate maintains a small amount of slippage, about 20 RPM, in SECOND, THIRD, and FOURTH gears, depending on the vehicle application. ECCC was developed to reduce the possibility of noise, vibration, or chuggle caused by TCC apply. Typical apply speeds are 49-52 km/h (30-32 mph) in THIRD gear and 65-73 km/h (40-45 mph) in FOURTH gear. Full lockup is available at highway speeds on some applications.
- Servo assembly and 2-4 band assembly
- Reverse input clutch and housing
- Overrun clutch
- Forward clutch
- 3-4 clutch
- Forward sprag clutch assembly
- Lo and reverse roller clutch assembly

Description of Usage	Specification	
	Metric	English
Input Speed Sensor Hole Plug to Pump Cover	9-11 N·m	80-97 lb in
Input Speed Sensor to Pump Cover	9-11 N·m	80-97 lb in
Line Pressure Test Hole Plug	8-14 N·m	71-124 lb in
Manual Shaft to Detent Lever Nut	27-34 N·m	20-25 lb ft
Oil Cooler Pipe Fitting	20 +/- 2 N·m	15 lb ft
Oil Pan to Case	16 N·m	11.8 lb ft
Oil Passage Cover (Spacer Plate Support) to Case	8-14 N·m	71-124 lb in
Oil Passage Cover (Spacer Plate Support) to Case	8-14 N·m	71-124 lb in
Park Lock Bracket to Case	27-34 N·m	20-25 lb ft
Plate to Case (Shipping)	27-34 N·m	20-25 lb ft
Plate to Converter (Shipping)	27-34 N·m	20-25 lb ft
Plate to Converter (Shipping)	27-34 N·m	20-25 lb ft
Pressure Control Solenoid Bracket to Valve Body Bolt	8-14 N·m	71-124 lb in
Pump Assembly to Case	26-32 N·m	19-24 lb ft
Pump Cover to Pump Body	20-27 N·m	15-20 lb ft
Secondary Fluid Pump Assembly to Valve Body	11-14 N·m	98-124 lb in
Secondary Fluid Pump Assembly to Valve Body	11-14 N·m	98-124 lb in
Speed Sensor to Case	11-14 N·m	98-124 lb in
TCC Solenoid Assembly to Case	8-14 N·m	71-124 lb in
Transmission Fluid Pressure (TFP) Manual Valve Position Switch to Body	8-14 N·m	71-124 lb in
Valve Body to Case	8-14 N·m	71-124 lb in
Valve Body to Case	8-14 N·m	71-124 lb in
Valve Body to Case	8-14 N·m	71-124 lb in
Valve Body to Case	8-14 N·m	71-124 lb in
Valve Body to Case	8-14 N·m	71-124 lb in
Valve body to Case	8-14 N·m	71-124 lb in
Valve Body to Case	8-14 N·m	71-

Automatic Transmission – 4L60-E/4L65-E/4L70-E

Transmission General Specifications

Name	Hydra-Matic 4L60-E
RPO Codes	M30/M32/M33/M70
Production Location	Toledo, Ohio Ramos Arizpe, Mexico
Vehicle Platform (Engine/Transmission) Usage	C/K (GMT 800)
Transmission Drive	Longitudinally-Mounted Rear Wheel Drive
1st Gear Ratio	3.059:1
2nd Gear Ratio	1.625:1
3rd Gear Ratio	1.000:1
4th Gear Ratio	0.696:1
Reverse	2.294:1
Torque Converter Size (Diameter of Torque Converter Turbine)	300 mm (101K) 300 mm (114K) 258 mm
Pressure Taps	Line Pressure
Transmission Fluid Type	DEXRON® VI
Transmission Fluid Capacity (Approximate)	300 mm Converter Dry: 11.50 l (12.1 qt) 258 mm Converter Dry: 9.17 l (9.7 qt)
Transmission Type: 4	Four Forward Gears
Transmission Type: L	Longitudinal Mount
Transmission Type: 60/70	Product Series
Transmission Type: E	Electronic Controls
Position Quadrant	P, R, N, OD, D, 2, 1 P, R, N, OD, 3, 2, 1
Case Material	Die Cast Aluminum
Transmission Weight Dry (Approximate)	300 mm Converter 86.17 kg (190.5 lb) 258 mm Converter 68.71 kg (151.5 lb)
Transmission Weight Wet (Approximate)	300 mm Converter 98.4 kg (218.0 lb) 258 mm Converter 81.2 kg (179 lb)
Maximum Trailer Towing Capacity	6 130 kg (13,500 lb)
Maximum Gross Vehicle Weight (GVW)	3 900 kg (8,600 lb)

Fastener Tightening Specifications

Description of Usage	Specification	
	Metric	English
Accumulator Cover to Case	8-14 N·m	71-124 lb in
Accumulator Cover to Case	8-14 N·m	71-124 lb in
Accumulator Cover to Case	8-14 N·m	71-124 lb in
Accumulator Cover to Case	8-14 N·m	71-124 lb in
Converter Housing to Case	65-75 N·m	48-55 lb ft
Cooler Pipe Connector	35-41 N·m	26-30 lb ft
Detent Spring to Valve Body	20-27 N·m	15-20 lb ft
Extension Housing to Case	42-48 N·m	31-35 lb ft
Extension Housing to Case (4WD Shipping)	11-23 N·m	8-17 lb in
Forward Accumulator Cover to Valve Body	8-14 N·m	71-124 lb in

The pressure of the inner rim of the spring on the pressure plate decreases as the flat position is passed. The inner rim of the diaphragm bears on the pressure plate and is pivoted on a ring on the outer edge of the pressure plate. The application of a pulling load on the inner section of the pressure plate will cause the inner rim to move away from the flywheel and allow the pressure plate to move away from the clutch disc, thereby releasing or disengaging the clutch. When the pressure is released from the inner section, the OIL CAN action of the diaphragm causes the inner section to move in, and the movement of the inner rim forces the pressure plate against the clutch disc, thus engaging the clutch.

The clutch release bearing is moved by the actuator assembly to move the release levers which move the pressure plate to the rear, thus separating the clutch disc from the flywheel when the clutch pedal is depressed by the driver. A piston return spring in the actuator cylinder preloads the clutch linkage and assures a small load on the release bearing with the actuator assembly at all times. As the clutch disc wears, the diaphragm spring fingers move forward forcing the release bearing, actuator assembly, and pushrod to move. This movement forces the actuator cylinder piston to move forward in its bore, consuming hydraulic fluid from the master cylinder reservoir, thereby providing the SELF-ADJUSTING feature of the hydraulic clutch linkage system.

Hydraulic Clutch Description

The clutch hydraulic system consists of a master cylinder and an actuator cylinder. When pressure is applied to the clutch pedal (pedal depressed), the pushrod contacts the plunger and pushes it down the bore of the master cylinder. In the first 0.8 mm (0.031 in) of movement, the recuperation seal closes the port to the fluid reservoir tank, and as the plunger continues to move down the bore of the cylinder, the fluid is forced through the outlet line to the actuator cylinder. As fluid is pushed down the pipe from the master cylinder, this in turn forces the pistons in the actuator cylinder outward. As the actuator cylinder piston moves forward, it forces the release bearing to disengage the clutch pressure plate from the clutch disc. On the return stroke (pedal released), the plunger moves back as a result of the return pressure of the clutch. Fluid returns to the master cylinder and the final movement of the plunger opens the port to the fluid reservoir, allowing an unrestricted flow of fluid between system and reservoir.

The NV 4500 is a 5 speed manual transmission with the fifth speed an overdrive ratio. The 5 forward gears and the reverse gear are fully synchronized. The shifting components are located in the shift cover. The shift cover is not rebuildable.

The 5th speed gear is located on the countershaft in the extension housing. There are 2 types of extension housings depending on the vehicle model.

- C model is aluminum
- K model is aluminum and does not use a rear seal

The main shaft varies between models due to the extension housing configurations.

Clutch

Fastener Tightening Specifications

Application	Specification	
	Metric	English
Clutch Actuator Cylinder Bolt	8 N·m	71 lb in
Clutch Pedal to Brake Module Bolt	50 N·m	37 lb ft
Clutch Pedal to Clutch Pedal Bracket Bolt	36 N·m	27 lb ft
Clutch Pressure Plate Bolt (4.3L Engine)	40 N·m	30 lb ft
Clutch Pressure Plate Bolt (4.8L, 6.0L, 6.6L, and 8.1L Engines)	70 N·m	52 lb ft

Clutch Types

The C/K model vehicle uses two different clutch hydraulic systems and five different clutch variations. The vehicles with the 5 speed transmissions RPO MW3 and MG5 use a different clutch hydraulic system than the vehicles with the 6 speed transmission RPO ML6. For the proper diagnosis, because of the clutch variations, it is important to understand which clutch system is used.

4.3L Clutch

The 4.3L clutch system is described as the following:

- Size - 280 mm (11 in)
- Clutch pressure plate - Diaphragm spring plate, non-self adjusting
- Clutch disc - Damper spring style
- Hydraulic system - 5 speed

4.8L Clutch

The 4.8L clutch system is described as the following:

- Size - 301 mm (11.85 in)
- Clutch pressure plate - Diaphragm spring plate, non-self adjusting
- Clutch disc - Damper spring style
- Hydraulic system - 5 speed

6.0L Clutch

The 6.0L clutch system is described as the following:

- Size - 297 mm (11.70 in)
- Clutch pressure plate - Diaphragm spring plate, self adjusting
- Clutch disc - Damper spring style
- Hydraulic system - 5 speed

8.1L Clutch

The 8.1L clutch system is described as the following:

- Size - 297 mm (11.7 in)
- Clutch pressure plate - Diaphragm spring plate, self adjusting
- Clutch disc - Damper spring style

the inputshaft and the counter shaft. The transmission is available in rear wheel and four wheel drive versions. The NV3500 transmission is built in Muncie, Indiana by New Venture Gear, (a division of New Process Gear) for General Motors Powertrain.

The transmission has the following features:

- Constant mesh helical gearing for reduced noise.
- A two piece aluminum housing.
- Synchronized shifting in all forward gears.
- A shift tower mounted shift lever.
- Single rail shift system.

Manual Transmission - NV 4500

Fastener Tightening Specifications

Application	Specification	
	Metric	English
Backup Lamp Switch	27 N·m	20 lb ft
Clutch Actuator Cylinder Bolt	8 N·m	71 lb in
Clutch Housing Bolt/Stud	50 N·m	37 lb ft
Control Lever Boot Screw	1.6 N·m	14 lb in
Countershaft Rear Retainer Bolts	35 N·m	26 lb ft
Fill Plug	41 N·m	30 lb ft
Input Shaft Retainer Bolts	22 N·m	16 lb ft
Mainshaft Bearing Retainer Bolts	35 N·m	26 lb ft
Mainshaft Nut - RWD models	441 N·m	325 lb ft
Mainshaft Nut - 4WD models	540 N·m	400 lb ft
Power Take-off (PTO) Cover Bolts	30 N·m	22 lb ft
Shift Cover Bolts	27 N·m	20 lb ft
Shift Lever Assembly Nut	37 N·m	27 lb ft
Shift Lever Bolt	20 N·m	15 lb ft
Shift Tower Bolts	11 N·m	97 lb in
Transmission Extension Bolts	54 N·m	40 lb ft
Transmission Mount Bolt	50 N·m	37 lb ft
Transmission Mount to Crossmember Nut	40 N·m	30 lb ft
Transmission to Clutch Housing Bolt	100 N·m	74 lb ft
Vehicle Speed Sensor	16 N·m	12 lb ft

Lubrication Specifications

Recommended Lubricant	Specification	
	Metric	English
Castrol Syntorq LT Transmission Fluid GM P/N 12346190	3.78 liters	4.0 quarts

Description and Operation

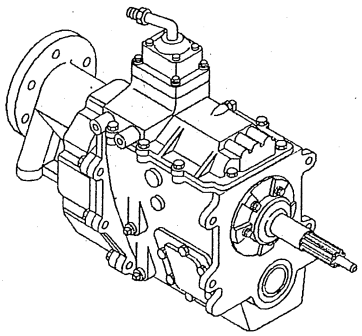

- Hydraulic system - 6 speed

6.6L Clutch

The 6.6L clutch system is described as the following:

- Size - 302 mm (12 in)
- Clutch pressure plate - Diaphragm spring plate, self adjusting
- Clutch disc - No damper spring style
- Hydraulic system - 6 speed

Principal Components

The following are the principal components of the clutch system:

- The driving members; attached to the engine and turning with the engine.
- The driven member; attached to the engine driveline and transmission and turning with the driveline and transmission.
- The operating members; including the spring, the clutch hydraulic system, and the clutch pedal linkage, required to apply and release the pressure, which hold the driving and driven members in contact with each other.

Clutch Driving Members

The clutch driving members consist of two, flat surfaced, iron plates, machined to a smooth finish. One of these surfaces is the rear face of the engine flywheel and the other is a comparatively heavy flat ring, with one side machined, known as the clutch pressure plate.

Clutch Driven Members

The driven member (friction or clutch disc) consists of a hub and a plate, with facings attached to the plate. The clutch disc has cushion springs and dampening springs. The cushion springs are slightly waved, or curled. The cushion springs are attached to the plat, and the clutch facings are attached to the springs. When the clutch is engaged, the cushion springs compress slightly to take up the shock of engagement. The dampening springs are heavy coil springs set in a circle around the hub. The hub is driven through these springs. They help to smooth out the torsional vibration so that the power flow to the transmission is smooth. There are grooves in both sides of the clutch disc facings. These grooves prevent the facings from sticking to the flywheel face and pressure plate when the clutch is disengaged. The grooves break any vacuum that might form and cause the facings to stick to the flywheel ore pressure plate.

Clutch Operating Members

The driving member and the driven member are held in contact by spring pressure. This pressure is exerted by a one-piece conical or diaphragm spring.

A diaphragm spring is a conical piece of spring steel that has been specially stamped to give it greater flexibility. The diaphragm is positioned between the cover and the pressure plate so that the diaphragm spring is nearly flat when the clutch is in the engaged position. The action of this type of spring is similar to that of an ordinary oil can.

The pressure of the inner rim of the spring on the pressure plate decreases as the flat position is passed. The inner rim of the diaphragm bears on the pressure plate and is pivoted on a ring on the outer edge of the pressure plate. The application of a pulling load on the inner section of the pressure plate will cause the inner rim to move away from the flywheel and allow the pressure plate to move away from the clutch disc, thereby releasing or disengaging the clutch. When the pressure is released from the inner section, the OIL CAN action of the diaphragm causes the inner section to move in, and the movement of the inner rim forces the pressure plate against the clutch disc, thus engaging the clutch.

The clutch release bearing is moved by the actuator assembly to move the release levers which move the pressure plate to the rear, thus separating the clutch disc from the flywheel when the clutch pedal is depressed by the driver. A piston return spring in the actuator cylinder preloads the clutch linkage and assures a small load on the release bearing with the actuator assembly at all times. As the clutch disc

wears, the diaphragm spring fingers move forward forcing the release bearing, actuator assembly, and pushrod to move. This movement forces the actuator cylinder piston to move forward in its bore, consuming hydraulic fluid from the master cylinder reservoir, thereby providing the SELF-ADJUSTING feature of the hydraulic clutch linkage system.

Hydraulic Clutch Description

Principal Components

The driving member and the driven member are held in contact by spring pressure. This pressure is exerted by a one-piece conical or diaphragm spring.

A diaphragm spring is a conical piece of spring steel that has been specially stamped to give it greater flexibility. The diaphragm is positioned between the cover and the pressure plate so that the diaphragm spring is nearly flat when the clutch is in the engaged position. The action of this type of spring is similar to that of an ordinary oil can.

The pressure of the inner rim of the spring on the pressure plate decreases as the flat position is passed. The inner rim of the diaphragm bears on the pressure plate and is pivoted on a ring on the outer edge of the pressure plate. The application of a pulling load on the inner section of the pressure plate will cause the inner rim to move away from the flywheel and allow the pressure plate to move away from the clutch disc, thereby releasing or disengaging the clutch. When the pressure is released from the inner section, the OIL CAN action of the diaphragm causes the inner section to move in, and the movement of the inner rim forces the pressure plate against the clutch disc, thus engaging the clutch.

The clutch release bearing is moved by the actuator assembly to move the release levers which move the pressure plate to the rear, thus separating the clutch disc from the flywheel when the clutch pedal is depressed by the driver. A piston return spring in the actuator cylinder preloads the clutch linkage and assures a small load on the release bearing with the actuator assembly at all times. As the clutch disc wears, the diaphragm spring fingers move forward forcing the release bearing, actuator assembly, and pushrod to move. This movement forces the actuator cylinder piston to move forward in its bore, consuming hydraulic fluid from the master cylinder reservoir, thereby providing the SELF-ADJUSTING feature of the hydraulic clutch linkage system.

Clutch Driving Members

The clutch driving members consist of two, flat surfaced, iron plates, machined to a smooth finish. One of these surfaces is the rear face of the engine flywheel and the other is a comparatively heavy flat ring, with one side machined, known as the clutch pressure plate.

Clutch Driven Members

The driven member (friction or clutch disc) consists of a hub and a plate, with facings attached to the plate. The clutch disc has cushion springs and dampening springs. The cushion springs are slightly waved, or curled. The cushion springs are attached to the plat, and the clutch facings are attached to the springs. When the clutch is engaged, the cushion springs compress slightly to take up the shock of engagement. The dampening springs are heavy coil springs set in a circle around the hub. The hub is driven through these springs. They help to smooth out the torsional vibration so that the power flow to the transmission is smooth. There are grooves in both sides of the clutch disc facings. These grooves prevent the facings from sticking to the flywheel face and pressure plate when the clutch is disengaged. The grooves break any vacuum that might form and cause the facings to stick to the flywheel ore pressure plate.

Clutch Operating Members

The driving member and the driven member are held in contact by spring pressure. This pressure is exerted by a one-piece conical or diaphragm spring.

A diaphragm spring is a conical piece of spring steel that has been specially stamped to give it greater flexibility. The diaphragm is positioned between the cover and the pressure plate so that the diaphragm spring is nearly flat when the clutch is in the engaged position. The action of this type of spring is similar to that of an ordinary oil can.

H	
H	Hydrogen
H2O	Water
Harn	Harness
HC	Hydrocarbons
H/CMPR	High Compression
HD	Heavy Duty
HDC	Heavy Duty Cooling
hex	Hexagon, Hexadecimal
Hg	Mercury
Hi Alt	High Altitude
HO2S	Heated Oxygen Sensor
hp	Horsepower
HPL	High Pressure Liquid
HPS	High Performance System
HPV	High Pressure Vapor
HPVS	Heat Pump Ventilation System
Htd	Heated
HTR	Heater
HUD	Head-up Display
HVAC	Heater-Ventilation-Air Conditioning
HVACM	Heater-Vent-Air Conditioning Module
HVIL	High Voltage Interlock Loop
HVM	Heater Vent Module
Hz	Hertz
I	
IAC	Idle Air Control
IAT	Intake Air Temperature
IC	Integrated Circuit, Ignition Control
ICCS	Integrated Chassis Control System
ICM	Ignition Control Module
ID	Identification, Inside Diameter
IDI	Integrated Direct Ignition
IGBT	Insulated Gate Bi-Polar Transistor
ign	Ignition
ILC	Idle Load Compensator
in	Inch/Inches
INJ	Injection
inst	Instantaneous, Instant
IP	Instrument Panel
IPC	Instrument Panel Cluster
IPM	Instrument Panel Module
I/PEC	Instrument Panel Electrical Center
ISC	Idle Speed Control
ISO	International Standards Organization
ISS	Input Speed Shaft, Input Shaft Speed
K	
KAM	Keep Alive Memory
KDD	Keyboard Display Driver
kg	Kilogram

kHz	Kilohertz
km	Kilometer
km/h	Kilometers per Hour
km/l	Kilometers per Liter
kPa	Kilopascals
KS	Knock Sensor
kV	Kilovolts
L	
L	Liter
L4	Four Cylinder Engine, In-Line
L6	Six-Cylinder Engine, In-Line
lb	Pound
lb ft	Pound Feet Torque
lb in	Pound Inch Torque
LCD	Liquid Crystal Display
LDCL	Left Door Closed Locking
LDCM	Left Door Control Module
LDM	Lamp Driver Module
LED	Light Emitting Diode
LEV	Low Emissions Vehicle
LF	Left Front
lm	Lumens
LR	Left Rear
LT	Left
LT	Light
LT	Long Term
LTPI	Low Tire Pressure Indicator
LTPWS	Low Tire Pressure Warning System
M	
MAF	Mass Air Flow
Man	Manual
MAP	Manifold Absolute Pressure
MAT	Manifold Absolute Temperature
max	Maximum
M/C	Mixture Control
MDP	Manifold Differential Pressure
MFI	Multiport Fuel Injection
mi	Miles
MIL	Malfunction Indicator Lamp
min	Minimum
MIN	Mobile Identification Number
mL	Milliliter
mm	Millimeter
mpg	Miles per Gallon
mph	Miles per Hour
ms	Millisecond
MST	Manifold Surface Temperature
MSVA	Magnetic Steering Variable Assist, Magnasteer®
M/T	Manual Transmission/Transaxle
MV	Megavolt

mV	Millivolt
N	
NAES	North American Export Sales
NC	Normally Closed
NEG	Negative
Neu	Neutral
NI	Neutral Idle
NiMH	Nickel Metal Hydride
NLGI	National Lubricating Grease Institute
N·m	Newton-meter Torque
NO	Normally Open
NOx	Oxides of Nitrogen
NPTC	National Pipe Thread Coarse
NPTF	National Pipe Thread Fine
NOVRAM	Non-Volatile Random Access Memory
O	
O2	Oxygen
O2S	Oxygen Sensor
OBD	On-Board Diagnostics
OBD II	On-Board Diagnostics Second Generation
OC	Oxidation Converter Catalytic
OCS	Opportunity Charge Station
OD	Outside Diameter
ODM	Output Drive Module
ODO	Odometer
OE	Original Equipment
OEM	Original Equipment Manufacturer
OHC	Overhead Camshaft
ohms	Ohm
OL	Open Loop, Out of Limits
ORC	Oxidation Reduction Converter Catalytic
ORN	Orange
ORVR	On-Board Refueling Vapor Recovery
OSS	Output Shaft Speed
oz	Ounce(s)
P	
PAG	Polyalkylene Glycol
PAIR	Pulsed Secondary Air Injection
PASS, PSGR	Passenger
PASS-Key®	Personalized Automotive Security System
P/B	Power Brakes
PC	Pressure Control
PCB	Printed Circuit Board
PCM	Powertrain Control Module
PCS	Pressure Control Solenoid
PCV	Positive Crankcase Ventilation
PEB	Power Electronics Bay
PID	Parameter Identification
PIM	Power Inverter Module
PM	Permanent Magnet Generator

P/N	Part Number
PNK	Pink
PNP	Park/Neutral Position
PRNDL	Park, Reverse, Neutral, Drive, Low
POA	Pilot Operated Absolute Valve
POS	Positive, Position
POT	Potentiometer Variable Resistor
PPL	Purple
ppm	Parts per Million
PROM	Programmable Read Only Memory
P/S, PS	Power Steering
PSCM	Power Steering Control Module, Passenger Seat Control Module
PSD	Power Sliding Door
PSP	Power Steering Pressure
psi	Pounds per Square Inch
psia	Pounds per Square Inch Absolute
psig	Pounds per Square Inch Gauge
pt	Pint
PTC	Positive Temperature Coefficient
PWM	Pulse Width Modulated
Q	
QDM	Quad Driver Module
qt	Quart(s)
R	
R-12	Refrigerant-12
R-134a	Refrigerant-134a
RAM	Random Access Memory, Non-permanent memory device, memory contents are lost when power is removed.
RAP	Retained Accessory Power
RAV	Remote Activation Verification
RCDLR	Remote Control Door Lock Receiver
RDCM	Right Door Control Module
Ref	Reference
Rev	Reverse
REX	Rear Exchanger
RIM	Rear Integration Module
RF	Right Front, Radio Frequency
RFA	Remote Function Actuation
RFI	Radio Frequency Interference
RH	Right Hand
RKE	Remote Keyless Entry
Rly	Relay
ROM	Read Only Memory, Permanent memory device, memory contents are retained when power is removed.
RPM	Revolutions per Minute Engine Speed
RPO	Regular Production Option
RR	Right Rear
RSS	Road Sensing Suspension
RTD	Real Time Damping
RT	Right

RTV	Room Temperature Vulcanizing Sealer
RWAL	Rear Wheel Antilock
RWD	Rear Wheel Drive
S	
s	Second(s)
SAE	Society of Automotive Engineers
SC	Supercharger
SCB	Supercharger Bypass
SCM	Seat Control Module
SDM	Sensing and Diagnostic Module
SEO	Special Equipment Option
SFI	Sequential Multiport Fuel Injection
SI	System International Modern Version of Metric System
SIAB	Side Impact Air Bag
SIR	Supplemental Inflatable Restraint
SLA	Short/Long Arm Suspension
sol	Solenoid
SO2	Sulfur Dioxide
SP	Splice Pack
S/P	Series/Parallel
SPO	Service Parts Operations
SPS	Service Programming System, Speed Signal
sq ft, ft^2	Square Foot/Feet
sq in, in^2	Square Inch/Inches
SRC	Service Ride Control
SRI	Service Reminder Indicator
SRS	Supplemental Restraint System
SS	Shift Solenoid
ST	Scan Tool
STID	Station Identification Station ID
S4WD	Selectable Four-Wheel Drive
Sw	Switch
SWPS	Steering Wheel Position Sensor
syn	Synchronizer
T	
TAC	Throttle Actuator Control
Tach	Tachometer
TAP	Transmission Adaptive Pressure, Throttle Adaptive Pressure
TBI	Throttle Body Fuel Injection
TC	Turbocharger, Transmission Control
TCC	Torque Converter Clutch
TCS	Traction Control System
TDC	Top Dead Center
TEMP	Temperature
Term	Terminal
TFP	Transmission Fluid Pressure
TFT	Transmission Fluid Temperature
THM	Turbo Hydro-Matic
TIM	Tire Inflation Monitoring, Tire Inflation Module
TOC	Transmission Oil Cooler

TP	Throttle Position
TPA	Terminal Positive Assurance
TPM	Tire Pressure Monitoring, Tire Pressure Monitor
TR	Transmission Range
TRANS	Transmission/Transaxle
TT	Tell Tail Warning Lamp
TV	Throttle Valve
TVRS	Television and Radio Suppression
TVV	Thermal Vacuum Valve
TWC	Three Way Converter Catalytic
TWC+OC	Three Way + Oxidation Converter Catalytic
TXV	Thermal Expansion Valve
U	
UART	Universal Asynchronous Receiver Transmitter
U/H	Underhood
U/HEC	Underhood Electrical Center
U-joint	Universal Joint
UTD	Universal Theft Deterrent
UV	Ultraviolet
V	
V	Volt(s), Voltage
V6	Six-Cylinder Engine, V-Type
V8	Eight-Cylinder Engine, V-Type
Vac	Vacuum
VAC	Vehicle Access Code
VATS	Vehicle Anti-Theft System
VCIM	Vehicle Communication Interface Mode
VCM	Vehicle Control Module
V dif	Voltage Difference
VDOT	Variable Displacement Orifice Tube
VDV	Vacuum Delay Valve
vel	Velocity
VES	Variable Effort Steering
VF	Vacuum Fluorescent
VIO	Violet
VIN	Vehicle Identification Number
VLR	Voltage Loop Reserve
VMV	Vacuum Modulator Valve
VR	Voltage Regulator
V ref	Voltage Reference
VSES	Vehicle Stability Enhancement System
VSS	Vehicle Speed Sensor
W	
w/	With
W/B	Wheel Base
WHL	Wheel
WHT	White
w/o	Without
WOT	Wide Open Throttle
W/P	Water Pump

W/S	Windshield
WSS	Wheel Speed Sensor
WU-OC	Warm Up Oxidation Converter Catalytic
WU-TWC	Warm Up Three-Way Converter Catalytic
X	
X-valve	Expansion Valve
Y	
yd	Yard(s)
YEL	Yellow

This page intentionally left blank.

Conversion - English/Metric

English	Multiply/ Divide by	Metric
In order to calculate English measurement, divide by the number in the center column. In order to calculate metric measurement, multiply by the number in the center column.		
Length		
in	25.4	mm
ft	0.3048	m
yd	0.9144	
mi	1.609	km
Area		
sq in	645.2	sq mm
	6.45	sq cm
sq ft	0.0929	sq m
sq yd	0.8361	
Volume		
cu in	16,387.00	cu mm
	16.387	cu cm
	0.0164	L
qt	0.9464	
gal	3.7854	
cu yd	0.764	cu m
Mass		
lb	0.4536	kg
ton	907.18	
	0.907	tonne (t)
Force		
Kg F	9.807	newtons (N)
oz F	0.278	
lb F	4.448	
Acceleration		
ft/s²	0.3048	m/s²
In/s²	0.0254	
Torque		
Lb in	0.11298	N·m
lb ft	1.3558	
Power		
hp	0.745	kW
Pressure (Stress)		
inches of H2O	0.2488	kPa
lb/sq in	6.895	
Energy (Work)		
Btu	1055	J (J= one Ws)
lb ft	1.3558	
kW hour	3,600,000.00	
Light		
Foot Candle	10.764	lm/m²

Velocity		
mph	1.6093	km/h
Temperature		
(°F - 32) 5/9	=	°C
°F	=	(9/5 °C + 32)
Fuel Performance		
235.215/mpg	=	100 km/L

Equivalents - Decimal and Metric

Fraction (in)	Decimal (in)	Metric (mm)
1/64	0.015625	0.39688
1/32	0.03125	0.79375
3/64	0.046875	1.19062
1/16	0.0625	1.5875
5/64	0.078125	1.98437
3/32	0.09375	2.38125
7/64	0.109375	2.77812
1/8	0.125	3.175
9/64	0.140625	3.57187
5/32	0.15625	3.96875
11/64	0.171875	4.36562
3/16	0.1875	4.7625
13/64	0.203125	5.15937
7/32	0.21875	5.55625
15/64	0.234375	5.95312
1/4	0.25	6.35
17/64	0.265625	6.74687
9/32	0.28125	7.14375
19/64	0.296875	7.54062
5/16	0.3125	7.9375
21/64	0.328125	8.33437
11/32	0.34375	8.73125
23/64	0.359375	9.12812
3/8	0.375	9.525
25/64	0.390625	9.92187
13/32	0.40625	10.31875
27/64	0.421875	10.71562
7/16	0.4375	11.1125
29/64	0.453125	11.50937
15/32	0.46875	11.90625
31/64	0.484375	12.30312
1/2	0.5	12.7
33/64	0.515625	13.09687
17/32	0.53125	13.49375
35/64	0.546875	13.89062
9/16	0.5625	14.2875
37/64	0.578125	14.68437
19/32	0.59375	15.08125
39/64	0.609375	15.47812
5/8	0.625	15.875
41/64	0.640625	16.27187

Fraction (in)	Decimal (in)	Metric (mm)
21/32	0.65625	16.66875
43/64	0.671875	17.06562
11/16	0.6875	17.4625
45/64	0.703125	17.85937
23/32	0.71875	18.25625
47/64	0.734375	18.65312
3/4	0.75	19.05
49/64	0.765625	19.44687
25/32	0.78125	19.84375
51/64	0.796875	20.24062
13/16	0.8125	20.6375
53/64	0.828125	21.03437
27/32	0.84375	21.43125
55/64	0.859375	21.82812
7/8	0.875	22.225
57/64	0.890625	22.62187
29/32	0.90625	23.01875
59/64	0.921875	23.41562
15/16	0.9375	23.8125
61/64	0.953125	24.20937
31/32	0.96875	24.60625
63/64	0.984375	25.00312
1	1.0	25.4

This page intentionally left blank.

Fasteners

Metric Fasteners

This vehicle provides fastener dimensions using the metric system. Most metric fasteners are approximate in diameter to equivalent English fasteners. Make replacements using fasteners of the same nominal diameter, thread pitch, and strength.

A number marking identifies the OE metric fasteners except cross-recess head screws. The number also indicates the strength of the fastener material. A Posidrive® or Type 1A cross-recess identifies a metric cross-recess screw. For best results, use a Type 1A cross-recess screwdriver, or equivalent, in Posidrive® recess head screws.

GM Engineering Standards and North American Industries have adopted a portion of the ISO-defined standard metric fastener sizes. The purpose was to reduce the number of fastener sizes used while retaining the best thread qualities in each thread size. For example, the metric M6.0 X 1 screw, with nearly the same diameter and 25.4 threads per inch replaced the English 1/4-20 and 1/4-28 screws. The thread pitch is midway between the English coarse and fine thread pitches.

Fastener Strength Identification

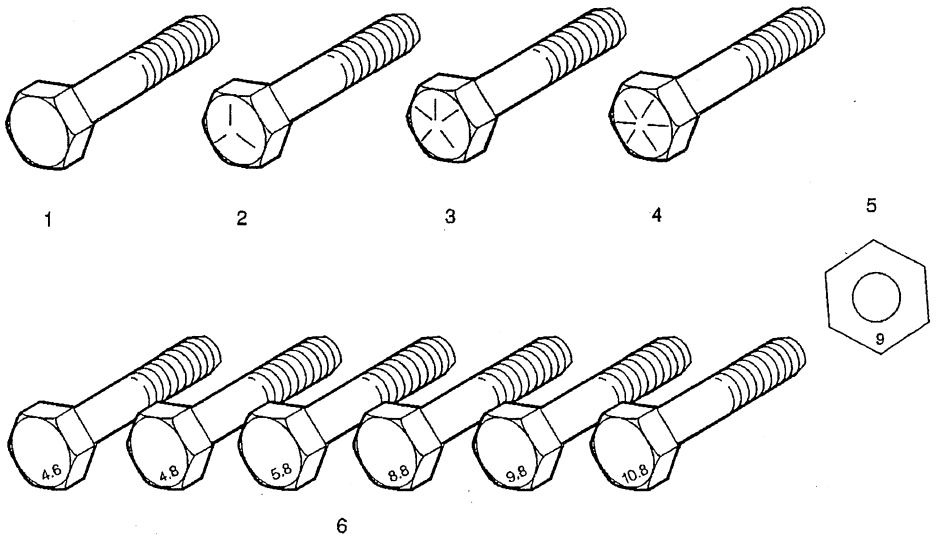

1. English Bolt, Grade 2 (Strength Class)
2. English Bolt, Grade 5 (Strength Class)
3. English Bolt, Grade 7 (Strength Class)
4. English Bolt, Grade 8 (Strength Class)
5. Metric Nut, Strength Class 9
6. Metric Bolts, Strength Class Increases as Numbers Increase

The most commonly used metric fastener strength property classes are 9.8 and 10.9. The class identification is embossed on the head of each bolt. The English, inch strength classes range from grade 2 to grade 8. Radial lines are embossed on the head of each bolt in order to identify the strength class. The number of lines on the head of the bolt is 2 lines less than the actual grade. For example, a grade 8 bolt will have 6 radial lines on the bolt head. Some metric nuts are marked with a single digit strength identification number on the nut face.

The correct fasteners are available through GM SPO. Many metric fasteners available in the aftermarket parts channels are designed to metric standards of countries other than the United States, and may exhibit the following:

- Lower strength
- No numbered head marking system
- Wrong thread pitch

The metric fasteners on GM products are designed to new, international standards. The following are the common sizes and pitches, except for special applications:

- M6.0 X 1
- M8 X 1.25
- M10 X 1.5
- M12 X 1.75
- M14 X 2.00
- M16 X 2.00

Prevailing Torque Fasteners

Prevailing torque fasteners create a thread interface between the fastener and the fastener counterpart in order to prevent the fastener from loosening.

All Metal Prevailing Torque Fasteners

These fasteners accomplish the thread interface by a designed distortion or deformation in the fastener.

Nylon Interface Prevailing Torque Fasteners

These fasteners accomplish the thread interface by the presence of a nylon material on the fastener threads.

Adhesive Coated Fasteners

These fasteners accomplish the thread interface by the presence of a thread-locking compound on the fastener threads. Refer to the appropriate repair procedure in order to determine if the fastener may be reused and the applicable thread-locking compound to apply to the fastener.

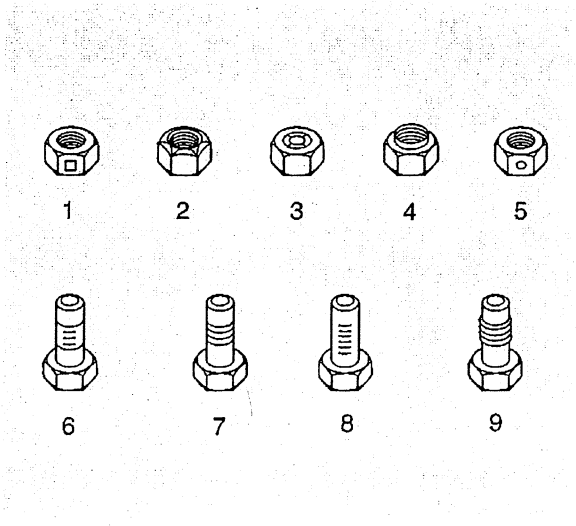

1. Prevailing Torque Nut, Center Lock Type
2. Prevailing Torque Nut, Top Lock Type
3. Prevailing Torque Nut, Nylon Patch Type
4. Prevailing Torque Nut, Nylon Washer Insert Type
5. Prevailing Torque Nut, Nylon Insert Type

6. Prevailing Torque Bolt, Dry Adhesive Coating Type
7. Prevailing Torque Bolt, Thread Profile Deformed Type
8. Prevailing Torque Bolt, Nylon Strip Type
9. Prevailing Torque Bolt, Out-of-Round Thread Area Type

A prevailing torque fastener may be reused ONLY if:

- The fastener and the fastener counterpart are clean and not damaged
- There is no rust on the fastener
- The fastener develops the specified minimum torque against its counterpart prior to the fastener seating

Metric Prevailing Torque Fastener Minimum Torque Development

Application	Specification	
	Metric	English
All Metal Prevailing Torque Fasteners		
6 mm	0.4 N·m	4 lb in
8 mm	0.8 N·m	7 lb in
10 mm	1.4 N·m	12 lb in
12 mm	2.1 N·m	19 lb in
14 mm	3 N·m	27 lb in
16 mm	4.2 N·m	37 lb in
20 mm	7 N·m	62 lb in
24 mm	10.5 N·m	93 lb in
Nylon Interface Prevailing Torque Fasteners		
6 mm	0.3 N·m	3 lb in
8 mm	0.6 N·m	5 lb in
10 mm	1.1 N·m	10 lb in
12 mm	1.5 N·m	13 lb in
14 mm	2.3 N·m	20 lb in
16 mm	3.4 N·m	30 lb in
20 mm	5.5 N·m	49 lb in
24 mm	8.5 N·m	75 lb in

English Prevailing Torque Fastener Minimum Torque Development

Application	Specification	
	Metric	English
All Metal Prevailing Torque Fasteners		
1/4 in	0.5 N·m	4.5 lb in
5/16 in	0.8 N·m	7.5 lb in
3/8 in	1.3 N·m	11.5 lb in
7/16 in	1.8 N·m	16 lb in
1/2 in	2.3 N·m	20 lb in
9/16 in	3.2 N·m	28 lb in
5/8 in	4 N·m	36 lb in
3/4 in	7 N·m	54 lb in
Nylon Interface Prevailing Torque Fasteners		
1/4 in	0.3 N·m	3 lb in
5/16 in	0.6 N·m	5 lb in
3/8 in	1 N·m	9 lb in
7/16 in	1.3 N·m	12 lb in
1/2 in	1.8 N·m	16 lb in
9/16 in	2.5 N·m	22 lb in
5/8 in	3.4 N·m	30 lb in
3/4 in	5 N·m	45 lb in

S = Standard Equipment A = Available – (dashes) = Not Available D = ADI Available
■ = Included in Equipment Group □ = Included in Equipment Group but upgradeable

*Indicates availability of feature on multiple models. For example, it indicates feature availability on 2WD and 4WD Models or Rear wheel drive and All-wheel drive Models.

Codes listed in the shaded column titled Ref. Only RPO Code are for internal use only and should not be ordered.

Free Flow RPO Code	Ref. Only RPO Code	Description 1 - Equipment group 1SS available on CC15753 Models.	Ext. Cab High-Performance Package 1SS[1]
		Air bags, frontal, driver and right-front passenger with Passenger Sensing System **1 - Always use safety belts and the correct child restraints for your child's age and size. Even in vehicles equipped with air bags and the Passenger Sensing System, children are safer when properly secured in a rear seat. Never place a rear-facing infant restraint in the front seat of any vehicle equipped with an active frontal air bag. See the vehicle's Owner's Manual and child safety seat instructions for more safety information.**	S[1]
	CJ3	**Air conditioning**, dual-zone manual climate control with individual climate settings for driver and right-front passenger	S
		Assist handles, front passenger and rear outboard	S
	UB0	**Audio system**, AM/FM stereo with CD player, seek-and-scan, digital clock, auto-tone control, Radio Data System (RDS) and speed-compensated volume **1 - Upgradeable to (UC6) AM/FM stereo with 6-disc in-dash CD changer. Requires (AE7) front 40/20/40 split bench seat.**	S[1]
		Cigarette lighter, on instrument panel	S
		Coat hooks, driver- and passenger-side rear	S
		Cup holders, in console	S
		Driver Information Center with trip odometer and message center (monitors numerous systems depending on vehicle equipment level including low fuel, turn signal "on", transmission temperature and oil change notification) **1 - With (UK3) steering wheel controls, includes trip and fuel information selections and programmable personalization features.**	S[1]
		Instrumentation, analog with speedometer, odometer with trip odometer, fuel level, voltmeter, engine hour meter, temperature, oil pressure, transmission temperature gauge, tachometer and white instrument cluster	S
		Lighting, interior with dome and reading lights, backlit instrument panel switches, rear map lights and door handle-activated illuminated entry	S
		Power outlets, 2 auxiliary instrument panel-mounted with covers, 12-volt	S
	AE7	**Seats**, front 40/20/40 split-bench, 3-passenger, driver and front passenger manual reclining, includes center fold-down armrest with storage, adjustable outboard head restraints and storage pockets **1 - Not available with (UC6) AM/FM stereo with 6-disc in-dash CD changer.**	S[1]
		Seats, rear full-width bench, 3-passenger, folding (includes child seat top tether anchor)	S
	**D	**Seat trim**, Dark Charcoal Custom Cloth **1 - Not available with (AN3) front full-feature bucket seats with leather seating surfaces.**	S[1]
		Steering column, Tilt-Wheel, adjustable with brake/transmission shift interlock	S
		Theft-deterrent system, PASSlock II	S

Free Flow RPO Code	Ref. Only RPO Code	Description 1 - Equipment group 1SS available on CC15753 Models.	Ext. Cab High-Performance Package 1SS[1]
		Tools, mechanical jack and wheel wrench, spare tire assist hook, floor-mounted in back of cab	S
		Visors, driver and front passenger, padded with cloth trim, extenders, pocket on driver-side and vanity mirror on passenger-side, Shale-colored	S
		Warning tones, headlamp on, key-in-ignition, driver and passenger buckle up reminder and turn signal on	S
		Daytime Running Lamps, with automatic exterior lamp control	S
		Glass, Solar-Ray light-tinted, all windows	S
		Headlamps, dual halogen composite with automatic exterior lamp control and flash-to-pass feature	S
		Lamps, dual cargo area lamps	S
	ZY1	**Paint**, solid	S
	E63	**Pickup box**, Fleetside	S
	V76	**Recovery hooks**, front, frame-mounted	S
		Tire carrier, outside spare, winch-type mounted under frame at rear, steel wheel located at rear underbody of vehicle	S
	ZAN	**Tire**, spare P265/70R17 blackwall, includes steel wheel located at rear underbody of vehicle	S
		Wheel, 17" (43.2 cm) steel spare	S
		Wipers, front intermittent wet-arm with pulse washers	S
	KG3	**Alternator**, 145 amps	S
		Battery, heavy-duty 600 cold-cranking amps, maintenance-free with rundown protection and retained accessory power	S
		Brakes, 4-wheel antilock, front disc/rear drum	S
		Frame, hydroformed ladder-type	S
	Q4B	**GVWR**, 6200 lbs. (2812 kg)	S
	GT4	**Rear axle**, 3.73 ratio	S
		Steering, power	S
		Suspension, front independent with torsion bar and stabilizer bar	S

S = Standard Equipment A = Available – (dashes) = Not Available D = ADI Available
■ = Included in Equipment Group □ = Included in Equipment Group but upgradeable

No deletions allowed to Equipment Groups. Additional options may be added; check ordering information section for compatibility.

*Indicates availability of feature on multiple models. For example, it indicates feature availability on 2WD and 4WD Models or Rear wheel drive and All-wheel drive Models.

Codes listed in the shaded column titled Ref. Only RPO Code are for internal use only and should not be ordered.

Free Flow RPO Code	Ref. Only RPO Code	Description 1 - Equipment group 1SS available on CC15753 Models.	Ext. Cab High-Performance Package 1SS[1]
	DK7	**Console**, overhead mini with map lights 1 - Not available with (CF5) power sunroof.	■ [1]
	K34	**Cruise control**, electronic with set and resume speed	■
	C49	**Defogger**, rear-window electric 1 - Not available with (A28) sliding rear glass.	■ [1]
	AU3	**Door locks**, power	■
	B30	**Floor covering**, color-keyed carpeting with carpeted floor mats	■
	AU0	**Remote Keyless Entry**, with 2 transmitters, panic button and content theft alarm	■
	DF5	**Mirror**, inside rearview with 8-point compass, right-front passenger air bag status and outside temperature display	■
	NP5	**Steering wheel**, leather-wrapped, Black with theft-deterrent locking feature	■
	A31	**Windows**, power with driver and front passenger Express-Down	■
	VF1	**Bumper**, front integrated with the color-keyed front fascia	■
	VF3	**Bumper**, rear integrated with the color-keyed rear fascia	■
	AJ1	**Glass**, Solar-Ray deep-tinted (all windows except light-tinted glass on windshield and driver- and front passenger-side glass)	■
	TRB	**Grille**, color-keyed	■
	DL3	**Mirrors**, outside heated power-adjustable, power-folding and driver-side auto-dimming, Black with integrated turn signal indicators 1 - Includes curb-tilt feature when (UK3) steering wheel controls are ordered.	■ [1]
	B4U	**Silverado SS**	■
	SAF	**Spare tire lock**, keyed cylinder lock that utilizes same key as ignition and door	■
	QSS	**Tires**, P275/55R20 touring, blackwall	■
	P35	**Wheels**, 4 - 20" x 8.5" (50.8 cm x 21.6 cm) chrome 1 - Upgradeable to (P30) 4 - 20" x 8.5" (50.8 cm x 21.6 cm) Sport aluminum wheels.	□ [1]
	KC4	**Cooling**, external engine oil cooler, heavy-duty air-to-oil, integral to driver-side of radiator tank	■
	KNP	**Cooling**, auxiliary external transmission oil cooler, heavy-duty air-to-oil	■
	G80	**Differential**, heavy-duty locking rear	■
	LQ9	**Engine**, Vortec high-output 6.0L V8 SFI (345 hp [257.0 kW] @ 5200 rpm, 380 lb-ft of torque [513.0 N-m] @ 4000 rpm)	■

Free Flow RPO Code	Ref. Only RPO Code	Description 1 - Equipment group 1SS available on CC15753 Models.	Ext. Cab High-Performance Package 1SS[1]
		Exhaust, high-performance "throaty" exhaust with NASCAR-inspired polished exhaust tip	■
		Suspension, rear 4-stage multi-leaf springs, semi-elliptic	■
	Z60	**Suspension Package**, High-Performance	■
	M32	**Transmission**, 4-speed automatic, heavy-duty, electronically controlled with overdrive, tow/haul mode and external transmission oil cooler (Must specify)	■

S = Standard Equipment A = Available -- (dashes) = Not Available D = ADI Available
■ = Included in Equipment Group □ = Included in Equipment Group but upgradeable

No deletions allowed to Equipment Groups. Additional options may be added; check ordering information section for compatibility.

*Indicates availability of feature on multiple models. For example, it indicates feature availability on 2WD and 4WD Models or Rear wheel drive and All-wheel drive Models.

Codes listed in the shaded column titled Ref. Only RPO Code are for internal use only and should not be ordered.

Free Flow RPO Code	Ref. Only RPO Code	Description 1 - Equipment group 1SS available on CC15753 Models.	Ext. Cab High-Performance Package 1SS[1]
	DK7	**Console**, overhead mini with map lights **1 - Not available with (CF5) power sunroof.**	■[1]
	K34	**Cruise control**, electronic with set and resume speed	■
	C49	**Defogger**, rear-window electric **1 - Not available with (A28) sliding rear glass.**	■[1]
	AU3	**Door locks**, power	■
	B30	**Floor covering**, color-keyed carpeting with carpeted floor mats	■
	AU0	**Remote Keyless Entry**, with 2 transmitters, panic button and content theft alarm	■
	DF5	**Mirror**, inside rearview with 8-point compass, right-front passenger air bag status and outside temperature display	■
	NP5	**Steering wheel**, leather-wrapped, Black with theft-deterrent locking feature	■
	A31	**Windows**, power with driver and front passenger Express-Down	■
	VF1	**Bumper**, front integrated with the color-keyed front fascia	■
	VF3	**Bumper**, rear integrated with the color-keyed rear fascia	■
	AJ1	**Glass**, Solar-Ray deep-tinted (all windows except light-tinted glass on windshield and driver- and front passenger-side glass)	■
	TRB	**Grille**, color-keyed	■
	DL3	**Mirrors**, outside heated power-adjustable, power-folding and driver-side auto-dimming, Black with integrated turn signal indicators **1 - Includes curb-tilt feature when (UK3) steering wheel controls are ordered.**	■[1]
	B4U	**Silverado SS**	■
	SAF	**Spare tire lock**, keyed cylinder lock that utilizes same key as ignition and door	■
	QSS	**Tires**, P275/55R20 touring, blackwall	■
	P35	**Wheels**, 4 - 20" x 8.5" (50.8 cm x 21.6 cm) chrome **1 - Upgradeable to (P30) 4 - 20" x 8.5" (50.8 cm x 21.6 cm) Sport aluminum wheels.**	□[1]
	KC4	**Cooling**, external engine oil cooler, heavy-duty air-to-oil, integral to driver-side of radiator tank	■
	KNP	**Cooling**, auxiliary external transmission oil cooler, heavy-duty air-to-oil	■
	G80	**Differential**, heavy-duty locking rear	■
	LQ9	**Engine**, Vortec high-output 6.0L V8 SFI (345 hp [257.0 kW] @ 5200 rpm, 380 lb-ft of torque [513.0 N-m] @ 4000 rpm)	■

Free Flow RPO Code	Ref. Only RPO Code	Description 1 - Equipment group 1SS available on CC15753 Models.	Ext. Cab High-Performance Package 1SS[1]
		Exhaust, high-performance "throaty" exhaust with NASCAR-inspired polished exhaust tip	■
		Suspension, rear 4-stage multi-leaf springs, semi-elliptic	■
	Z60	**Suspension Package**, High-Performance	■
	M32	**Transmission**, 4-speed automatic, heavy-duty, electronically controlled with overdrive, tow/haul mode and external transmission oil cooler (Must specify)	■

ADDITIONAL OPTIONS

Free Flow RPO Code	Ref. Only RPO Code	Description 1 - Equipment group 1SS available on CC15753 Models.	Ext. Cab High-Performance Package 1SS[1]
CJ2		**Air conditioning**, dual-zone automatic climate control with individual climate settings for driver and right-front passenger	A
UC6		**Audio system**, AM/FM stereo with 6-disc CD changer, seek-and-scan, digital clock, auto-tone control, Radio Data System (RDS), speed-compensated volume and TheftLock **1 - Requires and only available with (AN3) front full-feature bucket seats with leather seating surfaces.**	A[1]
UE1		**OnStar**, 1-year of Safe and Sound plan. Includes Automatic Notification of Air Bag Deployment, Stolen Vehicle Location Assistance, Emergency Services, Roadside Assistance, Remote Door Unlock, OnStar Vehicle Diagnostics, Hands-Free Calling, AccidentAssist and Remote Horn & Lights **1 - OnStar services require vehicle electrical system (including battery), wireless service and GPS satellite signals to be available and operating for features to function properly. OnStar acts as a link to existing emergency service providers. OnStar Vehicle Diagnostics available on most 2004 MY and newer GM vehicles. Diagnostic capability varies by model. Visit onstar.com for system limitations and details. Requires (UK3) Steering wheel controls. Not available with a ship-to of Puerto Rico or the Virgin Islands.**	A[1]
PDB		**OnStar Plus Package**, includes (U2K) XM Satellite Radio, (UE1) OnStar and (UK3) steering-wheel mounted audio controls **1 - Package does not include (U2K) XM Satellite Radio when ordered outside the 48 contiguous United States. Not available with a ship-to of Puerto Rico or the Virgin Islands.**	A[1]
R6Q		**OnStar Plus Package discount not desired** **1 - Required when content within option package is ordered and entire package is not desired.**	A[1]
AN3		**Seats**, power reclining full-feature front bucket with leather seating surfaces, 10-way power driver and front passenger seat adjusters, 2-way power lumbar control, heated seat cushions and seatbacks, 2-position driver memory, adjustable outboard head restraints, floor console, dual inboard armrests and storage pockets	A
AG1		**Seat adjuster**, driver 6-way power **1 - With (AN3) front full-feature bucket seats, includes 10-way power seat adjusters.**	A[1]
DNH		**Regular production accessory**, Underseat storage, rear, lockable **1 - For additional GM Accessory Offerings and Installation, please contact your local GM Accessory Distributor Installer (ADI).**	A/D[1]
UK3		**Steering wheel controls**, mounted audio and Driver Information Center controls which provides access to enhanced Driver Information Center features and information	A

ADDITIONAL OPTIONS			
Free Flow RPO Code	Ref. Only RPO Code	Description 1 - Equipment group 1SS available on CC15753 Models.	Ext. Cab High-Performance Package 1SS[1]
CF5		**Sunroof**, power, tilt-sliding with express-open and wind deflector, includes (UG1) Universal Home Remote 1 - Requires (CJ2) dual-zone automatic air conditioning. Not available with (AE7) front 40/20/40 split-bench seats.	A[1]
A28		**Window**, rear-sliding 1 - Deletes (C49) rear-window defogger when ordered.	A[1]
U2K		**XM Satellite Radio.** With a wide variety of programming, XM has something to excite any driver. Whether you want to be entertained or informed, to laugh, think, or sing, XM has the perfect channel for you - coast-to-coast, and in digital-quality sound. 3 trial months - no obligation 1 - Available in the 48 contiguous United States. Required $12.95 monthly subscription sold separately. All fees and programming subject to change. Subscription subject to customer agreement. For more information, visit gm.xmradio.com.	A[1]
P30		**Wheels**, 4 - 20" x 8.5" (50.8 cm x 21.6 cm) Sport aluminum	A
YF5		**Emissions**, California state requirements	A
FE9		**Emissions**, Federal requirements	A
NE1		**Emissions**, Maine, Massachusetts, New York or Vermont state requirements	A
NB8		**Emissions override**, California, Massachusetts or New York (for vehicles ordered by dealers in states of California, Massachusetts or New York with Federal emissions) 1 - Requires (FE9) Federal emissions requirements.	A[1]
NC7		**Emissions override, Federal** (for vehicles ordered by dealers in Federal emission states with California, New York, Vermont, Massachusetts or Maine emissions; may also be used by dealers in states of California, New York, Vermont, Massachusetts or Maine to order different state-specific emissions) 1 - Requires (YF5) California state emissions requirements, or (NE1) New York, Vermont, Massachusetts or Maine state emissions requirements.	A[1]
K05		**Engine block heater**	A
Z82		**Trailering equipment**, heavy-duty, includes trailering hitch platform, 7-wire harness (harness includes wires for: park lamps, backup lamps, right turn, left turn, electric brake lead, battery and ground) with independent fused trailering circuits mated to a 7-way sealed connector, instrument panel jumper wiring harness for electric trailer brake controller and 1-way sealed connector for center high-mounted stop/brake lamp and (K47) high-capacity air cleaner	A

S = Standard Equipment A = Available -- (dashes) = Not Available D = ADI Available
■ = Included in Equipment Group □ = Included in Equipment Group but upgradeable

No deletions allowed to Equipment Groups. Additional options may be added; check ordering information section for compatibility.

*Indicates availability of feature on multiple models. For example, it indicates feature availability on 2WD and 4WD Models or Rear wheel drive and All-wheel drive Models.

Codes listed in the shaded column titled Ref. Only RPO Code are for internal use only and should not be ordered.

Free Flow RPO Code	Ref. Only RPO Code	Description 1 - Equipment group 1SS available on CC15753 Models.	Ext. Cab High-Performance Package 1SS[1]
	VF1	**Bumper**, front integrated with the color-keyed front fascia	■
	VF3	**Bumper**, rear integrated with the color-keyed rear fascia	■
	DK7	**Console**, overhead mini	■
	KC4	**Cooling**, external engine oil cooler	■
	KNP	**Cooling**, auxiliary external transmission oil cooler	■
	K34	**Cruise control**	■
	C49	**Defogger**, rear-window	■
	G80	**Differential**, heavy-duty locking rear	■
	AU3	**Door locks**, power	■
	LQ9	**Engine**, Vortec high-output 6.0L V8 SFI	■
		Exhaust, high-performance "throaty" exhaust with NASCAR-inspired polished exhaust tip	■
	B30	**Floor covering**, color-keyed carpeting	■
	AJ1	**Glass**, Solar-Ray deep-tinted	■
	TRB	**Grille**, color-keyed	■
	DF5	**Mirror**, inside rearview	■
	DL3	**Mirrors**, outside heated power-adjustable, power-folding and driver-side auto-dimming, Black	■
	AU0	**Remote Keyless Entry**	■
	B4U	**Silverado SS**	■
	SAF	**Spare tire lock**	■
	NP5	**Steering wheel**, leather-wrapped, Black	■
		Suspension, rear 4-stage multi-leaf springs	■
	Z60	**Suspension Package**, High-Performance	■
	QSS	**Tires**, P275/55R20 touring, blackwall	■
	M32	**Transmission**, 4-speed automatic, heavy-duty	■
	P35	**Wheels**, 4 - 20" x 8.5" (50.8 cm x 21.6 cm) chrome 1 - Upgradeable to (P30) 4 - 20" x 8.5" (50.8 cm x 21.6 cm) Sport aluminum wheels.	□[1]
	A31	**Windows**, power	■

S = Standard Equipment A = Available – (dashes) = Not Available D = ADI Available
■ = Included in Equipment Group □ = Included in Equipment Group but upgradeable

*Indicates availability of feature on multiple models. For example, it indicates feature availability on 2WD and 4WD Models or Rear wheel drive and All-wheel drive Models.

Codes listed in the shaded column titled Ref. Only RPO Code are for internal use only and should not be ordered.

Free Flow RPO Code	Ref. Only RPO Code	Description 1 - Equipment group 1SS available on CC15753 Models.	Ext. Cab High-Performance Package 1SS[1]
		Air bags, frontal, driver and right-front passenger with Passenger Sensing System **1 - Always use safety belts and the correct child restraints for your child's age and size. Even in vehicles equipped with air bags and the Passenger Sensing System, children are safer when properly secured in a rear seat. Never place a rear-facing infant restraint in the front seat of any vehicle equipped with an active frontal air bag. See the vehicle's Owner's Manual and child safety seat instructions for more safety information.**	S[1]
	CJ3	**Air conditioning**, dual-zone manual climate control with individual climate settings for driver and right-front passenger	S
CJ2		**Air conditioning**, dual-zone automatic climate control with individual climate settings for driver and right-front passenger	A
		Assist handles, front passenger and rear outboard	S
	UB0	**Audio system**, AM/FM stereo with CD player, seek-and-scan, digital clock, auto-tone control, Radio Data System (RDS) and speed-compensated volume **1 - Upgradeable to (UC6) AM/FM stereo with 6-disc in-dash CD changer. Requires (AE7) front 40/20/40 split bench seat.**	S[1]
UC6		**Audio system**, AM/FM stereo with 6-disc CD changer, seek-and-scan, digital clock, auto-tone control, Radio Data System (RDS), speed-compensated volume and TheftLock **1 - Requires and only available with (AN3) front full-feature bucket seats with leather seating surfaces.**	A[1]
	UQ7	**Audio system feature**, Bose premium speaker system with sub-woofer in center console **1 - Included and only available with (AN3) front full-feature bucket seats with leather seating surfaces.**	A[1]
		Cigarette lighter, on instrument panel	S
		Coat hooks, driver- and passenger-side rear	S
	D07	**Console**, floor with CD carrier, storage bin, rear cup holders and rear seat heating/cooling outlets **1 - Included and only available with (AN3) front full-feature bucket seats with leather seating surfaces.**	A[1]
	DK7	**Console**, overhead mini with map lights **1 - Not available with (CF5) power sunroof.**	■[1]
	DK8	**Console**, overhead deluxe **1 - Included and only available with (CF5) power sunroof.**	A[1]
	K34	**Cruise control**, electronic with set and resume speed	■
		Cup holders, in console	S
	C49	**Defogger**, rear-window electric **1 - Not available with (A28) sliding rear glass.**	■[1]
	AU3	**Door locks**, power	■

Free Flow RPO Code	Ref. Only RPO Code	Description 1 - Equipment group 1SS available on CC15753 Models.	Ext. Cab High-Performance Package 1SS[1]
		Driver Information Center with trip odometer and message center (monitors numerous systems depending on vehicle equipment level including low fuel, turn signal "on", transmission temperature and oil change notification) **1 - With (UK3) steering wheel controls, includes trip and fuel information selections and programmable personalization features.**	S[1]
	B30	**Floor covering**, color-keyed carpeting with carpeted floor mats	■
		Instrumentation, analog with speedometer, odometer with trip odometer, fuel level, voltmeter, engine hour meter, temperature, oil pressure, transmission temperature gauge, tachometer and white instrument cluster	S
	AU0	**Remote Keyless Entry**, with 2 transmitters, panic button and content theft alarm	■
		Lighting, interior with dome and reading lights, backlit instrument panel switches, rear map lights and door handle-activated illuminated entry	S
	DF5	**Mirror**, inside rearview with 8-point compass, right-front passenger air bag status and outside temperature display	■
UE1		**OnStar**, 1-year of Safe and Sound plan. Includes Automatic Notification of Air Bag Deployment, Stolen Vehicle Location Assistance, Emergency Services, Roadside Assistance, Remote Door Unlock, OnStar Vehicle Diagnostics, Hands-Free Calling, AccidentAssist and Remote Horn & Lights **1 - OnStar services require vehicle electrical system (including battery), wireless service and GPS satellite signals to be available and operating for features to function properly. OnStar acts as a link to existing emergency service providers. OnStar Vehicle Diagnostics available on most 2004 MY and newer GM vehicles. Diagnostic capability varies by model. Visit onstar.com for system limitations and details. Requires (UK3) Steering wheel controls. Not available with a ship-to of Puerto Rico or the Virgin Islands.**	A[1]
PDB		**OnStar Plus Package**, includes (U2K) XM Satellite Radio, (UE1) OnStar and (UK3) steering-wheel mounted audio controls **1 - Package does not include (U2K) XM Satellite Radio when ordered outside the 48 contiguous United States. Not available with a ship-to of Puerto Rico or the Virgin Islands.**	A[1]
R6Q		**OnStar Plus Package discount not desired** **1 - Required when content within option package is ordered and entire package is not desired.**	A[1]
		Power outlets, 2 auxiliary instrument panel-mounted with covers, 12-volt	S
	AE7	**Seats**, front 40/20/40 split-bench, 3-passenger, driver and front passenger manual reclining, includes center fold-down armrest with storage, adjustable outboard head restraints and storage pockets **1 - Not available with (UC6) AM/FM stereo with 6-disc in-dash CD changer.**	S[1]
AN3		**Seats**, power reclining full-feature front bucket with leather seating surfaces, 10-way power driver and front passenger seat adjusters, 2-way power lumbar control, heated seat cushions and seatbacks, 2-position driver memory, adjustable outboard head restraints, floor console, dual inboard armrests and storage pockets	A
		Seats, rear full-width bench, 3-passenger, folding (includes child seat top tether anchor)	S
AG1		**Seat adjuster**, driver 6-way power **1 - With (AN3) front full-feature bucket seats, includes 10-way power seat adjusters.**	A[1]
	AG2	**Seat adjuster**, front passenger 10-way power **1 - Included and only available with (AN3) front full-feature bucket seats with leather seating surfaces.**	A[1]

2007 Chevrolet Truck Silverado SS Classic — INTERIOR

Free Flow RPO Code	Ref. Only RPO Code	Description 1 - Equipment group 1SS available on CC15753 Models.	Ext. Cab High-Performance Package 1SS[1]
	**D	**Seat trim**, Dark Charcoal Custom Cloth 1 - Not available with (AN3) front full-feature bucket seats with leather seating surfaces.	S[1]
	**2	**Seat trim**, Dark Charcoal leather seating surfaces 1 - Included and only available with (AN3) front full-feature bucket seats with leather seating surfaces. Includes front leather seating surfaces with rear vinyl bench.	A[1]
DNH		**Regular production accessory**, Underseat storage, rear, lockable 1 - For additional GM Accessory Offerings and installation, please contact your local GM Accessory Distributor Installer (ADI).	A/D[1]
		Steering column, Tilt-Wheel, adjustable with brake/transmission shift interlock	S
	NP5	**Steering wheel**, leather-wrapped, Black with theft-deterrent locking feature	■
UK3		**Steering wheel controls**, mounted audio and Driver Information Center controls which provides access to enhanced Driver Information Center features and information	A
CF5		**Sunroof**, power, tilt-sliding with express-open and wind deflector, includes (UG1) Universal Home Remote 1 - Requires (CJ2) dual-zone automatic air conditioning. Not available with (AE7) front 40/20/40 split-bench seats.	A[1]
		Theft-deterrent system, PASSlock II	S
		Tools, mechanical jack and wheel wrench, spare tire assist hook, floor-mounted in back of cab	S
	UG1	**Universal Home Remote** 1 - Included and only available with (CF5) power sunroof.	A[1]
		Visors, driver and front passenger, padded with cloth trim, extenders, pocket on driver-side and vanity mirror on passenger-side, Shale-colored	S
		Warning tones, headlamp on, key-in-ignition, driver and passenger buckle up reminder and turn signal on	S
	A31	**Windows**, power with driver and front passenger Express-Down	■
A28		**Window**, rear-sliding 1 - Deletes (C49) rear-window defogger when ordered.	A[1]
U2K		**XM Satellite Radio**. With a wide variety of programming, XM has something to excite any driver. Whether you want to be entertained or informed, to laugh, think, or sing, XM has the perfect channel for you - coast-to-coast, and in digital-quality sound. 3 trial months - no obligation 1 - Available in the 48 contiguous United States. Required $12.95 monthly subscription sold separately. All fees and programming subject to change. Subscription subject to customer agreement. For more information, visit gm.xmradio.com.	A[1]

2007 Chevrolet Truck Silverado SS Classic — EXTERIOR

S = Standard Equipment A = Available – (dashes) = Not Available D = ADI Available
■ = Included in Equipment Group □ = Included in Equipment Group but upgradeable

*Indicates availability of feature on multiple models. For example, it indicates feature availability on 2WD and 4WD Models or Rear wheel drive and All-wheel drive Models.

Codes listed in the shaded column titled Ref. Only RPO Code are for internal use only and should not be ordered.

Free Flow RPO Code	Ref. Only RPO Code	Description 1 - Equipment group 1SS available on CC15753 Models.	Ext. Cab High-Performance Package 1SS[1]
	VF1	**Bumper**, front integrated with the color-keyed front fascia	■
	VF3	**Bumper**, rear integrated with the color-keyed rear fascia	■
		Daytime Running Lamps, with automatic exterior lamp control	S
		Glass, Solar-Ray light-tinted, all windows	S
	AJ1	**Glass**, Solar-Ray deep-tinted (all windows except light-tinted glass on windshield and driver- and front passenger-side glass)	■
	TRB	**Grille**, color-keyed	■
		Headlamps, dual halogen composite with automatic exterior lamp control and flash-to-pass feature	S
		Lamps, dual cargo area lamps	S
	DL3	**Mirrors**, outside heated power-adjustable, power-folding and driver-side auto-dimming, Black with integrated turn signal indicators 1 - Includes curb-tilt feature when (UK3) steering wheel controls are ordered.	■[1]
	ZY1	**Paint**, solid	S
	E63	**Pickup box**, Fleetside	S
	V76	**Recovery hooks**, front, frame-mounted	S
	B4U	**Silverado SS**	■
	SAF	**Spare tire lock**, keyed cylinder lock that utilizes same key as ignition and door	■
		Tire carrier, outside spare, winch-type mounted under frame at rear, steel wheel located at rear underbody of vehicle	S
	QSS	**Tires**, P275/55R20 touring, blackwall	■
	ZAN	**Tire**, spare P265/70R17 blackwall, includes steel wheel located at rear underbody of vehicle	S
	P35	**Wheels**, 4 - 20" x 8.5" (50.8 cm x 21.6 cm) chrome 1 - Upgradeable to (P30) 4 - 20" x 8.5" (50.8 cm x 21.6 cm) Sport aluminum wheels.	□[1]
P30		**Wheels**, 4 - 20" x 8.5" (50.8 cm x 21.6 cm) Sport aluminum	A
		Wheel, 17" (43.2 cm) steel spare	S
		Wipers, front intermittent wet-arm with pulse washers	S

S = Standard Equipment A = Available – (dashes) = Not Available D = ADI Available
■ = Included in Equipment Group □ = Included in Equipment Group but upgradeable

*Indicates availability of feature on multiple models. For example, it indicates feature availability on 2WD and 4WD Models or Rear wheel drive and All-wheel drive Models.

Codes listed in the shaded column titled Ref. Only RPO Code are for internal use only and should not be ordered.

Free Flow RPO Code	Ref. Only RPO Code	Description 1 - Equipment group 1SS available on CC15753 Models.	Ext. Cab High-Performance Package 1SS[1]
	K47	**Air cleaner**, high-capacity **1 - Included and only available with (Z82) heavy-duty trailering equipment.**	A[1]
	KG3	**Alternator**, 145 amps	S
		Battery, heavy-duty 600 cold-cranking amps, maintenance-free with rundown protection and retained accessory power	S
		Brakes, 4-wheel antilock, front disc/rear drum	S
	KC4	**Cooling**, external engine oil cooler, heavy-duty air-to-oil, integral to driver-side of radiator tank	■
	KNP	**Cooling**, auxiliary external transmission oil cooler, heavy-duty air-to-oil	■
	G80	**Differential**, heavy-duty locking rear	■
YF5		**Emissions**, California state requirements	A
FE9		**Emissions**, Federal requirements	A
NE1		**Emissions**, Maine, Massachusetts, New York or Vermont state requirements	A
NB8		**Emissions override**, California, Massachusetts or New York (for vehicles ordered by dealers in states of California, Massachusetts or New York with Federal emissions) **1 - Requires (FE9) Federal emissions requirements.**	A[1]
NC7		**Emissions override**, Federal (for vehicles ordered by dealers in Federal emission states with California, New York, Vermont, Massachusetts or Maine emissions; may also be used by dealers in states of California, New York, Vermont, Massachusetts or Maine to order different state-specific emissions) **1 - Requires (YF5) California state emissions requirements, or (NE1) New York, Vermont, Massachusetts or Maine state emissions requirements.**	A[1]
K05		**Engine block heater**	A
	LQ9	**Engine**, Vortec high-output 6.0L V8 SFI (345 hp [257.0 kW] @ 5200 rpm, 380 lb-ft of torque [513.0 N-m] @ 4000 rpm)	■
		Exhaust, high-performance "throaty" exhaust with NASCAR-inspired polished exhaust tip	■
		Frame, hydroformed ladder-type	S
	Q4B	**GVWR**, 6200 lbs. (2812 kg)	S
	GT4	**Rear axle**, 3.73 ratio	S
		Steering, power	S
		Suspension, front independent with torsion bar and stabilizer bar	S
		Suspension, rear 4-stage multi-leaf springs, semi-elliptic	■
	Z60	**Suspension Package**, High-Performance	■

Free Flow RPO Code	Ref. Only RPO Code	Description 1 - Equipment group 1SS available on CC15753 Models.	Ext. Cab High-Performance Package 1SS[1]
Z82		**Trailering equipment**, heavy-duty, includes trailering hitch platform, 7-wire harness (harness includes wires for: park lamps, backup lamps, right turn, left turn, electric brake lead, battery and ground) with independent fused trailering circuits mated to a 7-way sealed connector, instrument panel jumper wiring harness for electric trailer brake controller and 1-way sealed connector for center high-mounted stop/brake lamp and (K47) high-capacity air cleaner	A
	M32	**Transmission**, 4-speed automatic, heavy-duty, electronically controlled with overdrive, tow/haul mode and external transmission oil cooler (Must specify)	■

2007 Chevrolet Truck Silverado SS Classic — ENGINE/AXLE

S = Standard Equipment A = Available – (dashes) = Not Available
■ = Included in Equipment Group □ = Included in Equipment Group but upgradeable

*Indicates availability of feature on multiple models. For example, it indicates feature availability on 2WD and 4WD Models or Rear wheel drive and All-wheel drive Models.

Model	Engine	Transmissions: M32 4-Speed Automatic	Axles: GT4 3.73	GVWR lbs. (kg): Q4B 6200 (2812)
CC15753	LQ9 Vortec high-output 6.0L V8 SFI	S	S	S

2007 Chevrolet Truck Silverado SS Classic — COLOR AND TRIM - SOLID PAINT

S = Standard Equipment A = Available – (dashes) = Not Available
■ = Included in Equipment Group □ = Included in Equipment Group but upgradeable

*Indicates availability of feature on multiple models. For example, it indicates feature availability on 2WD and 4WD Models or Rear wheel drive and All-wheel drive Models.

Decor Level	Seat Type	Seat Code	Seat Trim	Interior: Dark Charcoal
SS	Front 40/20/40 split-bench	AE7	Custom Cloth	69D[1]
SS	Front full-feature reclining buckets	AN3	Leather Seating Surfaces	692

Exterior Solid Paint	Color Code	Touch Up Paint Number	Interior: Dark Charcoal
Black	41U	WA-8555	A
Silver Birch Metallic	59U	WA-926L	A
Victory Red	74U	WA-9260	A

1 - Not available with (AN3) front power reclining full-feature bucket seats with leather seating surfaces.

S = Standard Equipment A = Available -- (dashes) = Not Available D = ADI Available
■ = Included in Equipment Group □ = Included in Equipment Group but upgradeable

*Indicates availability of feature on multiple models. For example, it indicates feature availability on 2WD and 4WD Models or Rear wheel drive and All-wheel drive Models.

Codes listed in the shaded column titled Ref. Only RPO Code are for internal use only and should not be ordered.

Free Flow RPO Code	Ref. Only RPO Code	Description 1 - Equipment group 1SS available on CC15753 Models.	Ext. Cab High-Performance Package 1SS[1]
R8G		**OnStar 1 Additional Year of Safe and Sound Service (MSRP= $199).** Provides 1 year of Safe and Sound service following the first year of OnStar service included in the price of the vehicle. Fleet may also order (RFB) 2-Years OnStar Business Vehicle Manager Service **1 - Requires one of the following Fleet or Government order types: FLS, FNR, FRC, FBC, FGO or FEF. Not available with R8P, R8U, R8V, R8W, R8Y or R8Z. Requires (UE1) 1-Year OnStar service.**	A[1]
R8P		**OnStar 2 Additional Years of Safe and Sound Service (MSRP=$379)** Provides 2 additional years of Safe and Sound service following the first year of OnStar service included in the price of the vehicle. Fleet may also order (RFC) 3-Years OnStar Business Vehicle Manager Service **1 - Requires one of the following Fleet or Government order types: FLS, FNR, FRC, FBC, FGO or FEF. Not available with R8G, R8U, R8V, R8W, R8Y or R8Z. Requires (UE1) 1-Year OnStar service.**	A[1]
R8U		**OnStar 3-Years Safe and Sound Service (MSRP=$679)** Provides 3 Years of Safe and Sound service. Includes cost of hardware. Fleet may also order (RFC) 3-Years OnStar Business Vehicle Manager Service **1 - Requires one of the following Fleet or Government order types: FLS, FNR, FRC, FBC, FGO or FEF. Requires (UE1) 1-Year OnStar service. Not available with R8G, R8P, R8V, R8W, R8Y or R8Z.**	A[1]
R8V		**OnStar 3-Years Directions and Connections Service (MSRP=$979)** Provides 3 years of Directions and Connections service. Includes cost of hardware. Fleet may also order (RFC) 3-Years OnStar Business Vehicle Manager Service **1 - Requires one of the following Fleet or Government order types: FLS, FNR, FRC, FBC, FGO or FEF. Requires (UE1) 1-Year OnStar service. Not available with R8G, R8P, R8U, R8W, R8Y or R8Z.**	A[1]
R8W		**OnStar 1-Year Directions and Connections Service (MSRP=$100)** Provides an upgrade from Safe and Sound service included in the price of the vehicle in the first year. Fleet may also order (RFA) 1-Year OnStar Business Vehicle Manager Service **1 - Requires one of the following Fleet or Government order types: FLS, FNR, FRC, FBC, FGO or FEF. Not available with R8G, R8P, R8U, R8V, R8Y or R8Z. Requires (UE1) 1-Year OnStar service.**	A[1]
R8Y		**OnStar 2-Years Directions and Connections Service (MSRP=$399)** Provides cumulative 2 Years of Directions and Connections service. In the first year, this is an upgrade from Safe and Sound service included in the price of the vehicle. Fleet may also order (RFB) 2-Years OnStar Business Vehicle Manager Service **1 - Requires one of the following Fleet or Government order types: FLS, FNR, FRC, FBC, FGO or FEF. Not available with R8G, R8P, R8U, R8V, R8W or R8Z. Requires (UE1) 1-Year OnStar service.**	A[1]
R8Z		**OnStar 3-Years Directions and Connections Service (MSRP=$679)** Provides cumulative 3 Years of Directions and Connections service. In the first year, this is an upgrade from Safe and Sound service included in the price of the vehicle. Fleet may also order (RFC) 3-Year OnStar Business Vehicle Manager Service **1 - Requires one of the following Fleet or Government order types: FLS, FNR, FRC, FBC, FGO or FEF. Not available with R8G, R8P, R8U, R8V, R8W or R8Y. Requires (UE1) 1-Year OnStar service.**	A[1]

Free Flow RPO Code	Ref. Only RPO Code	Description 1 - Equipment group 1SS available on CC15753 Models.	Ext. Cab High-Performance Package 1SS[1]
RFA		**OnStar 1-Year Business Vehicle Manager Service (MSRP=$25)** Provides one year of OnStar Business Vehicle Manager Service **1 - Requires one of the following Fleet or Government order types: FLS, FNR, FRC, FBC, FGO or FEF. Not available with RFB or RFC. Requires (UE1) 1-Year OnStar service or (R8W) 1-Year Directions and Connections Service.**	A[1]
RFB		**OnStar 2-Years Business Vehicle Manager Service (No charge)** Provides two years of OnStar Business Vehicle Manager Service **1 - Requires one of the following Fleet or Government order types: FLS, FNR, FRC, FBC, FGO or FEF. Not available with RFA or RFC. Requires (UE1) 1-Year OnStar service and either (R8G) or (R8Y) which provide for a total of two years of OnStar service.**	A[1]
RFC		**OnStar 3-Years Business Vehicle Manager Service (No Charge)** Provides three years of OnStar Business Vehicle Manager Service **1 - Requires one of the following Fleet or Government order types: FLS, FNR, FRC, FBC, FGO or FEF. Not available with RFA or RFB. Requires (UE1) 1-Year OnStar service and either (R8P), (R8U), (R8V), or (R8Z) which provide for a total of three years of OnStar service.**	A[1]

There is no data available for Silverado SS Classic.

All dimensions in inches (mm) unless otherwise stated.

	Specifications		CC15753 2WD Extended Cab Standard Box with B4U
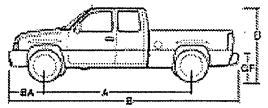	A	Wheelbase	143.50 (3645)
	B	Overall length	227.70 (5784)
		Body width	78.50 (1994)
	D	Overall height	73.90 (1877)
		Head room, front	41.00 (1041)
		Head room, rear	38.40 (975)
		Shoulder room, front	65.20 (1656)
		Shoulder room, rear	66.30 (1684)
		Hip room, front	61.40 (1560)
		Hip room, rear	61.50 (1562)
		Leg room, front	41.30 (1049)
		Leg room, rear	33.70 (856)
		Cab to axle	41.90 (1064)
	BA	Front bumper to axle	36.90 (937)
		Rear bumper to axle	47.00 (1194)
		Opening width, tailgate, top	63.80 (1621)
		Inside length, at floor	78.60 (1996)
		Inside height	19.50 (495)
		Inside width, at floor	64.80 (1646)
		Front bumper to back of cab	138.50 (3518)
	GF	Ground to top of rear load floor	32.90 (836)
		Inside width, between	50.00

2007 Chevrolet Truck Silverado SS Classic — DIMENSIONS

All dimensions in inches (mm) unless otherwise stated.

	Specifications		CC15753 2WD Extended Cab Standard Box with B4U
		wheelhousing	(1270)
		Ground clearance, front	8.00 (203)
		Ground clearance, rear	8.30 (211)

Published dimensions indicated are without optional equipment or accessories. Additional accessories or equipment ordered at the customer's request can result in a minor change in these dimensions.

2007 Chevrolet Truck Silverado SS Classic — SPECS

	CC15753 2WD Extended Cab Standard Box with B4U
Specifications	
Front shock absorber diameter, in. (mm)	1.26 (32)
Front stabilizer bar diameter, in. (mm)	TBD
Rear shock absorber diameter, in. (mm)	1.26 (32)
Turning diameter, curb-to-curb, ft. (m)	TBD
Capacities	
Front axle, lbs. (kg)	3925 (1780)
Front springs, lbs. (kg)	3925 (1780)
Rear axle, lbs. (kg)	4000 (1814)
Rear springs, lbs. (kg)	4000 (1814)
Curb weight, lbs. (kg)	4947 (2244)
Cargo volume, cargo box, cu. ft. (liters)	56.9 (1611.4)
Payload[1], lbs. (kg)	1253 (568)
Gross Vehicle Weight Rating, lbs. (kg)	6200 (2812)
Front Gross Axle Weight Rating, lbs. (kg)	3600 (1633)
Rear Gross Axle Weight Rating, lbs. (kg)	3600 (1633)
Fuel capacity, approximate, gallon (liters)	26 (98)
Seating capacity, max. (front/rear)	3/3

1. Maximum payload capacity includes weight of driver, passengers, optional equipment and cargo.

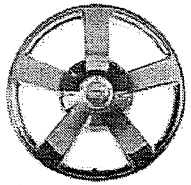	P35 **Wheels**, 4 - 20" x 8.5" (50.8 cm x 21.6 cm) chrome
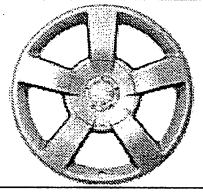	P30 **Wheels**, 4 - 20" x 8.5" (50.8 cm x 21.6 cm) Sport aluminum

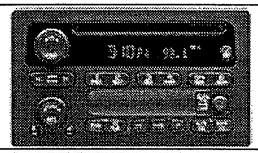	UB0 **Audio system**, AM/FM stereo with CD player, seek-and-scan, digital clock, auto-tone control, Radio Data System (RDS) and speed-compensated volume.
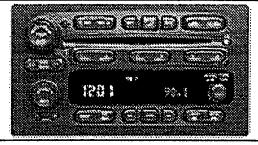	UC6 **Audio system**, AM/FM stereo with 6-disc CD changer, seek-and-scan, digital clock, auto-tone control, Radio Data System (RDS), speed-compensated volume and TheftLock

2007 Chevrolet Truck Silverado SS Classic — TRAILERING SPECS

Maximum trailer ratings are calculated assuming standard equipped vehicle, driver and required trailering equipment. The weight of optional equipment, passengers and cargo will reduce the maximum trailer weight your vehicle can tow. 10 to 15% of the trailer weight is the recommended trailer tongue load.

Automatic Transmission Ratings with Ball Hitch		
Model	(LQ9) Vortec high-output 6.0L V8 SFI	
	Axle Ratio	Maximum Trailer Weight lbs. (kg)
CC15753	4.10	7500 (3402)

Addition of trailer tongue weight cannot cause vehicle weights to exceed Rear Gross Axle Weight Rating (RGAWR) of Gross Vehicle Weight Rating (GVWR).

5th wheel hitch is not recommended on a Silverado SS.

GCWR For Engine/Rear Axle Ratio Combination with Automatic Transmission	
Engine	(GCWR) Gross Combination Weight Ratings lbs. (kg)
	13000 (5897)
(LQ9) Vortec high-output 6.0L V8 SFI	4.10

2007 Chevrolet Truck Silverado SS Classic — RPO CODES

Option Code	Description
**2	Seat trim, Dark Charcoal leather seating surfaces
**D	Seat trim, Dark Charcoal Custom Cloth
A28	Window, rear-sliding
A31	Windows, power
AE7	Seats, front 40/20/40 split-bench
AG1	Seat adjuster, driver 6-way power
AG2	Seat adjuster, front passenger 10-way power
AJ1	Glass, Solar-Ray deep-tinted
AN3	Seats, power reclining full-feature front bucket with leather seating surfaces
AU0	Remote Keyless Entry
AU3	Door locks, power
B30	Floor covering, color-keyed carpeting
B4U	Silverado SS
C49	Defogger, rear-window
CF5	Sunroof, power
CJ2	Air conditioning, dual-zone automatic climate control
CJ3	Air conditioning, dual-zone manual climate control
D07	Console, floor
DF5	Mirror, inside rearview
DK7	Console, overhead mini
DK8	Console, overhead deluxe
DL3	Mirrors, outside heated power-adjustable, power-folding and driver-side auto-dimming, Black
DNH	Regular production accessory, Underseat storage
E63	Pickup box, Fleetside
FE9	Emissions, Federal requirements
G80	Differential, heavy-duty locking rear
GT4	Rear axle, 3.73 ratio
K05	Engine block heater
K34	Cruise control
K47	Air cleaner, high-capacity
KC4	Cooling, external engine oil cooler
KG3	Alternator, 145 amps
KNP	Cooling, auxiliary external transmission oil cooler
LQ9	Engine, Vortec high-output 6.0L V8 SFI
M32	Transmission, 4-speed automatic, heavy-duty
NB8	Emissions override
NC7	Emissions override, Federal
NE1	Emissions, Maine, Massachusetts, New York or Vermont state requirements
NP5	Steering wheel, leather-wrapped, Black
P30	Wheels, 4 - 20" x 8.5" (50.8 cm x 21.6 cm) Sport aluminum
P35	Wheels, 4 - 20" x 8.5" (50.8 cm x 21.6 cm) chrome
PDB	OnStar Plus Package
Q4B	GVWR, 6200 lbs. (2812 kg)
QSS	Tires, P275/55R20 touring, blackwall
R6Q	OnStar Plus Package discount not desired
R8G	OnStar 1 Additional Year of Safe and Sound Service (MSRP= $199)
R8P	OnStar 2 Additional Years of Safe and Sound Service (MSRP=$379)
R8U	OnStar 3-Years Safe and Sound Service (MSRP=$679)

Option Code	Description
R8V	OnStar 3-Years Directions and Connections Service (MSRP=$979)
R8W	OnStar 1-Year Directions and Connections Service (MSRP=$100)
R8Y	OnStar 2-Years Directions and Connections Service (MSRP=$399)
R8Z	OnStar 3-Years Directions and Connections Service (MSRP=$679)
RFA	OnStar 1-Year Business Vehicle Manager Service (MSRP=$25)
RFB	OnStar 2-Years Business Vehicle Manager Service (No charge)
RFC	OnStar 3-Years Business Vehicle Manager Service (No Charge)
SAF	Spare tire lock
TRB	Grille, color-keyed
U2K	XM Satellite Radio
UB0	Audio system, AM/FM stereo with CD player
UC6	Audio system, AM/FM stereo with 6-disc CD changer
UE1	OnStar, 1-year of Safe and Sound plan
UG1	Universal Home Remote
UK3	Steering wheel controls, mounted audio and Driver Information Center controls
UQ7	Audio system feature, Bose premium speaker system
V76	Recovery hooks, front, frame-mounted
VF1	Bumper, front integrated with the color-keyed front fascia
VF3	Bumper, rear integrated with the color-keyed rear fascia
YF5	Emissions, California state requirements
Z60	Suspension Package, High-Performance
Z82	Trailering equipment, heavy-duty
ZAN	Tire, spare P265/70R17 blackwall
ZY1	Paint, solid

Updates for Silverado SS Classic

Week of 7/17/2006

Effective 7/17/2006, the following changes will be made to the Vehicle Order Guide:

- Interior section-Air bags, frontal, added footnote #1 that reads "Always use safety belts and the correct child restraints for your child's age and size. Even in vehicles equipped with air bags and the Passenger Sensing System, children are safer when properly secured in a rear seat. Never place a rear-facing infant restraint in the front seat of any vehicle equipped with an active frontal air bag. See the vehicle's Owner's Manual and child safety seat instructions for more safety information.".

Week of 6/19/2006

Effective 6/19/2006, the following changes will be made to the Vehicle Order Guide:

- All sections-removed the hundred designation (ex: 5300) from all engine descriptions and replaced it with liters designation (ex: 5.3L). Please review entire order guide to see where it changed.

Week of 5/22/2006

Effective 5/22/2006, the following changes will be made to the Vehicle Order Guide:

- OnStar Fleet Options section-please review entire section as many changes have been made.

Week of 5/1/2006

Effective 5/1/2006, the following changes will be made to the Vehicle Order Guide:

- Interior section-(DNH) Regular production accessory, Underseat storage, added footnote that reads "For additional GM Accessory Offerings and Installation, please contact your local GM Accessory Distributor Installer (ADI)." and applies to 1SS package.
- Exterior section-Deleted (SSI) SS Dale Earnhardt Intimidator Edition entirely from Order Guide.

Week of 4/24/2006

Effective 4/24/2006, the following changes will be made to the Vehicle Order Guide:

- Interior section-(U2K) XM Satellite Radio, changed extended description to read " With a wide variety of programming, XM has something to excite any driver. Whether you want to be entertained or informed, to laugh, think, or sing, XM has the perfect channel for you - coast-to-coast, and in digital-quality sound. 3 trial months - no obligation". Also, changed footnote to read "Available in the 48 contiguous United States. Required $12.95 monthly subscription sold separately. All fees and programming subject to change. Subscription subject to customer agreement. For more information, visit gm.xmradio.com.".

Week of 4/17/2006

Effective 4/17/2006, the following changes will be made to the Vehicle Order Guide:

- Interior section-(UC6) Audio system, AM/FM stereo with 6-disc CD changer, changed extended description to read " seek-and-scan, digital clock, auto-tone control, Radio Data System (RDS), speed-compensated volume, and TheftLock".
- Interior section-Added (UQ7) Audio system feature, Bose premium speaker system with sub-woofer in center console. It is available with a footnote that reads "Included and only available with (AN3) front full-feature bucket seats with leather seating surfaces.". and is in the Reference Only column.

2007 Chevrolet Truck Silverado 1500 STANDARD EQUIPMENT
Classic

S = Standard Equipment A = Available – (dashes) = Not Available D = ADI Available

■ = Included in Equipment Group □ = Included in Equipment Group but upgradeable

*Indicates availability of feature on multiple models. For example, it indicates feature availability on 2WD and 4WD Models or Rear wheel drive and All-wheel drive Models.

Codes listed in the shaded column titled Ref. Only RPO Code are for internal use only and should not be ordered.

Free Flow RPO Code	Ref. Only RPO Code	Description 1 - Equipment Groups 1WT and 1LS available on CC15*03, CK15*03, CC15753, CK15753, CC15953 and CK15953 Models. 2 - Equipment Group 2LS available on C*15543 Models. 3 - Equipment Groups 1LT available on all models. 4 - Equipment Groups 2LT and 3LT available on CC15*53, CK15*53, and C*15543 Models.	Reg. and Ext. Cab		Crew Cab	Reg., Ext. and Crew Cab	Ext. and Crew Cab	
			Work Truck 1WT[1]	LS 1LS[1]	LS 2LS[2]	LT1 1LT[3]	LT2 2LT[4]	LT3 3LT[4]
		Air bags, frontal, driver and right-front passenger with Passenger Sensing System 1 - Always use safety belts and the correct child restraints for your child's age and size. Even in vehicles equipped with air bags and the Passenger Sensing System, children are safer when properly secured in a rear seat. Never place a rear-facing infant restraint in the front seat of any vehicle equipped with an active frontal air bag. See the vehicle's Owner's Manual and child safety seat instructions for more safety information.	S[1]	S[1]	S[1]	S[1]	S[1]	S[1]
CJ3		**Air conditioning**, dual-zone manual climate control with individual climate settings for driver and right-front passenger 1 - Standard on Extended Cab models only.	A[1]	S	S	S	–	–
	C42	**Air conditioning delete**, provides heater only 1 - Requires Regular Cab models.	S[1]	–	–	–	–	–
		Assist handle, front passenger 1 - Also includes outboard rear assist handle on Extended or Crew Cab models.	S[1]	S[1]	S[1]	S[1]	S[1]	S[1]
	UM7	**Audio system**, AM/FM stereo with seek-and-scan and digital clock	S	–	–	–	–	–
UB0		**Audio system**, AM/FM stereo with CD player, seek-and-scan, digital clock, auto-tone control, Radio Data System (RDS) and speed-compensated volume 1 - Upgradeable to (UC6) AM/FM stereo with 6-disc in-dash CD changer or (UB1) AM/FM stereo with CD and cassette player when (PDJ) Extended and Crew Cab South-West LT Package is ordered. Includes 4 speakers on Regular Cab and 6 speakers on Extended and Crew Cab models.	A	■	S	□[1]	□[1]	–
	UQ5	**Audio system feature**, 4-speaker system	S	S	–	–	–	–
	UQ3	**Audio system feature**, speaker system 1 - Includes 6 speakers. 2 - Includes 4 speakers on Regular Cab and 6 speakers on Extended and Crew Cab Models.	–	–	S[1]	■[2]	–	–
		Cigarette lighter, on instrument panel	S	S	S	S	S	S
		Coat hook, driver-side rear 1 - Also includes passenger-side coat hook on Extended and Crew Cab models.	S[1]	S[1]	S[1]	S[1]	S[1]	S[1]

2007 Chevrolet Truck Silverado 1500 STANDARD EQUIPMENT
Classic

Free Flow RPO Code	Ref. Only RPO Code	Description 1 - Equipment Groups 1WT and 1LS available on CC15*03, CK15*03, CC15753, CK15753, CC15953 and CK15953 Models. 2 - Equipment Group 2LS available on C*15543 Models. 3 - Equipment Groups 1LT available on all models. 4 - Equipment Groups 2LT and 3LT available on CC15*53, CK15*53, and C*15543 Models.	Reg. and Ext. Cab		Crew Cab	Reg., Ext. and Crew Cab	Ext. and Crew Cab	
			Work Truck 1WT[1]	LS 1LS[1]	LS 2LS[2]	LT1 1LT[3]	LT2 2LT[4]	LT3 3LT[4]
	DK7	**Console**, overhead mini with map lights 1 - Not available with (CF5) power sunroof.	–	–	S	■	■[1]	■[1]
K34		**Cruise control**, electronic with set and resume speed	A	■	S	■	■	■
		Cup holders, front 1 - Also includes rear cupholders on Extended and Crew Cab models.	S[1]	S[1]	S[1]	S[1]	S[1]	S[1]
AU3		**Door locks**, power 1 - Available with Fleet and Government order types only.	A[1]	A	S	■	■	■
		Driver Information Center that monitors numerous different systems depending on vehicle equipment	S	S	S	S	S	S
BG9		**Floor covering**, Black rubberized-vinyl 1 - Not available with C*15543 models. Not available with (922) Medium Gray leather seating surfaces.	S	S	–	A[1]	–	–
B30		**Floor covering**, color-keyed carpeting with rubberized vinyl floor mats (Extended and Crew Cab models also include rear floor mats) 1 - Available with Fleet and Government order types only. Not available with (**V) vinyl interior trim. 2 - Not available with (**V) vinyl interior trim. 3 - May be substituted with (BG9) rubberized vinyl floor covering on Regular and Extended Cab models. Not available with (**V) vinyl interior trim.	A[1]	A[2]	S	□[3]	■	■
		Instrumentation, analog with speedometer, odometer with trip odometer, fuel level, voltmeter, engine temperature, oil pressure and tachometer	S	S	S	S	S	S
		Lighting, interior with dome and reading lights, illuminated entry feature and backlit instrument panel switches	S	S	S	S	S	S
		Mirror, inside rearview manual day/night	S	S	S	–	–	–
		Power outlets, 2 auxiliary instrument panel-mounted with covers, 12-volt	S	S	S	S	S	S
	AU0	**Remote Keyless Entry**, with 2 transmitters, panic button and content theft alarm	–	–	S	■	■	■
	**V	**Seat trim**, vinyl	S	A	–	–	–	–
	**D	**Seat trim**, Custom Cloth	A	■	S	■	■	–
	AE7	**Seats**, front 40/20/40 split-bench, 3-passenger, driver and front passenger manual reclining with outboard head restraints	S	A	–	–	–	–

2007 Chevrolet Truck Silverado 1500 STANDARD EQUIPMENT
Classic

Free Flow RPO Code	Ref. Only RPO Code	Description 1 - Equipment Groups 1WT and 1LS available on CC15*03, CK15*03, CC15753, CK15753, CC15953 and CK15953 Models. 2 - Equipment Group 2LS available on C*15543 Models. 3 - Equipment Groups 1LT available on all models. 4 - Equipment Groups 2LT and 3LT available on CC15*53, CK15*53, and C*15543 Models.	Reg. and Ext. Cab		Crew Cab	Reg., Ext. and Crew Cab	Ext. and Crew Cab	
			Work Truck 1WT[1]	LS 1LS[1]	LS 2LS[2]	LT1 1LT[3]	LT2 2LT[4]	LT3 3LT[4]
	AE7	**Seats**, front 40/20/40 split-bench, 3-passenger, driver and front passenger manual reclining, center fold-down armrest with storage, adjustable outboard head restraints and storage pockets on Extended and Crew Cab models 1 - Requires (**D) Custom Cloth seat trim.	--	■[1]	S	■	--	--
		Seats, rear full-width bench, 3-passenger, folding (includes child seat top tether anchor) 1 - Requires Extended or Crew Cab models.	S[1]	S[1]	S	S[1]	S	S
		Steering column, Tilt-Wheel, adjustable with brake/transmission shift interlock	S	S	S	S	S	S
		Steering wheel, includes theft-deterrent locking feature	S	S	S	--	--	--
		Theft-deterrent system, PASSlock II	S	S	S	S	S	S
		Tools, mechanical jack and wheel wrench located in back of cab	S	S	S	S	S	S
		Visors, driver and front passenger, padded with cloth trim, extenders, pocket on driver-side and vanity mirror on passenger-side, Shale-colored	S	S	S	S	S	S
		Warning tones, headlamp on, key-in-ignition, driver and passenger buckle up reminder and turn signal on	S	S	S	S	S	S
	A31	**Windows**, power with driver and front passenger Express-Down	--	--	S	■	■	■
		Air dam, Gray	S	S	S	S	S	S
	VG3	**Bumper**, front chrome with Gray lower	S	S	S	S	S	S
	V43	**Bumper**, rear painted, step-style with pad	S	--	--	--	--	--
VB3		**Bumper**, rear chrome, step-style with pad	A	■	S	■	■	■
		Daytime Running Lamps, with automatic exterior lamp control	S	S	S	S	S	S
		Glass, Solar-Ray light-tinted, all windows	S	S	S	--	--	--
		Grille, Gray surround with chrome accent bar	S	S	--	--	--	--
	TR3	**Grille**, chrome surround with black insert	--	--	S	■	■	■
		Headlamps, dual halogen composite with automatic exterior lamp control and flash-to-pass feature	S	S	S	S	S	S
		Lamps, dual cargo area lamps	S	S	S	S	S	S
	DE2	**Mirrors**, outside manual, Black, manual-folding	S	S	--	--	--	--

2007 Chevrolet Truck Silverado 1500 STANDARD EQUIPMENT
Classic

Free Flow RPO Code	Ref. Only RPO Code	Description 1 - Equipment Groups 1WT and 1LS available on CC15*03, CK15*03, CC15753, CK15753, CC15953 and CK15953 Models. 2 - Equipment Group 2LS available on C*15543 Models. 3 - Equipment Groups 1LT available on all models. 4 - Equipment Groups 2LT and 3LT available on CC15*53, CK15*53, and C*15543 Models.	Reg. and Ext. Cab		Crew Cab	Reg., Ext. and Crew Cab	Ext. and Crew Cab	
			Work Truck 1WT[1]	LS 1LS[1]	LS 2LS[2]	LT1 1LT[3]	LT2 2LT[4]	LT3 3LT[4]
	DL8	**Mirrors**, outside heated power-adjustable, Black, manual-folding 1 - Upgradeable to (DL3) outside, heated, power-adjustable, power-folding, Black mirrors or (DPN) outside vertical camper mirrors.	--	--	S	□[1]	□[1]	--
B85		**Moldings**, bodyside 1 - Moldings are Black. 2 - Moldings are body-colored with chrome insert, see Color and Trim chart for compatibility.	--	A[1]	S[2]	■[2]	■[2]	■[2]
	ZY1	**Paint**, solid	S	S	S	S	S	S
	E63	**Pickup box**, Fleetside	S	S	S	S	S	S
	V76	**Recovery hooks**, front, frame-mounted	S	S	S	S	S	S
		Tire carrier, outside spare, winch-type mounted under frame at rear	S	S	S	S	S	S
		Tire, full-size spare, 17" (43.2 cm) steel, located at rear underbody of vehicle	S	S	S	S	S	S
	QPR	**Tires**, P245/70R17 all-season, blackwall 1 - Requires 2WD models.	S[1]	S[1]	S[1]	S[1]	S[1]	S[1]
	QVL	**Tires**, P265/70R17 all-season, blackwall 1 - Requires 4x4 Regular and Extended Cab models. 2 - Requires 4x4 Extended Cab models.	S[1]	S[1]	--	S[1]	S[2]	S[2]
QJP		**Tires**, P265/70R17 on-/off-road, blackwall, includes an on-/off-road blackwall spare 1 - Requires CK15953 models and (Z85) Handling/Trailering Suspension Package and Fleet or Government order types. 2 - Requires 4x4 models. 3 - Requires 4x4 models. With CK15*03 and CK15*53 models requires (Z71) Off-Road Suspension Package. With CK15953 models and Fleet or Government order types or CK15543 models requires (Z71) Off-Road Suspension Package or (Z85) Handling/Trailering Suspension Package. Also available with 2WD and 4x4 (NHT) Vortec Max Performance Pack. Not available with (B2E) Silverado Limited Edition or (B4V) Silverado Performance Edition.	A[1]	A[1]	S[2]	A[3]	A[3]	A[3]
		Wheels, 4 - 17" x 7" (43.2 cm x 17.8 cm) 6-lug painted steel, includes painted center caps and steel spare	S	--	--	--	--	--
	PY9	**Wheels**, 4 - 17" x 7.5" (43.2 cm x 19.1 cm) 6-lug chrome-styled steel, includes chrome center caps and steel spare 1 - Upgradeable to (P25) 4 - 17" x 7.5" (43.2 cm x 19.1 cm) 6-lug polished cast aluminum wheels.	--	■	S	□[1]	□[1]	--
		Wipers, front intermittent wet-arm with pulse washers	S	S	S	S	S	S
	KG3	**Alternator**, 145 amps	S	S	S	S	S	S

2007 Chevrolet Truck Silverado 1500 Classic STANDARD EQUIPMENT

Free Flow RPO Code	Ref. Only RPO Code	Description 1 - Equipment Groups 1WT and 1LS available on CC15*03, CK15*03, CC15753, CK15753, CC15953 and CK15953 Models. 2 - Equipment Group 2LS available on C*15543 Models. 3 - Equipment Groups 1LT available on all models. 4 - Equipment Groups 2LT and 3LT available on CC15*53, CK15*53, and C*15543 Models.	Reg. and Ext. Cab		Crew Cab	Reg., Ext. and Crew Cab	Ext. and Crew Cab	
			Work Truck 1WT[1]	LS 1LS[1]	LS 2LS[2]	LT1 1LT[3]	LT2 2LT[4]	LT3 3LT[4]
		Battery, heavy-duty 600 cold-cranking amps, maintenance-free with rundown protection and retained accessory power	S	S	S	S	S	S
		Brakes, 4-wheel antilock, front disc/rear drum	S	S	S	S	S	S
LR4		**Engine**, Vortec 4.8L V8 SFI (285 hp [212.3 kW] @ 5200 rpm, 295 lb-ft of torque [398.2 N-m] @ 4000 rpm) 1 - Standard on CK15753 models only. 2 - Not standard on C*15953 models. Not available with C*15543 or C*15553 models.	A[1]	A[1]	S	■[2]	--	--
		Exhaust, aluminized stainless-steel muffler and tailpipe	S	S	S	S	S	S
		Frame, hydroformed ladder-type	S	S	S	S	S	S
	C5M	GVWR, 6100 lbs. (2767 kg) 1 - Requires CC15703 models.	S[1]	S[1]	--	S[1]	--	--
	Q4B	GVWR, 6200 lbs. (2812 kg) 1 - Requires CC15553 models or CC15753 models. Not available with CC15753 models and (LM7) Vortec 5.3L V8 SFI engine.	S[1]	S[1]	--	S[1]	S[1]	S[1]
	C7H	GVWR, 6400 lbs. (2903 kg) 1 - Requires C*15903, CK15703, CK15753, C*15953, or CK15553 models.	S[1]	S[1]	--	S[1]	S[1]	S[1]
	C7K	GVWR, 6500 lbs. (2948 kg) 1 - Requires CC15753 models and (LM7) Vortec 5.3L V8 SFI engine.	S[1]	S[1]	--	S[1]	S[1]	S[1]
	C3J	GVWR, 6700 lbs. (3039 kg) 1 - Requires CC15953 models and (LM7) Vortec 5.3L V8 SFI engine or CK15753 models and (L33) Vortec 5.3L V8 SFI engine.	S[1]	S[1]	--	S[1]	S[1]	S[1]
	C5H	GVWR, 6900 lbs. (3130 kg) 1 - Requires CC15543 models or CK15953 models and (LM7) Vortec 5.3L V8 SFI engine. 2 - Requires CC15543 models.	S[1]	S[1]	S[2]	S[1]	S[1]	S[1]
	C5W	GVWR, 7000 lbs. (3175 kg) 1 - Requires CK15543 models.	--	--	S[1]	S[1]	S[1]	S[1]
		Steering, power	S	S	S	S	S	S
		Suspension, front independent 1 - 2WD models include coil springs. 4x4 models include torsion bars.	S[1]	S[1]	S[1]	S[1]	S[1]	S[1]
		Suspension, rear 2-stage multi-leaf springs, semi-elliptic 1 - Standard on Regular and Extended Cab models only.	S	S	--	S[1]	S[1]	S[1]
		Suspension, rear 3-stage springs 1 - Standard on Crew Cab models only.	--	--	S	S[1]	S[1]	S[1]

2007 Chevrolet Truck Silverado 1500 Classic STANDARD EQUIPMENT

Free Flow RPO Code	Ref. Only RPO Code	Description 1 - Equipment Groups 1WT and 1LS available on CC15*03, CK15*03, CC15753, CK15753, CC15953 and CK15953 Models. 2 - Equipment Group 2LS available on C*15543 Models. 3 - Equipment Groups 1LT available on all models. 4 - Equipment Groups 2LT and 3LT available on CC15*53, CK15*53, and C*15543 Models.	Reg. and Ext. Cab		Crew Cab	Reg., Ext. and Crew Cab	Ext. and Crew Cab	
			Work Truck 1WT[1]	LS 1LS[1]	LS 2LS[2]	LT1 1LT[3]	LT2 2LT[4]	LT3 3LT[4]
	Z83	**Suspension Package**, Solid Smooth Ride, includes 35 mm piston twin tube shocks 1 - Not available with (PDU) Light Duty Power Package. 2 - Requires C*15*03, C*15753 or C*15953 models	S[1]	S[1]	--	S[2]	--	--
Z85		**Suspension Package**, Handling/Trailering, includes 36 mm piston monotube shocks 1 - Standard on C*15553 and C*15543 models.	A	A	S	A[1]	■[1]	■[1]
	NP2	**Transfer case**, floor-mounted shifter 1 - Standard with 4x4 Regular and Extended Cab models only. 2 - Requires 4x4 models.	S[1]	S[1]	S[2]	S[1]	--	--
	MG5	**Transmission**, 5-speed manual with overdrive 1 - Requires Regular Cab models and (LU3) Vortec 4.3L V6 MFI engine.	S[1]	S[1]	--	--	--	--
M30		**Transmission**, 4-speed automatic, electronically controlled with overdrive and tow/haul mode 1 - Standard on Extended Cab models only.	A[1]	A[1]	S	S	S	S

2007 Chevrolet Truck Silverado 1500 EQUIPMENT GROUPS
Classic

S = Standard Equipment A = Available – (dashes) = Not Available D = ADI Available
■ = Included in Equipment Group □ = Included in Equipment Group but upgradeable

No deletions allowed to Equipment Groups. Additional options may be added; check ordering information section for compatibility.

*Indicates availability of feature on multiple models. For example, it indicates feature availability on 2WD and 4WD Models or Rear wheel drive and All-wheel drive Models.

Codes listed in the shaded column titled Ref. Only RPO Code are for internal use only and should not be ordered.

Free Flow RPO Code	Ref. Only RPO Code	Description 1 - Equipment Groups 1WT and 1LS available on CC15*03, CK15*03, CC15753, CK15753, CC15953 and CK15953 Models. 2 - Equipment Group 2LS available on C*15543 Models. 3 - Equipment Groups 1LT available on all models. 4 - Equipment Groups 2LT and 3LT available on CC15*53, CK15*53, and C*15543 Models.	Reg. and Ext. Cab		Crew Cab	Reg., Ext. and Crew Cab	Ext. and Crew Cab	
			Work Truck 1WT[1]	LS 1LS[1]	LS 2LS[2]	LT1 1LT[3]	LT2 2LT[4]	LT3 3LT[4]
CJ2		**Air conditioning**, dual-zone automatic climate control with individual climate settings for driver and right-front passenger 1 - Not available with Regular models or (VYU) Snow Plow Prep Package.	–	–	–	A[1]	■	■
UB0		**Audio system**, AM/FM stereo with CD player, seek-and-scan, digital clock, auto-tone control, Radio Data System (RDS) and speed-compensated volume 1 - Upgradeable to (UC6) AM/FM stereo with 6-disc in-dash CD changer or (UB1) AM/FM stereo with CD and cassette player when (PDJ) Extended and Crew Cab South-West LT Package is ordered. Includes 4 speakers on Regular Cab and 6 speakers on Extended and Crew Cab models.	A	■	S	□[1]	□[1]	–
UC6		**Audio system**, AM/FM stereo with 6-disc CD changer, seek-and-scan, digital clock, auto-tone control, Radio Data System (RDS), speed-compensated volume and TheftLock	–	–	–	A	A	■
	UQ3	**Audio system feature**, speaker system 1 - Includes 6 speakers. 2 - Includes 4 speakers on Regular Cab and 6 speakers on Extended and Crew Cab Models.	–	–	S[1]	■[2]	–	–
	UQ7	**Audio system feature**, Bose premium speaker system with sub-woofer in center console 1 - Included and only available with (A95) front reclining bucket seats.	–	–	–	A[1]	■	■
	UK6	**Audio system controls**, rear with 2 headphone jacks (headphones not included), power outlet and controls for volume, station selection and media 1 - Requires Crew Cab Models. Included and only available with (A95) front reclining bucket seats. 2 - Requires Crew Cab models.	–	–	–	A[1]	■[2]	■[2]
	D07	**Console**, floor with storage compartment and dual cup holders 1 - Included and only available with (A95) front reclining bucket seats.	–	–	–	A[1]	■	■

2007 Chevrolet Truck Silverado 1500 EQUIPMENT GROUPS
Classic

Free Flow RPO Code	Ref. Only RPO Code	Description 1 - Equipment Groups 1WT and 1LS available on CC15*03, CK15*03, CC15753, CK15753, CC15953 and CK15953 Models. 2 - Equipment Group 2LS available on C*15543 Models. 3 - Equipment Groups 1LT available on all models. 4 - Equipment Groups 2LT and 3LT available on CC15*53, CK15*53, and C*15543 Models.	Reg. and Ext. Cab		Crew Cab	Reg., Ext. and Crew Cab	Ext. and Crew Cab	
			Work Truck 1WT[1]	LS 1LS[1]	LS 2LS[2]	LT1 1LT[3]	LT2 2LT[4]	LT3 3LT[4]
	DK7	**Console**, overhead mini with map lights 1 - Not available with (CF5) power sunroof.	–	–	S	■	■[1]	■[1]
K34		**Cruise control**, electronic with set and resume speed	A	■	S	■	■	■
C49		**Defogger**, rear-window electric 1 - Not available with (A28) sliding rear window or (C42) air conditioning delete. Available with Fleet and Government order types only. 2 - Not available with (A28) sliding rear window.	A[1]	■[2]	A[2]	■[2]	■[2]	■[2]
AU3		**Door locks**, power 1 - Available with Fleet and Government order types only.	A[1]	A	S	■	■	■
B30		**Floor covering**, color-keyed carpeting with rubberized vinyl floor mats (Extended and Crew Cab models also include rear floor mats) 1 - Available with Fleet and Government order types only. Not available with (**V) vinyl interior trim. 2 - Not available with (**V) vinyl interior trim. 3 - May be substituted with (BG9) rubberized vinyl floor covering on Regular and Extended Cab models. Not available with (**V) vinyl interior trim.	A[1]	A[2]	S	□[3]	■	■
	DF5	**Mirror**, inside rearview auto-dimming with 8-point compass and outside temperature display	–	–	–	■	■	■
	AU0	**Remote Keyless Entry**, with 2 transmitters, panic button and content theft alarm	–	–	S	■	■	■
	**D	**Seat trim**, Custom Cloth	A	■	S	■	■	–
	**2	**Seat trim**, leather 1 - Not available on Regular Cab models. Extended Cab models include front leather seating surfaces with rear vinyl bench. Crew Cab models include front and rear leather-appointed seating surfaces.	–	–	–	A[1]	A[1]	■[1]
	AE7	**Seats**, front 40/20/40 split-bench, 3-passenger, driver and front passenger manual reclining, center fold-down armrest with storage, adjustable outboard head restraints and storage pockets on Extended and Crew Cab models 1 - Requires (**D) Custom Cloth seat trim.	–	■[1]	S	■	–	–
A95		**Seats**, front bucket, includes (AG1) 6-way power driver seat adjuster, front passenger manual recline, adjustable outboard head restraints, inboard armrests and storage pockets 1 - Requires Extended or Crew Cab Models. - Requires Fleet and Government order types only. Includes (D07) floor console and (UQ7) Bose Premium speaker system. Also includes (UK6) rear audio controls on Crew Cab Models. On 4WD Models, also requires (NP8) electronic Autotrac transfer case.	–	–	–	A[1]	■	–

2007 Chevrolet Truck Silverado 1500 EQUIPMENT GROUPS
Classic

Free Flow RPO Code	Ref. Only RPO Code	Description 1 - Equipment Groups 1WT and 1LS available on CC15*03, CK15*03, CC15753, CK15753, CC15953 and CK15953 Models. 2 - Equipment Group 2LS available on C*15543 Models. 3 - Equipment Groups 1LT available on all models. 4 - Equipment Groups 2LT and 3LT available on CC15*53, CK15*53, and C*15543 Models.	Reg. and Ext. Cab		Crew Cab	Reg., Ext. and Crew Cab	Ext. and Crew Cab	
			Work Truck 1WT[1]	LS 1LS[1]	LS 2LS[2]	LT1 1LT[3]	LT2 2LT[4]	LT3 3LT[4]
	AN3	**Seats**, front bucket, includes 10-way power driver and front passenger seat adjusters, 2-way power lumbar control, heated seat cushions and seatbacks, 2-position driver memory, adjustable outboard head restraints, floor console, dual inboard armrests and storage pockets	--	--	--	--	--	■
AG1		**Seat adjuster**, driver 6-way power 1 - Included with (**2) Seat trim, leather seating surfaces on Extended or Crew Cab Models. Included with (A95) front reclining bucket seats. 2 - With (AN3) front full-feature bucket seats, includes 10-way power seat adjusters.	--	--	--	A[1]	■	■[2]
	AG2	**Seat adjuster**, front passenger 10-way power 1 - Included and only available with (AN3) front full-feature bucket seats.	--	--	--	--	--	■[1]
	NP5	**Steering wheel**, leather-wrapped, Black with theft-deterrent locking feature	--	--	--	■	■	■
UK3		**Steering wheel controls**, mounted audio and Driver Information Center controls which provides access to enhanced Driver Information Center features and information	--	--	--	A	■	■
	A31	**Windows**, power with driver and front passenger Express-Down	--	--	S	■	■	■
VB3		**Bumper**, rear chrome, step-style with pad	A	■	S	■	■	■
T96		**Fog lamps**, front, halogen	--	--	--	A	■	■
AJ1		**Glass**, Solar-Ray deep-tinted (all windows except light-tinted glass on windshield and driver- and front passenger-side glass) 1 - With Extended Cab models, includes rear window and rear quarter windows. With Crew Cab models or (C49) rear-window defogger, includes light-tinted rear window.	A[1]	A[1]	A[1]	■[1]	■[1]	■[1]
	TR3	**Grille**, chrome surround with black insert	--	--	S	■	■	■
	DL8	**Mirrors**, outside heated power-adjustable, Black, manual-folding 1 - Upgradeable to (DL3) outside, heated, power-adjustable, power-folding, Black mirrors or (DPN) outside vertical camper mirrors.	--	--	S	□[1]	□[1]	--

2007 Chevrolet Truck Silverado 1500 EQUIPMENT GROUPS
Classic

Free Flow RPO Code	Ref. Only RPO Code	Description 1 - Equipment Groups 1WT and 1LS available on CC15*03, CK15*03, CC15753, CK15753, CC15953 and CK15953 Models. 2 - Equipment Group 2LS available on C*15543 Models. 3 - Equipment Groups 1LT available on all models. 4 - Equipment Groups 2LT and 3LT available on CC15*53, CK15*53, and C*15543 Models.	Reg. and Ext. Cab		Crew Cab	Reg., Ext. and Crew Cab	Ext. and Crew Cab	
			Work Truck 1WT[1]	LS 1LS[1]	LS 2LS[2]	LT1 1LT[3]	LT2 2LT[4]	LT3 3LT[4]
DL3		**Mirrors**, outside heated power-adjustable, power-folding and driver-side auto-dimming, Black with integrated turn signal indicators 1 - Curb-tilt feature requires (UK3) steering-wheel mounted audio controls. 2 - Upgradeable to (DPN) outside vertical camper mirrors. Includes curb-tilt when (UK3) steering-wheel mounted audio controls is ordered.	--	--	--	A[1]	A[1]	□[2]
B85		**Moldings**, bodyside 1 - Moldings are Black. 2 - Moldings are body-colored with chrome insert, see Color and Trim chart for compatibility.	--	A[1]	S[2]	■[2]	■[2]	■[2]
	PY9	**Wheels**, 4 - 17" x 7.5" (43.2 cm x 19.1 cm) 6-lug chrome-styled steel, includes chrome center caps and steel spare 1 - Upgradeable to (P25) 4 - 17" x 7.5" (43.2 cm x 19.1 cm) 6-lug polished cast aluminum wheels.	--	■	S	□[1]	□[1]	--
P25		**Wheels**, 4 - 17" x 7.5" (43.2 cm x 19.1 cm) 6-lug polished cast aluminum, includes steel spare	--	--	--	A	A	■
LR4		**Engine**, Vortec 4.8L V8 SFI (285 hp [212.3 kW] @ 5200 rpm, 295 lb-ft of torque [398.2 N-m] @ 4000 rpm) 1 - Standard on CK15753 models only. 2 - Not standard on C*15953 models. Not available with C*15543 or C*15553 models.	A[1]	A[1]	S	■[2]	--	--
L33		**Engine**, Vortec 5.3L V8 SFI, aluminum block with steel cylinder sleeves (310 hp [231.4 kW] @ 5200 rpm, 335 lb-ft of torque (452.3 N-m] @ 4000 rpm) 1 - Requires CK15753 models and included with (PDU) Light Duty Power Package.	A[1]	A[1]	--	A[1]	■[1]	■[1]
Z85		**Suspension Package**, Handling/Trailering, includes 36 mm piston monotube shocks 1 - Standard on C*15553 and C*15543 models.	A	A	S	A[1]	■[1]	■[1]
NP8		**Transfer case**, electronic Autotrac with push-button controls 1 - Requires 4WD Models. - Standard on 4WD Crew Cab Models only. Required when (A95) front reclining buckets seats are ordered on Fleet and Government order types. 2 - Requires 4x4 models. Standard on 4x4 Crew Cab models only.	--	--	--	A[1]	■[2]	■[2]

2007 Chevrolet Truck Silverado 1500 EQUIPMENT GROUPS
Classic

S = Standard Equipment A = Available – (dashes) = Not Available D = ADI Available
■ = Included in Equipment Group. □ = Included in Equipment Group but upgradeable

No deletions allowed to Equipment Groups. Additional options may be added; check ordering information section for compatibility.

*Indicates availability of feature on multiple models. For example, it indicates feature availability on 2WD and 4WD Models or Rear wheel drive and All-wheel drive Models.

Codes listed in the shaded column titled Ref. Only RPO Code are for internal use only and should not be ordered.

Free Flow RPO Code	Ref. Only RPO Code	Description 1 - Equipment Groups 1WT and 1LS available on CC15*03, CK15*03, CC15753, CK15753, CC15953 and CK15953 Models. 2 - Equipment Group 2LS available on C*15543 Models. 3 - Equipment Groups 1LT available on all models. 4 - Equipment Groups 2LT and 3LT available on CC15*53, CK15*53, and C*15543 Models.	Reg. and Ext. Cab		Crew Cab	Reg., Ext. and Crew Cab	Ext. and Crew Cab	
			Work Truck 1WT[1]	LS 1LS[1]	LS 2LS[2]	LT1 1LT[3]	LT2 2LT[4]	LT3 3LT[4]
CJ2		**Air conditioning**, dual-zone automatic climate control with individual climate settings for driver and right-front passenger 1 - Not available with Regular models or (VYU) Snow Plow Prep Package.	–	–	–	A[1]	■	■
UB0		**Audio system**, AM/FM stereo with CD player, seek-and-scan, digital clock, auto-tone control, Radio Data System (RDS) and speed-compensated volume 1 - Upgradeable to (UC6) AM/FM stereo with 6-disc in-dash CD changer or (UB1) AM/FM stereo with CD and cassette player when (PDJ) Extended and Crew Cab South-West LT Package is ordered. Includes 4 speakers on Regular Cab and 6 speakers on Extended and Crew Cab models.	A	■	S	□[1]	□[1]	–
UC6		**Audio system**, AM/FM stereo with 6-disc CD changer, seek-and-scan, digital clock, auto-tone control, Radio Data System (RDS), speed-compensated volume and TheftLock	–	–	–	A	A	■
	UQ3	**Audio system feature**, speaker system 1 - Includes 6 speakers. 2 - Includes 4 speakers on Regular Cab and 6 speakers on Extended and Crew Cab Models.	–	–	S[1]	■[2]	–	–
	UQ7	**Audio system feature**, Bose premium speaker system with sub-woofer in center console 1 - Included and only available with (A95) front reclining bucket seats.	–	–	–	A[1]	■	■
	UK6	**Audio system controls**, rear with 2 headphone jacks (headphones not included), power outlet and controls for volume, station selection and media 1 - Requires Crew Cab Models. Included and only available with (A95) front reclining bucket seats. 2 - Requires Crew Cab models.	–	–	–	A[1]	■[2]	■[2]
	D07	**Console**, floor with storage compartment and dual cup holders 1 - Included and only available with (A95) front reclining bucket seats.	–	–	–	A[1]	■	■

2007 Chevrolet Truck Silverado 1500 EQUIPMENT GROUPS
Classic

Free Flow RPO Code	Ref. Only RPO Code	Description 1 - Equipment Groups 1WT and 1LS available on CC15*03, CK15*03, CC15753, CK15753, CC15953 and CK15953 Models. 2 - Equipment Group 2LS available on C*15543 Models. 3 - Equipment Groups 1LT available on all models. 4 - Equipment Groups 2LT and 3LT available on CC15*53, CK15*53, and C*15543 Models.	Reg. and Ext. Cab		Crew Cab	Reg., Ext. and Crew Cab	Ext. and Crew Cab	
			Work Truck 1WT[1]	LS 1LS[1]	LS 2LS[2]	LT1 1LT[3]	LT2 2LT[4]	LT3 3LT[4]
	DK7	**Console**, overhead mini-with map lights 1 - Not available with (CF5) power sunroof.	–	–	S	■	■[1]	■[1]
K34		**Cruise control**, electronic with set and resume speed	A	■	S	■	■	■
C49		**Defogger**, rear-window electric 1 - Not available with (A28) sliding rear window or (C42) air conditioning delete. Available with Fleet and Government order types only. 2 - Not available with (A28) sliding rear window.	A[1]	■[2]	A[2]	■[2]	■[2]	■[2]
AU3		**Door locks**, power 1 - Available with Fleet and Government order types only.	A[1]	A	S	■	■	■
B30		**Floor covering**, color-keyed carpeting with rubberized vinyl floor mats (Extended and Crew Cab models also include rear floor mats) 1 - Available with Fleet and Government order types only. Not available with (**V) vinyl interior trim. 2 - Not available with (**V) vinyl interior trim. 3 - May be substituted with (BG9) rubberized vinyl floor covering on Regular and Extended Cab models. Not available with (**V) vinyl interior trim.	A[1]	A[2]	S	□[3]	■	■
	DF5	**Mirror**, inside rearview auto-dimming with 8-point compass and outside temperature display	–	–	–	■	■	■
	AU0	**Remote Keyless Entry**, with 2 transmitters, panic button and content theft alarm	–	–	S	■	■	■
	**D	**Seat trim**, Custom Cloth	A	■	S	■	■	–
	**2	**Seat trim**, leather 1 - Not available on Regular Cab models. Extended Cab models include front leather seating surfaces with rear vinyl bench. Crew Cab models include front and rear leather-appointed seating surfaces.	–	–	–	A[1]	A[1]	■[1]
	AE7	**Seats**, front 40/20/40 split-bench, 3-passenger, driver and front passenger manual reclining, center fold-down armrest with storage, adjustable outboard head restraints and storage pockets on Extended and Crew Cab models 1 - Requires (**D) Custom Cloth seat trim.	–	■[1]	S	■	–	–
A95		**Seats**, front bucket, includes (AG1) 6-way power driver seat adjuster, front passenger manual recline, adjustable outboard head restraints, inboard armrests and storage pockets 1 - Requires Extended or Crew Cab Models. - Requires Fleet and Government order types only. Includes (D07) floor console and (UQ7) Bose Premium speaker system. Also includes (UK6) rear audio controls on Crew Cab Models. On 4WD Models, also requires (NP8) electronic Autotrac transfer case.	–	–	–	A[1]	■	–

2007 Chevrolet Truck Silverado 1500 EQUIPMENT GROUPS
Classic

Free Flow RPO Code	Ref. Only RPO Code	Description 1 - Equipment Groups 1WT and 1LS available on CC15*03, CK15*03, CC15753, CK15753, CC15953 and CK15953 Models. 2 - Equipment Group 2LS available on C*15543 Models. 3 - Equipment Groups 1LT available on all models. 4 - Equipment Groups 2LT and 3LT available on CC15*53, CK15*53, and C*15543 Models.	Reg. and Ext. Cab		Crew Cab	Reg., Ext. and Crew Cab	Ext. and Crew Cab	
			Work Truck 1WT[1]	LS 1LS[1]	LS 2LS[2]	LT1 1LT[3]	LT2 2LT[4]	LT3 3LT[4]
	AN3	**Seats**, front bucket, includes 10-way power driver and front passenger seat adjusters, 2-way power lumbar control, heated seat cushions and seatbacks, 2-position driver memory, adjustable outboard head restraints, floor console, dual inboard armrests and storage pockets	--	--	--	--	--	■
AG1		**Seat adjuster**, driver 6-way power 1 - Included with (**2) Seat trim, leather seating surfaces on Extended or Crew Cab Models. Included with (A95) front reclining bucket seats. 2 - With (AN3) front full-feature bucket seats, includes 10-way power seat adjusters.	--	--	--	A[1]	■	■[2]
	AG2	**Seat adjuster**, front passenger 10-way power 1 - Included and only available with (AN3) front full-feature bucket seats.	--	--	--	--	--	■[1]
	NP5	**Steering wheel**, leather-wrapped, Black with theft-deterrent locking feature	--	--	--	■	■	■
UK3		**Steering wheel controls**, mounted audio and Driver Information Center controls which provides access to enhanced Driver Information Center features and information	--	--	--	A	■	■
	A31	**Windows**, power with driver and front passenger Express-Down	--	--	S	■	■	■
VB3		**Bumper**, rear chrome, step-style with pad	A	■	S	■	■	■
T96		**Fog lamps**, front, halogen	--	--	--	A	■	■
AJ1		**Glass**, Solar-Ray deep-tinted (all windows except light-tinted glass on windshield and driver- and front passenger-side glass) 1 - With Extended Cab models, includes rear window and rear quarter windows. With Crew Cab models or (C49) rear-window defogger, includes light-tinted rear window.	A[1]	A[1]	A[1]	■[1]	■[1]	■[1]
	TR3	**Grille**, chrome surround with black insert	--	--	S	■	■	■
	DL8	**Mirrors**, outside heated power-adjustable, Black, manual-folding 1 - Upgradeable to (DL3) outside, heated, power-adjustable, power-folding, Black mirrors or (DPN) outside vertical camper mirrors.	--	--	S	□[1]	□[1]	--

2007 Chevrolet Truck Silverado 1500 EQUIPMENT GROUPS
Classic

Free Flow RPO Code	Ref. Only RPO Code	Description 1 - Equipment Groups 1WT and 1LS available on CC15*03, CK15*03, CC15753, CK15753, CC15953 and CK15953 Models. 2 - Equipment Group 2LS available on C*15543 Models. 3 - Equipment Groups 1LT available on all models. 4 - Equipment Groups 2LT and 3LT available on CC15*53, CK15*53, and C*15543 Models.	Reg. and Ext. Cab		Crew Cab	Reg., Ext. and Crew Cab	Ext. and Crew Cab	
			Work Truck 1WT[1]	LS 1LS[1]	LS 2LS[2]	LT1 1LT[3]	LT2 2LT[4]	LT3 3LT[4]
DL3		**Mirrors**, outside heated power-adjustable, power-folding and driver-side auto-dimming, Black with integrated turn signal indicators 1 - Curb-tilt feature requires (UK3) steering-wheel mounted audio controls. 2 - Upgradeable to (DPN) outside vertical camper mirrors. Includes curb-tilt when (UK3) steering-wheel mounted audio controls is ordered.	--	--	--	A[1]	A[1]	□[2]
B85		**Moldings**, bodyside 1 - Moldings are Black. 2 - Moldings are body-colored with chrome insert, see Color and Trim chart for compatibility.	--	A[1]	S[2]	■[2]	■[2]	■[2]
	PY9	**Wheels**, 4 - 17" x 7.5" (43.2 cm x 19.1 cm) 6-lug chrome-styled steel, includes chrome center caps and steel spare 1 - Upgradeable to (P25) 4 - 17" x 7.5" (43.2 cm x 19.1 cm) 6-lug polished cast aluminum wheels.	--	■	S	□[1]	□[1]	--
P25		**Wheels**, 4 - 17" x 7.5" (43.2 cm x 19.1 cm) 6-lug polished cast aluminum, includes steel spare	--	--	--	A	A	■
LR4		**Engine**, Vortec 4.8L V8 SFI (285 hp [212.3 kW] @ 5200 rpm, 295 lb-ft of torque [398.2 N-m] @ 4000 rpm) 1 - Standard on CK15753 models only. 2 - Not standard on C*15953 models. Not available with C*15543 or C*15553 models.	A[1]	A[1]	S	■[2]	--	--
L33		**Engine**, Vortec 5.3L V8 SFI, aluminum block with steel cylinder sleeves (310 hp [231.4 kW] @ 5200 rpm, 335 lb-ft of torque (452.3 N-m] @ 4000 rpm) 1 - Requires CK15753 models and included with (PDU) Light Duty Power Package.	A[1]	A[1]	--	A[1]	■[1]	■[1]
Z85		**Suspension Package**, Handling/Trailering, includes 36 mm piston monotube shocks 1 - Standard on C*15553 and C*15543 models.	A	A	S	A[1]	■[1]	■[1]
NP8		**Transfer case**, electronic Autotrac with push-button controls 1 - Requires 4WD Models. - Standard on 4WD Crew Cab Models only. Required when (A95) front reclining buckets seats are ordered on Fleet and Government order types. 2 - Requires 4x4 models. Standard on 4x4 Crew Cab models only.	--	--	--	A[1]	■[2]	■[2]

ADDITIONAL OPTIONS

Free Flow RPO Code	Ref. Only RPO Code	Description 1 - Equipment Groups 1WT and 1LS available on CC15*03, CK15*03, CC15753, CK15753, CC15953 and CK15953 Models. 2 - Equipment Group 2LS available on C*15543 Models. 3 - Equipment Groups 1LT available on all models. 4 - Equipment Groups 2LT and 3LT available on CC15*53, CK15*53, and C*15543 Models.	Reg. and Ext. Cab		Crew Cab	Reg., Ext. and Crew Cab	Ext. and Crew Cab	
			Work Truck 1WT[1]	LS 1LS[1]	LS 2LS[2]	LT1 1LT[3]	LT2 2LT[4]	LT3 3LT[4]
CJ3		**Air conditioning**, dual-zone manual climate control with individual climate settings for driver and right-front passenger 1 - Standard on Extended Cab models only.	A[1]	S	S	S	--	--
CJ2		**Air conditioning**, dual-zone automatic climate control with individual climate settings for driver and right-front passenger 1 - Not available with Regular models or (VYU) Snow Plow Prep Package.	--	--	--	A[1]	■	■
UB0		**Audio system**, AM/FM stereo with CD player, seek-and-scan, digital clock, auto-tone control, Radio Data System (RDS) and speed-compensated volume 1 - Upgradeable to (UC6) AM/FM stereo with 6-disc in-dash CD changer or (UB1) AM/FM stereo with CD and cassette player when (PDJ) Extended and Crew Cab South-West LT Package is ordered. Includes 4 speakers on Regular Cab and 6 speakers on Extended and Crew Cab models.	A	■	S	□[1]	□[1]	--
UB1		**Audio system**, AM/FM stereo with CD and cassette player, seek-and-scan, digital clock, auto-tone control, Radio Data System (RDS), speed-compensated volume, TheftLock and 4 speakers on Regular Cab and 6 speakers on Crew Cab models (with bucket seats includes a Bose speaker system, amplifier and subwoofer) 1 - Requires (PDJ) Extended and Crew Cab South-West LT Package.	--	--	--	A[1]	A[1]	--
UC6		**Audio system**, AM/FM stereo with 6-disc CD changer, seek-and-scan, digital clock, auto-tone control, Radio Data System (RDS), speed-compensated volume and TheftLock	--	--	--	A	A	■
K34		**Cruise control**, electronic with set and resume speed	A	■	S	■	■	■
C49		**Defogger**, rear-window electric 1 - Not available with (A28) sliding rear window or (C42) air conditioning delete. Available with Fleet and Government order types only. 2 - Not available with (A28) sliding rear window.	A[1]	■[2]	A[2]	■[2]	■[2]	■[2]
AU3		**Door locks**, power 1 - Available with Fleet and Government order types only.	A[1]	A	S	■	■	■
U42		**Entertainment system**, rear seat DVD player with LCD display and 2 sets of wireless headphones 1 - Requires Crew Cab models.	--	--	--	--	A[1]	A[1]

ADDITIONAL OPTIONS

Free Flow RPO Code	Ref. Only RPO Code	Description 1 - Equipment Groups 1WT and 1LS available on CC15*03, CK15*03, CC15753, CK15753, CC15953 and CK15953 Models. 2 - Equipment Group 2LS available on C*15543 Models. 3 - Equipment Groups 1LT available on all models. 4 - Equipment Groups 2LT and 3LT available on CC15*53, CK15*53, and C*15543 Models.	Reg. and Ext. Cab		Crew Cab	Reg., Ext. and Crew Cab	Ext. and Crew Cab	
			Work Truck 1WT[1]	LS 1LS[1]	LS 2LS[2]	LT1 1LT[3]	LT2 2LT[4]	LT3 3LT[4]
BG9		**Floor covering**, Black rubberized-vinyl 1 - Not available with C*15543 models. Not available with (922) Medium Gray leather seating surfaces.	S	S	--	A[1]	--	--
B30		**Floor covering**, color-keyed carpeting with rubberized vinyl floor mats (Extended and Crew Cab models also include rear floor mats) 1 - Available with Fleet and Government order types only. Not available with (**V) vinyl interior trim. 2 - Not available with (**V) vinyl interior trim. 3 - May be substituted with (BG9) rubberized vinyl floor covering on Regular and Extended Cab models. Not available with (**V) vinyl interior trim.	A[1]	A[2]	S	□[3]	■	■
UE1		**OnStar**, 1-year of Safe and Sound plan. Includes Automatic Notification of Air Bag Deployment, Stolen Vehicle Location Assistance, Emergency Services, Roadside Assistance, Remote Door Unlock, OnStar Vehicle Diagnostics, Hands-Free Calling, AccidentAssist and Remote Horn & Lights 1 - OnStar services require vehicle electrical system (including battery), wireless service and GPS satellite signals to be available and operating for features to function properly. OnStar acts as a link to existing emergency service providers. OnStar Vehicle Diagnostics available on most 2004 MY and newer GM vehicles. Diagnostic capability varies by model. Visit onstar.com for system limitations and details. Requires (UK3) steering-wheel mounted audio controls. Not available with a ship-to of Puerto Rico or the Virgin Islands.	--	--	--	A[1]	A[1]	A[1]
PDB		**OnStar Plus Package**, includes (U2K) XM Satellite Radio, (UE1) OnStar and (UK3) steering-wheel mounted audio controls 1 - Package does not include (U2K) XM Satellite Radio when ordered outside the 48 contiguous United States. Not available with a ship-to of Puerto Rico or the Virgin Islands.	--	--	--	A[1]	A[1]	A[1]
R6Q		**OnStar Plus Package discount not desired** 1 - Required when content within option package is ordered and entire package is not desired.	--	--	--	A[1]	A[1]	A[1]
A95		**Seats**, front bucket, includes (AG1) 6-way power driver seat adjuster, front passenger manual recline, adjustable outboard head restraints, inboard armrests and storage pockets 1 - Requires Extended or Crew Cab Models. - Requires Fleet and Government order types only. Includes (D07) floor console and (UQ7) Bose Premium speaker system. Also includes (UK6) rear audio controls on Crew Cab Models. On 4WD Models, also requires (NP8) electronic Autotrac transfer case.	--	--	--	A[1]	■	--

ADDITIONAL OPTIONS

Free Flow RPO Code	Ref. Only RPO Code	Description 1 - Equipment Groups 1WT and 1LS available on CC15*03, CK15*03, CC15753, CK15753, CC15953 and CK15953 Models. 2 - Equipment Group 2LS available on C*15543 Models. 3 - Equipment Groups 1LT available on all models. 4 - Equipment Groups 2LT and 3LT available on CC15*53, CK15*53, and C*15543 Models.	Reg. and Ext. Cab		Crew Cab	Reg., Ext. and Crew Cab	Ext. and Crew Cab	
			Work Truck 1WT[1]	LS 1LS[1]	LS 2LS[2]	LT1 1LT[3]	LT2 2LT[4]	LT3 3LT[4]
AG1		**Seat adjuster**, driver 6-way power 1 - Included with (**2) Seat trim, leather seating surfaces on Extended or Crew Cab Models. Included with (A95) front reclining bucket seats. 2 - With (AN3) front full-feature bucket seats, includes 10-way power seat adjusters.	--	--	--	A[1]	■	■[2]
DNH		**Regular production accessory**, Underseat storage, rear, lockable 1 - Requires Extended Cab models. Not available with C*15553 models. With CK15953 models not available with (BVS) Regular production accessory, chrome-plated, tubular, assist steps, (BVE) Regular production accessory, Black-coated, tubular assist steps, or (EN6) Regular production accessory, hard, Black tonneau cover. For additional GM Accessory Offerings and Installation, please contact your local GM Accessory Distributor Installer (ADI).	A/D[1]	A/D[1]	--	A/D[1]	A/D[1]	A/D[1]
UK3		**Steering wheel controls**, mounted audio and Driver Information Center controls which provides access to enhanced Driver Information Center features and information	--	--	--	A	■	■
CF5		**Sunroof**, power, tilt-sliding with express-open and wind deflector, includes (UG1) Universal Home Remote	--	--	--	--	A	A
A28		**Window**, manual rear-sliding, deep-tinted 1 - Requires (AJ1) Solar-Ray deep-tinted glass. Deletes or not available with (C49) rear-window defogger when ordered.	A[1]	A[1]	A[1]	A[1]	A[1]	A[1]
U2K		**XM Satellite Radio**. With a wide variety of programming, XM has something to excite any driver. Whether you want to be entertained or informed, to laugh, think, or sing, XM has the perfect channel for you - coast-to-coast, and in digital-quality sound. 3 trial months - no obligation 1 - Available in the 48 contiguous United States. Required $12.95 monthly subscription sold separately. All fees and programming subject to change. Subscription subject to customer agreement. For more information, visit gm.xmradio.com.	--	--	--	A[1]	A[1]	A[1]
PDG		**Texas/Oklahoma/Louisiana LS Package**, includes (AJ1) Solar-Ray deep-tinted glass, (K47) high-capacity air cleaner, (AU3) power programmable door locks and (LU3) Vortec 4.3L V6 MFI engine 1 - Requires C*15703 or C*15903 models. Requires delivery to residents of TX/OK/LA and select counties in New Mexico, Arkansas and Kansas. Requires and only available with (LU3) Vortec 4.3L V6 MFI engine. Not available with Fleet or Government order types.	--	A[1]	--	--	--	--

ADDITIONAL OPTIONS

Free Flow RPO Code	Ref. Only RPO Code	Description 1 - Equipment Groups 1WT and 1LS available on CC15*03, CK15*03, CC15753, CK15753, CC15953 and CK15953 Models. 2 - Equipment Group 2LS available on C*15543 Models. 3 - Equipment Groups 1LT available on all models. 4 - Equipment Groups 2LT and 3LT available on CC15*53, CK15*53, and C*15543 Models.	Reg. and Ext. Cab		Crew Cab	Reg., Ext. and Crew Cab	Ext. and Crew Cab	
			Work Truck 1WT[1]	LS 1LS[1]	LS 2LS[2]	LT1 1LT[3]	LT2 2LT[4]	LT3 3LT[4]
PDJ		**South-West LT Extended and Crew Cab Package**, includes (K47) high-capacity air cleaner, (T96) fog lamps, (**D) Custom Cloth seat trim and (UB1) AM/FM stereo with CD and cassette player (upgradeable to (UC6) AM/FM stereo with 6-disc in-dash CD changer) 1 - Requires CC15753, CC15553 or CC15543 models. Not available with (**2) leather seating surfaces. Not available with Fleet or Government order types. Requires delivery to residents in TX/OK/LA/CA/FL/NM/NV/AZ and select counties in Mississippi, Alabama, Georgia, Arkansas and Kansas. Delivery outside of these parameters will result in a charge back to the ORIGINAL invoicing dealer.	--	--	--	A[1]	A[1]	--
R7C		**Residency based package override**	--	A	--	A	A	--
R6X		**Texas/Oklahoma/Louisiana Package discounts (PDG) or (PDJ) not desired**	--	A	--	A	A	--
B2E		**Silverado Limited Edition**, includes (PDU) Light Duty Performance Package, (GT4) 3.73 rear axle ratio, (UK3) steering-wheel mounted audio controls, (QR9) 4 - 20" x 8.5" 5-spoke chromed cast aluminum wheels, (QSS) P275/55R20 touring blackwall tires, (ZAN) P265/70R17 blackwall spare tire and 17" steel spare wheel 1 - Requires C*15553, C*15753 or C*15543 models. Option content within this package may not be substituted or deleted. Not available with (Z85) Handling/Trailering Suspension Package, (ZY2) two-tone paint, (NW7) traction assist system, (VYU) Snow Plow Prep Package, (NHT) Vortec Max Performance Pack, (B4V) Silverado Performance Edition or any (SEO) Special Equipment Options. 4WD (B2E) Silverado Limited Edition models build with code Z71 however Z71 used with B2E will NOT include: (B71) Wheel flares, (NZZ) Skid Plate Package, 1.81" Front shocks, 1.81" Rear shocks or Z71 Decals on Pickup Box.	--	--	--	A[1]	A[1]	A[1]
PDX		NEW! **Extended Cab Value Package**, includes (LM7) Vortec 5.3L V8 SFI engine, (L33) Vortec 5.3L V8 SFI aluminum block engine or (L59) Vortec 5.3L V8 SFI FlexFuel engine, (G80) heavy-duty automatic locking rear differential, (Z82) heavy-duty trailering equipment, (P25) 4 - 17" x 7.5" (43.2 cm x 19.1 cm) 6-lug polished cast aluminum wheels and (BVE) chrome plated tubular assist steps 1 - Requires C*15753 Models. Not available with (NHT) Vortec Max Performance Pack, (PDU) Light Duty Power Package, (B2E) Silverado Limited Edition, or (B4V) Silverado Performance Edition.	--	--	--	A[1]	--	--

ADDITIONAL OPTIONS

Free Flow RPO Code	Ref. Only RPO Code	Description 1 - Equipment Groups 1WT and 1LS available on CC15*03, CK15*03, CC15753, CK15753, CC15953 and CK15953 Models. 2 - Equipment Group 2LS available on C*15543 Models. 3 - Equipment Groups 1LT available on all models. 4 - Equipment Groups 2LT and 3LT available on CC15*53, CK15*53, and C*15543 Models.	Reg. and Ext. Cab		Crew Cab	Reg., Ext. and Crew Cab	Ext. and Crew Cab	
			Work Truck 1WT[1]	LS 1LS[1]	LS 2LS[2]	LT1 1LT[3]	LT2 2LT[4]	LT3 3LT[4]
PDZ		NEW! **Crew Cab Value Package**, includes (L59) Vortec 5.3L V8 SFI FlexFuel engine, (G80) heavy-duty automatic locking rear differential, (Z82) heavy-duty trailering equipment, (P25) 4 - 17" x 7.5" (43.2 cm x 19.1 cm) 6-lug polished cast aluminum wheels and (PPB) aluminum pickup bed extender 1 - Requires Crew Cab Models. Not available with (NHT) Vortec Max Performance Pack, (PDU) Light Duty Power Package, (B2E) Silverado Limited Edition, or (B4V) Silverado Performance Edition.	--	--	--	A[1]	--	--
R6S		**Value Package discount not desired** 1 - Requires C*15753 or C*15543 Models. On C*15753 Models, all (PDU) Light Duty Power Package orders without (P25) 6-lug polished cast aluminum wheels or (BVE) Regular production accessory, Assist steps, chrome plated tubular must order (PDX) Extended Cab Value Package or (R6S) Value Package Discount not desired. On C*15543 Models, all (PDU) Light Duty Power Package orders without (P25) 6-lug polished cast aluminum wheels or (PPB) aluminum pickup bed extender must order (PDZ) Crew Cab Value Package or (R6S) Value Package Discount not desired.	--	--	--	A[1]	--	--
VB3		**Bumper**, rear chrome, step-style with pad	A	■	S	■	■	■
VF7		**Bumper**, rear delete 1 - Requires a Fleet order type only.	A[1]	--	--	--	--	--
CWB		**Chrome Exterior Package**, includes chrome door handles and chrome-capped exterior mirrors 1 - Requires (DL8) outside power-adjustable mirrors. Not available with (15U) Sandstone Metallic, (50U) Summit White or (59U) Silver Birch Metallic.	--	--	A[1]	A[1]	A[1]	--
T96		**Fog lamps**, front, halogen	--	--	--	A	■	■
AJ1		**Glass**, Solar-Ray deep-tinted (all windows except light-tinted glass on windshield and driver- and front passenger-side glass) 1 - With Extended Cab models, includes rear window and rear quarter windows. With Crew Cab models or (C49) rear-window defogger, includes light-tinted rear window.	A[1]	A[1]	A[1]	■[1]	■[1]	■[1]
VNX		**Grille**, delete	A	A	A	A	A	A
DF2		**Mirrors**, outside high-visibility camper-style, Black, manual-folding and extension, includes a dual-segment mirror on the driver-side that provides enhanced wide angle capacity (not recommended for bodies or trailers wider than 86" [218.4 cm])	A	A	--	--	--	--

ADDITIONAL OPTIONS

Free Flow RPO Code	Ref. Only RPO Code	Description 1 - Equipment Groups 1WT and 1LS available on CC15*03, CK15*03, CC15753, CK15753, CC15953 and CK15953 Models. 2 - Equipment Group 2LS available on C*15543 Models. 3 - Equipment Groups 1LT available on all models. 4 - Equipment Groups 2LT and 3LT available on CC15*53, CK15*53, and C*15543 Models.	Reg. and Ext. Cab		Crew Cab	Reg., Ext. and Crew Cab	Ext. and Crew Cab	
			Work Truck 1WT[1]	LS 1LS[1]	LS 2LS[2]	LT1 1LT[3]	LT2 2LT[4]	LT3 3LT[4]
DL3		**Mirrors**, outside heated power-adjustable, power-folding and driver-side auto-dimming, Black with integrated turn signal indicators 1 - Curb-tilt feature requires (UK3) steering-wheel mounted audio controls. 2 - Upgradeable to (DPN) outside vertical camper mirrors. Includes curb-tilt when (UK3) steering-wheel mounted audio controls is ordered.	--	--	--	A[1]	A[1]	□[2]
DPN		**Mirrors**, outside heated power-adjustable vertical camper manual-folding and extension, integrated turn signal indicators and lower convex spotter glass (convex glass is not heated)	--	--	--	A	A	A
B85		**Moldings**, bodyside 1 - Moldings are Black. 2 - Moldings are body-colored with chrome insert, see Color and Trim chart for compatibility.	--	A[1]	S[2]	■[2]	■[2]	■[2]
ZY2		**Paint**, two-tone 1 - Requires C*15753 or C*15553 models.	--	--	--	A[1]	A[1]	A[1]
BVE		**Regular production accessory**, Assist steps, chrome plated tubular, stainless steel 1 - For additional GM Accessory Offerings and Installation, please contact your local GM Accessory Distributor Installer (ADI).	A/D[1]	A/D[1]	A/D[1]	A/D[1]	A/D[1]	A/D[1]
BVS		**Regular production accessory**, Assist steps, Black coated tubular, stainless steel 1 - For additional GM Accessory Offerings and Installation, please contact your local GM Accessory Distributor Installer (ADI).	A/D[1]	A/D[1]	A/D[1]	A/D[1]	A/D[1]	A/D[1]
BVU		**Regular production accessory**, Assist steps, molded plastic, Black 1 - Requires Crew Cab models. For additional GM Accessory Offerings and Installation, please contact your local GM Accessory Distributor Installer (ADI).	--	--	A/D[1]	A/D[1]	A/D[1]	A/D[1]
PPB		**Regular production accessory**, Pickup bed extender, brushed aluminum 1 - For additional GM Accessory Offerings and Installation, please contact your local GM Accessory Distributor Installer (ADI).	A/D[1]	A/D[1]	A/D[1]	A/D[1]	A/D[1]	A/D[1]

ADDITIONAL OPTIONS

Free Flow RPO Code	Ref. Only RPO Code	Description 1 - Equipment Groups 1WT and 1LS available on CC15*03, CK15*03, CC15753, CK15753, CC15953 and CK15953 Models. 2 - Equipment Group 2LS available on C*15543 Models. 3 - Equipment Groups 1LT available on all models. 4 - Equipment Groups 2LT and 3LT available on CC15*53, CK15*53, and C*15543 Models.	Reg. and Ext. Cab		Crew Cab	Reg., Ext. and Crew Cab	Ext. and Crew Cab	
			Work Truck 1WT[1]	LS 1LS[1]	LS 2LS[2]	LT1 1LT[3]	LT2 2LT[4]	LT3 3LT[4]
PUB		**Regular production accessory**, Pickup bed protectors, Top side rails, Black molded 1 - Not available with C*15543 or C*15553 models, (E95) Regular production accessory, soft, Black tonneau cover, or (EN6) Regular production accessory, hard, Black tonneau cover. For additional GM Accessory Offerings and Installation, please contact your local GM Accessory Distributor Installer (ADI).	A/D[1]	A/D[1]	--	A/D[1]	A/D[1]	A/D[1]
E95		**Regular production accessory**, Tonneau cover, Black, soft 1 - Not available with (PUB) Regular production accessory, top side rail, Black-molded pickup bed protectors. For additional GM Accessory Offerings and Installation, please contact your local GM Accessory Distributor Installer (ADI).	A/D[1]	A/D[1]	A/D[1]	A/D[1]	A/D[1]	A/D[1]
EN6		**Regular production accessory**, Tonneau cover, Black, hard, folding, lockable 1 - Not available with (PUB) Regular production accessory, top side rail, Black-molded pickup bed protectors. When ordered on CK15953 models, not available with (DNH) Regular production accessory, rear underseat storage, (BVE) Regular production accessory, chrome-plated, tubular assist steps, or (BVS) Regular production accessory, Black-coated, tubular assist steps. For additional GM Accessory Offerings and Installation, please contact your local GM Accessory Distributor Installer (ADI).	A/D[1]	A/D[1]	A/D[1]	A/D[1]	A/D[1]	A/D[1]
SAF		**Spare tire lock**, keyed cylinder lock that utilizes same key as ignition and door	A	A	A	A	A	A
QPO		**Tires**, P245/70R17 all-season, White outlined-letter 1 - Requires 2WD models.	A[1]	A[1]	--	A[1]	A[1]	A[1]
QVM		**Tires**, P265/70R17 all-season, White outlined-letter, includes a blackwall spare tire 1 - Requires 4x4 Regular and Extended Cab models. 2 - Requires 4x4 Extended Cab models.	A[1]	A[1]	--	A[1]	A[2]	A[2]
QJP		**Tires**, P265/70R17 on-/off-road, blackwall, includes an on-/off-road blackwall spare 1 - Requires CK15953 models and (Z85) Handling/Trailering Suspension Package and Fleet or Government order types. 2 - Requires 4x4 models. 3 - Requires 4x4 models. With CK15*03 and CK15*53 models requires (Z71) Off-Road Suspension Package. With CK15953 models and Fleet or Government order types or CK15543 models requires (Z71) Off-Road Suspension Package or (Z85) Handling/Trailering Suspension Package. Also available with 2WD and 4x4 (NHT) Vortec Max Performance Pack. Not available with (B2E) Silverado Limited Edition or (B4V) Silverado Performance Edition.	A[1]	A[1]	S[2]	A[3]	A[3]	A[3]

ADDITIONAL OPTIONS

Free Flow RPO Code	Ref. Only RPO Code	Description 1 - Equipment Groups 1WT and 1LS available on CC15*03, CK15*03, CC15753, CK15753, CC15953 and CK15953 Models. 2 - Equipment Group 2LS available on C*15543 Models. 3 - Equipment Groups 1LT available on all models. 4 - Equipment Groups 2LT and 3LT available on CC15*53, CK15*53, and C*15543 Models.	Reg. and Ext. Cab		Crew Cab	Reg., Ext. and Crew Cab	Ext. and Crew Cab	
			Work Truck 1WT[1]	LS 1LS[1]	LS 2LS[2]	LT1 1LT[3]	LT2 2LT[4]	LT3 3LT[4]
QJM		**Tires**, P265/70R17 on-/off-road, White outlined-letter, includes a on-/off-road blackwall spare 1 - Requires CK15953 models and (Z85) Handling/Trailering Suspension Package and Fleet or Government order types. 2 - Requires 4x4 models. With CK15*03 and CK15*53 models requires (Z71) Off-Road Suspension Package. With CK15953 models and Fleet or Government order types or CK15543 requires (Z71) Off-Road Suspension Package or (Z85) Handling/Trailering Suspension Package. Also available with 2WD and 4x4 (NHT) Vortec Max Performance Pack. Not available with (B2E) Silverado Limited Edition or (B4V) Silverado Performance Edition.	A[1]	A[1]	--	A[2]	A[2]	A[2]
QXR		**Tires**, LT245/70R17 all-terrain, blackwall, 6-ply load range C 1 - Requires 4x4 models. Requires (Z85) Handling/Trailering Suspension Package. Not available with CK15953 models. 2 - Requires 4WD Models. Requires (Z85) Handling/Trailering Suspension Package, . Not available with CK15953 Models, (Z71) Off-Road Suspension Package, or (NHT) VortecMax Performance Pack. Fleet and Government Orders are allowed with (Z71) Off-Road Suspension Package on CK15*03 and CK15753 Models.	A[1]	A[1]	--	A[2]	A[2]	A[2]
P25		**Wheels**, 4 - 17" x 7.5" (43.2 cm x 19.1 cm) 6-lug polished cast aluminum, includes steel spare	--	--	--	A	A	■
BTN		**2LS Crew Sport Package**, includes (QR9) 4 - 20" x 8.5" (50.8 cm x 21.6 cm) cast aluminum chromed 5-spoke wheels, (QSS) P275/55R20, touring, blackwall tires, and (ZAN) spare P265/70R17, blackwall tire	--	--	A	--	--	--
R7D		**Wheel flares not desired** 1 - Requires (Z71) Suspension Package, Off-Road and (25U) Dark Blue Metallic, (41U) Black, (46U) Blue Granite Metallic, (63U) Sport Red Metallic, (74U) Victory Red or any SEO paints.	--	--	--	A[1]	A[1]	A[1]
K47		**Air cleaner**, high-capacity 1 - Included with (Z82) heavy-duty trailering equipment or (VYU) Snow Plow Prep Package.	A[1]	A[1]	A[1]	A[1]	A[1]	A[1]
KNP		**Cooling**, auxiliary external transmission oil cooler, heavy-duty air-to-oil 1 - Requires (M30) 4-speed automatic transmission. Included with (Z82) heavy-duty, trailering equipment or (VYU) Snow Plow Prep Package.	A[1]	A[1]	A[1]	A[1]	A[1]	A[1]
G80		**Differential**, heavy-duty automatic locking rear	A	A	A	A	A	A
YF5		**Emissions**, California state requirements	A	A	A	A	A	A
FE9		**Emissions**, Federal requirements	A	A	A	A	A	A

ADDITIONAL OPTIONS

Free Flow RPO Code	Ref. Only RPO Code	Description 1 - Equipment Groups 1WT and 1LS available on CC15*03, CK15*03, CC15753, CK15753, CC15953 and CK15953 Models. 2 - Equipment Group 2LS available on C*15543 Models. 3 - Equipment Groups 1LT available on all models. 4 - Equipment Groups 2LT and 3LT available on CC15*53, CK15*53, and C*15543 Models.	Reg. and Ext. Cab		Crew Cab	Reg., Ext. and Crew Cab	Ext. and Crew Cab	
			Work Truck 1WT[1]	LS 1LS[1]	LS 2LS[2]	LT1 1LT[3]	LT2 2LT[4]	LT3 3LT[4]
NE1		**Emissions**, Maine, Massachusetts, New York or Vermont state requirements	A	A	A	A	A	A
NB8		**Emissions override**, California, Massachusetts or New York (for vehicles ordered by dealers in states of California, Massachusetts or New York with Federal emissions) 1 - Requires (FE9) Federal emissions requirements.	A[1]	A[1]	A[1]	A[1]	A[1]	A[1]
NC7		**Emissions override**, Federal (for vehicles ordered by dealers in Federal emission states with California, New York, Vermont, Massachusetts or Maine emissions; may also be used by dealers in states of California, New York, Vermont, Massachusetts or Maine to order different state-specific emissions) 1 - Requires (YF5) California state emissions requirements or (NE1) New York, Vermont, Massachusetts or Maine state emissions requirements.	A[1]	A[1]	A[1]	A[1]	A[1]	A[1]
K05		**Engine block heater**	A	A	A	A	A	A
LU3		**Engine**, Vortec 4.3L V6 MFI (195 hp [145.4 kW] @ 4600 rpm, 260 lb-ft of torque [351.0 N-m] @ 2800 rpm) 1 - Required and standard on C*15703, C*15903 and CC15753 models only. Not available with (VYU) Snow Plow Prep Package or (Z82) heavy-duty, trailering equipment. 2 - Requires CC15753. With CC15753, only available with (PDJ) South-West LT Extended Cab Package or Fleet or Government order types.	A[1]	A[1]	--	A[2]	--	--
LR4		**Engine**, Vortec 4.8L V8 SFI (285 hp [212.3 kW] @ 5200 rpm, 295 lb-ft of torque [398.2 N-m] @ 4000 rpm) 1 - Standard on CK15753 models only. 2 - Not standard on C*15953 models. Not available with C*15543 or C*15553 models.	A[1]	A[1]	S	■[2]	--	--
LM7		**Engine**, Vortec 5.3L V8 SFI (295 hp [219.7 kW] @ 5200 rpm, 335 lb-ft of torque [452.3 N-m] @ 4000 rpm) 1 - Requires C*15703, C*159*3 or CC15753 Models and SEO (8B0) Batteries, 770 CCA with a 600 CCA auxiliary or SEO (8S3) Backup alarm. 2 - Not available with CK15753 Models. On C*15703, C*159*3 and CC15753 Models, requires (NW7) Traction assist system, electronic, SEO (8B0) Batteries, 770 CCA with a 600 CCA auxiliary or SEO (8S3) Backup alarm. 3 - Standard on C*15553 Models. Not available on CK15753 or C*15543 Models. On C*15703, C*159*3 and CC15753 Models, requires (ZX3) Suspension package, Ride-Control, (NW7) Traction assist system, electronic, SEO (8B0) Batteries, 770 CCA with a 600 CCA auxiliary or SEO (8S3) Backup alarm.	A[1]	A[2]	--	A[3]	A[3]	A[3]

ADDITIONAL OPTIONS

Free Flow RPO Code	Ref. Only RPO Code	Description 1 - Equipment Groups 1WT and 1LS available on CC15*03, CK15*03, CC15753, CK15753, CC15953 and CK15953 Models. 2 - Equipment Group 2LS available on C*15543 Models. 3 - Equipment Groups 1LT available on all models. 4 - Equipment Groups 2LT and 3LT available on CC15*53, CK15*53, and C*15543 Models.	Reg. and Ext. Cab		Crew Cab	Reg., Ext. and Crew Cab	Ext. and Crew Cab	
			Work Truck 1WT[1]	LS 1LS[1]	LS 2LS[2]	LT1 1LT[3]	LT2 2LT[4]	LT3 3LT[4]
L33		**Engine**, Vortec 5.3L V8 SFI, aluminum block with steel cylinder sleeves (310 hp [231.4 kW] @ 5200 rpm, 335 lb-ft of torque (452.3 N-m] @ 4000 rpm) 1 - Requires CK15753 models and included with (PDU) Light Duty Power Package.	A[1]	A[1]	--	A[1]	■[1]	■[1]
L59		**Engine**, Vortec 5.3L V8 SFI FlexFuel (295 hp [219.7 kW] @ 5200 rpm, 335 lb-ft of torque [452.3 N-m] @ 4000 rpm) 1 - Requires C*15*03, C*15543, C*15753 or C*15953 Models. - Standard on C*15953 and C*15543 Models. 2 - Requires C*15543, C*15753 or C*15953 Models. - Standard on CC15753, C*15543 and C*15953 Models.	A[1]	A[1]	--	A[1]	A[2]	A[2]
PDU		**Light Duty Power Package**, includes (LM7) Vortec 5.3L V8 SFI engine, (L33) Vortec 5.3L V8 SFI engine or (L59) Vortec 5.3L V8 SFI FlexFuel engine, (G80) heavy-duty automatic locking differential and (Z82) heavy-duty trailering equipment 1 - Requires C*15*53 Extended Cab models. Not available with (Z83) Solid Smooth Ride Suspension Package. 2 - Not available with (Z83) Solid Smooth Ride Suspension Package. 3 - Not available with (Z83) Solid Smooth Ride Suspension Package. On C*15753 and C*15543 Models, requires (B2E) Silverado Limited Edition.	A[1]	A[2]	--	A[3]	A	A
R6Y		**Light Duty Power Package discount not desired** 1 - Not available with (B2E) Silverado Limited Edition.	A	A	--	A[1]	A[1]	A[1]

ADDITIONAL OPTIONS

Free Flow RPO Code	Ref. Only RPO Code	Description 1 - Equipment Groups 1WT and 1LS available on CC15*03, CK15*03, CC15753, CK15753, CC15953 and CK15953 Models. 2 - Equipment Group 2LS available on C*15543 Models. 3 - Equipment Groups 1LT available on all models. 4 - Equipment Groups 2LT and 3LT available on CC15*53, CK15*53, and C*15543 Models.	Reg. and Ext. Cab		Crew Cab	Reg., Ext. and Crew Cab	Ext. and Crew Cab	
			Work Truck 1WT[1]	LS 1LS[1]	LS 2LS[2]	LT1 1LT[3]	LT2 2LT[4]	LT3 3LT[4]
NHT		**Vortec Max Performance Pack**, includes (LQ9) Vortec high-output 6.0L V8 engine with "Vortec Max" engine cover and door badge that reads "Vortec Max", (M70) 4-speed automatic super-duty transmission, (GT5) 4.10 rear axle ratio (includes (GT4) 3.73 rear axle ratio on CC15543 models), (G80) heavy-duty rear locking differential, (ZX3) Ride-Control Suspension Package, (KC4) external engine oil cooler, (KNP) auxiliary external transmission oil cooler and (Z82) heavy-duty trailering equipment **1 - Requires C*15753 or C*15543 models. Also, includes (NP8) electronic Autotrac transfer case on CK15753 and CK15543 models. Requires (P25) 4 - 17" x 7.5" (43.2 cm x 19.1 cm) 6-lug polished cast aluminum wheels, (QJM) P265/70R17 on-/off-road White outlined-letter tires or (QJP) P265/70R17 on-/off-road blackwall tires. Option content within this package may not be substituted or deleted. - Not available with (ZY2) two-tone paint, (NW7) electronic traction assist system, (Z71) Off-Road Suspension Package, (Z83) Solid Smooth Ride Suspension package, (Z85) Handling/Trailering Suspension Package or any (SEO) Special Equipment Options.**	--	--	--	A[1]	A[1]	A[1]
GU5		**Rear axle**, 3.23 ratio **1 - Refer to Engine/Axle chart for availability. Standard on 2WD models only.**	A[1]	A[1]	A[1]	A[1]	A[1]	A[1]
GU6		**Rear axle**, 3.42 ratio **1 - Refer to Engine/Axle chart for availability. Standard on 4x4 models only.**	A[1]	A[1]	--	A[1]	A[1]	A[1]
GT4		**Rear axle**, 3.73 ratio **1 - Refer to Engine/Axle chart for availability. Requires Fleet and Government order types on 4x4 Regular and Extended Cab models unless (B2E) Silverado Special Edition is ordered.** **2 - Requires 4x4 models.**	A[1]	A[1]	A[2]	A[1]	A[1]	A[1]
GT5		**Rear axle**, 4.10 ratio **1 - Requires 4x4 models and (G80) heavy-duty automatic locking rear differential. Refer to Engine/Axle chart for availability.**	A[1]	A[1]	--	A[1]	A[1]	A[1]

ADDITIONAL OPTIONS

Free Flow RPO Code	Ref. Only RPO Code	Description 1 - Equipment Groups 1WT and 1LS available on CC15*03, CK15*03, CC15753, CK15753, CC15953 and CK15953 Models. 2 - Equipment Group 2LS available on C*15543 Models. 3 - Equipment Groups 1LT available on all models. 4 - Equipment Groups 2LT and 3LT available on CC15*53, CK15*53, and C*15543 Models.	Reg. and Ext. Cab		Crew Cab	Reg., Ext. and Crew Cab	Ext. and Crew Cab	
			Work Truck 1WT[1]	LS 1LS[1]	LS 2LS[2]	LT1 1LT[3]	LT2 2LT[4]	LT3 3LT[4]
B4V		**Silverado Performance Edition**, includes (LQ9) Vortec high-output 6.0L V8 engine with "Vortec Max" engine cover and door badge that reads "Vortec Max", (M32) 4-speed automatic heavy-duty transmission, (GT4) 3.73 rear axle ratio, High-Performance Suspension Package, (G80) heavy-duty, locking rear differential, (NW7) traction assist system, (KC4) engine oil cooler, (KNP) external transmission oil cooler, (Z82) heavy-duty trailering equipment, (UK3) steering-wheel mounted audio controls, (QR9) 4 - 20" x 8.5" 5-spoke chromed cast aluminum wheels, (QSS) P275/55R20 touring blackwall tires, (ZAN) P265/70R17 blackwall spare tire and 17" steel spare wheel **1 - Requires CC15753 models. Option content within this package may not be substituted or deleted. Not available with (Z85) Handling/Trailering Suspension Package, (ZY2) two-tone paint, (DPN) outside, heated, power-adjustable mirrors, (B2E) Silverado Limited Edition or any (SEO) Special Equipment Options.**	--	--	--	A[1]	A[1]	A[1]
NZZ		**Skid Plate Package**, includes aluminum front underbody shield starting behind front bumper and running to first cross-member, protecting front underbody, oil pan, differential case and transfer case, frame-mounted shields **1 - Requires 4x4 models. Included with (Z71) Off-Road Suspension Package or (VYU) Snow Plow Prep Package. Not included with (Z71) Off-Road Suspension Package if (B2E) Sierra Special Edition is ordered.** **2 - Requires 4x4 models.**	A[1]	A[1]	A[2]	A[1]	A[1]	A[1]
VYU		**Snow Plow Prep Package**, includes 10-amp power for backup and roof emergency light, (KW1) 160-amp alternator, high-flow front bumper, roof beacon lamp provisions with switch on the instrument panel, forward lamp wiring harness, 1.65" (42 mm) access hole with grommet in front of dash panel, instrument panel jumper wiring harness for electric trailer brake controller, (K47) high-capacity air cleaner and (NZZ) Skid Plate Package **1 - Requires CK15*03 models. Not available with (ZX3) Ride-Control Suspension Package, (LU3) Vortec 4.3L V6 MFI engine, (LM7) Vortec 5.3L V8 SFI engine or (CJ2) dual-zone, automatic air conditioning. Also includes (KNP) auxiliary external transmission oil cooler when (M30) 4-speed automatic transmission is ordered.**	A[1]	A[1]	--	A[1]	--	--

ADDITIONAL OPTIONS									
Free Flow RPO Code	Ref. Only RPO Code	Description 1 - Equipment Groups 1WT and 1LS available on CC15*03, CK15*03, CC15753, CK15753, CC15953 and CK15953 Models. 2 - Equipment Group 2LS available on C*15543 Models. 3 - Equipment Groups 1LT available on all models. 4 - Equipment Groups 2LT and 3LT available on CC15*53, CK15*53, and C*15543 Models.	Reg. and Ext. Cab		Crew Cab	Reg., Ext. and Crew Cab	Ext. and Crew Cab	
			Work Truck 1WT[1]	LS 1LS[1]	LS 2LS[2]	LT1 1LT[3]	LT2 2LT[4]	LT3 3LT[4]
Z85		**Suspension Package**, Handling/Trailering, includes 36 mm piston monotube shocks 1 - Standard on C*15553 and C*15543 models.	A	A	S	A[1]	■[1]	■[1]
Z71		**Suspension Package**, Off-Road, includes 1.81" (46 mm) shocks, off-road jounce bumpers, stabilizer bars, (B71) wheel flares, (NZZ) Skid Plate Package and Z71 decals on rear quarters 1 - Requires 4x4 models. Requires (PDX) Extended Cab Value Package, (PDZ) Crew Cab Value Package or (PDU) Light Duty Power Package and (QJM) P265/70R17 on-/off-road White outlined-letter tires or (QJP) P265/70R17 on-/off-road blackwall tires. Also available with (QXR) Tires, LT245/70R17 all-terrain, blackwall on Fleet and Government Orders on CK15*03 and CK15753 Models. If (B2E) Silverado Limited Edition is ordered with (Z71), 4WD (B2E) Silverado Limited Edition models build with code Z71 however Z71 used with B2E will NOT include: (B71) Wheel flares, (NZZ) Skid Plate Package, 1.81" Front shocks, 1.81" Rear shocks or Z71 Decals on Pickup Box.	--	--	--	A[1]	A[1]	A[1]
ZX3		**Suspension Package**, Ride-Control, manual-selectable, includes 2-position electronic control for shock setting and smooth-road/trailering 1 - Not available with (VYU) Snow Plow Prep Package or C*15553 Models or C*15543 Model unless (NHT) VortecMax Performance Pack is ordered. On C*15703, C*15903 and CC15753 Models not available with (L59) Vortec 5.3L V8 SFI FlexFuel engine, please select (LM7) Vortec 5.3L V8 SFI Engine if a 5.3L V8 is desired with this option.	--	--	--	A[1]	A[1]	A[1]
NW7		**Traction assist system**, electronic 1 - Requires 2WD models, (G80) heavy-duty automatic locking rear differential and (M30) 4-speed automatic transmission. Not available with (LU3) Vortec 4.3L V6 MFI engine or (L59) Vortec 5.3L V8 SFI, Flexible Fuel engine. 2 - Requires 2WD models and (G80) heavy-duty automatic locking rear differential. Not available with (LU3) Vortec 4.3L V6 MFI engine or (L59) Vortec 5.3L V8 SFI, Flexible Fuel engine. 3 - Requires 2WD Models and (G80) heavy-duty automatic rear locking differential. - Not available with (B2E) Silverado Limited Edition, (NHT) VortecMax Performance Pack, (LU3) Vortec 4.3L V6 MFI engine. Not available with (L59) Vortec 5.3L V8 SFI Flexible Fuel engine, please select (LM7) Vortec 5.3L engine if a 5.3L V8 is desired with this option except on CC15543 Models. CC15543 Models require (L59) Vortec 5.3L V8 SFI Flexible Fuel engine.	--	A[1]	A[2]	A[3]	A[3]	A[3]

ADDITIONAL OPTIONS									
Free Flow RPO Code	Ref. Only RPO Code	Description 1 - Equipment Groups 1WT and 1LS available on CC15*03, CK15*03, CC15753, CK15753, CC15953 and CK15953 Models. 2 - Equipment Group 2LS available on C*15543 Models. 3 - Equipment Groups 1LT available on all models. 4 - Equipment Groups 2LT and 3LT available on CC15*53, CK15*53, and C*15543 Models.	Reg. and Ext. Cab		Crew Cab	Reg., Ext. and Crew Cab	Ext. and Crew Cab	
			Work Truck 1WT[1]	LS 1LS[1]	LS 2LS[2]	LT1 1LT[3]	LT2 2LT[4]	LT3 3LT[4]
Z82		**Trailering equipment**, heavy-duty, includes trailering hitch platform, 7-wire harness (harness includes wires for: park lamps, backup lamps, right turn, left turn, electric brake lead, battery and ground) with independent fused trailering circuits mated to a 7-way sealed connector, instrument panel jumper wiring harness for electric trailer brake controller, and 1-way sealed connector for center high-mounted stop/brake lamp, (K47) high-capacity air cleaner and (KNP) external transmission oil cooler 1 - Requires (M30) 4-speed automatic transmission or (M70) super-duty, 4-speed automatic transmission. Not available with (LU3) Vortec 4.3L V6 MFI engine or (Z83) Solid Smooth Ride Suspension Package.	A[1]	A[1]	A	A[1]	A[1]	A[1]
UY2		**Trailering wiring provisions**, for camper, fifth wheel and gooseneck trailer, includes additional 8-way wiring harness routed to front of pickup box and added 7-way sealed connector for the trailer harness 1 - Requires (Z82) heavy-duty, trailering equipment. Not available with C*15543 or C*15553 models.	A[1]	A[1]	--	A[1]	A[1]	A[1]
NP8		**Transfer case**, electronic Autotrac with push-button controls 1 - Requires 4WD Models. - Standard on 4WD Crew Cab Models only. Required when (A95) front reclining buckets seats are ordered on Fleet and Government order types. 2 - Requires 4x4 models. Standard on 4x4 Crew Cab models only.	--	--	--	A[1]	■[2]	■[2]
M30		**Transmission**, 4-speed automatic, electronically controlled with overdrive and tow/haul mode 1 - Standard on Extended Cab models only.	A[1]	A[1]	S	S	S	S

2007 Chevrolet Truck Silverado 1500 PEG STAIRSTEP
Classic

S = Standard Equipment A = Available – (dashes) = Not Available D = ADI Available
■ = Included in Equipment Group □ = Included in Equipment Group but upgradeable

No deletions allowed to Equipment Groups. Additional options may be added; check ordering information section for compatibility.

*Indicates availability of feature on multiple models. For example, it indicates feature availability on 2WD and 4WD Models or Rear wheel drive and All-wheel drive Models.

Codes listed in the shaded column titled Ref. Only RPO Code are for internal use only and should not be ordered.

Free Flow RPO Code	Ref. Only RPO Code	Description 1 - Equipment Groups 1WT and 1LS available on CC15*03, CK15*03, CC15753, CK15753, CC15953 and CK15953 Models. 2 - Equipment Group 2LS available on C*15543 Models. 3 - Equipment Groups 1LT available on all models. 4 - Equipment Groups 2LT and 3LT available on CC15*53, CK15*53, and C*15543 Models.	Reg. and Ext. Cab		Crew Cab	Reg., Ext. and Crew Cab	Ext. and Crew Cab	
			Work Truck 1WT[1]	LS 1LS[1]	LS 2LS[2]	LT1 1LT[3]	LT2 2LT[4]	LT3 3LT[4]
VB3		**Bumper**, rear chrome		■		■	■	■
K34		**Cruise control**		■		■	■	■
C49		**Defogger**, rear-window		■		■	■	■
UB0		**Audio system**, AM/FM stereo with CD player 1 - Upgradeable to (UC6) AM/FM stereo with 6-disc in-dash CD changer or (UB1) AM/FM stereo with CD and cassette player when (PDJ) Extended and Crew Cab South-West LT Package is ordered. Includes 4 speakers on Regular Cab and 6 speakers on Extended and Crew Cab models.		■		□[1]	□[1]	
	**D	**Seat trim**, Custom Cloth		■		■	■	
	PY9	**Wheels**, 4 - 17" x 7.5" (43.2 cm x 19.1 cm) 6-lug chrome-styled steel 1 - Upgradeable to (P25) 4 - 17" x 7.5" (43.2 cm x 19.1 cm) 6-lug polished cast aluminum wheels.		■		□[1]	□[1]	
	AE7	**Seats**, front 40/20/40 split-bench		■		■		
	DK7	**Console**, overhead mini				■	■	■
AU3		**Door locks**, power				■	■	■
B30		**Floor covering**, color-keyed carpeting 1 - May be substituted with (BG9) rubberized vinyl floor covering on Regular and Extended Cab models. Not available with (**V) vinyl interior trim.				□[1]	■	■
AJ1		**Glass**, Solar-Ray deep-tinted				■	■	■
	TR3	**Grille**, chrome surround with black insert				■	■	■
	DF5	**Mirror**, inside rearview auto-dimming				■	■	■
B85		**Moldings**, bodyside				■	■	■
	AU0	**Remote Keyless Entry**				■	■	■
	NP5	**Steering wheel**, leather-wrapped, Black				■	■	■
	A31	**Windows**, power				■	■	■
	DL8	**Mirrors**, outside heated power-adjustable, Black 1 - Upgradeable to (DL3) outside, heated, power-adjustable, power-folding, Black mirrors or (DPN) outside vertical camper mirrors.				□[1]	□[1]	

2007 Chevrolet Truck Silverado 1500 PEG STAIRSTEP
Classic

Free Flow RPO Code	Ref. Only RPO Code	Description 1 - Equipment Groups 1WT and 1LS available on CC15*03, CK15*03, CC15753, CK15753, CC15953 and CK15953 Models. 2 - Equipment Group 2LS available on C*15543 Models. 3 - Equipment Groups 1LT available on all models. 4 - Equipment Groups 2LT and 3LT available on CC15*53, CK15*53, and C*15543 Models.	Reg. and Ext. Cab		Crew Cab	Reg., Ext. and Crew Cab	Ext. and Crew Cab	
			Work Truck 1WT[1]	LS 1LS[1]	LS 2LS[2]	LT1 1LT[3]	LT2 2LT[4]	LT3 3LT[4]
	UQ3	**Audio system feature**, speaker system				■		
LR4		**Engine**, Vortec 4.8L V8 SFI				■		
CJ2		**Air conditioning**, dual-zone automatic climate control					■	■
	UK6	**Audio system controls**, rear					■	■
	UQ7	**Audio system feature**, Bose premium speaker system					■	■
	D07	**Console**, floor					■	■
L33		**Engine**, Vortec 5.3L V8 SFI					■	■
T96		**Fog lamps**, front					■	■
AG1		**Seat adjuster**, driver 6-way power					■	■
UK3		**Steering wheel controls**, mounted audio and Driver Information Center controls					■	■
Z85		**Suspension Package**, Handling/Trailering					■	■
NP8		**Transfer case**, electronic Autotrac					■	■
A95		**Seats**, front bucket					■	
UC6		**Audio system**, AM/FM stereo with 6-disc CD changer						■
DL3		**Mirrors**, outside heated power-adjustable, power-folding and driver-side auto-dimming, Black 1 - Upgradeable to (DPN) outside vertical camper mirrors. Includes curb-tilt when (UK3) steering-wheel mounted audio controls is ordered.						□[1]
	AG2	**Seat adjuster**, front passenger 10-way power						■
	AN3	**Seats**, front bucket						■
	**2	**Seat trim**, leather						■
P25		**Wheels**, 4 - 17" x 7.5" (43.2 cm x 19.1 cm) 6-lug polished cast aluminum						■

S = Standard Equipment A = Available – (dashes) = Not Available D = ADI Available
■ = Included in Equipment Group □ = Included in Equipment Group but upgradeable

*Indicates availability of feature on multiple models. For example, it indicates feature availability on 2WD and 4WD Models or Rear wheel drive and All-wheel drive Models.

Codes listed in the shaded column titled Ref. Only RPO Code are for internal use only and should not be ordered.

Free Flow RPO Code	Ref. Only RPO Code	Description 1 - Equipment Groups 1WT and 1LS available on CC15*03, CK15*03, CC15753, CK15753, CC15953 and CK15953 Models. 2 - Equipment Group 2LS available on C*15543 Models. 3 - Equipment Groups 1LT available on all models. 4 - Equipment Groups 2LT and 3LT available on CC15*53, CK15*53, and C*15543 Models.	Reg. and Ext. Cab		Crew Cab	Reg., Ext. and Crew Cab	Ext. and Crew Cab	
			Work Truck 1WT[1]	LS 1LS[1]	LS 2LS[2]	LT1 1LT[3]	LT2 2LT[4]	LT3 3LT[4]
		Air bags, frontal, driver and right-front passenger with Passenger Sensing System 1 - Always use safety belts and the correct child restraints for your child's age and size. Even in vehicles equipped with air bags and the Passenger Sensing System, children are safer when properly secured in a rear seat. Never place a rear-facing infant restraint in the front seat of any vehicle equipped with an active frontal air bag. See the vehicle's Owner's Manual and child safety seat instructions for more safety information.	S[1]	S[1]	S[1]	S[1]	S[1]	S[1]
CJ3		**Air conditioning**, dual-zone manual climate control with individual climate settings for driver and right-front passenger 1 - Standard on Extended Cab models only.	A[1]	S	S	S	--	--
	C42	**Air conditioning delete**, provides heater only 1 - Requires Regular Cab models.	S[1]	--	--	--	--	--
CJ2		**Air conditioning**, dual-zone automatic climate control with individual climate settings for driver and right-front passenger 1 - Not available with Regular models or (VYU) Snow Plow Prep Package.	--	--	--	A[1]	■	■
		Assist handle, front passenger 1 - Also includes outboard rear assist handle on Extended or Crew Cab models.	S[1]	S[1]	S[1]	S[1]	S[1]	S[1]
	UM7	**Audio system**, AM/FM stereo with seek-and-scan and digital clock	S	--	--	--	--	--
UB0		**Audio system**, AM/FM stereo with CD player, seek-and-scan, digital clock, auto-tone control, Radio Data System (RDS) and speed-compensated volume 1 - Upgradeable to (UC6) AM/FM stereo with 6-disc in-dash CD changer or (UB1) AM/FM stereo with CD and cassette player when (PDJ) Extended and Crew Cab South-West LT Package is ordered. Includes 4 speakers on Regular Cab and 6 speakers on Extended and Crew Cab models.	A	■	S	□[1]	□[1]	--

Free Flow RPO Code	Ref. Only RPO Code	Description 1 - Equipment Groups 1WT and 1LS available on CC15*03, CK15*03, CC15753, CK15753, CC15953 and CK15953 Models. 2 - Equipment Group 2LS available on C*15543 Models. 3 - Equipment Groups 1LT available on all models. 4 - Equipment Groups 2LT and 3LT available on CC15*53, CK15*53, and C*15543 Models.	Reg. and Ext. Cab		Crew Cab	Reg., Ext. and Crew Cab	Ext. and Crew Cab	
			Work Truck 1WT[1]	LS 1LS[1]	LS 2LS[2]	LT1 1LT[3]	LT2 2LT[4]	LT3 3LT[4]
UB1		**Audio system**, AM/FM stereo with CD and cassette player, seek-and-scan, digital clock, auto-tone control, Radio Data System (RDS), speed-compensated volume, TheftLock and 4 speakers on Regular Cab and 6 speakers on Crew Cab models (with bucket seats includes a Bose speaker system, amplifier and subwoofer) 1 - Requires (PDJ) Extended and Crew Cab South-West LT Package.	--	--	--	A[1]	A[1]	--
UC6		**Audio system**, AM/FM stereo with 6-disc CD changer, seek-and-scan, digital clock, auto-tone control, Radio Data System (RDS), speed-compensated volume and TheftLock	--	--	--	A	A	■
	UQ5	**Audio system feature**, 4-speaker system	S	S	--	--	--	--
	UQ3	**Audio system feature**, speaker system 1 - Includes 6 speakers. 2 - Includes 4 speakers on Regular Cab and 6 speakers on Extended and Crew Cab Models.	--	--	S[1]	■[2]	--	--
	UQ7	**Audio system feature**, Bose premium speaker system with sub-woofer in center console 1 - Included and only available with (A95) front reclining bucket seats.	--	--	--	A[1]	■	■
	UK6	**Audio system controls**, rear with 2 headphone jacks (headphones not included), power outlet and controls for volume, station selection and media 1 - Requires Crew Cab Models. Included and only available with (A95) front reclining bucket seats. 2 - Requires Crew Cab models.	--	--	--	A[1]	■[2]	■[2]
		Cigarette lighter, on instrument panel	S	S	S	S	S	S
		Coat hook, driver-side rear 1 - Also includes passenger-side coat hook on Extended and Crew Cab models.	S[1]	S[1]	S[1]	S[1]	S[1]	S[1]
	D07	**Console**, floor with storage compartment and dual cup holders 1 - Included and only available with (A95) front reclining bucket seats.	--	--	--	A[1]	■	■
	DK7	**Console**, overhead mini with map lights 1 - Not available with (CF5) power sunroof.	--	--	S	■	■[1]	■[1]
	DK8	**Console**, overhead deluxe 1 - Included and only available with (CF5) power sunroof.	--	--	--	--	A[1]	A[1]
K34		**Cruise control**, electronic with set and resume speed	A	■	S	■	■	■

Free Flow RPO Code	Ref. Only RPO Code	Description 1 - Equipment Groups 1WT and 1LS available on CC15*03, CK15*03, CC15753, CK15753, CC15953 and CK15953 Models. 2 - Equipment Group 2LS available on C*15543 Models. 3 - Equipment Groups 1LT available on all models. 4 - Equipment Groups 2LT and 3LT available on CC15*53, CK15*53, and C*15543 Models.	Reg. and Ext. Cab		Crew Cab	Reg., Ext. and Crew Cab	Ext. and Crew Cab	
			Work Truck 1WT[1]	LS 1LS[1]	LS 2LS[2]	LT1 1LT[3]	LT2 2LT[4]	LT3 3LT[4]
		Cup holders, front 1 - Also includes rear cupholders on Extended and Crew Cab models.	S[1]	S[1]	S[1]	S[1]	S[1]	S[1]
C49		**Defogger**, rear-window electric 1 - Not available with (A28) sliding rear window or (C42) air conditioning delete. Available with Fleet and Government order types only. 2 - Not available with (A28) sliding rear window.	A[1]	■[2]	A[2]	■[2]	■[2]	■[2]
AU3		**Door locks**, power 1 - Available with Fleet and Government order types only.	A[1]	A	S	■	■	■
		Driver Information Center that monitors numerous different systems depending on vehicle equipment	S	S	S	S	S	S
U42		**Entertainment system**, rear seat DVD player with LCD display and 2 sets of wireless headphones 1 - Requires Crew Cab models.	--	--	--	--	A[1]	A[1]
BG9		**Floor covering**, Black rubberized-vinyl 1 - Not available with C*15543 models. Not available with (922) Medium Gray leather seating surfaces.	S	S	--	A[1]	--	--
B30		**Floor covering**, color-keyed carpeting with rubberized vinyl floor mats (Extended and Crew Cab models also include rear floor mats) 1 - Available with Fleet and Government order types only. Not available with (**V) vinyl interior trim. 2 - Not available with (**V) vinyl interior trim. 3 - May be substituted with (BG9) rubberized vinyl floor covering on Regular and Extended Cab models. Not available with (**V) vinyl interior trim.	A[1]	A[2]	S	□[3]	■	■
		Instrumentation, analog with speedometer, odometer with trip odometer, fuel level, voltmeter, engine temperature, oil pressure and tachometer	S	S	S	S	S	S
		Lighting, interior with dome and reading lights, illuminated entry feature and backlit instrument panel switches	S	S	S	S	S	S
		Mirror, inside rearview manual day/night	S	S	S	--	--	--
	DF5	**Mirror**, inside rearview auto-dimming with 8-point compass and outside temperature display	--	--	--	■	■	■

Free Flow RPO Code	Ref. Only RPO Code	Description 1 - Equipment Groups 1WT and 1LS available on CC15*03, CK15*03, CC15753, CK15753, CC15953 and CK15953 Models. 2 - Equipment Group 2LS available on C*15543 Models. 3 - Equipment Groups 1LT available on all models. 4 - Equipment Groups 2LT and 3LT available on CC15*53, CK15*53, and C*15543 Models.	Reg. and Ext. Cab		Crew Cab	Reg., Ext. and Crew Cab	Ext. and Crew Cab	
			Work Truck 1WT[1]	LS 1LS[1]	LS 2LS[2]	LT1 1LT[3]	LT2 2LT[4]	LT3 3LT[4]
UE1		**OnStar**, 1-year of Safe and Sound plan. Includes Automatic Notification of Air Bag Deployment, Stolen Vehicle Location Assistance, Emergency Services, Roadside Assistance, Remote Door Unlock, OnStar Vehicle Diagnostics, Hands-Free Calling, AccidentAssist and Remote Horn & Lights 1 - OnStar services require vehicle electrical system (including battery), wireless service and GPS satellite signals to be available and operating for features to function properly. OnStar acts as a link to existing emergency service providers. OnStar Vehicle Diagnostics available on most 2004 MY and newer GM vehicles. Diagnostic capability varies by model. Visit onstar.com for system limitations and details. Requires (UK3) steering-wheel mounted audio controls. Not available with a ship-to of Puerto Rico or the Virgin Islands.	--	--	--	A[1]	A[1]	A[1]
PDB		**OnStar Plus Package**, includes (U2K) XM Satellite Radio, (UE1) OnStar and (UK3) steering-wheel mounted audio controls 1 - Package does not include (U2K) XM Satellite Radio when ordered outside the 48 contiguous United States. Not available with a ship-to of Puerto Rico or the Virgin Islands.	--	--	--	A[1]	A[1]	A[1]
R6Q		**OnStar Plus Package discount not desired** 1 - Required when content within option package is ordered and entire package is not desired.	--	--	--	A[1]	A[1]	A[1]
		Power outlets, 2 auxiliary instrument panel-mounted with covers, 12-volt	S	S	S	S	S	S
	AU0	**Remote Keyless Entry**, with 2 transmitters, panic button and content theft alarm	--	--	S	■	■	■
	**V	**Seat trim**, vinyl	S	A	--	--	--	--
	**C	**Seat trim**, cloth	A	A	--	--	--	--
	**D	**Seat trim**, Custom Cloth	A	■	S	■	■	--
	**2	**Seat trim**, leather 1 - Not available on Regular Cab models. Extended Cab models include front leather seating surfaces with rear vinyl bench. Crew Cab models include front and rear leather-appointed seating surfaces.	--	--	--	A[1]	A[1]	■[1]
	AE7	**Seats**, front 40/20/40 split-bench, 3-passenger, driver and front passenger manual reclining with outboard head restraints	S	A	--	--	--	--

Free Flow RPO Code	Ref. Only RPO Code	Description 1 - Equipment Groups 1WT and 1LS available on CC15*03, CK15*03, CC15753, CK15753, CC15953 and CK15953 Models. 2 - Equipment Group 2LS available on C*15543 Models. 3 - Equipment Groups 1LT available on all models. 4 - Equipment Groups 2LT and 3LT available on CC15*53, CK15*53, and C*15543 Models.	Reg. and Ext. Cab		Crew Cab	Reg., Ext. and Crew Cab	Ext. and Crew Cab	
			Work Truck 1WT[1]	LS 1LS[1]	LS 2LS[2]	LT1 1LT[3]	LT2 2LT[4]	LT3 3LT[4]
	AE7	**Seats**, front 40/20/40 split-bench, 3-passenger, driver and front passenger manual reclining, center fold-down armrest with storage, adjustable outboard head restraints and storage pockets on Extended and Crew Cab models 1 - Requires (**D) Custom Cloth seat trim.	--	□[1]	S	□	--	--
A95		**Seats**, front bucket, includes (AG1) 6-way power driver seat adjuster, front passenger manual recline, adjustable outboard head restraints, inboard armrests and storage pockets 1 - Requires Extended or Crew Cab Models. - Requires Fleet and Government order types only. Includes (D07) floor console and (UQ7) Bose Premium speaker system. Also includes (UK6) rear audio controls on Crew Cab Models. On 4WD Models, also requires (NP8) electronic Autotrac transfer case.	--	--	--	A[1]	□	--
	AN3	**Seats**, front bucket, includes 10-way power driver and front passenger seat adjusters, 2-way power lumbar control, heated seat cushions and seatbacks, 2-position driver memory, adjustable outboard head restraints, floor console, dual inboard armrests and storage pockets	--	--	--	--	--	□
		Seats, rear full-width bench, 3-passenger, folding (includes child seat top tether anchor) 1 - Requires Extended or Crew Cab models.	S[1]	S[1]	S	S[1]	S	S
AG1		**Seat adjuster**, driver 6-way power 1 - Included with (**2) Seat trim, leather seating surfaces on Extended or Crew Cab Models. Included with (A95) front reclining bucket seats. 2 - With (AN3) front full-feature bucket seats, includes 10-way power seat adjusters.	--	--	--	A[1]	□	□[2]
	AG2	**Seat adjuster**, front passenger 10-way power 1 - Included and only available with (AN3) front full-feature bucket seats.	--	--	--	--	--	□[1]
DNH		**Regular production accessory**, Underseat storage, rear, lockable 1 - Requires Extended Cab models. Not available with C*15553 models. With CK15953 models not available with (BVS) Regular production accessory, chrome-plated, tubular, assist steps, (BVE) Regular production accessory, Black-coated, tubular assist steps, or (EN6) Regular production accessory, hard, Black tonneau cover. For additional GM Accessory Offerings and Installation, please contact your local GM Accessory Distributor Installer (ADI).	A/D[1]	A/D[1]	--	A/D[1]	A/D[1]	A/D[1]
		Steering column, Tilt-Wheel, adjustable with brake/transmission shift interlock	S	S	S	S	S	S
		Steering wheel, includes theft-deterrent locking feature	S	S	S	--	--	--

Free Flow RPO Code	Ref. Only RPO Code	Description 1 - Equipment Groups 1WT and 1LS available on CC15*03, CK15*03, CC15753, CK15753, CC15953 and CK15953 Models. 2 - Equipment Group 2LS available on C*15543 Models. 3 - Equipment Groups 1LT available on all models. 4 - Equipment Groups 2LT and 3LT available on CC15*53, CK15*53, and C*15543 Models.	Reg. and Ext. Cab		Crew Cab	Reg., Ext. and Crew Cab	Ext. and Crew Cab	
			Work Truck 1WT[1]	LS 1LS[1]	LS 2LS[2]	LT1 1LT[3]	LT2 2LT[4]	LT3 3LT[4]
	NP5	**Steering wheel**, leather-wrapped, Black with theft-deterrent locking feature	--	--	--	□	□	□
UK3		**Steering wheel controls**, mounted audio and Driver Information Center controls which provides access to enhanced Driver Information Center features and information	--	--	--	A	□	□
CF5		**Sunroof**, power, tilt-sliding with express-open and wind deflector, includes (UG1) Universal Home Remote	--	--	--	--	A	A
		Theft-deterrent system, PASSlock II	S	S	S	S	S	S
		Tools, mechanical jack and wheel wrench located in back of cab	S	S	S	S	S	S
	UG1	**Universal Home Remote** 1 - Included and only available with (CF5) power sunroof.	--	--	--	--	A[1]	A[1]
		Visors, driver and front passenger, padded with cloth trim, extenders, pocket on driver-side and vanity mirror on passenger-side, Shale-colored	S	S	S	S	S	S
		Warning tones, headlamp on, key-in-ignition, driver and passenger buckle up reminder and turn signal on	S	S	S	S	S	S
	A31	**Windows**, power with driver and front passenger Express-Down	--	--	S	□	□	□
A28		**Window**, manual rear-sliding, deep-tinted 1 - Requires (AJ1) Solar-Ray deep-tinted glass. Deletes or not available with (C49) rear-window defogger when ordered.	A[1]	A[1]	A[1]	A[1]	A[1]	A[1]
U2K		**XM Satellite Radio**. With a wide variety of programming, XM has something to excite any driver. Whether you want to be entertained or informed, to laugh, think, or sing, XM has the perfect channel for you - coast-to-coast, and in digital-quality sound. 3 trial months - no obligation 1 - Available in the 48 contiguous United States. Required $12.95 monthly subscription sold separately. All fees and programming subject to change. Subscription subject to customer agreement. For more information, visit gm.xmradio.com.	--	--	--	A[1]	A[1]	A[1]

S = Standard Equipment A = Available -- (dashes) = Not Available D = ADI Available
■ = Included in Equipment Group □ = Included in Equipment Group but upgradeable

*Indicates availability of feature on multiple models. For example, it indicates feature availability on 2WD and 4WD Models or Rear wheel drive and All-wheel drive Models.

Codes listed in the shaded column titled Ref. Only RPO Code are for internal use only and should not be ordered.

Free Flow RPO Code	Ref. Only RPO Code	Description 1 - Equipment Groups 1WT and 1LS available on CC15*03, CK15*03, CC15753, CK15753, CC15953 and CK15953 Models. 2 - Equipment Group 2LS available on C*15543 Models. 3 - Equipment Groups 1LT available on all models. 4 - Equipment Groups 2LT and 3LT available on CC15*53, CK15*53, and C*15543 Models.	Reg. and Ext. Cab		Crew Cab	Reg., Ext. and Crew Cab	Ext. and Crew Cab	
			Work Truck 1WT[1]	LS 1LS[1]	LS 2LS[2]	LT1 1LT[3]	LT2 2LT[4]	LT3 3LT[4]
PDG		**Texas/Oklahoma/Louisiana LS Package**, includes (AJ1) Solar-Ray deep-tinted glass, (K47) high-capacity air cleaner, (AU3) power programmable door locks and (LU3) Vortec 4.3L V6 MFI engine **1 - Requires C*15703 or C*15903 models. Requires delivery to residents of TX/OK/LA and select counties in New Mexico, Arkansas and Kansas. Requires and only available with (LU3) Vortec 4.3L V6 MFI engine. Not available with Fleet or Government order types.**	--	A[1]	--	--	--	--
PDJ		**South-West LT Extended and Crew Cab Package**, includes (K47) high-capacity air cleaner, (T96) fog lamps, (**D) Custom Cloth seat trim and (UB1) AM/FM stereo with CD and cassette player (upgradeable to (UC6) AM/FM stereo with 6-disc in-dash CD changer) **1 - Requires CC15753, CC15553 or CC15543 models. Not available with (**2) leather seating surfaces. Not available with Fleet or Government order types. Requires delivery to residents in TX/OK/LA/CA/FL/NM/NV/AZ and select counties in Mississippi, Alabama, Georgia, Arkansas and Kansas. Delivery outside of these parameters will result in a charge back to the ORIGINAL invoicing dealer.**	--	--	--	A[1]	A[1]	--
R7C		**Residency based package override**	--	A	--	A	A	--
R6X		**Texas/Oklahoma/Louisiana Package discounts (PDG) or (PDJ) not desired**	--	A	--	A	A	--

Free Flow RPO Code	Ref. Only RPO Code	Description 1 - Equipment Groups 1WT and 1LS available on CC15*03, CK15*03, CC15753, CK15753, CC15953 and CK15953 Models. 2 - Equipment Group 2LS available on C*15543 Models. 3 - Equipment Groups 1LT available on all models. 4 - Equipment Groups 2LT and 3LT available on CC15*53, CK15*53, and C*15543 Models.	Reg. and Ext. Cab		Crew Cab	Reg., Ext. and Crew Cab	Ext. and Crew Cab	
			Work Truck 1WT[1]	LS 1LS[1]	LS 2LS[2]	LT1 1LT[3]	LT2 2LT[4]	LT3 3LT[4]
B2E		**Silverado Limited Edition**, includes (PDU) Light Duty Performance Package, (GT4) 3.73 rear axle ratio, (UK3) steering-wheel mounted audio controls, (QR9) 4 - 20" x 8.5" 5-spoke chromed cast aluminum wheels, (QSS) P275/55R20 touring blackwall tires, (ZAN) P265/70R17 blackwall spare tire and 17" steel spare wheel **1 - Requires C*15553, C*15753 or C*15543 models. Option content within this package may not be substituted or deleted. Not available with (Z85) Handling/Trailering Suspension Package, (ZY2) two-tone paint, (NW7) traction assist system, (VYU) Snow Plow Prep Package, (NHT) Vortec Max Performance Pack, (B4V) Silverado Performance Edition or any (SEO) Special Equipment Options. 4WD (B2E) Silverado Limited Edition models build with code Z71 however Z71 used with B2E will NOT include: (B71) Wheel flares, (NZZ) Skid Plate Package, 1.81" Front shocks, 1.81" Rear shocks or Z71 Decals on Pickup Box.**	--	--	--	A[1]	A[1]	A[1]
PDX		NEW! **Extended Cab Value Package**, includes (LM7) Vortec 5.3L V8 SFI engine, (L33) Vortec 5.3L V8 SFI aluminum block engine or (L59) Vortec 5.3L V8 SFI FlexFuel engine, (G80) heavy-duty automatic locking rear differential, (Z82) heavy-duty trailering equipment, (P25) 4 - 17" x 7.5" (43.2 cm x 19.1 cm) 6-lug polished cast aluminum wheels and (BVE) chrome plated tubular assist steps **1 - Requires C*15753 Models. Not available with (NHT) Vortec Max Performance Pack, (PDU) Light Duty Power Package, (B2E) Silverado Limited Edition, or (B4V) Silverado Performance Edition.**	--	--	--	A[1]	--	--
PDZ		NEW! **Crew Cab Value Package**, includes (L59) Vortec 5.3L V8 SFI FlexFuel engine, (G80) heavy-duty automatic locking rear differential, (Z82) heavy-duty trailering equipment, (P25) 4 - 17" x 7.5" (43.2 cm x 19.1 cm) 6-lug polished cast aluminum wheels and (PPB) aluminum pickup bed extender **1 - Requires Crew Cab Models. Not available with (NHT) Vortec Max Performance Pack, (PDU) Light Duty Power Package, (B2E) Silverado Limited Edition, or (B4V) Silverado Performance Edition.**	--	--	--	A[1]	--	--
R6S		**Value Package discount not desired** **1 - Requires C*15753 or C*15543 Models. On C*15753 Models, all (PDU) Light Duty Power Package orders without (P25) 6-lug polished cast aluminum wheels or (BVE) Regular production accessory, Assist steps, chrome plated tubular must order (PDX) Extended Cab Value Package or (R6S) Value Package Discount not desired. On C*15543 Models, all (PDU) Light Duty Power Package orders without (P25) 6-lug polished cast aluminum wheels or (PPB) aluminum pickup bed extender must order (PDZ) Crew Cab Value Package or (R6S) Value Package Discount not desired.**	--	--	--	A[1]	--	--

2007 Chevrolet Truck Silverado 1500 EXTERIOR
Classic

Free Flow RPO Code	Ref. Only RPO Code	Description 1 - Equipment Groups 1WT and 1LS available on CC15*03, CK15*03, CC15753, CK15753, CC15953 and CK15953 Models. 2 - Equipment Group 2LS available on C*15543 Models. 3 - Equipment Groups 1LT available on all models. 4 - Equipment Groups 2LT and 3LT available on CC15*53, CK15*53, and C*15543 Models.	Reg. and Ext. Cab		Crew Cab	Reg., Ext. and Crew Cab	Ext. and Crew Cab	
			Work Truck 1WT[1]	LS 1LS[1]	LS 2LS[2]	LT1 1LT[3]	LT2 2LT[4]	LT3 3LT[4]
		Air dam, Gray	S	S	S	S	S	S
	VG3	**Bumper**, front chrome with Gray lower	S	S	S	S	S	S
	V43	**Bumper**, rear painted, step-style with pad	S	--	--	--	--	--
VB3		**Bumper**, rear chrome, step-style with pad	A	■	S	■	■	■
VF7		**Bumper**, rear delete 1 - Requires a Fleet order type only.	A[1]	--	--	--	--	--
CWB		**Chrome Exterior Package**, includes chrome door handles and chrome-capped exterior mirrors 1 - Requires (DL8) outside power-adjustable mirrors. Not available with (15U) Sandstone Metallic, (50U) Summit White or (59U) Silver Birch Metallic.	--	--	A[1]	A[1]	A[1]	--
		Daytime Running Lamps, with automatic exterior lamp control	S	S	S	S	S	S
T96		**Fog lamps**, front, halogen	--	--	--	A	■	■
		Glass, Solar-Ray light-tinted, all windows	S	S	S	--	--	--
AJ1		**Glass**, Solar-Ray deep-tinted (all windows except light-tinted glass on windshield and driver- and front passenger-side glass) 1 - With Extended Cab models, includes rear window and rear quarter windows. With Crew Cab models or (C49) rear-window defogger, includes light-tinted rear window.	A[1]	A[1]	A[1]	■[1]	■[1]	■[1]
		Grille, Gray surround with chrome accent bar	S	S	--	--	--	--
	TR3	**Grille**, chrome surround with black insert	--	--	S	■	■	■
VNX		**Grille** , delete	A	A	A	A	A	A
		Headlamps, dual halogen composite with automatic exterior lamp control and flash-to-pass feature	S	S	S	S	S	S
		Lamps, dual cargo area lamps	S	S	S	S	S	S
	DE2	**Mirrors**, outside manual, Black, manual-folding	S	S	--	--	--	--
DF2		**Mirrors**, outside high-visibility camper-style, Black, manual-folding and extension, includes a dual-segment mirror on the driver-side that provides enhanced wide angle capacity (not recommended for bodies or trailers wider than 86" [218.4 cm])	A	A	--	--	--	--
	DL8	**Mirrors**, outside heated power-adjustable, Black, manual-folding 1 - Upgradeable to (DL3) outside, heated, power-adjustable, power-folding, Black mirrors or (DPN) outside vertical camper mirrors.	--	--	S	□[1]	□[1]	--

2007 Chevrolet Truck Silverado 1500 EXTERIOR
Classic

Free Flow RPO Code	Ref. Only RPO Code	Description 1 - Equipment Groups 1WT and 1LS available on CC15*03, CK15*03, CC15753, CK15753, CC15953 and CK15953 Models. 2 - Equipment Group 2LS available on C*15543 Models. 3 - Equipment Groups 1LT available on all models. 4 - Equipment Groups 2LT and 3LT available on CC15*53, CK15*53, and C*15543 Models.	Reg. and Ext. Cab		Crew Cab	Reg., Ext. and Crew Cab	Ext. and Crew Cab	
			Work Truck 1WT[1]	LS 1LS[1]	LS 2LS[2]	LT1 1LT[3]	LT2 2LT[4]	LT3 3LT[4]
DL3		**Mirrors**, outside heated power-adjustable, power-folding and driver-side auto-dimming, Black with integrated turn signal indicators 1 - Curb-tilt feature requires (UK3) steering-wheel mounted audio controls. 2 - Upgradeable to (DPN) outside vertical camper mirrors. Includes curb-tilt when (UK3) steering-wheel mounted audio controls is ordered.	--	--	--	A[1]	A[1]	□[2]
DPN		**Mirrors**, outside heated power-adjustable vertical camper manual-folding and extension, integrated turn signal indicators and lower convex spotter glass (convex glass is not heated)	--	--	--	A	A	A
B85		**Moldings**, bodyside 1 - Moldings are Black. 2 - Moldings are body-colored with chrome insert, see Color and Trim chart for compatibility.	--	A[1]	S[2]	■[2]	■[2]	■[2]
	ZY1	**Paint**, solid	S	S	S	S	S	S
ZY2		**Paint**, two-tone 1 - Requires C*15753 or C*15553 models.	--	--	--	A[1]	A[1]	A[1]
	E63	**Pickup box**, Fleetside	S	S	S	S	S	S
	V76	**Recovery hooks**, front, frame-mounted	S	S	S	S	S	S
BVE		**Regular production accessory**, Assist steps, chrome plated tubular, stainless steel 1 - For additional GM Accessory Offerings and installation, please contact your local GM Accessory Distributor Installer (ADI).	A/D[1]	A/D[1]	A/D[1]	A/D[1]	A/D[1]	A/D[1]
BVS		**Regular production accessory**, Assist steps, Black coated tubular, stainless steel 1 - For additional GM Accessory Offerings and installation, please contact your local GM Accessory Distributor Installer (ADI).	A/D[1]	A/D[1]	A/D[1]	A/D[1]	A/D[1]	A/D[1]
BVU		**Regular production accessory**, Assist steps, molded plastic, Black 1 - Requires Crew Cab models. For additional GM Accessory Offerings and installation, please contact your local GM Accessory Distributor Installer (ADI).	--	--	A/D[1]	A/D[1]	A/D[1]	A/D[1]
PPB		**Regular production accessory**, Pickup bed extender, brushed aluminum 1 - For additional GM Accessory Offerings and installation, please contact your local GM Accessory Distributor Installer (ADI).	A/D[1]	A/D[1]	A/D[1]	A/D[1]	A/D[1]	A/D[1]

Free Flow RPO Code	Ref. Only RPO Code	Description 1 - Equipment Groups 1WT and 1LS available on CC15*03, CK15*03, CC15753, CK15753, CC15953 and CK15953 Models. 2 - Equipment Group 2LS available on C*15543 Models. 3 - Equipment Groups 1LT available on all models. 4 - Equipment Groups 2LT and 3LT available on CC15*53, CK15*53, and C*15543 Models.	Reg. and Ext. Cab		Crew Cab	Reg., Ext. and Crew Cab	Ext. and Crew Cab	
			Work Truck 1WT[1]	LS 1LS[1]	LS 2LS[2]	LT1 1LT[3]	LT2 2LT[4]	LT3 3LT[4]
PUB		**Regular production accessory**, Pickup bed protectors, Top side rails, Black molded 1 - Not available with C*15543 or C*15553 models, (E95) Regular production accessory, soft, Black tonneau cover, or (EN6) Regular production accessory, hard, Black tonneau cover. For additional GM Accessory Offerings and Installation, please contact your local GM Accessory Distributor Installer (ADI).	A/D[1]	A/D[1]	--	A/D[1]	A/D[1]	A/D[1]
E95		**Regular production accessory**, Tonneau cover, Black, soft 1 - Not available with (PUB) Regular production accessory, top side rail, Black-molded pickup bed protectors. For additional GM Accessory Offerings and Installation, please contact your local GM Accessory Distributor Installer (ADI).	A/D[1]	A/D[1]	A/D[1]	A/D[1]	A/D[1]	A/D[1]
EN6		**Regular production accessory**, Tonneau cover, Black, hard, folding, lockable 1 - Not available with (PUB) Regular production accessory, top side rail, Black-molded pickup bed protectors. When ordered on CK15953 models, not available with (DNH) Regular production accessory, rear underseat storage, (BVE) Regular production accessory, chrome-plated, tubular assist steps, or (BVS) Regular production accessory, Black-coated, tubular assist steps. For additional GM Accessory Offerings and Installation, please contact your local GM Accessory Distributor Installer (ADI).	A/D[1]	A/D[1]	A/D[1]	A/D[1]	A/D[1]	A/D[1]
SAF		**Spare tire lock**, keyed cylinder lock that utilizes same key as ignition and door	A	A	A	A	A	A
		Tire carrier, outside spare, winch-type mounted under frame at rear	S	S	S	S	S	S
		Tire, full-size spare, 17" (43.2 cm) steel, located at rear underbody of vehicle	S	S	S	S	S	S
	QPR	**Tires**, P245/70R17 all-season, blackwall 1 - Requires 2WD models.	S[1]	S[1]	S[1]	S[1]	S[1]	S[1]
QPO		**Tires**, P245/70R17 all-season, White outlined-letter 1 - Requires 2WD models.	A[1]	A[1]	--	A[1]	A[1]	A[1]
	QVL	**Tires**, P265/70R17 all-season, blackwall 1 - Requires 4x4 Regular and Extended Cab models. 2 - Requires 4x4 Extended Cab models.	S[1]	S[1]	--	S[1]	S[2]	S[2]
QVM		**Tires**, P265/70R17 all-season, White outlined-letter, includes a blackwall spare tire 1 - Requires 4x4 Regular and Extended Cab models. 2 - Requires 4x4 Extended Cab models.	A[1]	A[1]	--	A[1]	A[2]	A[2]

Free Flow RPO Code	Ref. Only RPO Code	Description 1 - Equipment Groups 1WT and 1LS available on CC15*03, CK15*03, CC15753, CK15753, CC15953 and CK15953 Models. 2 - Equipment Group 2LS available on C*15543 Models. 3 - Equipment Groups 1LT available on all models. 4 - Equipment Groups 2LT and 3LT available on CC15*53, CK15*53, and C*15543 Models.	Reg. and Ext. Cab		Crew Cab	Reg., Ext. and Crew Cab	Ext. and Crew Cab	
			Work Truck 1WT[1]	LS 1LS[1]	LS 2LS[2]	LT1 1LT[3]	LT2 2LT[4]	LT3 3LT[4]
QJP		**Tires**, P265/70R17 on-/off-road, blackwall, includes an on-/off-road blackwall spare 1 - Requires CK15953 models and (Z85) Handling/Trailering Suspension Package and Fleet or Government order types. 2 - Requires 4x4 models. 3 - Requires 4x4 models. With CK15*03 and CK15*53 models requires (Z71) Off-Road Suspension Package. With CK15953 models and Fleet or Government order types or CK15543 models requires (Z71) Off-Road Suspension Package or (Z85) Handling/Trailering Suspension Package. Also available with 2WD and 4x4 (NHT) Vortec Max Performance Pack. Not available with (B2E) Silverado Limited Edition or (B4V) Silverado Performance Edition.	A[1]	A[1]	S[2]	A[3]	A[3]	A[3]
QJM		**Tires**, P265/70R17 on-/off-road, White outlined-letter, includes a on-/off-road blackwall spare 1 - Requires CK15953 models and (Z85) Handling/Trailering Suspension Package and Fleet or Government order types. 2 - Requires 4x4 models. With CK15*03 and CK15*53 models requires (Z71) Off-Road Suspension Package. With CK15953 models and Fleet or Government order types or CK15543 requires (Z71) Off-Road Suspension Package or (Z85) Handling/Trailering Suspension Package. Also available with 2WD and 4x4 (NHT) Vortec Max Performance Pack. Not available with (B2E) Silverado Limited Edition or (B4V) Silverado Performance Edition.	A[1]	A[1]	--	A[2]	A[2]	A[2]
QXR		**Tires**, LT245/70R17 all-terrain, blackwall, 6-ply load range C 1 - Requires 4x4 models. Requires (Z85) Handling/Trailering Suspension Package. Not available with CK15953 models. 2 - Requires 4WD Models. Requires (Z85) Handling/Trailering Suspension Package, . Not available with CK15953 Models, (Z71) Off-Road Suspension Package, or (NHT) VortecMax Performance Pack. Fleet and Government Orders are allowed with (Z71) Off-Road Suspension Package on CK15*03 and CK15753 Models.	A[1]	A[1]	--	A[2]	A[2]	A[2]
		Wheels, 4 - 17" x 7" (43.2 cm x 17.8 cm) 6-lug painted steel, includes painted center caps and steel spare	S	--	--	--	--	--
	PY9	**Wheels**, 4 - 17" x 7.5" (43.2 cm x 19.1 cm) 6-lug chrome-styled steel, includes chrome center caps and steel spare 1 - Upgradeable to (P25) 4 - 17" x 7.5" (43.2 cm x 19.1 cm) 6-lug polished cast aluminum wheels.	--	■	S	□[1]	□[1]	--
P25		**Wheels**, 4 - 17" x 7.5" (43.2 cm x 19.1 cm) 6-lug polished cast aluminum, includes steel spare	--	--	--	A	A	■
BTN		**2LS Crew Sport Package**, includes (QR9) 4 - 20" x 8.5" (50.8 cm x 21.6 cm) cast aluminum chromed 5-spoke wheels, (QSS) P275/55R20, touring, blackwall tires, and (ZAN) spare P265/70R17, blackwall tire	--	--	A	--	--	--

2007 Chevrolet Truck Silverado 1500 EXTERIOR
Classic

Free Flow RPO Code	Ref. Only RPO Code	Description 1 - Equipment Groups 1WT and 1LS available on CC15*03, CK15*03, CC15753, CK15753, CC15953 and CK15953 Models. 2 - Equipment Group 2LS available on C*15543 Models. 3 - Equipment Groups 1LT available on all models. 4 - Equipment Groups 2LT and 3LT available on CC15*53, CK15*53, and C*15543 Models.	Reg. and Ext. Cab		Crew Cab	Reg., Ext. and Crew Cab	Ext. and Crew Cab	
	-		Work Truck 1WT[1]	LS 1LS[1]	LS 2LS[2]	LT1 1LT[3]	LT2 2LT[4]	LT3 3LT[4]
	B71	**Wheel flares**, front and rear 1 - Included and only available with (Z71) Off-Road Suspension Package. Not available with (B2E) Silverado Limited Edition.	--	--	--	A[1]	A[1]	A[1]
R7D		**Wheel flares not desired** 1 - Requires (Z71) Suspension Package, Off-Road and (25U) Dark Blue Metallic, (41U) Black, (46U) Blue Granite Metallic, (63U) Sport Red Metallic, (74U) Victory Red or any SEO paints.	--	--	--	A[1]	A[1]	A[1]
		Wipers, front intermittent wet-arm with pulse washers	S	S	S	S	S	S

2007 Chevrolet Truck Silverado 1500 MECHANICAL
Classic

S = Standard Equipment A = Available -- (dashes) = Not Available D = ADI Available
■ = Included in Equipment Group □ = Included in Equipment Group but upgradeable

*Indicates availability of feature on multiple models. For example, it indicates feature availability on 2WD and 4WD Models or Rear wheel drive and All-wheel drive Models.

Codes listed in the shaded column titled Ref. Only RPO Code are for internal use only and should not be ordered.

Free Flow RPO Code	Ref. Only RPO Code	Description 1 - Equipment Groups 1WT and 1LS available on CC15*03, CK15*03, CC15753, CK15753, CC15953 and CK15953 Models. 2 - Equipment Group 2LS available on C*15543 Models. 3 - Equipment Groups 1LT available on all models. 4 - Equipment Groups 2LT and 3LT available on CC15*53, CK15*53, and C*15543 Models.	Reg. and Ext. Cab		Crew Cab	Reg., Ext. and Crew Cab	Ext. and Crew Cab	
			Work Truck 1WT[1]	LS 1LS[1]	LS 2LS[2]	LT1 1LT[3]	LT2 2LT[4]	LT3 3LT[4]
K47		**Air cleaner**, high-capacity 1 - Included with (Z82) heavy-duty trailering equipment or (VYU) Snow Plow Prep Package.	A[1]	A[1]	A[1]	A[1]	A[1]	A[1]
	KG3	**Alternator**, 145 amps	S	S	S	S	S	S
	KW1	**Alternator**, 160 amps 1 - Included and only available with (VYU) Snow Plow Prep Package.	A[1]	A[1]	--	A[1]	--	--
		Battery, heavy-duty 600 cold-cranking amps, maintenance-free with rundown protection and retained accessory power	S	S	S	S	S	S
		Brakes, 4-wheel antilock, front disc/rear drum	S	S	S	S	S	S
KNP		**Cooling**, auxiliary external transmission oil cooler, heavy-duty air-to-oil 1 - Requires (M30) 4-speed automatic transmission. Included with (Z82) heavy-duty, trailering equipment or (VYU) Snow Plow Prep Package.	A[1]	A[1]	A[1]	A[1]	A[1]	A[1]
G80		**Differential**, heavy-duty automatic locking rear	A	A	A	A	A	A
YF5		**Emissions**, California state requirements	A	A	A	A	A	A
FE9		**Emissions**, Federal requirements	A	A	A	A	A	A
NE1		**Emissions**, Maine, Massachusetts, New York or Vermont state requirements	A	A	A	A	A	A
NB8		**Emissions override**, California, Massachusetts or New York (for vehicles ordered by dealers in states of California, Massachusetts or New York with Federal emissions) 1 - Requires (FE9) Federal emissions requirements.	A[1]	A[1]	A[1]	A[1]	A[1]	A[1]
NC7		**Emissions override**, Federal (for vehicles ordered by dealers in Federal emission states with California, New York, Vermont, Massachusetts or Maine emissions; may also be used by dealers in states of California, New York, Vermont, Massachusetts or Maine to order different state-specific emissions) 1 - Requires (YF5) California state emissions requirements or (NE1) New York, Vermont, Massachusetts or Maine state emissions requirements.	A[1]	A[1]	A[1]	A[1]	A[1]	A[1]
K05		**Engine block heater**	A	A	A	A	A	A

Free Flow RPO Code	Ref. Only RPO Code	Description 1 - Equipment Groups 1WT and 1LS available on CC15*03, CK15*03, CC15753, CK15753, CC15953 and CK15953 Models. 2 - Equipment Group 2LS available on C*15543 Models. 3 - Equipment Groups 1LT available on all models. 4 - Equipment Groups 2LT and 3LT available on CC15*53, CK15*53, and C*15543 Models.	Reg. and Ext. Cab		Crew Cab	Reg., Ext. and Crew Cab	Ext. and Crew Cab	
			Work Truck 1WT[1]	LS 1LS[1]	LS 2LS[2]	LT1 1LT[3]	LT2 2LT[4]	LT3 3LT[4]
LU3		**Engine**, Vortec 4.3L V6 MFI (195 hp [145.4 kW] @ 4600 rpm, 260 lb-ft of torque [351.0 N-m] @ 2800 rpm) 1 - Required and standard on C*15703, C*15903 and CC15753 models only. Not available with (VYU) Snow Plow Prep Package or (Z82) heavy-duty, trailering equipment. 2 - Requires CC15753. With CC15753, only available with (PDJ) South-West LT Extended Cab Package or Fleet or Government order types.	A[1]	A[1]	--	A[2]	--	--
LR4		**Engine**, Vortec 4.8L V8 SFI (285 hp [212.3 kW] @ 5200 rpm, 295 lb-ft of torque [398.2 N-m] @ 4000 rpm) 1 - Standard on CK15753 models only. 2 - Not standard on C*15953 models. Not available with C*15543 or C*15553 models.	A[1]	A[1]	S	□[2]	--	--
LM7		**Engine**, Vortec 5.3L V8 SFI (295 hp [219.7 kW] @ 5200 rpm, 335 lb-ft of torque [452.3 N-m] @ 4000 rpm) 1 - Requires C*15703, C*159*3 or CC15753 Models and SEO (8B0) Batteries, 770 CCA with a 600 CCA auxiliary or SEO (8S3) Backup alarm. 2 - Not available with CK15753 Models. On C*15703, C*159*3 and CC15753 Models, requires (NW7) Traction assist system, electronic, SEO (8B0) Batteries, 770 CCA with a 600 CCA auxiliary or SEO (8S3) Backup alarm. 3 - Standard on C*15553 Models. Not available on CK15753 or C*15543 Models. On C*15703, C*159*3 and CC15753 Models, requires (ZX3) Suspension package, Ride-Control, (NW7) Traction assist system, electronic, SEO (8B0) Batteries, 770 CCA with a 600 CCA auxiliary or SEO (8S3) Backup alarm.	A[1]	A[2]	--	A[3]	A[3]	A[3]
L33		**Engine**, Vortec 5.3L V8 SFI, aluminum block with steel cylinder sleeves (310 hp [231.4 kW] @ 5200 rpm, 335 lb-ft of torque (452.3 N-m] @ 4000 rpm) 1 - Requires CK15753 models and included with (PDU) Light Duty Power Package.	A[1]	A[1]	--	A[1]	□[1]	□[1]
L59		**Engine**, Vortec 5.3L V8 SFI FlexFuel (295 hp [219.7 kW] @ 5200 rpm, 335 lb-ft of torque [452.3 N-m] @ 4000 rpm) 1 - Requires C*15*03, C*15543, C*15753 or C*15953 Models. - Standard on C*15953 and C*15543 Models. 2 - Requires C*15543, C*15753 or C*15953 Models. - Standard on CC15753, C*15543 and C*15953 Models.	A[1]	A[1]	--	A[1]	A[2]	A[2]
	LQ9	**Engine**, Vortec high-output 6.0L V8 SFI (345 hp [257.0 kW] @ 5200 rpm, 380 lb-ft of torque [513.0 N-m] @ 4000 rpm) 1 - Included and only available with (NHT) Vortec Max Performance Pack or (B4V) Silverado Performance Edition.	--	--	--	A[1]	A[1]	A[1]
		Exhaust, aluminized stainless-steel muffler and tailpipe	S	S	S	S	S	S
		Frame, hydroformed ladder-type	S	S	S	S	S	S

Free Flow RPO Code	Ref. Only RPO Code	Description 1 - Equipment Groups 1WT and 1LS available on CC15*03, CK15*03, CC15753, CK15753, CC15953 and CK15953 Models. 2 - Equipment Group 2LS available on C*15543 Models. 3 - Equipment Groups 1LT available on all models. 4 - Equipment Groups 2LT and 3LT available on CC15*53, CK15*53, and C*15543 Models.	Reg. and Ext. Cab		Crew Cab	Reg., Ext. and Crew Cab	Ext. and Crew Cab	
			Work Truck 1WT[1]	LS 1LS[1]	LS 2LS[2]	LT1 1LT[3]	LT2 2LT[4]	LT3 3LT[4]
	C5M	GVWR, 6100 lbs. (2767 kg) 1 - Requires CC15703 models.	S[1]	S[1]	--	S[1]	--	--
	Q4B	GVWR, 6200 lbs. (2812 kg) 1 - Requires CC15553 models or CC15753 models. Not available with CC15753 models and (LM7) Vortec 5.3L V8 SFI engine.	S[1]	S[1]	--	S[1]	S[1]	S[1]
	C7H	GVWR, 6400 lbs. (2903 kg) 1 - Requires C*15903, CK15703, CK15753, C*15953, or CK15553 models.	S[1]	S[1]	--	S[1]	S[1]	S[1]
	C7K	GVWR, 6500 lbs. (2948 kg) 1 - Requires CC15753 models and (LM7) Vortec 5.3L V8 SFI engine.	S[1]	S[1]	--	S[1]	S[1]	S[1]
	C3J	GVWR, 6700 lbs. (3039 kg) 1 - Requires CC15953 models and (LM7) Vortec 5.3L V8 SFI engine or CK15753 models and (L33) Vortec 5.3L V8 SFI engine.	S[1]	S[1]	--	S[1]	S[1]	S[1]
	C5U	GVWR, 6800 lbs. (3084 kg) 1 - Requires CC15543 models and (NHT) Vortec Max Performance Pack.	--	--	--	A[1]	A[1]	A[1]
	C5H	GVWR, 6900 lbs. (3130 kg) 1 - Requires CC15543 models or CK15953 models and (LM7) Vortec 5.3L V8 SFI engine. 2 - Requires CC15543 models.	S[1]	S[1]	S[2]	S[1]	S[1]	S[1]
	C5W	GVWR, 7000 lbs. (3175 kg) 1 - Requires CK15543 models.	--	--	S[1]	S[1]	S[1]	S[1]
PDU		**Light Duty Power Package**, includes (LM7) Vortec 5.3L V8 SFI engine, (L33) Vortec 5.3L V8 SFI engine or (L59) Vortec 5.3L V8 SFI FlexFuel engine, (G80) heavy-duty automatic locking differential and (Z82) heavy-duty trailering equipment 1 - Requires C*15*53 Extended Cab models. Not available with (Z83) Solid Smooth Ride Suspension Package. 2 - Not available with (Z83) Solid Smooth Ride Suspension Package. 3 - Not available with (Z83) Solid Smooth Ride Suspension Package. On C*15753 and C*15543 Models, requires (B2E) Silverado Limited Edition.	A[1]	A[2]	--	A[3]	A	A
R6Y		**Light Duty Power Package discount not desired** 1 - Not available with (B2E) Silverado Limited Edition.	A	A	--	A[1]	A[1]	A[1]

Free Flow RPO Code	Ref. Only RPO Code	Description 1 - Equipment Groups 1WT and 1LS available on CC15*03, CK15*03, CC15753, CK15753, CC15953 and CK15953 Models. 2 - Equipment Group 2LS available on C*15543 Models. 3 - Equipment Groups 1LT available on all models. 4 - Equipment Groups 2LT and 3LT available on CC15*53, CK15*53, and C*15543 Models.	Reg. and Ext. Cab		Crew Cab	Reg., Ext. and Crew Cab	Ext. and Crew Cab	
			Work Truck 1WT[1]	LS 1LS[1]	LS 2LS[2]	LT1 1LT[3]	LT2 2LT[4]	LT3 3LT[4]
NHT		**Vortec Max Performance Pack**, includes (LQ9) Vortec high-output 6.0L V8 engine with "Vortec Max" engine cover and door badge that reads "Vortec Max", (M70) 4-speed automatic super-duty transmission, (GT5) 4.10 rear axle ratio (includes (GT4) 3.73 rear axle ratio on CC15543 models), (G80) heavy-duty rear locking differential, (ZX3) Ride-Control Suspension Package, (KC4) external engine oil cooler, (KNP) auxiliary external transmission oil cooler and (Z82) heavy-duty trailering equipment 1 - Requires C*15753 or C*15543 models. Also, includes (NP8) electronic Autotrac transfer case on CK15753 and CK15543 models. Requires (P25) 4 - 17" x 7.5" (43.2 cm x 19.1 cm) 6-lug polished cast aluminum wheels, (QJM) P265/70R17 on-/off-road White outlined-letter tires or (QJP) P265/70R17 on-/off-road blackwall tires. Option content within this package may not be substituted or deleted. - Not available with (ZY2) two-tone paint, (NW7) electronic traction assist system, (Z71) Off-Road Suspension Package, (Z83) Solid Smooth Ride Suspension package, (Z85) Handling/Trailering Suspension Package or any (SEO) Special Equipment Options.	--	--	--	A[1]	A[1]	A[1]
GU5		**Rear axle**, 3.23 ratio 1 - Refer to Engine/Axle chart for availability. Standard on 2WD models only.	A[1]	A[1]	A[1]	A[1]	A[1]	A[1]
GU6		**Rear axle**, 3.42 ratio 1 - Refer to Engine/Axle chart for availability. Standard on 4x4 models only.	A[1]	A[1]	--	A[1]	A[1]	A[1]
GT4		**Rear axle**, 3.73 ratio 1 - Refer to Engine/Axle chart for availability. Requires Fleet and Government order types on 4x4 Regular and Extended Cab models unless (B2E) Silverado Special Edition is ordered. 2 - Requires 4x4 models.	A[1]	A[1]	A[2]	A[1]	A[1]	A[1]
GT5		**Rear axle**, 4.10 ratio 1 - Requires 4x4 models and (G80) heavy-duty automatic locking rear differential. Refer to Engine/Axle chart for availability.	A[1]	A[1]	--	A[1]	A[1]	A[1]

Free Flow RPO Code	Ref. Only RPO Code	Description 1 - Equipment Groups 1WT and 1LS available on CC15*03, CK15*03, CC15753, CK15753, CC15953 and CK15953 Models. 2 - Equipment Group 2LS available on C*15543 Models. 3 - Equipment Groups 1LT available on all models. 4 - Equipment Groups 2LT and 3LT available on CC15*53, CK15*53, and C*15543 Models.	Reg. and Ext. Cab		Crew Cab	Reg., Ext. and Crew Cab	Ext. and Crew Cab	
			Work Truck 1WT[1]	LS 1LS[1]	LS 2LS[2]	LT1 1LT[3]	LT2 2LT[4]	LT3 3LT[4]
B4V		**Silverado Performance Edition**, includes (LQ9) Vortec high-output 6.0L V8 engine with "Vortec Max" engine cover and door badge that reads "Vortec Max", (M32) 4-speed automatic heavy-duty transmission, (GT4) 3.73 rear axle ratio, High-Performance Suspension Package, (G80) heavy-duty, locking rear differential, (NW7) traction assist system, (KC4) engine oil cooler, (KNP) external transmission oil cooler, (Z82) heavy-duty trailering equipment, (UK3) steering-wheel mounted audio controls, (QR9) 4 - 20" x 8.5" 5-spoke chromed cast aluminum wheels, (QSS) P275/55R20 touring blackwall tires, (ZAN) P265/70R17 blackwall spare tire and 17" steel spare wheel 1 - Requires CC15753 models. Option content within this package may not be substituted or deleted. Not available with (Z85) Handling/Trailering Suspension Package, (ZY2) two-tone paint, (DPN) outside, heated, power-adjustable mirrors, (B2E) Silverado Limited Edition or any (SEO) Special Equipment Options.	--	--	--	A[1]	A[1]	A[1]
NZZ		**Skid Plate Package**, includes aluminum front underbody shield starting behind front bumper and running to first cross-member, protecting front underbody, oil pan, differential case and transfer case, frame-mounted shields 1 - Requires 4x4 models. Included with (Z71) Off-Road Suspension Package or (VYU) Snow Plow Prep Package. Not included with (Z71) Off-Road Suspension Package if (B2E) Sierra Special Edition is ordered. 2 - Requires 4x4 models.	A[1]	A[1]	A[2]	A[1]	A[1]	A[1]
VYU		**Snow Plow Prep Package**, includes 10-amp power for backup and roof emergency light, (KW1) 160-amp alternator, high-flow front bumper, roof beacon lamp provisions with switch on the instrument panel, forward lamp wiring harness, 1.65" (42 mm) access hole with grommet in front of dash panel, instrument panel jumper wiring harness for electric trailer brake controller, (K47) high-capacity air cleaner and (NZZ) Skid Plate Package 1 - Requires CK15*03 models. Not available with (ZX3) Ride-Control Suspension Package, (LU3) Vortec 4.3L V6 MFI engine, (LM7) Vortec 5.3L V8 SFI engine or (CJ2) dual-zone, automatic air conditioning. Also includes (KNP) auxiliary external transmission oil cooler when (M30) 4-speed automatic transmission is ordered.	A[1]	A[1]	--	A[1]	--	--
		Steering, power	S	S	S	S	S	S
		Suspension, front independent 1 - 2WD models include coil springs. 4x4 models include torsion bars.	S[1]	S[1]	S[1]	S[1]	S[1]	S[1]

Free Flow RPO Code	Ref. Only RPO Code	Description 1 - Equipment Groups 1WT and 1LS available on CC15*03, CK15*03, CC15753, CK15753, CC15953 and CK15953 Models. 2 - Equipment Group 2LS available on C*15543 Models. 3 - Equipment Groups 1LT available on all models. 4 - Equipment Groups 2LT and 3LT available on CC15*53, CK15*53, and C*15543 Models.	Reg. and Ext. Cab		Crew Cab	Reg., Ext. and Crew Cab	Ext. and Crew Cab	
			Work Truck 1WT[1]	LS 1LS[1]	LS 2LS[2]	LT1 1LT[3]	LT2 2LT[4]	LT3 3LT[4]
		Suspension, rear 2-stage multi-leaf springs, semi-elliptic 1 - Standard on Regular and Extended Cab models only.	S	S	--	S[1]	S[1]	S[1]
		Suspension, rear 3-stage springs 1 - Standard on Crew Cab models only.	--	--	S	S[1]	S[1]	S[1]
	Z83	**Suspension Package**, Solid Smooth Ride, includes 35 mm piston twin tube shocks 1 - Not available with (PDU) Light Duty Power Package. 2 - Requires C*15*03, C*15753 or C*15953 models	S[1]	S[1]	--	S[2]	--	--
Z85		**Suspension Package**, Handling/Trailering, includes 36 mm piston monotube shocks 1 - Standard on C*15553 and C*15543 models.	A	A	S	A[1]	■[1]	■[1]
Z71		**Suspension Package**, Off-Road, includes 1.81" (46 mm) shocks, off-road jounce bumpers, stabilizer bars, (B71) wheel flares, (NZZ) Skid Plate Package and Z71 decals on rear quarters 1 - Requires 4x4 models. Requires (PDX) Extended Cab Value Package, (PDZ) Crew Cab Value Package or (PDU) Light Duty Power Package and (QJM) P265/70R17 on-/off-road White outlined-letter tires or (QJP) P265/70R17 on-/off-road blackwall tires. Also available with (QXR) Tires, LT245/70R17 all-terrain, blackwall on Fleet and Government Orders on CK15*03 and CK15753 Models. If (B2E) Silverado Limited Edition is ordered with (Z71), 4WD (B2E) Silverado Limited Edition models build with code Z71 however Z71 used with B2E will NOT include: (B71) Wheel flares, (NZZ) Skid Plate Package, 1.81" Front shocks, 1.81" Rear shocks or Z71 Decals on Pickup Box.	--	--	--	A[1]	A[1]	A[1]
ZX3		**Suspension Package**, Ride-Control, manual-selectable, includes 2-position electronic control for shock setting and smooth-road/trailering 1 - Not available with (VYU) Snow Plow Prep Package or C*15553 Models or C*15543 Model unless (NHT) VortecMax Performance Pack is ordered. On C*15703, C*15903 and CC15753 Models not available with (L59) Vortec 5.3L V8 SFI FlexFuel engine, please select (LM7) Vortec 5.3L V8 SFI Engine if a 5.3L V8 is desired with this option.	--	--	--	A[1]	A[1]	A[1]

Free Flow RPO Code	Ref. Only RPO Code	Description 1 - Equipment Groups 1WT and 1LS available on CC15*03, CK15*03, CC15753, CK15753, CC15953 and CK15953 Models. 2 - Equipment Group 2LS available on C*15543 Models. 3 - Equipment Groups 1LT available on all models. 4 - Equipment Groups 2LT and 3LT available on CC15*53, CK15*53, and C*15543 Models.	Reg. and Ext. Cab		Crew Cab	Reg., Ext. and Crew Cab	Ext. and Crew Cab	
			Work Truck 1WT[1]	LS 1LS[1]	LS 2LS[2]	LT1 1LT[3]	LT2 2LT[4]	LT3 3LT[4]
NW7		**Traction assist system**, electronic 1 - Requires 2WD models, (G80) heavy-duty automatic locking rear differential and (M30) 4-speed automatic transmission. Not available with (LU3) Vortec 4.3L V6 MFI engine or (L59) Vortec 5.3L V8 SFI, Flexible Fuel engine. 2 - Requires 2WD models and (G80) heavy-duty automatic locking rear differential. Not available with (LU3) Vortec 4.3L V6 MFI engine or (L59) Vortec 5.3L V8 SFI, Flexible Fuel engine. 3 - Requires 2WD Models and (G80) heavy-duty automatic rear locking differential, - Not available with (B2E) Silverado Limited Edition, (NHT) VortecMax Performance Pack, (LU3) Vortec 4.3L V6 MFI engine. Not available with (L59) Vortec 5.3L V8 SFI Flexible Fuel engine, please select (LM7) Vortec 5.3L engine if a 5.3L V8 is desired with this option except on CC15543 Models. CC15543 Models require (L59) Vortec 5.3L V8 SFI Flexible Fuel engine.	--	A[1]	A[2]	A[3]	A[3]	A[3]
Z82		**Trailering equipment**, heavy-duty, includes trailering hitch platform, 7-wire harness (harness includes wires for: park lamps, backup lamps, right turn, left turn, electric brake lead, battery and ground) with independent fused trailering circuits mated to a 7-way sealed connector, instrument panel jumper wiring harness for electric trailer brake controller, and 1-way sealed connector for center high-mounted stop/brake lamp, (K47) high-capacity air cleaner and (KNP) external transmission oil cooler 1 - Requires (M30) 4-speed automatic transmission or (M70) super-duty, 4-speed automatic transmission. Not available with (LU3) Vortec 4.3L V6 MFI engine or (Z83) Solid Smooth Ride Suspension Package.	A[1]	A[1]	A	A[1]	A[1]	A[1]
UY2		**Trailering wiring provisions**, for camper, fifth wheel and gooseneck trailer, includes additional 8-way wiring harness routed to front of pickup box and added 7-way sealed connector for the trailer harness 1 - Requires (Z82) heavy-duty, trailering equipment. Not available with C*15543 or C*15553 models.	A[1]	A[1]	--	A[1]	A[1]	A[1]
	NP2	**Transfer case**, floor-mounted shifter 1 - Standard with 4x4 Regular and Extended Cab models only. 2 - Requires 4x4 models.	S[1]	S[1]	S[2]	S[1]	--	--
NP8		**Transfer case**, electronic Autotrac with push-button controls 1 - Requires 4WD Models. - Standard on 4WD Crew Cab Models only. Required when (A95) front reclining buckets seats are ordered on Fleet and Government order types. 2 - Requires 4x4 models. Standard on 4x4 Crew Cab models only.	--	--	--	A[1]	■[2]	■[2]

2007 Chevrolet Truck Silverado 1500 MECHANICAL Classic

Free Flow RPO Code	Ref. Only RPO Code	Description 1 - Equipment Groups 1WT and 1LS available on CC15*03, CK15*03, CC15753, CK15753, CC15953 and CK15953 Models. 2 - Equipment Group 2LS available on C*15543 Models. 3 - Equipment Groups 1LT available on all models. 4 - Equipment Groups 2LT and 3LT available on CC15*53, CK15*53, and C*15543 Models.	Reg. and Ext. Cab		Crew Cab	Reg., Ext. and Crew Cab	Ext. and Crew Cab	
			Work Truck 1WT[1]	LS 1LS[1]	LS 2LS[2]	LT1 1LT[3]	LT2 2LT[4]	LT3 3LT[4]
	MG5	Transmission, 5-speed manual with overdrive 1 - Requires Regular Cab models and (LU3) Vortec 4.3L V6 MFI engine.	S[1]	S[1]	--	--	--	--
M30		Transmission, 4-speed automatic, electronically controlled with overdrive and tow/haul mode 1 - Standard on Extended Cab models only.	A[1]	A[1]	S	S	S	S
	M70	Transmission, 4-speed automatic, super-duty 1 - Included and only available with (NHT) Vortec Max Performance Pack.	--	--	--	A[1]	A[1]	A[1]

2007 Chevrolet Truck Silverado 1500 ENGINE/AXLE - Regular Cab Classic

S = Standard Equipment A = Available -- (dashes) = Not Available
■ = Included in Equipment Group □ = Included in Equipment Group but upgradeable

*Indicates availability of feature on multiple models. For example, it indicates feature availability on 2WD and 4WD Models or Rear wheel drive and All-wheel drive Models.

		Transmissions		Axles				GVWR lbs. (kg)	
Model	Engine	MG5 5-Speed Manual with OD	M30 4-Speed Automatic with OD	GU5 3.23	GU6 3.42	GT4 3.73	GT5 4.10	C5M 6100 (2767)	C7H 6400 (2903)
CC15703	LU3 Vortec 4.3L V6 MFI	S	A	S	--	--	--	S	--
	LR4 Vortec 4.8L V8 SFI	--	A	S	--	A	--	S	--
	LM7 Vortec 5.3L V8 SFI[4]	--	A	S	--	A	--	S	--
	L59 Vortec 5.3L V8 SFI FlexFuel	--	A	S	--	A	--	S	--
CC15903	LU3 Vortec 4.3L V6 MFI	S	A	S	--	--	--	--	S
	LR4 Vortec 4.8L V8 SFI	--	A	S	--	A	--	--	S
	LM7 Vortec 5.3L V8 SFI[4]	--	A	S	--	A	--	--	S
	L59 Vortec 5.3L V8 SFI FlexFuel	--	A	S	--	A	--	--	S
CK15703	LU3 Vortec 4.3L V6 MFI	S	A	--	--	A[1]	--	--	S
	LR4 Vortec 4.8L V8 SFI	--	A	--	A	A[3]	A[2]	--	S
	LM7 Vortec 5.3L V8 SFI[5]	--	A	--	A	A[3]	A[2]	--	S
	L59 Vortec 5.3L V8 SFI FlexFuel	--	S	--	A	A[3]	A[2]	--	S
CK15903	LU3 Vortec 4.3L V6 MFI	S	A	--	--	A[1]	--	--	S
	LR4 Vortec 4.8L V8 SFI	--	A	--	A	A[3]	A[2]	--	S
	LM7 Vortec 5.3L V8 SFI[5]	--	A	--	A	A[3]	A[2]	--	S
	L59 Vortec 5.3L V8 SFI FlexFuel	--	S	--	A	A[3]	A[2]	--	S

1 - Standard and required on CK15*03 with (LU3) Engine.
2 - Requires (G80) heavy-duty automatic locking rear differential.

Model	Engine	Transmissions		Axles				GVWR lbs. (kg)	
		MG5 5-Speed Manual with OD	M30 4-Speed Automatic with OD	GU5 3.23	GU6 3.42	GT4 3.73	GT5 4.10	C5M 6100 (2767)	C7H 6400 (2903)
3 - Requires Fleet or Government Order Types.									
4 - Requires (NW7) electronic traction assist system or (ZX3) Ride-Control suspension package.									
5 - Requires (ZX3) Ride-Control suspension package.									

S = Standard Equipment A = Available – (dashes) = Not Available

■ = Included in Equipment Group □ = Included in Equipment Group but upgradeable

*Indicates availability of feature on multiple models. For example, it indicates feature availability on 2WD and 4WD Models or Rear wheel drive and All-wheel drive Models.

Model	Engine	Transmissions		Axles				GVWR lbs. (kg)				
		M30 4-Speed Automatic with OD	M70 4-speed automatic	GU5 3.23	GU6 3.42	GT4 3.73	GT5 4.10	Q4B 6200 (2812)	C7H 6400 (2903)	C7K 6500 (2948)	C3J 6700 (3039)	C5H 6900 (3130)
CC15553	LM7 Vortec 5.3L V8 SFI	S	--	S	--	A	--	S	--	--	--	--
CC15753	LU3 Vortec 4.3L V6 MFI	S	--	S	--	A	--	S	--	--	--	--
	LR4 Vortec 4.8L V8 SFI	S	--	S	--	A	--	S	--	--	--	--
	LM7 Vortec 5.3L V8 SFI[4]	S	--	S	--	A	--	--	--	S	--	--
	L59 Vortec 5.3L V8 SFI FlexFuel	S	--	S	--	A	--	S	--	--	--	--
	LQ9 Vortec high-output 6.0L V8 SFI[3]	--	A[3]	--	--	--	A[3]	A[3]	--	--	--	--
CC15953	LR4 Vortec 4.8L V8 SFI	S	--	S	--	A	--	--	S	--	--	--
	LM7 Vortec 5.3L V8 SFI[4]	S	--	S	--	A	--	--	--	--	S	--
	L59 Vortec 5.3L V8 SFI FlexFuel	S	--	S	--	A	--	--	S	--	--	--
CK15553	LM7 Vortec 5.3L V8 SFI	S	--	--	S	A[2]	A[1]	--	S	--	--	--
CK15753	LR4 Vortec 4.8L V8 SFI	S	--	--	S	A[2]	A[1]	--	S	--	--	--
	L33 Vortec 5.3L V8 SFI	S	--	--	S	A[2]	A[1]	--	--	--	S	--
	L59 Vortec 5.3L V8 SFI FlexFuel	S	--	--	S	A[2]	A[1]	--	S	--	--	--
	LQ9 Vortec high-output 6.0L V8 SFI[3]	--	A[3]	--	--	--	A[3]	--	A[3]	--	--	--

		Transmissions		Axles				GVWR lbs. (kg)				
Model	Engine	M30 4-Speed Automatic with OD	M70 4-speed automatic	GU5 3.23	GU6 3.42	GT4 3.73	GT5 4.10	Q4B 6200 (2812)	C7H 6400 (2903)	C7K 6500 (2948)	C3J 6700 (3039)	C5H 6900 (3130)
CK15953	LR4 Vortec 4.8L V8 SFI	S	--	--	S	A[2]	A[1]	--	S	--	--	--
	LM7 Vortec 5.3L V8 SFI[5]	S	--	--	S	A[2]	A[1]	--	--	--	--	S
	L59 Vortec 5.3L V8 SFI FlexFuel	S	--	--	S	A[2]	A[1]	--	S	--	--	--

1 - Requires (G80) heavy-duty automatic locking rear differential.
2 - Requires Fleet or Government Order Types.
3 - Requires (NHT) VortecMax Performance Pack.
4 - Requires (NW7) electronic traction assist system or (ZX3) Ride-Control suspension package.
5 - Requires (ZX3) Ride-Control suspension package.

2007 Chevrolet Truck Silverado 1500 Classic ENGINE/AXLE - Crew Cab

S = Standard Equipment A = Available -- (dashes) = Not Available
■ = Included in Equipment Group □ = Included in Equipment Group but upgradeable

*Indicates availability of feature on multiple models. For example, it indicates feature availability on 2WD and 4WD Models or Rear wheel drive and All-wheel drive Models.

		Transmissions		Axles				GVWR lbs. (kg)		
Model	Engine	M30 4-Speed Automatic with OD	M70 4-speed automatic	GU5 3.23	GU6 3.42	GT4 3.73	GT5 4.10	C5U 6800 (3084)	C5H 6900 (3130)	C5W 7000 (3175)
CC15543	LR4 Vortec 4.8L V8 SFI	S	--	S	--	--	--	--	S	--
	L59 Vortec 5.3L V8 SFI FlexFuel	S	--	S	--	A	--	--	S	--
	LQ9 Vortec high-output 6.0L V8 SFI[2]	--	A[2]	--	--	A	--	A	--	--
CK15543	LR4 Vortec 4.8L V8 SFI	S	--	--	--	S	--	--	--	S
	L59 Vortec 5.3L V8 SFI FlexFuel	S	--	--	S	A	A[1]	--	--	S
	LQ9 Vortec high-output 6.0L V8 SFI[2]	--	A[2]	--	--	--	A[2]	--	--	S

1 - Requires (G80) heavy-duty automatic locking rear differential.
2 - Requires (NHT) VortecMax Performance Pack.

2007 Chevrolet Truck Silverado 1500 Classic — COLOR AND TRIM - SOLID PAINT ZY1

S = Standard Equipment A = Available -- (dashes) = Not Available
■ = Included in Equipment Group □ = Included in Equipment Group but upgradeable

*Indicates availability of feature on multiple models. For example, it indicates feature availability on 2WD and 4WD Models or Rear wheel drive and All-wheel drive Models.

Decor Level	Seat Type	Seat Code	Seat Trim	Interior		
				Tan	Dark Charcoal	Medium Gray
Work Truck/ LS	Front 40/20/40 split-bench without fold-down armrest	AE7	Vinyl	52V	69V	--
Work Truck/ LS	Front 40/20/40 split-bench without fold-down armrest	AE7	Cloth	52C	69C	--
Work Truck/ LS/ LT1	Front 40/20/40 reclining split-bench with fold-down armrest	AE7	Custom Cloth	52D	69D	--
LT1	Front 40/20/40 reclining split-bench with fold-down armrest	AE7	Custom Leather seating surfaces	522	692	922
LT1/ LT2	Front power reclining buckets	A95[1]	Custom Cloth	52D	69D	--
LT1/ LT2	Front power reclining buckets	A95[1]	Custom Leather seating surfaces	522	692	922
LT3	Front power reclining full-feature buckets	AN3	Custom Leather seating surfaces	522	692	922

Exterior Solid Paint	Color Code	Touch Up Paint Number	Interior			Bodyside Molding Color (is also wheel flare color when option B71 is ordered)[2]
			Tan	Dark Charcoal	Medium Gray	
Sandstone Metallic	15U	WA-929L	A	A	A	Sandstone Metallic
Graystone Metallic	16U	WA-213M	A	A	A	Graystone Metallic
Dark Blue Metallic	25U	WA-722J	A	A	A	Black
Black	41U	WA-8555	A	A	A	Black
Blue Granite Metallic	46U	WA-928L	A	A	A	Black
Dark Green Metallic	47U	WA-9539	A	A	A	Dark Green Metallic
Summit White	50U	WA-8624	A	A	A	Summit White
Silver Birch Metallic	59U	WA-926L	--	A	A	Silver Birch Metallic
Sport Red Metallic[3]	63U	WA-817K	A	A	A	Black
Victory Red	74U	WA-9260	A	A	A	Black

1 - LT1 requires Fleet or Government order types.
2 - Requires (B71) Wheel flares, front and rear.
3 - Requires LT1, LT2, LT3 or Crew Cab LS Models.

2007 Chevrolet Truck Silverado 1500 Classic — COLOR AND TRIM - TWO-TONE PAINT ZY2

S = Standard Equipment A = Available -- (dashes) = Not Available
■ = Included in Equipment Group □ = Included in Equipment Group but upgradeable

*Indicates availability of feature on multiple models. For example, it indicates feature availability on 2WD and 4WD Models or Rear wheel drive and All-wheel drive Models.

Decor Level	Seat Type	Seat Code	Seat Trim	Interior	
				Dark Charcoal	Medium Gray
LT1	Front 40/20/40 reclining split-bench with fold-down armrest	AE7	Custom Cloth	69D	--
LT1	Front 40/20/40 reclining split-bench with fold-down armrest	AE7	Custom Leather seating surfaces	692	922
LT1/ LT2	Front power reclining buckets	A95[1]	Custom Cloth	69D	--
LT1/ LT2	Front power reclining buckets	A95[1]	Custom Leather seating surfaces	692	922
LT3	Front power reclining full-feature buckets	AN3	Custom Leather seating surfaces	692	922

Exterior Two Tone Paint	Upper Color Code	Touch Up Paint Number	Lower Color Code	Touch Up Paint Number	Interior		Bodyside Molding Color (is also wheel flare color when option B71 is ordered)[2]
					Dark Charcoal	Medium Gray	
Dark Blue Metallic / Silver Birch Metallic	25U	WA-722J	59L	WA-926L	A	A	Silver Birch Metallic
Black / Silver Birch Metallic	41U	WA-8555	59L	WA-926L	A	A	Silver Birch Metallic
Blue Granite Metallic / Silver Birch Metallic	46U	WA-928L	59L	WA-926L	A	A	Silver Birch Metallic
Dark Green Metallic / Silver Birch Metallic	47U	WA-9539	59L	WA-926L	A	A	Silver Birch Metallic
Summit White / Silver Birch Metallic	50U	WA-8624	59L	WA-926L	A	A	Silver Birch Metallic
Silver Birch Metallic / Graystone Metallic	59U	WA-926L	16L	WA-213M	A	A	Graystone Metallic
Victory Red / Silver Birch Metallic	74U	WA-9260	59L	WA-926L	A	A	Silver Birch Metallic

Requires C*15753 or C*15553 Models.
1 - LT1 requires Fleet or Government order types.
2 - Requires (B71) Wheel flares, front and rear.

S = Standard Equipment A = Available – (dashes) = Not Available
■ = Included in Equipment Group □ = Included in Equipment Group but upgradeable

*Indicates availability of feature on multiple models. For example, it indicates feature availability on 2WD and 4WD Models or Rear wheel drive and All-wheel drive Models.

Decor Level	Seat Type	Seat Code	Seat Trim	Interior		
				Tan	Dark Charcoal	Medium Gray
Work Truck/ LS	Front 40/20/40 split-bench without fold-down armrest	AE7	Vinyl	52V	69V	--
Work Truck/ LS	Front 40/20/40 split-bench without fold-down armrest	AE7	Cloth	52C	69C	--
Work Truck/ LS/ LT1	Front 40/20/40 reclining split-bench with fold-down armrest	AE7	Custom Cloth	52D	69D	--
LT1	40/20/40 reclining split-bench with fold-down armrest	AE7	Custom Leather seating surfaces	522	692	922
LT1/ LT2	Front power reclining buckets	A95[1]	Custom Cloth	52D	69D	--
LT1/ LT2	Front power reclining buckets	A95[1]	Custom Leather seating surfaces	522	692	922
LT3	Front power reclining full-feature buckets	AN3	Custom Leather seating surfaces	522	692	922

Exterior Solid Paint	Color Code	Touch Up Paint Number	Interior		
			Tan	Dark Charcoal	Medium Gray
Yellow	none	WA-5248	A	A	A
Blue Metallic	none	WA-5405	A	A	A
Yellow	none	WA-5445	A	A	A
Yellow	none	WA-5456	A	A	A
Blue	none	WA-5663	A	A	A
Green	none	WA-5758	A	A	A
Green - Low Gloss	none	WA-6237	A	A	A
Tan - Low Gloss	none	WA-6238	A	A	A
Blue	none	WA-7154	A	A	A
Blue Metallic	none	WA-7159	A	A	A
Gray Metallic	none	WA-7840	A	A	A
Green	none	WA-7941	A	A	A
Green, Woodland	9V5	WA-9015	A	A	A
Doeskin Tan	9V9	WA-9403	A	A	A
Orange	none	WA-9408	A	A	A

Yellow	none	WA-9414	A	A	A
Tangier Orange	9W4	WA-9417	A	A	A
Orange	none	WA-9419	A	A	A
Indigo Blue	none	WA-9792	A	A	A
NEW! Brown	none	WA-195E	A	A	A
Light Autumnwood Metallic	none	WA-228A	A	A	A
Wheatland Yellow	9W3	WA-253A	A	A	A
Dark Toreador Red	none	WA-334D	A	A	A
Pewter	none	WA-382E	A	A	A
Blue	none	WA-769H	A	A	A
Orange	none	WA-770H	A	A	A
NEW! Arrival Blue	none	WA-815K	A	A	A
NEW! Blue	none	WA-454N	A	A	A

All wheel flares, mirrors, body side moldings, door handles, bumpers and fascia will be Black.
All SEO Special Paints are not available on Models C/K15753 and C/K15543.
1500HD Model Displayed
1 - LT1 requires Fleet or Government order types.

S = Standard Equipment A = Available – (dashes) = Not Available D = ADI Available
■ = Included in Equipment Group □ = Included in Equipment Group but upgradeable

*Indicates availability of feature on multiple models. For example, it indicates feature availability on 2WD and 4WD Models or Rear wheel drive and All-wheel drive Models.

Codes listed in the shaded column titled Ref. Only RPO Code are for internal use only and should not be ordered.

Free Flow RPO Code	Ref. Only RPO Code	Description 1 - Equipment Groups 1WT and 1LS available on CC15*03, CK15*03, CC15753, CK15753, CC15953 and CK15953 Models. 2 - Equipment Group 2LS available on C*15543 Models. 3 - Equipment Groups 1LT available on all models. 4 - Equipment Groups 2LT and 3LT available on CC15*53, CK15*53, and C*15543 Models.	Reg. and Ext. Cab		Crew Cab	Reg., Ext. and Crew Cab	Ext. and Crew Cab	
			Work Truck 1WT[1]	LS 1LS[1]	LS 2LS[2]	LT1 1LT[3]	LT2 2LT[4]	LT3 3LT[4]
		Interior						
6C7		**Console, roof with reading lamps (MSRP = $55.00)** Provides a short interior roof console with spot reading lamps and up-level headliner.	A	A	--	--	--	--
5B5		**Power windows and mirrors (MSRP = $738.00)** Provides power driver and passenger front side windows on a base trim level, includes SEO (5M1), LH and RH outside power adjustable, manual folding, non-heated, non-extendable mirrors and up level door panels. The mirror head is the same size and configuration as the base power mirror on LT Décor. **1 - Requires RPO (AU3) power door locks. Power mirrors can be upgraded to SEO (6P3) outside, power-adjustable, power extendable, camper mirrors.**	A[1]	A[1]	--	--	--	--
9U4		**Remote keyless entry (MSRP = $170.00)** Provides remote keyless entry on LS Décor or Work Truck Décor pick-up trucks. Includes two transmitters, and deletes the lock cylinder on the right hand door. **1 - Requires RPO (AU3) power door locks and SEO (5B5) power windows and mirrors. Not available with models C*15543 or uplevel décors.**	A[1]	A[1]	--	--	--	--
9U3		**Seats, cloth bucket (MSRP = No Charge) with Work Truck and (MSRP = -$282.00) with LS Decor** Driver and passenger front individual seats in cloth trim derived from a 40/20/40 split-bench with center "20" section removed. Seats are manual, not power. Does not include a floor or roof console or manual lumbar. Cloth rear seat matching the front seats will be provided on extended models. **1 - Requires Trim codes (69C) Dark Charcoal or (52C) Neutral. Not available with RPO (AG1) 6-way power driver seat adjuster.**	A[1]	A[1]	--	--	--	--

Free Flow RPO Code	Ref. Only RPO Code	Description 1 - Equipment Groups 1WT and 1LS available on CC15*03, CK15*03, CC15753, CK15753, CC15953 and CK15953 Models. 2 - Equipment Group 2LS available on C*15543 Models. 3 - Equipment Groups 1LT available on all models. 4 - Equipment Groups 2LT and 3LT available on CC15*53, CK15*53, and C*15543 Models.	Reg. and Ext. Cab		Crew Cab	Reg., Ext. and Crew Cab	Ext. and Crew Cab	
			Work Truck 1WT[1]	LS 1LS[1]	LS 2LS[2]	LT1 1LT[3]	LT2 2LT[4]	LT3 3LT[4]
9S1		**Seats, vinyl bucket (MSRP = No Charge) with Work Truck and (MSRP = -$282.00) with LS Decor** Driver and passenger front individual seats in vinyl trim (derived from AE7) 40/20/40 Split Bench with center "20" section removed. Does not include manual lumbar. Seats are manual, not power. Does not include a floor or roof console. Standard vinyl rear seat with trim matching front seats will be provided on Extended Cabs. **1 - Requires Trim codes (69V) Dark Charcoal or (52V) Neutral. Not available with RPO (AG1) 6-way power driver seat adjuster.**	A[1]	A[1]	--	--	--	--
9R3		**Sound system, delete (MSRP = No Charge)** Deletes the base sound system and provides a stowage compartment and a driver alert chime-tone module. Retains the antenna and base speaker system. **1 - Requires a Fleet order type.**	A[1]	A[1]	--	--	--	--
9R0		**Sound system, ETR AM/FM stereo with cassette (MSRP = $150.00) with Work Truck and (MSRP = No Charge) with LS or LT1 Decor** AM/FM stereo with cassette and digital clock, no CD player. Replaces the base radio. **1 - Requires a Fleet or Government order type.** **2 - Requires a Fleet or Government sales order. Not available on models C*15543 and not available with RPO (UK3) steering-wheel mounted audio controls, (UE1) OnStar or (PDB) OnStar Plus Package. Requires RPO (AE7) front 40/20/40 split-bench seat on 1LT.**	A[1]	A[1]	--	A[2]	--	--
		Exterior						
8S3		**Backup alarm (MSRP = $103.00)** 97 decibels back-up alarm. **1 - Requires RPO (Z83) Solid Smooth Ride Suspension Package, RPO (Z71) Off-Road Suspension Package, or RPO (Z85) Handling/Trailering Suspension Package. Not available on models C*15543 or C*15553. Not available with RPO (ZX3) Ride-Control Suspension Package, or RPO (L59) Vortec 5.3L V8 SFI, Flexible Fuel engine on models C*15953.**	A[1]	A[1]	--	A[1]	A[1]	A[1]
8E9		**Bumper, front, painted White (MSRP = $45.00)** Provides a White painted front bumper in lieu of standard chrome. **1 - Not available with RPO (VB3) rear chrome step bumper.**	A[1]	--	--	--	--	--

Free Flow RPO Code	Ref. Only RPO Code	Description 1 - Equipment Groups 1WT and 1LS available on CC15*03, CK15*03, CC15753, CK15753, CC15953 and CK15953 Models. 2 - Equipment Group 2LS available on C*15543 Models. 3 - Equipment Groups 1LT available on all models. 4 - Equipment Groups 2LT and 3LT available on CC15*53, CK15*53, and C*15543 Models.	Reg. and Ext. Cab		Crew Cab	Reg., Ext. and Crew Cab	Ext. and Crew Cab	
			Work Truck 1WT[1]	LS 1LS[1]	LS 2LS[2]	LT1 1LT[3]	LT2 2LT[4]	LT3 3LT[4]
6P3		**Camper Mirrors, power adjustable glass, manual extendable, non-heated (MSRP = $238.00)** Alternative mirrors replacing mirrors that are standard with SEO 5B5 Power windows and mirrors on a base decor truck. Right and left hand outside mirrors consisting of 50 square inch flat mirror surface positioned over a 20 square inch convex mirror surface with a common head. Includes turn signals in mirror glass. 1 - Requires that RPO (AU3) power door locks and SEO (5B5) power windows and mirrors must be ordered and priced in addition to SEO (6P3).	A[1]	A[1]	--	--	--	--
9R1		**Decal delete, Pickup bed (MSRP = No Charge)** Deletes the decals from the side of the Pickup bed on 4x4 Pickup trucks. 1 - Requires models CK15*03 or CK15*53. Not available with SEO (8F2) ornamentation delete.	A[1]	A[1]	--	A[1]	A[1]	A[1]
9M4		**Decal delete, tailgate (MSRP = No Charge)** Deletes decal on tailgate of the Pick-up bed. 1 - Requires RPO (E63) Fleetside pickup box. Not available with SEO (8F2) ornamentation delete.	A[1]	A[1]	--	--	--	--
8V2		**Jack and tools delete (MSRP = -$32.00 Credit)** Deletes the jack and tire change tools that are standard. 1 - Requires a Fleet or Government order type. Not available on models C*15543.	A[1]	A[1]	--	A[1]	A[1]	A[1]
8X1		**Label, fasten safety belts (MSRP = $2.00)** "Fasten Safety Belts" reminder label on side door window glass.	A	A	A	A	A	A
	5M1	**Mirror, exterior, power adjustable, manual folding, non-heated and non-extendable (MSRP = No Charge)** Provides the left and right hand side outside power adjustable, manual folding, non-heated, non-extendable, rear view mirrors that are included with SEO (5B5) Power windows and mirrors. Mirror head is the same size and configuration as the base mirror supplied on first tire Uplevel Décors except that the mirror head is not heated and not extendable. 1 - Included and only available with SEO (5B5) power windows and mirrors.	A[1]	A[1]	--	--	--	--

Free Flow RPO Code	Ref. Only RPO Code	Description 1 - Equipment Groups 1WT and 1LS available on CC15*03, CK15*03, CC15753, CK15753, CC15953 and CK15953 Models. 2 - Equipment Group 2LS available on C*15543 Models. 3 - Equipment Groups 1LT available on all models. 4 - Equipment Groups 2LT and 3LT available on CC15*53, CK15*53, and C*15543 Models.	Reg. and Ext. Cab		Crew Cab	Reg., Ext. and Crew Cab	Ext. and Crew Cab	
			Work Truck 1WT[1]	LS 1LS[1]	LS 2LS[2]	LT1 1LT[3]	LT2 2LT[4]	LT3 3LT[4]
8F2		**Ornamentation, delete (MSRP = No Charge)** Upfitter option. Deletes decals and nameplates on truck exterior. 1 - Requires Upfitter order type.	A[1]	--	--	--	--	--
9V9		**Paints, solid (MSRP = No Charge),** Doeskin Tan 1 - Requires SEO (TGK) solid paint. Not available on models C*15543.	A[1]	A[1]	--	A[1]	A[1]	A[1]
9W4		**Paints, solid (MSRP = No Charge),** Tangier Orange 1 - Requires SEO (TGK) solid paint. Not available on models C*15543.	A[1]	A[1]	--	A[1]	A[1]	A[1]
9W3		**Paints, solid (MSRP = No Charge),** Wheatland Yellow 1 - Requires SEO (TGK) solid paint. Not available on models C*15543.	A[1]	A[1]	--	A[1]	A[1]	A[1]
9V5		**Paints, solid (MSRP = No Charge),** Woodland Green 1 - Requires SEO (TGK) solid paint. Not available on models C*15543.	A[1]	A[1]	--	A[1]	A[1]	A[1]
5Y0		**Provision for body mounted lamp with hook-up wiring (MSRP = $88.00)** Provides an instrument panel mounted switch and electrical hook-up behind the cab for a body upfitter to connect a body mounted warning or emergency lamp. 21 amp nominal rating. 1 - Requires RPO (AE7) front 40/20/40 split-bench seat or RPO (A95) front bucket seats, RPO (Z83) Solid Smooth Ride Suspension Package, RPO (Z85) Handling/Trailering Suspension Package, or RPO (Z71) Off-Road Suspension Package. Not available with RPO (ZX3) Ride-Control Suspension Package, RPO (VYU) Snow Plow Prep Package, SEO (5G4) provision for cab roof-mounted lamp, SEO (5X7) provision for body-mounted warning lamp, or RPO (MG5) 5-speed manual transmission. Not available on models C*15543. Not available with RPO (L59) Vortec 5.3L V8 SFI, Flexible Fuel engine on models C*15953 or with RPO (NHT) VortecMax Performance Pack.	A[1]	A[1]	--	A[1]	--	--

Free Flow RPO Code	Ref. Only RPO Code	Description 1 - Equipment Groups 1WT and 1LS available on CC15*03, CK15*03, CC15753, CK15753, CC15953 and CK15953 Models. 2 - Equipment Group 2LS available on C*15543 Models. 3 - Equipment Groups 1LT available on all models. 4 - Equipment Groups 2LT and 3LT available on CC15*53, CK15*53, and C*15543 Models.	Reg. and Ext. Cab		Crew Cab	Reg., Ext. and Crew Cab	Ext. and Crew Cab	
			Work Truck 1WT[1]	LS 1LS[1]	LS 2LS[2]	LT1 1LT[3]	LT2 2LT[4]	LT3 3LT[4]
5X7		**Provision for body mounted warning lamp (MSRP = $98.00)** Provides an instrument panel mounted switch and heavy duty electrical relay with hook-up terminal in the engine compartment for a body upfitter to connect a body mounted warning or emergency lamp. 40 amp nominal rating. 1 - Requires RPO (Z83) Solid Smooth Ride Suspension Package, RPO (Z85) Handling/Trailering Suspension Package, or RPO (Z71) Off-Road Suspension Package. Not available with RPO (ZX3) Ride-Control Suspension Package, SEO (BB0) 770 cold-cranking-amp battery with a 600 cold-cranking-amp auxiliary battery, RPO (VYU) Snow Plow Prep Package, SEO (5G4) provision for cab roof-mounted lamp, SEO (5Y0) provision for body mounted-lamp with hook-up wiring or RPO (L59) Vortec 5.3L V8 SFI, Flexible Fuel engine on model C*15953. Not available on models C*15543 and C*15553 or with RPO (MG5) 5-speed manual transmission or with RPO (NHT) VortecMax Performance Pack.	A[1]	A[1]	--	A[1]	A[1]	A[1]
5G4		**Provision for cab roof-mounted lamp (MSRP = $103.00)** Instrument panel mounted switch and wiring to the roof of the cab for body upfitter to install and connect a cab roof mounted warning or emergency lamp. 21 amp nominal rating. Circuit access instructions are furnished. 1 - Requires RPO (Z83) Solid Smooth Ride Suspension Package, RPO (Z85) Handling/Trailering Suspension Package, or RPO (Z71) Off-Road Suspension Package. Not available with RPO (ZX3) Ride-Control Suspension Package, RPO (VYU) Snow Plow Prep Package, RPO (UE1) OnStar, 1-year of Safe & Sound service, SEO (5X7) provision for body-mounted warning lamp, SEO (5Y0) provision for body-mounted lamp with hook-up wiring or RPO (CF5) power sunroof. Not available on models C*15543.	A[1]	A[1]	--	A[1]	--	--
TGK		**Solid Paint** SEO solid paint, one color 1 - Required with any SEO paint selection. May require an extended lead time. Not available on model C*15543.	A[1]	A[1]	--	A[1]	A[1]	A[1]
9L3		**Spare tire delete (MSRP = -$45.00 Credit)** Deletes the spare tire only. Spare wheel and carrier remain. 1 - Not available with RPO (B4V) Performance Engine Package on model C15753. Not available on models C*15543.	A[1]	A[1]	--	A[1]	A[1]	A[1]

Free Flow RPO Code	Ref. Only RPO Code	Description 1 - Equipment Groups 1WT and 1LS available on CC15*03, CK15*03, CC15753, CK15753, CC15953 and CK15953 Models. 2 - Equipment Group 2LS available on C*15543 Models. 3 - Equipment Groups 1LT available on all models. 4 - Equipment Groups 2LT and 3LT available on CC15*53, CK15*53, and C*15543 Models.	Reg. and Ext. Cab		Crew Cab	Reg., Ext. and Crew Cab	Ext. and Crew Cab	
			Work Truck 1WT[1]	LS 1LS[1]	LS 2LS[2]	LT1 1LT[3]	LT2 2LT[4]	LT3 3LT[4]
5Z4		**Spare wheel and tire delete (MSRP = -$110.00 Credit)** Deletes the spare tire, wheel and carrier that are base equipment. 1 - Requires RPO (E63) Fleetside pickup box. Not available with RPO (SAF) spare tire lock or RPO (B4V) Silverado Performance Edition on model CC15753. Not available on models C*15543.	A[1]	A[1]	--	A[1]	A[1]	A[1]
		Mechanical						
8B0		**Batteries, 770 CCA with a 600 CCA auxiliary (MSRP = $215.00)** Provides a 770 CCA main cranking battery with a 600 CCA auxiliary battery. Auxiliary battery has an isolator and is not wired to ignition. Auxiliary battery provides an auxiliary electrical power source. 1 - Not available with RPO (L59) Vortec 5.3L V8 SFI, Flexible Fuel. Not available on models C*15543.	A[1]	A[1]	--	A[1]	A[1]	A[1]
7Y9		**Battery, Single 770 CCA (MSRP = $56.00)** Provides a 770 CCA HD cranking battery. 1 - Not available on models C*15543.	A[1]	A[1]	--	A[1]	A[1]	A[1]
8T7		**Half shaft boot for 4x4 (MSRP = $150.00)** Front-wheel driveshaft with a ballistic nylon Cordura protective cover on 4-wheel drive vehicles. Should be restricted to vehicles used in severe off-highway service. 1 - Requires models K15553, K15703, K15753, K15903 and K15953.	A[1]	A[1]	--	A[1]	A[1]	A[1]
7Z1		**Horn, high note (MSRP = $20.00)** High note horn in addition to the low note horn.	A	A	--	--	--	--

Free Flow RPO Code	Ref. Only RPO Code	Description 1 - Equipment Groups 1WT and 1LS available on CC15*03, CK15*03, CC15753, CK15753, CC15953 and CK15953 Models. 2 - Equipment Group 2LS available on C*15543 Models. 3 - Equipment Groups 1LT available on all models. 4 - Equipment Groups 2LT and 3LT available on CC15*53, CK15*53, and C*15543 Models.	Reg. and Ext. Cab		Crew Cab	Reg., Ext. and Crew Cab	Ext. and Crew Cab	
			Work Truck 1WT[1]	LS 1LS[1]	LS 2LS[2]	LT1 1LT[3]	LT2 2LT[4]	LT3 3LT[4]
9L4		**Power supply, 12 volt (MSRP = $168.00)** 12 volt direct power supply from the battery with two separate 30 amp fused circuits. Each circuit has a 30 amp mini fuse for both positive and ground to protect electrical accessories. Main supply lead has a 40 amp maxi-fuse. All fuses are serviceable. Provides either direct battery power or operation through the ignition system. Hook-up wire is provided under the passenger side glove box. Operational amperage is 21 amps each circuit; 28 amps total. Hook-up and operational instructions are provided. 1 - Requires RPO (Z83) Solid Smooth Ride Suspension Package, RPO (Z71) Off-Road Suspension Package, or RPO (Z85) Handling/Trailering Suspension Package. Not available with RPO (ZX3) Ride-Control Suspension Package, RPO (U2K) XM Satellite Radio or RPO (UE1) OnStar, RPO (MG5) 5-speed manual transmission or RPO (LU3) Vortec 4.3L V6 MFI engine. Not available on models C*15543 or with RPO (NHT) VortecMax Performance Pack.	A[1]	A[1]	--	A[1]	A[1]	A[1]
		Ship Thru Codes						
B9V		**Ship Thru for Models C*15753 and C*15543 (MSRP = $70.00)** Produced in Oshawa Assembly and shipped to Kerr Industries in Oshawa, Ontario and returned to Oshawa Assembly for shipping to final destination.	A	A	A	A	A	A
TRE		**Ship Thru for Models C*15*3 (MSRP = $95.00)** Produced in Ft. Wayne Assembly and shipped to Ft. Wayne Fleet Equipment 1 - Not available with RPO (U01) amber roof marker lamps on models C*15*3. Not available on models C*15543.	A[1]	A[1]	A[1]	A[1]	A[1]	A[1]
VAB		**Ship Thru for Models C*15*3 (MSRP = $165.00)** Produced in Pontiac Assembly and shipped to NBC Truck Equipment 1 - Not available with RPO (LU3) Engine, 4.3L V6. Not available with RPO (QXR) Tires, LT245/70R17 all-terrain, blackwall. Not available on models C*15543.	A[1]	A[1]	A[1]	A[1]	A[1]	A[1]
VAY		**Ship Thru for Models C*15*3 (MSRP = $165.00)** Produced in Pontiac Assembly and shipped to K&B Mounting 1 - Not available with RPO (LU3) Engine, 4.3L V6. Not available with RPO (QXR) Tires, LT245/70R17 all-terrain, blackwall. Not available on models C*15543.	A[1]	A[1]	A[1]	A[1]	A[1]	A[1]

Free Flow RPO Code	Ref. Only RPO Code	Description 1 - Equipment Groups 1WT and 1LS available on CC15*03, CK15*03, CC15753, CK15753, CC15953 and CK15953 Models. 2 - Equipment Group 2LS available on C*15543 Models. 3 - Equipment Groups 1LT available on all models. 4 - Equipment Groups 2LT and 3LT available on CC15*53, CK15*53, and C*15543 Models.	Reg. and Ext. Cab		Crew Cab	Reg., Ext. and Crew Cab	Ext. and Crew Cab	
			Work Truck 1WT[1]	LS 1LS[1]	LS 2LS[2]	LT1 1LT[3]	LT2 2LT[4]	LT3 3LT[4]
VBK		**Ship Thru for Models C*15*3 (MSRP = $270.00)** Produced in Pontiac Assembly and shipped to Ft. Wayne Fleet Equipment 1 - Not available with RPO (LU3) Engine, 4.3L V6. Not available with RPO (QXR) Tires, LT245/70R17 all-terrain, blackwall. Not available on models C*15543.	A[1]	A[1]	A[1]	A[1]	A[1]	A[1]
VDE		**Ship Thru for Models C*15*3 (MSRP = $230.00)** Produced in Ft. Wayne Assembly and shipped to Knapheide Truck Equipment 1 - Not available with RPO (U01) amber roof marker lamps on models C*15*3. Not available on models C*15543.	A[1]	A[1]	A[1]	A[1]	A[1]	A[1]
VGH		**Ship Thru for Models C*15*3 (MSRP = $160.00)** Produced in Pontiac Assembly and shipped to Monroe Truck Equipment 1 - Not available with RPO (LU3) Engine, 4.3L V6. Not available with RPO (QXR) Tires, LT245/70R17 all-terrain, blackwall. Not available with C*15553, CC15753 or C*15543 models. Not available with RPO (L59) Vortec 5.3L V8 SFI FlexFuel engine unless combined with C*15903 or C*15953 models.	A[1]	A[1]	A[1]	A[1]	A[1]	A[1]
VGZ		**Ship Thru for Models C*15*3 (MSRP = $165.00)** Produced in Pontiac Assembly and shipped to Canfield 1 - Not available with RPO (LU3) Engine, 4.3L V6. Not available with RPO (QXR) Tires, LT245/70R17 all-terrain, blackwall. Not available on models C*15543.	A[1]	A[1]	A[1]	A[1]	A[1]	A[1]
VSH		**Ship Thru for Models C*15*03, C*15753, and CC15553 (MSRP = $125.00)** Produced in Fort Wayne Assembly and shipped to Specialty Vehicle Engineering of America (SVEA). 1 - Requires contact with SVEA at 887-374-5559 once ordered to arrange upfits desired on unit. Not available with (NHT) Vortec Max Performance Pack, or (B4V) Performance Edition.	A[1]	A[1]	A[1]	A[1]	A[1]	A[1]
VTT		**Ship Thru for Models C*15*3 (MSRP = $240.00)** Produced in Ft. Wayne Assembly and shipped to Buckeye Truck Equipment 1 - Not available with RPO (U01) amber roof marker lamps on models C*15*3. Not available on models C*15543.	A[1]	A[1]	A[1]	A[1]	A[1]	A[1]
VWB		**Ship Thru for Models C*15*3 (MSRP = $150.00)** Produced in Ft. Wayne Assembly and shipped to Emmert Equipment 1 - Not available with RPO (U01) amber roof marker lamps on models C*15*3. Not available on models C*15543.	A[1]	A[1]	A[1]	A[1]	A[1]	A[1]

2007 Chevrolet Truck Silverado 1500 SEO OPTIONS/SHIP THRU CODES
Classic

Free Flow RPO Code	Ref. Only RPO Code	Description 1 - Equipment Groups 1WT and 1LS available on CC15*03, CK15*03, CC15753, CK15753, CC15953 and CK15953 Models. 2 - Equipment Group 2LS available on C*15543 Models. 3 - Equipment Groups 1LT available on all models. 4 - Equipment Groups 2LT and 3LT available on CC15*53, CK15*53, and C*15543 Models.	Reg. and Ext. Cab		Crew Cab	Reg., Ext. and Crew Cab	Ext. and Crew Cab	
			Work Truck 1WT[1]	LS 1LS[1]	LS 2LS[2]	LT1 1LT[3]	LT2 2LT[4]	LT3 3LT[4]
VWG		**Ship Thru for Models C*15**3 (MSRP = $165.00)** Produced in Ft. Wayne Assembly and shipped to Monroe Truck Equipment **1 - Not available with RPO (U01) amber roof marker lamps on models C*15**3. Not available on models C*15543.**	A[1]	A[1]	A[1]	A[1]	A[1]	A[1]
VWH		**Ship Thru for Models C*15**3 (MSRP = $220.00)** Produced in Ft. Wayne Assembly and shipped to Masterack Truck Equipment **1 - Not available with RPO (U01) amber roof marker lamps on models C*15**3. Not available on models C*15543.**	A[1]	A[1]	A[1]	A[1]	A[1]	A[1]
VWK		**Ship Thru for Models C*15903 (MSRP = $595.00)** Produced in Ft. Wayne Assembly and shipped to L-Z Trucking in St. Paul MN and returned to Janesville assembly for shipping to final destination. Available on all trim levels.	A	A	--	A	A	A
VWS		**Ship Thru for Models CK15753, C*15*03 (MSRP = $310.00)** Produced in Pontiac Assembly and shipped to Buckeye Truck Equipment **1 - Not available with RPO (LU3) Engine, 4.3L V6. Not available with RPO (QXR) Tires, LT245/70R17 all-terrain, blackwall. Not available on models C*15543.**	A[1]	A[1]	--	A[1]	A[1]	A[1]
VYC		**Ship Thru for Models C*15**3 (MSRP = $160.00)** Produced in Pontiac Assembly and shipped to Knapheide Truck Equipment **1 - Not available with RPO (LU3) Engine, 4.3L V6. Not available with RPO (QXR) Tires, LT245/70R17 all-terrain, blackwall. Not available on models C*15543.**	A[1]	A[1]	A[1]	A[1]	A[1]	A[1]
VYS		**Ship Thru for Models C*15**3 (MSRP = $165.00)** Produced in Pontiac Assembly and shipped to Masterack Truck Equipment **1 - Not available with RPO (LU3) Engine, 4.3L V6. Not available with RPO (QXR) Tires, LT245/70R17 all-terrain, blackwall. Not available on models C*15543.**	A[1]	A[1]	A[1]	A[1]	A[1]	A[1]

2007 Chevrolet Truck Silverado 1500 ONSTAR FLEET CODES
Classic

S = Standard Equipment A = Available -- (dashes) = Not Available D = ADI Available
■ = Included in Equipment Group □ = Included in Equipment Group but upgradeable

*Indicates availability of feature on multiple models. For example, it indicates feature availability on 2WD and 4WD Models or Rear wheel drive and All-wheel drive Models.

Codes listed in the shaded column titled Ref. Only RPO Code are for internal use only and should not be ordered.

Free Flow RPO Code	Ref. Only RPO Code	Description 1 - Equipment Groups 1WT and 1LS available on CC15*03, CK15*03, CC15753, CK15753, CC15953 and CK15953 Models. 2 - Equipment Group 2LS available on C*15543 Models. 3 - Equipment Groups 1LT available on all models. 4 - Equipment Groups 2LT and 3LT available on CC15*53, CK15*53, and C*15543 Models.	Reg. and Ext. Cab		Crew Cab	Reg., Ext. and Crew Cab	Ext. and Crew Cab	
			Work Truck 1WT[1]	LS 1LS[1]	LS 2LS[2]	LT1 1LT[3]	LT2 2LT[4]	LT3 3LT[4]
R8G		**OnStar 1 Additional Year of Safe and Sound Service (MSRP= $199).** Provides 1 year of Safe and Sound service following the first year of OnStar service included in the price of the vehicle. Fleet may also order (RFB) 2-Years OnStar Business Vehicle Manager Service **1 - Requires one of the following Fleet or Government order types: FLS, FNR, FRC, FBC, FGO or FEF. Not available with R8P, R8U, R8V, R8W, R8Y or R8Z. Requires (UE1) 1-Year OnStar service.**	--	--	--	A[1]	A[1]	A[1]
R8P		**OnStar 2 Additional Years of Safe and Sound Service (MSRP=$379)** Provides 2 additional years of Safe and Sound service following the first year of OnStar service included in the price of the vehicle. Fleet may also order (RFC) 3-Years OnStar Business Vehicle Manager Service **1 - Requires one of the following Fleet or Government order types: FLS, FNR, FRC, FBC, FGO or FEF. Not available with R8G, R8U, R8V, R8W, R8Y or R8Z. Requires (UE1) 1-Year OnStar service.**	--	--	--	A[1]	A[1]	A[1]
R8U		**OnStar 3-Years Safe and Sound Service (MSRP=$679)** Provides 3 Years of Safe and Sound service. Includes cost of hardware. Fleet may also order (RFC) 3-Years OnStar Business Vehicle Manager Service **1 - Requires one of the following Fleet or Government order types: FLS, FNR, FRC, FBC, FGO or FEF. Requires (UE1) 1-Year OnStar service. Not available with R8G, R8P, R8V, R8W, R8Y or R8Z.**	--	--	--	A[1]	A[1]	A[1]
R8V		**OnStar 3-Years Directions and Connections Service (MSRP=$979)** Provides 3 years of Directions and Connections service. Includes cost of hardware. Fleet may also order (RFC) 3-Years OnStar Business Vehicle Manager Service **1 - Requires one of the following Fleet or Government order types: FLS, FNR, FRC, FBC, FGO or FEF. Requires (UE1) 1-Year OnStar service. Not available with R8G, R8P, R8U, R8W, R8Y or R8Z.**	--	--	--	A[1]	A[1]	A[1]

2007 Chevrolet Truck Silverado 1500 Classic ONSTAR FLEET CODES

Free Flow RPO Code	Ref. Only RPO Code	Description 1 - Equipment Groups 1WT and 1LS available on CC15*03, CK15*03, CC15753, CK15753, CC15953 and CK15953 Models. 2 - Equipment Group 2LS available on C*15543 Models. 3 - Equipment Groups 1LT available on all models. 4 - Equipment Groups 2LT and 3LT available on CC15*53, CK15*53, and C*15543 Models.	Reg. and Ext. Cab		Crew Cab	Reg., Ext. and Crew Cab	Ext. and Crew Cab	
			Work Truck 1WT[1]	LS 1LS[1]	LS 2LS[2]	LT1 1LT[3]	LT2 2LT[4]	LT3 3LT[4]
R8W		**OnStar 1-Year Directions and Connections Service (MSRP=$100)** Provides an upgrade from Safe and Sound service included in the price of the vehicle in the first year. Fleet may also order (RFA) 1-Year OnStar Business Vehicle Manager Service 1 - Requires one of the following Fleet or Government order types: FLS, FNR, FRC, FBC, FGO or FEF. Not available with R8G, R8P, R8U, R8V, R8Y or R8Z. Requires (UE1) 1-Year OnStar service.	--	--	--	A[1]	A[1]	A[1]
R8Y		**OnStar 2-Years Directions and Connections Service (MSRP=$399)** Provides cumulative 2 Years of Directions and Connections service. In the first year, this is an upgrade from Safe and Sound service included in the price of the vehicle. Fleet may also order (RFB) 2-Years OnStar Business Vehicle Manager Service 1 - Requires one of the following Fleet or Government order types: FLS, FNR, FRC, FBC, FGO or FEF. Not available with R8G, R8P, R8U, R8V, R8W or R8Z. Requires (UE1) 1-Year OnStar service.	--	--	--	A[1]	A[1]	A[1]
R8Z		**OnStar 3-Years Directions and Connections Service (MSRP=$679)** Provides cumulative 3 Years of Directions and Connections service. In the first year, this is an upgrade from Safe and Sound service included in the price of the vehicle. Fleet may also order (RFC) 3-Year OnStar Business Vehicle Manager Service 1 - Requires one of the following Fleet or Government order types: FLS, FNR, FRC, FBC, FGO or FEF. Not available with R8G, R8P, R8U, R8V, R8W or R8Y. Requires (UE1) 1-Year OnStar service.	--	--	--	A[1]	A[1]	A[1]
RFA		**OnStar 1-Year Business Vehicle Manager Service (MSRP=$25)** Provides one year of OnStar Business Vehicle Manager Service 1 - Requires one of the following Fleet or Government order types: FLS, FNR, FRC, FBC, FGO or FEF. Not available with RFB or RFC. Requires (UE1) 1-Year OnStar service or (R8W) 1-Year Directions and Connections Service.	--	--	--	A[1]	A[1]	A[1]
RFB		**OnStar 2-Years Business Vehicle Manager Service (No charge)** Provides two years of OnStar Business Vehicle Manager Service 1 - Requires one of the following Fleet or Government order types: FLS, FNR, FRC, FBC, FGO or FEF. Not available with RFA or RFC. Requires (UE1) 1-Year OnStar service and either (R8G) or (R8Y) which provide for a total of two years of OnStar service.	--	--	--	A[1]	A[1]	A[1]

2007 Chevrolet Truck Silverado 1500 Classic ONSTAR FLEET CODES

Free Flow RPO Code	Ref. Only RPO Code	Description 1 - Equipment Groups 1WT and 1LS available on CC15*03, CK15*03, CC15753, CK15753, CC15953 and CK15953 Models. 2 - Equipment Group 2LS available on C*15543 Models. 3 - Equipment Groups 1LT available on all models. 4 - Equipment Groups 2LT and 3LT available on CC15*53, CK15*53, and C*15543 Models.	Reg. and Ext. Cab		Crew Cab	Reg., Ext. and Crew Cab	Ext. and Crew Cab	
			Work Truck 1WT[1]	LS 1LS[1]	LS 2LS[2]	LT1 1LT[3]	LT2 2LT[4]	LT3 3LT[4]
RFC		**OnStar 3-Years Business Vehicle Manager Service (No Charge)** Provides three years of OnStar Business Vehicle Manager Service 1 - Requires one of the following Fleet or Government order types: FLS, FNR, FRC, FBC, FGO or FEF. Not available with RFA or RFB. Requires (UE1) 1-Year OnStar service and either (R8P), (R8U), (R8V), or (R8Z) which provide for a total of three years of OnStar service.	--	--	--	A[1]	A[1]	A[1]

There is no data available for Silverado 1500 Classic.

All dimensions in inches (mm) unless otherwise stated.

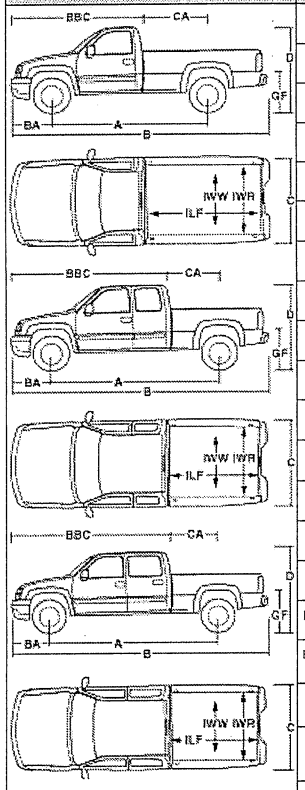

	Specifications	CC15703 2WD Regular Cab Standard Box	CC15803 2WD Regular Cab Long Box	CC15553 2WD Extended Cab Short Box	CC15753 2WD Extended Cab Standard Box	CC15953 2WD Extended Cab Long Box	CC15543 2WD Crew Cab Short Box
A	Wheelbase	119.00 (3023)	133.00 (3378)	134.00 (3404)	143.50 (3645)	157.50 (4000)	143.50 (3645)
B	Overall length	205.70 (5225)	224.50 (5702)	220.20 (5593)	230.20 (5847)	249.00 (6325)	230.20 (5847)
C	Body width	78.50 (1994)	78.50 (1994)	78.50 (1994)	78.50 (1994)	78.50 (1994)	78.50 (1994)
D	Overall height	71.20 (1808)	71.00 (1803)	71.20 (1808)	71.20 (1808)	70.80 (1798)	72.60 (1844)
	Head room, front	41.00 (1041)	41.00 (1041)	41.00 (1041)	41.00 (1041)	41.00 (1041)	40.70 (1034)
	Head room, rear	--	--	38.40 (975)	38.40 (975)	38.40 (975)	40.20 (1021)
	Shoulder room, front	65.20 (1656)	65.20 (1656)	65.20 (1656)	65.20 (1656)	65.20 (1656)	65.20 (1656)
	Shoulder room, rear	--	--	66.30 (1684)	66.30 (1684)	66.30 (1684)	65.10 (1654)
	Hip room, front	61.40 (1560)	61.40 (1560)	61.40 (1560)	61.40 (1560)	61.40 (1560)	61.40 (1560)
	Hip room, rear	--	--	61.40 (1560)	61.40 (1560)	61.40 (1560)	62.90 (1598)
	Leg room, front	41.30 (1049)	41.30 (1049)	41.30 (1049)	41.30 (1049)	41.30 (1049)	41.30 (1049)
	Leg room, rear	--	--	33.70 (856)	33.70 (856)	33.70 (856)	39.10 (993)
CA	Cab to axle	41.90 (1064)	55.90 (1420)	32.46 (824)	41.90 (1064)	55.90 (1420)	32.70 (831)
BA	Front bumper to axle	36.90 (937)	36.90 (937)	36.90 (937)	36.90 (937)	36.90 (937)	37.00 (940)
	Rear bumper to axle	47.00 (1194)	52.00 (1321)	47.00 (1194)	47.00 (1194)	52.00 (1321)	47.00 (1194)
IWR	Tailgate width, Fleetside	63.80 (1621)	63.80 (1621)	TBD	63.80 (1621)	63.80 (1621)	60.60 (1539)
BBC	Front bumper to back of cab	114.00 (2896)	114.00 (2896)	138.50 (3518)	138.50 (3518)	138.50 (3518)	148.10 (3762)
GF	Ground to top of rear load floor	31.60 (803)	31.60 (803)	31.60 (803)	31.60 (803)	31.60 (803)	31.60 (803)
ILF	Inside length, at floor, Fleetside	78.70 (1999)	97.60 (2479)	69.20 (1758)	78.70 (1999)	97.60 (2479)	69.20 (1758)
	Inside height, Fleetside	19.50	19.50	19.50	19.50	19.50	19.50

2007 Chevrolet Truck Silverado 1500 Classic — DIMENSIONS - 2WD

All dimensions in inches (mm) unless otherwise stated.

		Specifications	CC15703 2WD Regular Cab Standard Box	CC15903 2WD Regular Cab Long Box	CC15553 2WD Extended Cab Short Box	CC15753 2WD Extended Cab Standard Box	CC15953 2WD Extended Cab Long Box	CC15543 2WD Crew Cab Short Box
			(495)	(495)	(495)	(495)	(495)	(495)
		Inside width, at floor, Fleetside	64.80 (1646)	64.80 (1646)	60.20 (1529)	64.80 (1646)	64.80 (1646)	60.20 (1529)
	IWW	Inside width, between wheelhousing, Fleetside	50.00 (1270)	50.00 (1270)	50.00 (1270)	50.00 (1270)	50.00 (1270)	50.00 (1270)
		Ground clearance, front	8.00 (203)	8.00 (203)	8.00 (203)	8.00 (203)	8.00 (203)	8.10 (206)
		Ground clearance, rear	8.50 (216)	8.40 (213)	8.30 (211)	8.30 (211)	8.30 (211)	8.10 (206)

Published dimensions indicated are without optional equipment or accessories. Additional accessories or equipment ordered at the customer's request can result in a minor change in these dimensions.

2007 Chevrolet Truck Silverado 1500 Classic — DIMENSIONS - 4WD

All dimensions in inches (mm) unless otherwise stated.

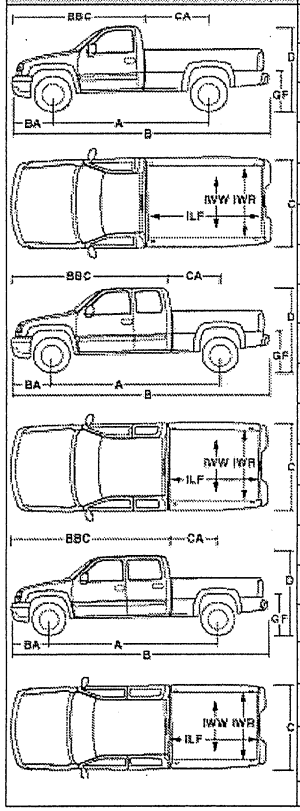

	Specifications	CK15703 4x4 Regular Cab Standard Box	CK15903 4x4 Regular Cab Long Box	CK15553 4x4 Extended Cab Short Box	CK15753 4x4 Extended Cab Standard Box	CK15953 4x4 Extended Cab Long Box	CK15543 4x4 Crew Cab Short Box
A	Wheelbase	119.00 (3023)	133.00 (3378)	134.00 (3404)	143.50 (3645)	157.50 (4000)	143.50 (3645)
B	Overall length	205.70 (5225)	224.50 (5702)	220.20 (5593)	230.20 (5847)	249.00 (6325)	230.20 (5847)
C	Body width	78.50 (1994)	78.50 (1994)	78.50 (1994)	78.50 (1994)	78.50 (1994)	78.50 (1994)
D	Overall height	73.80 (1875)	73.70 (1872)	73.90 (1877)	73.90 (1877)	73.70 (1872)	75.00 (1905)
	Head room, front	41.00 (1041)	41.00 (1041)	41.00 (1041)	41.00 (1041)	41.00 (1041)	40.70 (1034)
	Head room, rear	--	--	38.40 (975)	38.40 (975)	38.40 (975)	40.20 (1021)
	Shoulder room, front	65.20 (1656)	65.20 (1656)	65.20 (1656)	65.20 (1656)	65.20 (1656)	65.20 (1656)
	Shoulder room, rear	--	--	66.30 (1684)	66.30 (1684)	66.30 (1684)	65.10 (1654)
	Hip room, front	61.40 (1560)	61.40 (1560)	61.40 (1560)	61.40 (1560)	61.40 (1560)	61.40 (1560)
	Hip room, rear	--	--	61.40 (1560)	61.40 (1560)	61.40 (1560)	62.90 (1598)
	Leg room, front	41.30 (1049)	41.30 (1049)	41.30 (1049)	41.30 (1049)	41.30 (1049)	41.30 (1049)
	Leg room, rear	--	--	33.70 (856)	33.70 (856)	33.70 (856)	39.10 (993)
CA	Cab to axle	41.90 (1064)	55.90 (1420)	32.46 (824)	41.90 (1064)	55.50 (1410)	32.70 (831)
BA	Front bumper to axle	36.90 (937)	36.90 (937)	36.90 (937)	36.90 (937)	36.90 (937)	37.00 (940)
	Rear bumper to axle	47.00 (1194)	52.00 (1321)	47.00 (1194)	47.00 (1194)	52.00 (1321)	47.00 (1194)
IWR	Tailgate width, Fleetside	63.80 (1621)	63.80 (1621)	TBD	63.80 (1621)	63.80 (1621)	60.60 (1539)
BBC	Front bumper to back of cab	114.00 (2896)	114.00 (2896)	138.50 (3518)	138.50 (3518)	138.50 (3518)	148.10 (3762)
GF	Ground to top of rear load floor	33.70 (856)	33.70 (856)	33.70 (856)	33.70 (856)	33.70 (856)	33.70 (856)
ILF	Inside length, at floor, Fleetside	78.70 (1999)	97.60 (2479)	69.20 (1758)	78.70 (1999)	97.60 (2479)	69.20 (1758)
	Inside height, Fleetside	19.50	19.50	19.50	19.50	19.50	19.50

2007 Chevrolet Truck Silverado 1500 Classic — DIMENSIONS - 4WD

All dimensions in inches (mm) unless otherwise stated.

		Specifications	CK15703 4x4 Regular Cab Standard Box	CK15903 4x4 Regular Cab Long Box	CK15553 4x4 Extended Cab Short Box	CK15753 4x4 Extended Cab Standard Box	CK15953 4x4 Extended Cab Long Box	CK15543 4x4 Crew Cab Short Box
			(495)	(495)	(495)	(495)	(495)	(495)
		Inside width, at floor, Fleetside	64.80 (1646)	64.80 (1646)	60.20 (1529)	64.80 (1646)	64.80 (1646)	60.20 (1529)
	IWW	Inside width, between wheelhousing, Fleetside	50.00 (1270)	50.00 (1270)	50.00 (1270)	50.00 (1270)	50.00 (1270)	50.00 (1270)
		Ground clearance, front	8.40 (213)	8.40 (213)	8.70 (221)	8.70 (221)	8.40 (213)	8.70 (221)
		Ground clearance, rear	8.70 (221)	8.70 (221)	8.60 (218)	8.60 (218)	8.60 (218)	8.70 (221)

Published dimensions indicated are without optional equipment or accessories. Additional accessories or equipment ordered at the customer's request can result in a minor change in these dimensions.

2007 Chevrolet Truck Silverado 1500 Classic — SPECS - REGULAR CAB

	CC15703 2WD Regular Cab Standard Box	CC15903 2WD Regular Cab Long Box	CK15703 4x4 Regular Cab Standard Box	CK15903 4x4 Regular Cab Long Box
Specifications				
Front shock absorber diameter, in. (mm)	1.26 (32)	1.26 (32)	1.26 (32)	1.26 (32)
Front stabilizer bar diameter, in. (mm)	1.42 (36)	1.42 (36)	1.12 (28)	1.12 (28)
Rear shock absorber diameter, in. (mm)	1.26 (32)	1.26 (32)	1.26 (32)	1.26 (32)
Turning diameter, curb-to-curb, ft. (m)	40.1 (12.2)	43.8 (13.4)	40.7 (12.4)	44.5 (13.6)
Capacities				
Front axle, lbs. (kg)	3150 (1429)	3150 (1429)	3925 (1780)	3925 (1780)
Front spring capacity, lbs. (kg)	3476 (1577)	3739 (1696)	3925 (1780)	3925 (1780)
Rear axle, lbs. (kg)	3750 (1701)	3750 (1701)	3750 (1701)	3750 (1701)
Rear spring capacity, lbs. (kg)	3686 (1672)	3686 (1672)	3750 (1701)	3750 (1701)
Curb weight, lbs. (kg)	4211 (1910)	4348 (1972)	4508 (2045)	4634 (2102)
Cargo volume, cargo box, cu. ft. (liters)	56.9 (1611.4)	73.9 (2092.8)	56.9 (1611.4)	73.9 (2092.8)
Payload[1], lbs. (kg)	1889 (857)	2052 (931)	1892 (858)	1766 (801)
Gross Vehicle Weight Rating (GVWR), lbs. (kg)	6100 (2767)	6400 (2903)	6400 (2903)	6400 (2903)
Front Gross Axle Weight Rating (GAWR), lbs. (kg)	3150 (1429)	3150 (1429)	3925 (1780)	3925 (1780)
Rear Gross Axle Weight Rating (GAWR), lbs. (kg)	3686 (1672)	3686 (1672)	3750 (1701)	3750 (1701)
Fuel capacity, approximate, gallon (liters)	26 (98)	34 (129)	26 (98)	34 (129)
Seating capacity (front/rear)	3	3	3	3

1. Maximum payload capacity includes weight of driver, passengers, optional equipment and cargo.

2007 Chevrolet Truck Silverado 1500 Classic SPECS - EXTENDED CAB

	CC15553 2WD Extended Cab Short Box	CC15753 2WD Extended Cab Standard Box	CC15953 2WD Extended Cab Long Box	CK15553 4x4 Extended Cab Short Box	CK15753 4x4 Extended Cab Standard Box	CK15953 4x4 Extended Cab Long Box
Specifications						
Front shock absorber diameter, in. (mm)	1.42 (36)	1.26 (32)	1.26 (32)	1.42 (36)	1.26 (32)	1.26 (32)
Front stabilizer bar diameter, in. (mm)	1.13 (29)	1.42 (36)	1.42 (36)	1.13 (29)	1.12 (28)	1.12 (28)
Rear shock absorber diameter, in. (mm)	1.42 (36)	1.26 (32)	1.26 (32)	1.42 (36)	1.26 (32)	1.26 (32)
Turning diameter, curb-to-curb, ft. (m)	44.0 (13.4)	46.6 (14.2)	50.4 (15.4)	50.4 (15.4)	47.3 (14.4)	51.1 (15.6)
Capacities						
Front axle, lbs. (kg)	3600 (1633)	3600 (1633)	3600 (1633)	3925 (1780)	3925 (1780)	3925 (1780)
Front spring capacity, lbs. (kg)	3739 (1696)	3739 (1696)	4416 (2003)	3925 (1780)	3925 (1780)	3925 (1780)
Rear axle, lbs. (kg)	3686 (1672)	3750 (1701)	3750 (1701)	3750 (1701)	3750 (1701)	3750 (1701)
Rear spring capacity, lbs. (kg)	3686 (1672)	3686 (1672)	3686 (1672)	3750 (1701)	3750 (1701)	3750 (1701)
Curb weight, lbs. (kg)	4760 (2159)	4627 (2099)	4899 (2222)	5050 (2291)	5018 (2276)	5184 (2351)
Cargo volume, cargo box, cu. ft. (liters)	49.6 (1404.7)	56.9 (1611.4)	73.9 (2092.8)	49.6 (1404.7)	56.9 (1611.4)	73.9 (2092.8)
Payload[2], lbs. (kg)	1440 (653)	1573 (714)	1501 (681)	1350 (612)	1382 (627)	1216 (552)
Gross Vehicle Weight Rating (GVWR), lbs. (kg)	6200 (2812)	6200 (2812)	6400 (2903)	6400 (2903)	6400 (2903)	6400 (2903)
Front Gross Axle Weight Rating (GAWR), lbs. (kg)	3600 (1633)	3600 (1633)	3600 (1633)	3925 (1780)	3925 (1780)	3925 (1780)
Rear Gross Axle Weight Rating (GAWR), lbs. (kg)	3686 (1672)	3686 (1672)	3686 (1672)	3750 (1701)	3750 (1701)	3750 (1701)
Fuel capacity, approximate, gallon (liters)	26 (98)	26 (98)	34 (129)	26 (98)	26 (98)	34 (129)
Seating capacity (front/rear)	3/3	3/3	3/3	3/3	3/3	3/3

2. Maximum payload capacity includes weight of driver, passengers, optional equipment and cargo.

2007 Chevrolet Truck Silverado 1500 Classic SPECS - CREW CAB

	CC15543 2WD Crew Cab Short Box	CK15543 4x4 Crew Cab Short Box
Specifications		
Front shock absorber diameter, in. (mm)	1.61 (41)	1.61 (41)
Front stabilizer bar diameter, in. (mm)	1.42 (36)	1.13 (29)
Rear shock absorber diameter, in. (mm)	1.61 (41)	1.61 (41)
Turning diameter, curb-to-curb, ft. (m)	46.6 (14.2)	47.3 (14.4)
Capacities		
Front axle, lbs. (kg)	3650 (1656)	3925 (1780)
Front spring capacity, lbs. (kg)	4416 (2003)	3925 (1780)
Rear axle, lbs. (kg)	4000 (1814)	4000 (1814)
Rear spring capacity, lbs. (kg)	4000 (1814)	4000 (1814)
Curb weight, lbs. (kg)	4987 (2262)	5284 (2397)
Cargo volume, cargo box, cu. ft. (liters)	49.6 (1404.7)	49.6 (1404.7)
Payload[3], lbs. (kg)	1913 (868)	1716 (778)
Gross Vehicle Weight Rating (GVWR), lbs. (kg)	6900 (3130)	7000 (3175)
Front Gross Axle Weight Rating (GAWR), lbs. (kg)	3650 (1656)	3925 (1780)
Rear Gross Axle Weight Rating (GAWR), lbs. (kg)	4000 (1814)	4000 (1814)
Fuel capacity, approximate, gallon (liters)	26 (98)	26 (98)
Seating capacity (front/rear)	3/3	3/3

3. Maximum payload capacity includes weight of driver, passengers, optional equipment and cargo.

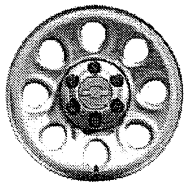	**Wheels**, 4 - 17" x 7" (43.2 cm x 17.8 cm) 6-lug painted steel, includes painted center caps and steel spare
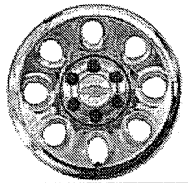	PY9 **Wheels**, 4 - 17" x 7.5" (43.2 cm x 19.1 cm) 6-lug chrome-styled steel, includes chrome center caps and steel spare
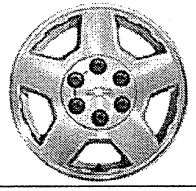	P25 **Wheels**, 4 - 17" x 7.5" (43.2 cm x 19.1 cm) 6-lug polished cast aluminum, includes steel spare

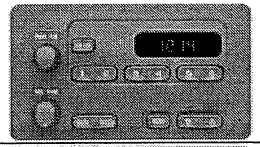	UM7 **Audio system**, AM/FM stereo with seek-and-scan and digital clock
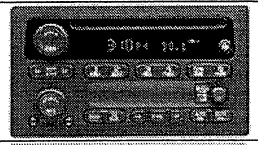	UB0 **Audio system**, AM/FM stereo with CD player, seek-and-scan, digital clock, auto-tone control, Radio Data System (RDS) and speed-compensated volume
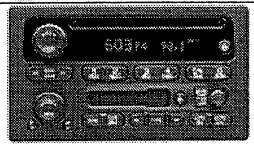	UB1 **Audio system**, AM/FM stereo with CD and cassette player, seek-and-scan, digital clock, auto-tone control, Radio Data System (RDS), speed-compensated volume, TheftLock and 4 speakers on Regular Cab and 6 speakers on Crew Cab models (with bucket seats includes a Bose speaker system, amplifier and subwoofer)
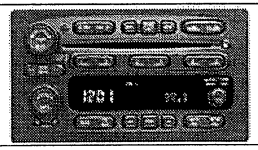	UC6 **Audio system**, AM/FM stereo with 6-disc CD changer, seek-and-scan, digital clock, auto-tone control, Radio Data System (RDS), speed-compensated volume and TheftLock

2007 Chevrolet Truck Silverado 1500 Classic — TRAILERING SPECS - Manual Transmission Ratings with Ball Hitch

Maximum trailer ratings are calculated assuming standard equipped vehicle, driver and required trailering equipment. The weight of optional equipment, passengers and cargo will reduce the maximum trailer weight your vehicle can tow. 10 to 15% of the trailer weight is the recommended trailer tongue load.

Manual Transmission Ratings with Ball Hitch

Model	(LU3) Vortec 4.3L V6 MFI	
	Axle Ratio	Maximum Trailer Weight lbs. (kg)
CC15703	3.23	4000 (1814)
CC15903	3.23	3800 (1724)
CK15703	3.73	4100 (1860)
CK15903	3.73	4000 (1814)

GCWR For Engine/Rear Axle Ratio Combination with Manual Transmission

Engine	(GCWR) Gross Combination Weight Ratings lbs. (kg)	
	8500 (3856)	9000 (4082)
(LU3) Vortec 4.3L V6 MFI	3.23[1]	3.73[2]

1 - Requires 2WD Models.
2 - Requires 4WD Models.

2007 Chevrolet Truck Silverado 1500 Classic — TRAILERING SPECS - Automatic Transmission Ratings with Ball Hitch

Maximum trailer ratings are calculated assuming standard equipped vehicle, driver and required trailering equipment. The weight of optional equipment, passengers and cargo will reduce the maximum trailer weight your vehicle can tow. 10 to 15% of the trailer weight is the recommended trailer tongue load.

Automatic Transmission Ratings with Ball Hitch

Model	(LU3) Vortec 4.3L V6 MFI		(LR4) Vortec 4.8L V8 SFI		(LM7) Vortec 5.3L V8 SFI		(LQ9) Vortec high-output 6.0L V8 SFI	
	Axle Ratio	Maximum Trailer Weight lbs. (kg)	Axle Ratio	Maximum Trailer Weight lbs. (kg)	Axle Ratio	Maximum Trailer Weight lbs. (kg)	Axle Ratio	Maximum Trailer Weight lbs. (kg)
CC15703	3.23	5000 (2268)	3.23	6400 (2903)	3.23	7400 (3357)		
			3.73	7400 (3357)	3.73	8400 (3810)		
CC15903	3.23	4800 (2177)	3.23	6200 (2812)	3.23	7200 (3266)		
			3.73	7200 (3266)	3.73	8200 (3720)		
CC15753	3.23	4600 (2087)	3.23	5900 (2676)	3.23	6900 (3130)		
	3.73	5100 (2313)	3.73	6900 (3130)	3.73	7900 (3583)		
CC15553					3.23	7000 (3175)		
					3.73	8000 (3629)		
CC15753 w/(B4V)							3.73	7800 (3538)
CC15953			3.23	5800 (2631)	3.23	6800 (3084)		
			3.73	6800 (3084)	3.73	7800 (3538)		
CC15753 w/(NHT)							4.10	10400 (4717)
CK15703	3.73	5100 (2313)	3.42	7100 (3221)	3.42	8100 (3674)		
			3.73	7100 (3221)	3.73	8100 (3674)		
			4.10	8100 (3674)	4.10	9100 (4128)		
CK15903	3.73	5000 (2268)	3.42	6900 (3130)	3.42	7900 (3583)		
			3.73	6900 (3130)	3.73	7900 (3583)		
			4.10	7900 (3583)	4.10	8900 (4037)		
CK15753			3.42	6700 (3039)	3.42	7700 (3493)		
			3.73	6700 (3039)	3.73	7700 (3493)		
			4.10	7700 (3493)	4.10	8700 (3946)		
CC15543					3.23	6700 (3039)		
					3.73	7700 (3493)		
CC15543 w/(NHT)							3.73	10100 (4581)
CK15553					3.42	7700 (3493)		
					3.73	7700 (3493)		
					4.10	8700 (3946)		
CK15753							4.10	10000 (4536)

Maximum trailer ratings are calculated assuming standard equipped vehicle, driver and required trailering equipment. The weight of optional equipment, passengers and cargo will reduce the maximum trailer weight your vehicle can tow. 10 to 15% of the trailer weight is the recommended trailer tongue load.

Automatic Transmission Ratings with Ball Hitch

Model	(LU3) Vortec 4.3L V6 MFI		(LR4) Vortec 4.8L V8 SFI		(LM7) Vortec 5.3L V8 SFI		(LQ9) Vortec high-output 6.0L V8 SFI	
	Axle Ratio	Maximum Trailer Weight lbs. (kg)	Axle Ratio	Maximum Trailer Weight lbs. (kg)	Axle Ratio	Maximum Trailer Weight lbs. (kg)	Axle Ratio	Maximum Trailer Weight lbs. (kg)
w/(NHT)								
CK15953			3.42	6500 (2948)	3.42	7500 (3402)		
			3.73	6500 (2948)	3.73	7500 (3402)		
			4.10	7500 (3402)	4.10	8500 (3856)		
CK15543					3.42	7400 (3357)		
					3.73	7400 (3357)		
					4.10	8400 (3810)		
CK15543 w/(NHT)							4.10	9900 (4491)

GCWR For Engine/Rear Axle Ratio Combination with Automatic Transmission

Engine	(GCWR) Gross Combination Weight Ratings lbs. (kg)						
	9500 (4309)	10000 (4536)	11000 (4990)	12000 (5443)	13000 (5897)	14000 (6350)	15500 (7031)
(LU3) Vortec 4.3L V6 MFI	3.23	3.73					
(LR4) Vortec 4.8L V8 SFI			3.23[1]	3.42 / 3.73	4.10[2]		
(LM7) Vortec 5.3L V8 SFI				3.23[1]	3.42 / 3.73	4.10[2]	
(LQ9) Vortec high-output 6.0L V8 SFI					3.73[3]		3.73 / 4.10[4]

1 - Requires 2WD Models.
2 - Requires 4WD Models.
3 - Requires (B4V) Silverado Performance Edition.
4 - Requires (NHT) Vortec Max Performance Pack.

Maximum trailer ratings are calculated assuming standard equipped vehicle, driver and required trailering equipment. The weight of optional equipment, passengers and cargo will reduce the maximum trailer weight your vehicle can tow. 15 to 25% of the trailer weight is the recommended 5th Wheel or Gooseneck kingpin load.

Automatic or Manual Transmission Ratings with 5th Wheel

Model	(LR4) Vortec 4.8L V8 SFI		(LM7) Vortec 5.3L V8 SFI		(LQ9) Vortec high-output 6.0L V8 SFI	
	Axle Ratio	Maximum Trailer Weight lbs. (kg)	Axle Ratio	Maximum Trailer Weight lbs. (kg)	Axle Ratio	Maximum Trailer Weight lbs. (kg)
CC15703	3.23	6400 (2903)	3.23	7400 (3357)		
	3.73	7400 (3357)	3.73	8400 (3810)		
CC15903	3.23	6200 (2812)	3.23	7200 (3266)		
	3.73	7200 (3266)	3.73	8200 (3720)		
CC15753	3.23	5900 (2676)	3.23	6800 (3084)		
	3.73	6800 (3084)	3.73	6800 (3084)		
CC15753 w/(NHT)					4.10	6900 (3130)
CC15953	3.23	5800 (2631)	3.23	6800 (3084)		
	3.73	6800 (3084)	3.73	7600 (3447)		
CK15703	3.42	7100 (3221)	3.42	7300 (3311)		
	4.10	7300 (3311)	4.10	7300 (3311)		
CK15903	3.42	6900 (3130)	3.42	7900 (3583)		
	4.10	7900 (3583)	4.10	8300 (3765)		
CK15753	3.42	6700 (3039)	3.42	6900 (3130)		
	4.10	6900 (3130)	4.10	6900 (3130)		

GCWR For Engine/Rear Axle Ratio Combination with Automatic Transmission

Engine	(GCWR) Gross Combination Weight Ratings lbs. (kg)				
	11000 (4990)	12000 (5443)	13000 (5897)	14000 (6350)	15500 (7031)
(LR4) Vortec 4.8L V8 SFI	3.23[1]	3.42 / 3.73	4.10[2]		
(LM7) Vortec 5.3L V8 SFI		3.23[1]	3.42 / 3.73	4.10[2]	
(LQ9) Vortec high-output 6.0L V8 SFI					4.10[3]

1 - Requires 2WD Models.
2 - Requires 4WD Models.
3 - Requires (NHT) Vortec Max Performance Pack.

Option Code	Description
**2	Seat trim, leather
**C	Seat trim, cloth
**D	Seat trim, Custom Cloth
**V	Seat trim, vinyl
5B5	Power windows and mirrors (MSRP = $738.00)
5G4	Provision for cab roof-mounted lamp (MSRP = $103.00)
5M1	Mirror, exterior, power adjustable, manual folding, non-heated and non-extendable (MSRP = No Charge)
5X7	Provision for body mounted warning lamp (MSRP = $98.00)Provides an instrument panel mounted switch and heavy duty electrical relay with hook-up terminal in the engine compartment for a body upfitter to connect a body mounted warning or emergency lamp. 40 amp nominal rating.
5Y0	Provision for body mounted lamp with hook-up wiring (MSRP = $88.00)Provides an instrument panel mounted switch and electrical hook-up behind the cab for a body upfitter to connect a body mounted warning or emergency lamp. 21 amp nominal rating.
5Z4	Spare wheel and tire delete (MSRP = -$110.00 Credit)
6C7	Console, roof with reading lamps (MSRP = $55.00)
6P3	Camper Mirrors, power adjustable glass, manual extendable, non-heated (MSRP = $238.00)Alternative mirrors replacing mirrors that are standard with SEO 5B5 Power windows and mirrors on a base decor truck. Right and left hand outside mirrors consisting of 50 square inch flat mirror surface positioned over a 20 square inch convex mirror surface with a common head. Includes turn signals in mirror glass.
7Y9	Battery, Single 770 CCA (MSRP = $56.00)
7Z1	Horn, high note (MSRP = $20.00)
8B0	Batteries, 770 CCA with a 600 CCA auxiliary (MSRP = $215.00)
8E9	Bumper, front, painted White (MSRP = $45.00)
8F2	Ornamentation, delete (MSRP = No Charge)Upfitter option.
8S3	Backup alarm (MSRP = $103.00)97 decibels back-up alarm.
8T7	Half shaft boot for 4x4 (MSRP = $150.00)
8V2	Jack and tools delete (MSRP = -$32.00 Credit)
8X1	Label, fasten safety belts (MSRP = $2.00)
9L3	Spare tire delete (MSRP = -$45.00 Credit)
9L4	Power supply, 12 volt (MSRP = $168.00)
9M4	Decal delete, tailgate (MSRP = No Charge)
9R0	Sound system, ETR AM/FM stereo with cassette (MSRP = $150.00) with Work Truck and (MSRP = No Charge) with LS or LT1 Decor
9R1	Decal delete, Pickup bed (MSRP = No Charge)
9R3	Sound system, delete (MSRP = No Charge)
9S1	Seats, vinyl bucket (MSRP = No Charge) with Work Truck and (MSRP = -$282.00) with LS Decor
9U3	Seats, cloth bucket (MSRP = No Charge) with Work Truck and (MSRP = -$282.00) with LS Decor
9U4	Remote keyless entry (MSRP = $170.00)
9V5	Paints, solid (MSRP = No Charge), Woodland Green
9V9	Paints, solid (MSRP = No Charge), Doeskin Tan
9W3	Paints, solid (MSRP = No Charge), Wheatland Yellow
9W4	Paints, solid (MSRP = No Charge), Tangier Orange
A28	Window, manual rear-sliding, deep-tinted
A31	Windows, power
A95	Seats, front bucket

Option Code	Description
AE7	Seats, front 40/20/40 split-bench
AE7	Seats, front 40/20/40 split-bench
AG1	Seat adjuster, driver 6-way power
AG2	Seat adjuster, front passenger 10-way power
AJ1	Glass, Solar-Ray deep-tinted
AN3	Seats, front bucket
AU0	Remote Keyless Entry
AU3	Door locks, power
B2E	Silverado Limited Edition
B30	Floor covering, color-keyed carpeting
B4V	Silverado Performance Edition
B71	Wheel flares, front and rear
B85	Moldings, bodyside
B9V	Ship Thru for Models C*15753 and C*15543 (MSRP = $70.00)Produced in Oshawa Assembly and shipped to Kerr Industries in Oshawa, Ontario and returned to Oshawa Assembly for shipping to final destination.
BG9	Floor covering, Black rubberized-vinyl
BTN	2LS Crew Sport Package
BVE	Regular production accessory, Assist steps, chrome plated tubular, stainless steel
BVS	Regular production accessory, Assist steps, Black coated tubular, stainless steel
BVU	Regular production accessory, Assist steps
C3J	GVWR, 6700 lbs. (3039 kg)
C42	Air conditioning delete
C49	Defogger, rear-window
C5H	GVWR, 6900 lbs. (3130 kg)
C5M	GVWR, 6100 lbs. (2767 kg)
C5U	GVWR, 6800 lbs. (3084 kg)
C5W	GVWR, 7000 lbs. (3175 kg)
C7H	GVWR, 6400 lbs. (2903 kg)
C7K	GVWR, 6500 lbs. (2948 kg)
CF5	Sunroof, power
CJ2	Air conditioning, dual-zone automatic climate control
CJ3	Air conditioning, dual-zone manual climate control
CWB	Chrome Exterior Package
D07	Console, floor
DE2	Mirrors, outside manual, Black
DF2	Mirrors, outside high-visibility camper-style, Black
DF5	Mirror, inside rearview auto-dimming
DK7	Console, overhead mini
DK8	Console, overhead deluxe
DL3	Mirrors, outside heated power-adjustable, power-folding and driver-side auto-dimming, Black
DL8	Mirrors, outside heated power-adjustable, Black
DNH	Regular production accessory, Underseat storage
DPN	Mirrors, outside heated power-adjustable vertical camper
E63	Pickup box, Fleetside
E95	Regular production accessory, Tonneau cover, Black, soft
EN6	Regular production accessory, Tonneau cover, Black, hard, folding, lockable
FE9	Emissions, Federal requirements

Option Code	Description
G80	Differential, heavy-duty automatic locking rear
GT4	Rear axle, 3.73 ratio
GT5	Rear axle, 4.10 ratio
GU5	Rear axle, 3.23 ratio
GU6	Rear axle, 3.42 ratio
K05	Engine block heater
K34	Cruise control
K47	Air cleaner, high-capacity
KG3	Alternator, 145 amps
KNP	Cooling, auxiliary external transmission oil cooler
KW1	Alternator, 160 amps
L33	Engine, Vortec 5.3L V8 SFI
L59	Engine, Vortec 5.3L V8 SFI FlexFuel
LM7	Engine, Vortec 5.3L V8 SFI
LQ9	Engine, Vortec high-output 6.0L V8 SFI
LR4	Engine, Vortec 4.8L V8 SFI
LU3	Engine, Vortec 4.3L V6 MFI
M30	Transmission, 4-speed automatic
M70	Transmission, 4-speed automatic
MG5	Transmission, 5-speed manual
NB8	Emissions override
NC7	Emissions override, Federal
NE1	Emissions, Maine, Massachusetts, New York or Vermont state requirements
NHT	Vortec Max Performance Pack
NP2	Transfer case, floor-mounted shifter
NP5	Steering wheel, leather-wrapped, Black
NP8	Transfer case, electronic Autotrac
NW7	Traction assist system
NZZ	Skid Plate Package
P25	Wheels, 4 - 17" x 7.5" (43.2 cm x 19.1 cm) 6-lug polished cast aluminum
PDB	OnStar Plus Package
PDG	Texas/Oklahoma/Louisiana LS Package
PDJ	South-West LT Extended and Crew Cab Package
PDU	Light Duty Power Package
PDX	Extended Cab Value Package
PDZ	Crew Cab Value Package
PPB	Regular production accessory, Pickup bed extender, brushed aluminum
PUB	Regular production accessory, Pickup bed protectors, Top side rails, Black molded
PY9	Wheels, 4 - 17" x 7.5" (43.2 cm x 19.1 cm) 6-lug chrome-styled steel
Q4B	GVWR, 6200 lbs. (2812 kg)
QJM	Tires, P265/70R17 on-/off-road, White outlined-letter
QJP	Tires, P265/70R17 on-/off-road, blackwall
QPO	Tires, P245/70R17 all-season, White outlined-letter
QPR	Tires, P245/70R17 all-season, blackwall
QVL	Tires, P265/70R17 all-season, blackwall
QVM	Tires, P265/70R17 all-season, White outlined-letter
QXR	Tires, LT245/70R17 all-terrain, blackwall
R6Q	OnStar Plus Package discount not desired
R6S	Value Package discount not desired

Option Code	Description
R6X	Texas/Oklahoma/Louisiana Package discounts (PDG) or (PDJ) not desired
R6Y	Light Duty Power Package discount not desired
R7C	Residency based package override
R7D	Wheel flares not desired
R8G	OnStar 1 Additional Year of Safe and Sound Service (MSRP= $199)
R8P	OnStar 2 Additional Years of Safe and Sound Service (MSRP=$379)
R8U	OnStar 3-Years Safe and Sound Service (MSRP=$679)
R8V	OnStar 3-Years Directions and Connections Service (MSRP=$979)
R8W	OnStar 1-Year Directions and Connections Service (MSRP=$100)
R8Y	OnStar 2-Years Directions and Connections Service (MSRP=$399)
R8Z	OnStar 3-Years Directions and Connections Service (MSRP=$679)
RFA	OnStar 1-Year Business Vehicle Manager Service (MSRP=$25)
RFB	OnStar 2-Years Business Vehicle Manager Service (No charge)
RFC	OnStar 3-Years Business Vehicle Manager Service (No Charge)
SAF	Spare tire lock
T96	Fog lamps, front
TGK	Solid PaintSEO solid paint, one color
TR3	Grille, chrome surround with black insert
TRE	Ship Thru for Models C*15**3 (MSRP = $95.00)Produced in Ft. Wayne Assembly and shipped to Ft. Wayne Fleet Equipment
U2K	XM Satellite Radio
U42	Entertainment system, rear seat DVD player
UB0	Audio system, AM/FM stereo with CD player
UB1	Audio system, AM/FM stereo with CD and cassette player
UC6	Audio system, AM/FM stereo with 6-disc CD changer
UE1	OnStar, 1-year of Safe and Sound plan
UG1	Universal Home Remote
UK3	Steering wheel controls, mounted audio and Driver Information Center controls
UK6	Audio system controls, rear
UM7	Audio system, AM/FM stereo
UQ3	Audio system feature, speaker system
UQ5	Audio system feature, 4-speaker system
UQ7	Audio system feature, Bose premium speaker system
UY2	Trailering wiring provisions, for camper, fifth wheel and gooseneck trailer
V43	Bumper, rear painted
V76	Recovery hooks, front, frame-mounted
VAB	Ship Thru for Models C*15**3 (MSRP = $165.00)Produced in Pontiac Assembly and shipped to NBC Truck Equipment
VAY	Ship Thru for Models C*15**3 (MSRP = $165.00)Produced in Pontiac Assembly and shipped to K&B Mounting
VB3	Bumper, rear chrome
VBK	Ship Thru for Models C*15**3 (MSRP = $270.00) Produced in Pontiac Assembly and shipped to Ft. Wayne Fleet Equipment
VDE	Ship Thru for Models C*15**3 (MSRP = $230.00)Produced in Ft. Wayne Assembly and shipped to Knapheide Truck Equipment
VF7	Bumper, rear delete
VG3	Bumper, front chrome with Gray lower
VGH	Ship Thru for Models C*15**3 (MSRP = $160.00)Produced in Pontiac Assembly and shipped to Monroe Truck Equipment

Option Code	Description
VGZ	Ship Thru for Models C*15**3 (MSRP = $165.00)Produced in Pontiac Assembly and shipped to Canfield
VNX	Grille , delete
VSH	Ship Thru for Models C*15*03, C*15753, and CC15553 (MSRP = $125.00)
VTT	Ship Thru for Models C*15**3 (MSRP = $240.00)Produced in Ft. Wayne Assembly and shipped to Buckeye Truck Equipment
VWB	Ship Thru for Models C*15**3 (MSRP = $150.00)Produced in Ft. Wayne Assembly and shipped to Emmert Equipment
VWG	Ship Thru for Models C*15**3 (MSRP = $165.00)Produced in Ft. Wayne Assembly and shipped to Monroe Truck Equipment
VWH	Ship Thru for Models C*15**3 (MSRP = $220.00)Produced in Ft. Wayne Assembly and shipped to Masterack Truck Equipment
VWK	Ship Thru for Models C*15903 (MSRP = $595.00)Produced in Ft. Wayne Assembly and shipped to L-Z Trucking in St. Paul MN and returned to Janesville assembly for shipping to final destination. Available on all trim levels.
VWS	Ship Thru for Models CK15753, C*15*03 (MSRP = $310.00)Produced in Pontiac Assembly and shipped to Buckeye Truck Equipment
VYC	Ship Thru for Models C*15**3 (MSRP = $160.00)Produced in Pontiac Assembly and shipped to Knapheide Truck Equipment
VYS	Ship Thru for Models C*15**3 (MSRP = $165.00)Produced in Pontiac Assembly and shipped to Masterack Truck Equipment
VYU	Snow Plow Prep Package
YF5	Emissions, California state requirements
Z71	Suspension Package, Off-Road
Z82	Trailering equipment, heavy-duty
Z83	Suspension Package, Solid Smooth Ride
Z85	Suspension Package, Handling/Trailering
ZX3	Suspension Package, Ride-Control
ZY1	Paint, solid
ZY2	Paint, two-tone

Updates for Silverado 1500 Classic

Week of 7/24/2006

Effective 7/24/2006, the following changes will be made to the Vehicle Order Guide:

- Exterior section-(PDG) Texas/Oklahoma/Louisiana LS Package, changed footnote #1 to read "Requires C*15703 or C*15903 models. Requires delivery to residents of TX/OK/LA and select counties in New Mexico, Arkansas and Kansas. Requires and only available with (LU3) Vortec 4.3L V6 MFI engine. Not available with Fleet or Government order types.".
- Exterior section-(PDJ) South-West LT Extended and Crew Cab Package, changed footnote #1 to read "Requires CC15753, CC15553 or CC15543 models. Not available with (**2) leather seating surfaces. Not available with Fleet or Government order types. Requires delivery to residents in TX/OK/LA/CA/FL/NM/NV/AZ and select counties in Mississippi, Alabama, Georgia, Arkansas and Kansas. Delivery outside of these parameters will result in a charge back to the ORIGINAL invoicing dealer.".

Week of 7/17/2006

Effective 7/17/2006, the following changes will be made to the Vehicle Order Guide:

- Interior section-Air bags, frontal, changed footnote #1 to read "Always use safety belts and the correct child restraints for your child's age and size. Even in vehicles equipped with air bags and the Passenger Sensing System, children are safer when properly secured in a rear seat. Never place a rear-facing infant restraint in the front seat of any vehicle equipped with an active frontal air bag. See the vehicle's Owner's Manual and child safety seat instructions for more safety information.".

Week of 7/10/2006

Effective 7/10/2006, the following changes will be made to the Vehicle Order Guide:

- SEO Ship Thru section- (5B5) Power windows and mirrors, Updated extended description to read "Provides power driver and passenger front side windows on a base trim level, includes SEO (5M1) LH and RH outside power adjustable, manual folding, non-heated, non-extendable mirrors and up level door panels. The mirror head is the same size and configuration as the base power mirror on LT Décor.".
- SEO Ship Thru section- (5M1) Updated main description to read "Mirror, exterior, power adjustable, manual folding, non-heated and non-extendable". Updated extended description to read "Provides the left and right hand side outside power adjustable, manual folding, non-heated, non-extendable, rear view mirrors that are included with SEO (5B5) Power windows and mirrors. Mirror head is the same size and configuration as the base mirror supplied on first tire Uplevel Décors except that the mirror head is not heated and not extendable." Updated restriction to read "Included and only available with SEO (5B5) power windows and mirrors.".

Week of 6/19/2006

Effective 6/19/2006, the following changes will be made to the Vehicle Order Guide:

- All sections-Removed the word "Federal" anywhere it used to say "Requires a Fleet or Federal Government order type.
- All sections-removed the hundred designation (ex: 5300) from all engine descriptions and replaced it with liters designation (ex: 5.3L). Please review entire order guide to see where it changed.

Week of 6/5/2006

Effective 6/5/2006, the following changes will be made to the Vehicle Order Guide:

- ZY2 Color and Trim section-(59U) Silver Birch Metallic with (16L) Graystone Metallic, changed Bodyside Molding Color to read "Graystone Metallic".
- SEO Ship Thru section-(TRE) Ship Thru for Models C*15**3 (MSRP = $80.00), updated footnote to read "Not available with RPO (U01) amber roof marker lamps on models C*15**3. Not available on models C*15543."
- SEO Ship Thru section-(VAB) Ship Thru for Models C*15**3 (MSRP = $100.00) , updated footnote to read "Not available with RPO (LU3) Engine, 4300 V6. Not available with RPO (QXR) Tires, LT245/70R17 all-terrain, blackwall. Not available on models C*15543."

- SEO Ship Thru section-(VAY) Ship Thru for Models C*15**3 (MSRP = $100.00), updated footnote to read "Not available with RPO (LU3) Engine, 4300 V6. Not available with RPO (QXR) Tires, LT245/70R17 all-terrain, blackwall. Not available on models C*15543."
- SEO Ship Thru section-(VBK) Ship Thru for Models C*15**3 (MSRP = $210.00), updated footnote to read "Not available with RPO (LU3) Engine, 4300 V6. Not available with RPO (QXR) Tires, LT245/70R17 all-terrain, blackwall. Not available on models C*15543."
- SEO Ship Thru section-(VDE) Ship Thru for Models C*15**3 (MSRP = $165.00), updated footnote to read "Not available with RPO (U01) amber roof marker lamps on models C*15**3. Not available on models C*15543."
- SEO Ship Thru section-(VGZ) Ship Thru for Models C*15**3 (MSRP = $105.00), updated footnote to read "Not available with RPO (LU3) Engine, 4300 V6. Not available with RPO (QXR) Tires, LT245/70R17 all-terrain, blackwall. Not available on models C*15543."
- SEO Ship Thru section-(VTT) Ship Thru for Models C*15**3 (MSRP = $240.00), updated footnote to read "Not available with RPO (U01) amber roof marker lamps on models C*15**3. Not available on models C*15543."
- SEO Ship Thru section-(VWB) Ship Thru for Models C*15**3 (MSRP = $125.00), updated footnote to read "Not available with RPO (U01) amber roof marker lamps on models C*15**3. Not available on models C*15543."
- SEO Ship Thru section-(VWG) Ship Thru for Models C*15**3 (MSRP = $165.00), updated footnote to read "Not available with RPO (U01) amber roof marker lamps on models C*15**3. Not available on models C*15543."
- SEO Ship Thru section-(VWH) Ship Thru for Models C*15**3 (MSRP = $220.00), updated footnote to read "Not available with RPO (U01) amber roof marker lamps on models C*15**3. Not available on models C*15543."
- SEO Ship Thru section-(VYC) Ship Thru for Models C*15**3 (MSRP = $115.00), updated footnote to read "Not available with RPO (LU3) Engine, 4300 V6. Not available with RPO (QXR) Tires, LT245/70R17 all-terrain, blackwall. Not available on models C*15543."
- SEO Ship Thru section-(VYS) Ship Thru for Models C*15**3 (MSRP = $100.00), updated footnote to read "Not available with RPO (LU3) Engine, 4300 V6. Not available with RPO (QXR) Tires, LT245/70R17 all-terrain, blackwall. Not available on models C*15543."
- SEO Ship Thru section-(TGK) Solid Paint, updated footnote to read "Required with any SEO paint selection. May require an extended lead time. Not available on model C*15543."

Week of 5/29/2006

Effective 5/29/2006, the following changes will be made to the Vehicle Order Guide:

- Mechanical section-(VYU) Snow Plow Prep Package, changed extended description to read "includes 10-amp power for backup and roof emergency light, (KW1) 160-amp alternator, high-flow front bumper, roof beacon lamp provisions with switch on the instrument panel, forward lamp wiring harness, 1.65" (42 mm) access hole with grommet in front of dash panel, instrument panel jumper wiring harness for electric trailer brake controller, (K47) high-capacity air cleaner and (NZZ) Skid Plate Package".

Week of 5/22/2006

Effective 5/22/2006, the following changes will be made to the Vehicle Order Guide:

- Exterior section-(PDG) Texas/Oklahoma/Louisiana LS Package, changed footnote #1 to read "Requires C*15703 or C*15903 models. Requires delivery to residents of TX/OK/LA and select counties in New Mexico and Kansas. Requires and only available with (LU3) Vortec 4300 V6 MFI engine. Not available with Fleet or Government order types.".
- Exterior section-(PDJ) South-West LT Extended and Crew Cab Package, changed footnote #1 to read "Requires CC15753, CC15553 or CC15543 models. Not available with (**2) leather seating surfaces. Not available with Fleet or Government order types. Requires delivery to residents in TX/OK/LA/CA/FL/NM/NV/AZ and select counties in Mississippi, Alabama, Georgia and Kansas. Delivery outside of these parameters will result in a charge back to the ORIGINAL invoicing dealer.".
- Mechanical section-(L59) Engine, Vortec 5300 V8 SFI FlexFuel, changed footnote #2 to read "Requires C*15543, C*15753 or C*15953 Models. - Standard on CC15753, C*15543 and C*15953 Models.".
- OnStar Fleet Options section-please review entire section as many changes have been made.

Week of 5/15/2006

Effective 5/15/2006, the following changes will be made to the Vehicle Order Guide:

- Mechanical section-(PDU) Light Duty Power Package, changed footnote #3 to read "Not available with (Z83) Solid Smooth Ride Suspension Package. On C*15753 and C*15543 Models, requires (B2E) Silverado Limited Edition.".
- Mechanical section-(Z71) Suspension Package, Off-Road, changed footnote #1 to read "Requires 4x4 models. Requires (PDX) Extended Cab Value Package, (PDZ) Crew Cab Value Package or (PDU) Light Duty Power Package and (QJM) P265/70R17 on-/off-road White outlined-letter tires or (QJP) P265/70R17 on-/off-road blackwall tires. Also available with (QXR) Tires, LT245/70R17 all-terrain, blackwall on Fleet and Government Orders on CK15*03 and CK15753 Models. If (B2E) Silverado Limited Edition is ordered with (Z71), 4WD (B2E) Silverado Limited Edition models build with code Z71 however Z71 used with B2E will NOT include: (B71) Wheel flares, (NZZ) Skid Plate Package, 1.81" Front shocks, 1.81" Rear shocks or Z71 Decals on Pickup Box.
- SEO Ship Thru section-(VPV) Ship Thru for Kerr Industries (MSRP = W/A) deleted option entirely.
- SEO Ship Thru section-(VCM) Ship Thru for Models C*15*03 (MSRP = $225.00) deleted option entirely.
- SEO Ship Thru section-(VDB) Ship Thru for Models C*15*03 (MSRP = $165.00) deleted option entirely.
- SEO Ship Thru section-(VTH) Ship Thru for Models C*15*03 (MSRP = $145.00) deleted option entirely.
- SEO Ship Thru section-(VGH) Ship Thru for Models C*15**3, updated footnote 1 to read "Not available with RPO (LU3) Engine, 4300 V6. Not available with RPO (QXR) Tires, LT245/70R17 all-terrain, blackwall. Not available with C*15553, CC15753 or C*15543 models. Not available with RPO (L59) Vortec 5300 V8 SFI FlexFuel engine unless combined with C*15903 or C*15953 models."

Week of 5/8/2006

Effective 5/8/2006, the following changes will be made to the Vehicle Order Guide:

- SEO Ship Thru section- (6P3) Updated main description and price to read "Camper Mirrors, power adjustable glass, manual extendable, non-heated (MSRP = $238.00)" Added extended description to read "Alternative mirrors replacing mirrors that are standard with SEO 5B5 Power windows and mirrors on a base decor truck. Right and left hand outside mirrors consisting of 50 square inch flat mirror surface positioned over a 20 square inch convex mirror surface with a common head. Includes turn signals in mirror glass."

Week of 5/1/2006

Effective 5/1/2006, the following changes will be made to the Vehicle Order Guide:

- Interior section-(DNH) Regular production accessory, Underseat storage, changed footnote to read "Requires Extended Cab models. Not available with C*15553 models. With CK15953 models not available with (BVS) Regular production accessory, chrome-plated, tubular, assist steps, (BVE) Regular production accessory, Black-coated, tubular assist steps, or (EN6) Regular production accessory, hard, Black tonneau cover. For additional GM Accessory Offerings and Installation, please contact your local GM Accessory Distributor Installer (ADI).".
- Exterior section-(BVE) Regular production accessory, Assist steps, chrome plated tubular, added footnote #1 that reads "For additional GM Accessory Offerings and Installation, please contact your local GM Accessory Distributor Installer (ADI)." and applies to all packages.
- Exterior section-(BVS) Regular production accessory, Assist steps, Black coated tubular, added footnote #1 that reads "For additional GM Accessory Offerings and Installation, please contact your local GM Accessory Distributor Installer (ADI)." and applies to all packages.
- Exterior section-(BVU) Regular production accessory, Assist steps, molded plastic, changed footnote #1 to read "Requires Crew Cab models. For additional GM Accessory Offerings and Installation, please contact your local GM Accessory Distributor Installer (ADI)." and applies to 2LS, 1LT, 2LT and 3LT packages.
- Exterior section-(PPB) Regular production accessory, Pickup bed extender, brushed aluminum, added footnote #1 that reads "For additional GM Accessory Offerings and Installation, please contact your local GM Accessory Distributor Installer (ADI)." and applies to all packages.
- Exterior section-(PUB) Regular production accessory, Pickup bed protectors, Top side rails, changed footnote #1 to read "Not available with C*15543 or C*15553 models, (E95) Regular production accessory, soft, Black tonneau cover, or (EN6)

Regular production accessory, hard, Black tonneau cover. For additional GM Accessory Offerings and Installation, please contact your local GM Accessory Distributor Installer (ADI).".

- Exterior section-(E95) Regular production accessory, Tonneau cover, Black, soft, changed footnote to read "Not available with (PUB) Regular production accessory, top side rail, Black-molded pickup bed protectors. For additional GM Accessory Offerings and Installation, please contact your local GM Accessory Distributor Installer (ADI).".
- Exterior section-(EN6) Regular production accessory, Tonneau cover, Black, hard, changed footnote to read "Not available with (PUB) Regular production accessory, Top side rail, Black molded, pickup bed protectors. When ordered on CK15953 models, not available with (DNH) Regular production accessory, rear, lockable underseat storage, (BVE) Regular production accessory, Assist steps, chrome-plated, tubular assist steps or (BVS) Regular production accessory, Black-coated, tubular assist steps. For additional GM Accessory Offerings and Installation, please contact your local GM Accessory Distributor Installer (ADI).".
- Mechanical section-(NHT) Vortec Max Performance Pack, changed footnote to read "Requires C*15753 or C*15543 models. Also, includes (NP8) electronic Autotrac transfer case on CK15753 and CK15543 models. Requires (P25) 4 - 17" x 7.5" (43.2 cm x 19.1 cm) 6-lug polished cast aluminum wheels, (QJM) P265/70R17 on-/off-road White outlined-letter tires or (QJP) P265/70R17 on-/off-road blackwall tires. Option content within this package may not be substituted or deleted. - Not available with (ZY2) two-tone paint, (NW7) electronic traction assist system, (Z71) Off-Road Suspension Package, (Z83) Solid Smooth Ride Suspension package, (Z85) Handling/Trailering Suspension Package or any (SEO) Special Equipment Options.

Week of 4/24/2006

Effective 4/24/2006, the following changes will be made to the Vehicle Order Guide:

- Interior section-(U2K) XM Satellite Radio, changed extended description to read " With a wide variety of programming, XM has something to excite any driver. Whether you want to be entertained or informed, to laugh, think, or sing, XM has the perfect channel for you - coast-to-coast, and in digital-quality sound. 3 trial months - no obligation". Also, changed footnote to read "Available in the 48 contiguous United States. Required $12.95 monthly subscription sold separately. All fees and programming subject to change. Subscription subject to customer agreement. For more information, visit gm.xmradio.com.".

Week of 4/17/2006

Effective 4/17/2006, the following changes will be made to the Vehicle Order Guide:

- Interior section-(UC6) Audio system, AM/FM stereo with 6-disc CD changer, changed extended description to read " seek-and-scan, digital clock, auto-tone control, Radio Data System (RDS), speed-compensated volume, and TheftLock". Also, changed symbol from "A1" to "A" in 1LT column and deleted footnote #1 entirely.
- Exterior section-(PDX) Classic Package #1, changed Bold description to read "Extended Cab Value Package".
- Exterior section-(PDZ) Classic Package #2, changed Bold description to read "Crew Cab Value Package".
- Exterior section-(R6S) Classic Package discount not desired, changed description to read "Value Package discount not desired". Also, changed footnote to read "Requires C*15753 or C*15543 Models. On C*15753 Models, all (PDU) Light Duty Power Package orders without (P25) 6-lug polished cast aluminum wheels or (BVE) Regular production accessory, Assist steps, chrome plated tubular must order (PDX) Extended Cab Value Package or (R6S) Value Package discount not desired. On C*15543 Models, all (PDU) Light Duty Power Package orders without (P25) 6-lug polished cast aluminum wheels or (PPB) aluminum pickup bed extender must order (PDZ) Crew Cab Value Package or (R6S) Value Package discount not desired.
- Mechanical section-(PDU) Light Duty Power Package, changed footnote #3 to read "Not available with (Z83) Solid Smooth Ride Suspension Package. On C*15753 Models, all (PDU) orders without (P25) 6-lug polished cast aluminum wheels or (BVE) Regular production accessory, Assist steps, chrome plated tubular must order (PDX) Extended Cab Value Package or (R6S) Value Package Discount not desired. On C*15543 Models, all (PDU) orders without (P25) 6-lug polished cast aluminum wheels or (PPB) aluminum pickup bed extender must order (PDZ) Crew Cab Value Package or (R6S) Value Package Discount not desired.

Week of 4/10/2006

Effective 4/10/2006, the following changes will be made to the Vehicle Order Guide:

- Exterior section-(PDX) Classic Package #1, changed footnote #1 to read "Requires C*15753 Models. Not available with (NHT) Vortec Max Performance Pack, (PDU) Light Duty Power Package, (B2E) Silverado Limited Edition, or (B4V) Silverado Performance Edition.".
- Exterior section-(PDZ) Classic Package #2, changed extended description to read "includes (L59) Vortec 5300 V8 SFI FlexFuel engine, (G80) heavy-duty automatic locking rear differential, (Z82) heavy-duty trailering equipment, (P25) 4 - 17" x 7.5" (43.2 cm x 19.1 cm) 6-lug polished cast aluminum wheels and (PPB) aluminum pickup bed extender". Also, changed footnote #1 to read "Requires Crew Cab Models. Not available with (NHT) Vortec Max Performance Pack, (PDU) Light Duty Power Package, (B2E) Silverado Limited Edition, or (B4V) Silverado Performance Edition.".
- Exterior section-Added (R6S) Classic Package discount not desired. It is available on 1LT only with a footnote that reads "Requires C*15753 or C*15543 Models. On C*15753 Models, all (PDU) Light Duty Power Package orders without (P25) 6-lug polished cast aluminum wheels or (BVE) Regular production accessory, Assist steps, chrome plated tubular must order (PDX) Classic Package #1 or (R6S) Classic Package Discount not desired. On C*15543 Models, all (PDU) Light Duty Power Package orders without (P25) 6-lug polished cast aluminum wheels or (PPB) aluminum pickup bed extender must order (PDZ) Classic Package #2 or (R6S) Classic Package Discount not desired".
- Mechanical section-(LM7) Engine, Vortec 5300 V8 SFI, changed footnote #2 to read "Not available with CK15753 Models. On C*15703, C*159*3 and CC15753 Models, requires (NW7) Traction assist system, electronic, SEO (8B0) Batteries, 770 CCA with a 600 CCA auxiliary or SEO (8S3) Backup alarm.".
- Mechanical section-(PDU) Light Duty Power Package, added footnote #3 that reads "Not available with (Z83) Solid Smooth Ride Suspension Package. On C*15753 Models, all (PDU) orders without (P25) 6-lug polished cast aluminum wheels or (BVE) Regular production accessory, Assist steps, chrome plated tubular must order (PDX) Classic Package #1 or (R6S) Classic Package Discount not desired. On C*15543 Models, all (PDU) orders without (P25) 6-lug polished cast aluminum wheels or (PPB) aluminum pickup bed extender must order (PDZ) Classic Package #2 or (R6S) Classic Package Discount not desired." and applies to 1LT column. Also, changed symbol from "A2" to "A" in 2LT and 3LT columns.
- SEO Ship Thru section-(VAB) Ship Thru, added footnote 1 on all equipment groups to read "Not available with RPO (LU3) Engine, 4300 V6. Not available with RPO (QXR) Tires, LT245/70R17 all-terrain, blackwall."
- SEO Ship Thru section-(VAY) Ship Thru, changed footnote 1 to read "Not available with RPO (LU3) Engine, 4300 V6. Not available with RPO (QXR) Tires, LT245/70R17 all-terrain, blackwall."
- SEO Ship Thru section-(VBK) Ship Thru, changed footnote 1 to read "Not available with RPO (LU3) Engine, 4300 V6. Not available with RPO (QXR) Tires, LT245/70R17 all-terrain, blackwall."
- SEO Ship Thru section-(VGH) Ship Thru, changed footnote 1 to read "Not available with RPO (LU3) Engine, 4300 V6. Not available with RPO (QXR) Tires, LT245/70R17 all-terrain, blackwall."
- SEO Ship Thru section-(VGZ) Ship Thru, changed footnote 1 to read "Not available with RPO (LU3) Engine, 4300 V6. Not available with RPO (QXR) Tires, LT245/70R17 all-terrain, blackwall."
- SEO Ship Thru section-(VWS) Ship Thru, changed footnote 1 to read "Not available with RPO (LU3) Engine, 4300 V6. Not available with RPO (QXR) Tires, LT245/70R17 all-terrain, blackwall."
- SEO Ship Thru section-(VYC) Ship Thru, changed footnote 1 to read "Not available with RPO (LU3) Engine, 4300 V6. Not available with RPO (QXR) Tires, LT245/70R17 all-terrain, blackwall."

Week of 4/10/2006

Effective 4/10/2006, the following changes will be made to the Vehicle Order Guide:

- SEO Ship Thru section-(VYS) Ship Thru, changed footnote 1 to read "Not available with RPO (LU3) Engine, 4300 V6. Not available with RPO (QXR) Tires, LT245/70R17 all-terrain, blackwall."
- SEO Ship Thru section-Added (B9V) Ship Thru for Models C*15753 and C*15543 (MSRP = $67.00) Produced in Oshawa Assembly and shipped to Kerr Industries in Oshawa, Ontario and returned to Oshawa Assembly for shipping to final destination. It is available on all equipment groups.

Week of 4/3/2006

Effective 4/3/2006, the following changes will be made to the Vehicle Order Guide:

- Interior section-(CJ3) Air conditioning, dual-zone manual climate control, changed symbol from "S" to "A1" in 1WT column.

Also, added footnote that reads "Standard on Extended Cab Models.". Also moved RPO from Reference only column to Free Flow column.

- Interior section-(C42) Air conditioning delete, changed symbol from "A1" to "S1". Also moved RPO from Free Flow column to Reference only column.
- Solid Paint ZY1 Color and Trim section-Changed Footnote #3 to read "Requires LT1, LT2, LT3 or Crew Cab LS Models.".

S = Standard Equipment A = Available – (dashes) = Not Available D = ADI Available
■ = Included in Equipment Group □ = Included in Equipment Group but upgradeable

*Indicates availability of feature on multiple models. For example, it indicates feature availability on 2WD and 4WD Models or Rear wheel drive and All-wheel drive Models.

Codes listed in the shaded column titled Ref. Only RPO Code are for internal use only and should not be ordered.

Free Flow RPO Code	Ref. Only RPO Code	Description 1 - Equipment group 1LT, 2LT and 3LT available on CC15743 and CK15743 Models.	Crew Cab LT1 1LT[1]	 LT2 2LT[1]	 LT3 3LT[1]
		Air bags, frontal, driver and right-front passenger **1 - Always use safety belts and the correct child restraints for your child's age and size, even in vehicles equipped with air bags. Children are safer when properly secured in a rear seat. See the vehicle's Owner's Manual and child safety seat instructions for more safety information.**	S[1]	S[1]	S[1]
	CJ3	**Air conditioning**, dual-zone manual climate control with individual climate settings for driver and right-front passenger	S	--	--
		Assist handles, front passenger and rear outboard	S	S	S
	UB0	**Audio system**, AM/FM stereo with CD player, seek-and-scan, digital clock, auto-tone control, Radio Data System (RDS), speed-compensated volume and 6 speakers	S	S	--
	UQ3	**Audio system feature**, 6-speaker system	S	--	--
		Cigarette lighter, on instrument panel	S	S	S
		Coat hooks, driver- and passenger-side rear	S	S	S
	DK7	**Console**, overhead mini with map lights **1 - Not available with (CF5) power sunroof.**	S	S[1]	S[1]
	K34	**Cruise control**, electronic with set and resume speed	S	S	S
		Cup holders, front and rear	S	S	S
	C49	**Defogger**, rear-window electric **1 - Not available with (A28) sliding rear window.**	S[1]	S[1]	S[1]
	AU3	**Door locks**, power	S	S	S
		Driver Information Center that monitors numerous different systems depending on vehicle equipment	S	S	S
	B30	**Floor covering**, color-keyed carpeting with rubberized vinyl floor mats **1 - May be substituted with (BG9) rubberized-vinyl floor covering.**	S[1]	S	S
		Instrumentation, analog with speedometer, odometer with trip odometer, fuel level, voltmeter, engine temperature, oil pressure and tachometer	S	S	S
		Lighting, interior with dome and reading lights, illuminated entry feature and backlit instrument panel switches	S	S	S
	DF5	**Mirror**, inside rearview auto-dimming with 8-point compass and outside temperature display	S	S	S
		Power outlets, 2 auxiliary instrument panel-mounted with covers, 12-volt	S	S	S
	AU0	**Remote Keyless Entry**, with 2 transmitters, panic button and content theft alarm	S	S	S

Free Flow RPO Code	Ref. Only RPO Code	Description 1 - Equipment group 1LT, 2LT and 3LT available on CC15743 and CK15743 Models.	Crew Cab LT1 1LT[1]	 LT2 2LT[1]	 LT3 3LT[1]
	**D	**Seat trim**, Custom Cloth	S	S	--
	AE7	**Seats**, front 40/20/40 split-bench, 3-passenger, driver and front passenger manual reclining, center fold-down armrest with storage, adjustable outboard head restraints and storage pockets	S	--	--
		Seats, rear 60/40 split-bench, 3-passenger, flat-folding (includes child seat top tether anchor)	S	S	S
		Steering column, Tilt-Wheel, adjustable with brake/transmission shift interlock	S	S	S
	NP5	**Steering wheel**, leather-wrapped, Black with theft-deterrent locking feature	S	S	S
		Theft-deterrent system, PASSlock II	S	S	S
		Tools, mechanical jack and wheel wrench located in back of cab	S	S	S
		Visors, driver and front passenger, padded with cloth trim, extenders, pocket on driver-side and vanity mirror on passenger-side, Shale-colored	S	S	S
		Warning tones, headlamp on, key-in-ignition, driver and passenger buckle up reminder and turn signal on	S	S	S
	A31	**Windows**, power with driver and front passenger Express-Down	S	S	S
		Air dam, Gray	S	S	S
	VG3	**Bumper**, front chrome with Gray lower	S	S	S
	VB3	**Bumper**, rear chrome, step-style with pad	S	S	S
		Daytime Running Lamps, with automatic exterior lamp control	S	S	S
	AJ1	**Glass**, Solar-Ray deep-tinted (all windows except light-tinted glass on windshield, driver- and front passenger-side glass) (includes light-tinted rear window)	S	S	S
	TR3	**Grille**, chrome surround with chrome accent bar	S	S	S
		Headlamps, dual halogen composite with automatic exterior lamp control and flash-to-pass feature	S	S	S
		Lamps, dual cargo area lamps	S	S	S
	DL8	**Mirrors**, outside heated power-adjustable, Black, manual-folding	S	S	--
	ZY1	**Paint**, solid	S	S	S
	E63	**Pickup box**, Fleetside	S	S	S
	V76	**Recovery hooks**, front, frame-mounted	S	S	S
		Tire carrier, lockable outside spare, winch-type mounted under frame at rear	S	S	S
	QIZ	**Tires**, LT245/75R16E all-season, blackwall	S	S	S
	PY2	**Wheels**, 4 - 16" x 6.5" (40.6 cm x 16.5 cm) 8-lug chrome-styled steel, includes chrome center caps and steel spare	S	S	--
	B71	**Wheel flares**, front and rear	S	S	S

2007 Chevrolet Truck Silverado 1500HD Classic — STANDARD EQUIPMENT

Free Flow RPO Code	Ref. Only RPO Code	Description 1 - Equipment group 1LT, 2LT and 3LT available on CC15743 and CK15743 Models.	Crew Cab LT1 1LT[1]	 LT2 2LT[1]	 LT3 3LT[1]
		Wipers, front intermittent wet-arm with pulse washers	S	S	S
	K68	**Alternator**, 105 amps	S	S	S
		Battery, heavy-duty 600 cold-cranking amps, maintenance-free with rundown protection and retained accessory power	S	S	S
		Brakes, 4-wheel antilock, 4-wheel disc	S	S	S
	KC4	**Cooling**, external engine oil cooler, heavy-duty air-to-oil, integral to driver-side of radiator tank	S	S	S
	KNP	**Cooling**, auxiliary transmission oil cooler, heavy-duty air-to-oil	S	S	S
		Cooling, internal transmission oil cooler, water-to-oil, integral to driver-side of radiator tank	S	S	S
	LQ4	**Engine**, Vortec 6.0L V8 SFI (300 hp [223.8 kW] @ 4400 rpm, 360 lb-ft of torque [486.6 N-m] @ 4000 rpm)	S	S	S
		Exhaust, aluminized stainless-steel muffler and tailpipe	S	S	S
		Frame, hydroformed ladder-type	S	S	S
	C6P	**GVWR**, 8600 lbs. (3901 kg) (must specify)	S	S	S
	GT4	**Rear axle**, 3.73 ratio	S	S	S
		Steering, power	S	S	S
		Suspension, front independent with torsion bar and stabilizer bar	S	S	S
		Suspension, rear 2-stage multi-leaf springs, semi-elliptic	S	S	S
	Z85	**Suspension Package**, Handling/Trailering, heavy-duty, includes 36 mm piston monotube shocks	S	S	S
	NP8	**Transfer case**, electronic Autotrac with push-button controls 1 - Standard with 4x4 models only.	S[1]	S[1]	S[1]
	MT1	**Transmission**, 4-speed automatic, heavy-duty, electronically controlled with overdrive and tow/haul mode 1 - When (Z82) heavy-duty trailering equipment is ordered, transmission temperature gauge is included.	S[1]	S[1]	S[1]

2007 Chevrolet Truck Silverado 1500HD Classic — EQUIPMENT GROUPS

S = Standard Equipment A = Available – (dashes) = Not Available D = ADI Available
■ = Included in Equipment Group □ = Included in Equipment Group but upgradeable

No deletions allowed to Equipment Groups. Additional options may be added; check ordering information section for compatibility.

*Indicates availability of feature on multiple models. For example, it indicates feature availability on 2WD and 4WD Models or Rear wheel drive and All-wheel drive Models.

Codes listed in the shaded column titled Ref. Only RPO Code are for internal use only and should not be ordered.

Free Flow RPO Code	Ref. Only RPO Code	Description 1 - Equipment group 1LT, 2LT and 3LT available on CC15743 and CK15743 Models.	Crew Cab LT1 1LT[1]	 LT2 2LT[1]	 LT3 3LT[1]
CJ2		**Air conditioning**, dual-zone automatic climate control with individual climate settings for driver and right-front passenger	A	■	■
UC6		**Audio system**, AM/FM stereo with 6-disc CD changer, seek-and-scan, digital clock, auto-tone control, Radio Data System (RDS), speed-compensated volume and TheftLock	A	A	■
	UQ7	**Audio system feature**, Bose premium speaker system with sub-woofer in center console 1 - Included and only available with (A95) front reclining bucket seats.	A[1]	■	■
	UK6	**Audio system controls**, rear with 2 headphone jacks (headphones not included), power outlet and controls for volume, station selection and media 1 - Included and only available with (A95) front reclining bucket seats.	A[1]	■	■
	D07	**Console**, floor with storage compartment and dual cup holders 1 - Included and only available with (A95) front reclining bucket seats.	A[1]	■	■
	**2	**Seat trim**, leather-appointed front and rear	A	A	■
A95		**Seats**, front bucket, includes (AG1) 6-way power driver seat adjuster, front passenger manual recline, adjustable outboard head restraints, inboard armrests and storage pockets 1 - Requires Fleet and Government order types only. Includes (D07) floor console, (UQ7) Bose Premium speaker system and (UK6) rear audio controls.	A[1]	■	--
	AN3	**Seats**, front bucket, includes 10-way power driver and front passenger seat adjusters, 2-way power lumbar control, heated seat cushions and seatbacks, 2-position driver memory, adjustable outboard head restraints, floor console, dual inboard armrests and storage pockets	--	--	■
AG1		**Seat adjuster**, driver 6-way power 1 - Included with (**2) Seat trim, leather appointed, front and rear. Included with (A95) front reclining bucket seats. 2 - With (AN3) front full-feature bucket seats, includes 10-way power seat adjusters.	A[1]	■	■[2]
	AG2	**Seat adjuster**, front passenger 10-way power 1 - Included and only available with (AN3) front full-feature bucket seats.	--	--	■[1]
UK3		**Steering wheel controls**, mounted audio and Driver Information Center controls which provides access to enhanced Driver Information Center features and information	A	■	■
T96		**Fog lamps**, front, halogen 1 - With 2WD models requires (V76) front frame-mounted recovery hooks.	A[1]	■	■

Free Flow RPO Code	Ref. Only RPO Code	Description 1 - Equipment group 1LT, 2LT and 3LT available on CC15743 and CK15743 Models.	Crew Cab LT1 1LT[1]	 LT2 2LT[1]	 LT3 3LT[1]
DL3		**Mirrors**, outside heated power-adjustable, power-folding and driver-side auto-dimming, Black with integrated turn signal indicators **1 - Curb-tilt feature requires (UK3) steering-wheel mounted audio and Driver Information Center (DIC) controls.** **2 - Upgradeable to (DPN) outside vertical camper mirrors. Includes curb-tilt when (UK3) steering-wheel mounted audio controls is ordered.**	A[1]	A[1]	□[2]
	B85	**Moldings**, color-keyed bodyside with bright inserts **1 - Refer to Color and Trim Chart for compatibility.**	■[1]	■[1]	■[1]
PY0		**Wheels**, 4 - 16" x 6.5" (40.6 cm x 16.5 cm) 8-lug polished forged aluminum, includes chrome center caps and steel spare	A	A	■

S = Standard Equipment A = Available – (dashes) = Not Available D = ADI Available
■ = Included in Equipment Group □ = Included in Equipment Group but upgradeable

No deletions allowed to Equipment Groups. Additional options may be added; check ordering information section for compatibility.

*Indicates availability of feature on multiple models. For example, it indicates feature availability on 2WD and 4WD Models or Rear wheel drive and All-wheel drive Models.

Codes listed in the shaded column titled Ref. Only RPO Code are for internal use only and should not be ordered.

Free Flow RPO Code	Ref. Only RPO Code	Description 1 - Equipment group 1LT, 2LT and 3LT available on CC15743 and CK15743 Models.	Crew Cab LT1 1LT[1]	 LT2 2LT[1]	 LT3 3LT[1]
CJ2		**Air conditioning**, dual-zone automatic climate control with individual climate settings for driver and right-front passenger	A	■	■
UC6		**Audio system**, AM/FM stereo with 6-disc CD changer, seek-and-scan, digital clock, auto-tone control, Radio Data System (RDS), speed-compensated volume and TheftLock	A	A	■
	UQ7	**Audio system feature**, Bose premium speaker system with sub-woofer in center console **1 - Included and only available with (A95) front reclining bucket seats.**	A[1]	■	■
	UK6	**Audio system controls**, rear with 2 headphone jacks (headphones not included), power outlet and controls for volume, station selection and media **1 - Included and only available with (A95) front reclining bucket seats.**	A[1]	■	■
	D07	**Console**, floor with storage compartment and dual cup holders **1 - Included and only available with (A95) front reclining bucket seats.**	A[1]	■	■
	**2	**Seat trim**, leather-appointed front and rear	A	A	■
A95		**Seats**, front bucket, includes (AG1) 6-way power driver seat adjuster, front passenger manual recline, adjustable outboard head restraints, inboard armrests and storage pockets **1 - Requires Fleet and Government order types only. Includes (D07) floor console, (UQ7) Bose Premium speaker system and (UK6) rear audio controls.**	A[1]	■	--
	AN3	**Seats**, front bucket, includes 10-way power driver and front passenger seat adjusters, 2-way power lumbar control, heated seat cushions and seatbacks, 2-position driver memory, adjustable outboard head restraints, floor console, dual inboard armrests and storage pockets	--	--	■
AG1		**Seat adjuster**, driver 6-way power **1 - Included with (**2) Seat trim, leather appointed, front and rear. Included with (A95) front reclining bucket seats.** **2 - With (AN3) front full-feature bucket seats. Includes 10-way power seat adjusters.**	A[1]	■	■[2]
	AG2	**Seat adjuster**, front passenger 10-way power **1 - Included and only available with (AN3) front full-feature bucket seats.**	--	--	■[1]
UK3		**Steering wheel controls**, mounted audio and Driver Information Center controls which provides access to enhanced Driver Information Center features and information	A	■	■
T96		**Fog lamps**, front, halogen **1 - With 2WD models requires (V76) front frame-mounted recovery hooks.**	A[1]	■	■

Free Flow RPO Code	Ref. Only RPO Code	Description 1 - Equipment group 1LT, 2LT and 3LT available on CC15743 and CK15743 Models.	Crew Cab LT1 1LT[1]	 LT2 2LT[1]	 LT3 3LT[1]
DL3		**Mirrors**, outside heated power-adjustable, power-folding and driver-side auto-dimming, Black with integrated turn signal indicators 1 - Curb-tilt feature requires (UK3) steering-wheel mounted audio and Driver Information Center (DIC) controls. 2 - Upgradeable to (DPN) outside vertical camper mirrors. Includes curb-tilt when (UK3) steering-wheel mounted audio controls is ordered.	A[1]	A[1]	□[2]
	B85	**Moldings**, color-keyed bodyside with bright inserts 1 - Refer to Color and Trim Chart for compatibility.	■[1]	■[1]	■[1]
PY0		**Wheels**, 4 - 16" x 6.5" (40.6 cm x 16.5 cm) 8-lug polished forged aluminum, includes chrome center caps and steel spare	A	A	■

ADDITIONAL OPTIONS

Free Flow RPO Code	Ref. Only RPO Code	Description 1 - Equipment group 1LT, 2LT and 3LT available on CC15743 and CK15743 Models.	Crew Cab LT1 1LT[1]	 LT2 2LT[1]	 LT3 3LT[1]
CJ2		**Air conditioning**, dual-zone automatic climate control with individual climate settings for driver and right-front passenger	A	■	■
UC6		**Audio system**, AM/FM stereo with 6-disc CD changer, seek-and-scan, digital clock, auto-tone control, Radio Data System (RDS), speed-compensated volume and TheftLock	A	A	■
U42		**Entertainment system**, rear seat DVD player with LCD display and 2 sets of wireless headphones	--	A	A
BG9		**Floor covering**, Black rubberized-vinyl 1 - Not available with (922) Medium Gray leather seating surfaces.	A[1]	--	--
UE1		**OnStar**, 1-year of Safe and Sound plan. Includes Automatic Notification of Air Bag Deployment, Stolen Vehicle Location Assistance, Emergency Services, Roadside Assistance, Remote Door Unlock, OnStar Vehicle Diagnostics, Hands-Free Calling, AccidentAssist and Remote Horn & Lights 1 - OnStar services require vehicle electrical system (including battery), wireless service and GPS satellite signals to be available and operating for features to function properly. OnStar acts as a link to existing emergency service providers. OnStar Vehicle Diagnostics available on most 2004 MY and newer GM vehicles. Diagnostic capability varies by model. Visit onstar.com for system limitations and details. Requires (UK3) steering-wheel mounted audio controls. Not available with a ship-to of Puerto Rico or the Virgin Islands.	A[1]	A[1]	A[1]
PDB		**OnStar Plus Package**, includes (U2K) XM Satellite Radio, (UE1) OnStar and (UK3) steering-wheel mounted audio controls 1 - Package does not include (U2K) XM Satellite Radio when ordered outside the 48 contiguous United States. Not available with a ship-to of Puerto Rico or the Virgin Islands.	A[1]	A[1]	A[1]
R6Q		**OnStar Plus Package discount not desired** 1 - Required when content within option package is ordered and entire package is not desired.	A[1]	A[1]	A[1]

ADDITIONAL OPTIONS

Free Flow RPO Code	Ref. Only RPO Code	Description 1 - Equipment group 1LT, 2LT and 3LT available on CC15743 and CK15743 Models.	Crew Cab LT1 1LT[1]	 LT2 2LT[1]	 LT3 3LT[1]
A95		**Seats**, front bucket, includes (AG1) 6-way power driver seat adjuster, front passenger manual recline, adjustable outboard head restraints, inboard armrests and storage pockets 1 - Requires Fleet and Government order types only. Includes (D07) floor console, (UQ7) Bose Premium speaker system and (UK6) rear audio controls.	A[1]	■	--
AG1		**Seat adjuster**, driver 6-way power 1 - Included with (**2) Seat trim, leather appointed, front and rear. Included with (A95) front reclining bucket seats. 2 - With (AN3) front full-feature bucket seats, includes 10-way power seat adjusters.	A[1]	■	■[2]
UK3		**Steering wheel controls**, mounted audio and Driver Information Center controls which provides access to enhanced Driver Information Center features and information	A	■	■
CF5		**Sunroof**, power, tilt-sliding with express-open and wind deflector, includes (UG1) Universal Home Remote	--	A	A
A28		**Window**, manual rear-sliding, deep-tinted 1 - Deletes (C49) rear-window defogger when ordered.	A[1]	A[1]	A[1]
U2K		**XM Satellite Radio.** With a wide variety of programming, XM has something to excite any driver. Whether you want to be entertained or informed, to laugh, think, or sing, XM has the perfect channel for you - coast-to-coast, and in digital-quality sound. 3 trial months - no obligation 1 - Available in the 48 contiguous United States. Required $12.95 monthly subscription sold separately. All fees and programming subject to change. Subscription subject to customer agreement. For more information, visit gm.xmradio.com.	A[1]	A[1]	A[1]
T96		**Fog lamps**, front, halogen 1 - With 2WD models requires (V76) front frame-mounted recovery hooks.	A[1]	■	■
U01		**Lamps**, Amber roof marker 1 - Not available with (YF5) California state emissions requirements.	A[1]	A[1]	A[1]
DL3		**Mirrors**, outside heated power-adjustable, power-folding and driver-side auto-dimming, Black with integrated turn signal indicators 1 - Curb-tilt feature requires (UK3) steering-wheel mounted audio and Driver Information Center (DIC) controls. 2 - Upgradeable to (DPN) outside vertical camper mirrors. Includes curb-tilt when (UK3) steering-wheel mounted audio controls is ordered.	A[1]	A[1]	□[2]
DPN		**Mirrors**, outside heated power-adjustable vertical camper manual-folding and extension, integrated turn signal indicators and lower convex spotter glass (convex glass is not heated)	A	A	A
BVE		**Regular production accessory**, Assist steps, chrome plated tubular, stainless steel 1 - For additional GM Accessory Offerings and Installation, please contact your local GM Accessory Distributor Installer (ADI).	A/D[1]	A/D[1]	A/D[1]

ADDITIONAL OPTIONS

Free Flow RPO Code	Ref. Only RPO Code	Description 1 - Equipment group 1LT, 2LT and 3LT available on CC15743 and CK15743 Models.	Crew Cab LT1 1LT[1]	 LT2 2LT[1]	 LT3 3LT[1]
BVS		**Regular production accessory**, Assist steps, Black coated tubular, stainless steel 1 - For additional GM Accessory Offerings and Installation, please contact your local GM Accessory Distributor Installer (ADI).	A/D[1]	A/D[1]	A/D[1]
PPB		**Regular production accessory**, Pickup bed extender, brushed aluminum 1 - For additional GM Accessory Offerings and Installation, please contact your local GM Accessory Distributor Installer (ADI).	A/D[1]	A/D[1]	A/D[1]
PUB		**Regular production accessory**, Pickup bed protectors, Top side rails, Black molded 1 - Not available with (E95) Regular production accessory, soft, Black tonneau cover or (EN6) Regular production accessory, hard, Black tonneau cover. For additional GM Accessory Offerings and Installation, please contact your local GM Accessory Distributor Installer (ADI).	A/D[1]	A/D[1]	A/D[1]
E95		**Regular production accessory**, Tonneau cover, Black, soft 1 - Not available with (PUB) Regular production accessory, top side rail, Black-molded, pickup bed protectors. For additional GM Accessory Offerings and Installation, please contact your local GM Accessory Distributor Installer (ADI).	A/D[1]	A/D[1]	A/D[1]
EN6		**Regular production accessory**, Tonneau cover, Black, hard, folding, lockable 1 - Not available with (PUB) Regular production accessory, top side rail, Black-molded, pickup bed protectors. For additional GM Accessory Offerings and Installation, please contact your local GM Accessory Distributor Installer (ADI).	A/D[1]	A/D[1]	A/D[1]
SAF		**Spare tire lock**, keyed cylinder lock that utilizes same key as ignition and door	A	A	A
QIW		**Tires**, LT245/75R16E on-/off-road, blackwall 1 - Includes (ZHH) LT245/75R16E all-season blackwall spare tire.	A[1]	A[1]	A[1]
PY0		**Wheels**, 4 - 16" x 6.5" (40.6 cm x 16.5 cm) 8-lug polished forged aluminum, includes chrome center caps and steel spare	A	A	■
K47		**Air cleaner**, high-capacity 1 - Included with (Z82) heavy-duty trailering equipment.	A[1]	A[1]	A[1]
KL5		**Alternative fuel conversions**, conversion-ready engine, includes internal modifications for operation with natural or propane gas	A	A	A
TP2		**Battery**, auxiliary heavy-duty 600 cold-cranking amps, maintenance-free	A	A	A
G80		**Differential**, heavy-duty automatic locking rear	A	A	A
YF5		**Emissions**, California state requirements	A	A	A
FE9		**Emissions**, Federal requirements	A	A	A
NE1		**Emissions**, Maine, Massachusetts, New York or Vermont state requirements	A	A	A

ADDITIONAL OPTIONS

Free Flow RPO Code	Ref. Only RPO Code	Description 1 - Equipment group 1LT, 2LT and 3LT available on CC15743 and CK15743 Models.	Crew Cab LT1 1LT[1]	 LT2 2LT[1]	 LT3 3LT[1]
NB8		**Emissions override**, California, Massachusetts or New York (for vehicles ordered by dealers in states of California, Massachusetts or New York with Federal emissions) 1 - Requires (FE9) Federal emissions requirements.	A[1]	A[1]	A[1]
NC7		**Emissions override**, Federal (for vehicles ordered by dealers in Federal emission states with California, New York, Vermont, Massachusetts or Maine emissions; may also be used by dealers in states of California, New York, Vermont, Massachusetts or Maine to order different state-specific emissions) 1 - Requires (YF5) California state emissions requirements or (NE1) New York, Vermont, Massachusetts or Maine state emissions requirements.	A[1]	A[1]	A[1]
K05		**Engine block heater**	A	A	A
GT5		**Rear axle**, 4.10 ratio	A	A	A
NZZ		**Skid Plate Package**, includes aluminum front underbody shield starting behind front bumper and running to first cross-member, protecting front underbody, oil pan, differential case and transfer case, frame-mounted shields 1 - Requires 4x4 models.	A[1]	A[1]	A[1]
Z82		**Trailering equipment**, heavy-duty, includes trailering hitch platform, 7-wire harness (harness includes wires for: park lamps, backup lamps, right turn, left turn, electric brake lead, battery and ground) with independent fused trailering circuits mated to a 7-way sealed connector, instrument panel jumper wiring harness for electric trailer brake controller and 1-way sealed connector for center high-mounted stop/brake lamp and (K47) high-capacity air cleaner	A	A	A
UY2		**Trailering wiring provisions**, for camper, fifth wheel and gooseneck trailer, includes additional 8-way wiring harness routed to front of pickup box and added 7-way sealed connector for the trailer harness 1 - Requires (Z82) heavy-duty trailering equipment.	A[1]	A[1]	A[1]

2007 Chevrolet Truck Silverado 1500HD Classic — PEG STAIRSTEP

S = Standard Equipment A = Available – (dashes) = Not Available D = ADI Available
■ = Included in Equipment Group □ = Included in Equipment Group but upgradeable

No deletions allowed to Equipment Groups. Additional options may be added; check ordering information section for compatibility.

*Indicates availability of feature on multiple models. For example, it indicates feature availability on 2WD and 4WD Models or Rear wheel drive and All-wheel drive Models.

Codes listed in the shaded column titled Ref. Only RPO Code are for internal use only and should not be ordered.

Free Flow RPO Code	Ref. Only RPO Code	Description 1 - Equipment group 1LT, 2LT and 3LT available on CC15743 and CK15743 Models.	Crew Cab LT1 1LT[1]	 LT2 2LT[1]	 LT3 3LT[1]
	B85	**Moldings**, color-keyed bodyside with bright inserts	■	■	■
CJ2		**Air conditioning**, dual-zone automatic climate control		■	■
	UK6	**Audio system controls**, rear		■	■
	UQ7	**Audio system feature**, Bose premium speaker system		■	■
	D07	**Console**, floor		■	■
T96		**Fog lamps**, front		■	■
AG1		**Seat adjuster**, driver 6-way power		■	■
UK3		**Steering wheel controls**, mounted audio and Driver Information Center controls		■	■
A95		**Seats**, front bucket		■	
UC6		**Audio system**, AM/FM stereo with 6-disc CD changer			■
DL3		**Mirrors**, outside heated power-adjustable, power-folding and driver-side auto-dimming, Black **1 - Upgradeable to (DPN) outside vertical camper mirrors. Includes curb-tilt when (UK3) steering-wheel mounted audio controls is ordered.**			□[1]
	AG2	**Seat adjuster**, front passenger 10-way power			■
	AN3	**Seats**, front bucket			■
	**2	**Seat trim**, leather-appointed front and rear			■
PY0		**Wheels**, 4 - 16" x 6.5" (40.6 cm x 16.5 cm) 8-lug polished forged aluminum			■

2007 Chevrolet Truck Silverado 1500HD Classic — INTERIOR

S = Standard Equipment A = Available – (dashes) = Not Available D = ADI Available
■ = Included in Equipment Group □ = Included in Equipment Group but upgradeable

*Indicates availability of feature on multiple models. For example, it indicates feature availability on 2WD and 4WD Models or Rear wheel drive and All-wheel drive Models.

Codes listed in the shaded column titled Ref. Only RPO Code are for internal use only and should not be ordered.

Free Flow RPO Code	Ref. Only RPO Code	Description 1 - Equipment group 1LT, 2LT and 3LT available on CC15743 and CK15743 Models.	Crew Cab LT1 1LT[1]	 LT2 2LT[1]	 LT3 3LT[1]
		Air bags, frontal, driver and right-front passenger **1 - Always use safety belts and the correct child restraints for your child's age and size, even in vehicles equipped with air bags. Children are safer when properly secured in a rear seat. See the vehicle's Owner's Manual and child safety seat instructions for more safety information.**	S[1]	S[1]	S[1]
	CJ3	**Air conditioning**, dual-zone manual climate control with individual climate settings for driver and right-front passenger	S	–	–
CJ2		**Air conditioning**, dual-zone automatic climate control with individual climate settings for driver and right-front passenger	A	■	■
		Assist handles, front passenger and rear outboard	S	S	S
	UB0	**Audio system**, AM/FM stereo with CD player, seek-and-scan, digital clock, auto-tone control, Radio Data System (RDS), speed-compensated volume and 6 speakers	S	S	–
UC6		**Audio system**, AM/FM stereo with 6-disc CD changer, seek-and-scan, digital clock, auto-tone control, Radio Data System (RDS), speed-compensated volume and TheftLock	A	A	■
	UQ3	**Audio system feature**, 6-speaker system	S	–	–
	UQ7	**Audio system feature**, Bose premium speaker system with sub-woofer in center console **1 - Included and only available with (A95) front reclining bucket seats.**	A[1]	■	■
	UK6	**Audio system controls**, rear with 2 headphone jacks (headphones not included), power outlet and controls for volume, station selection and media **1 - Included and only available with (A95) front reclining bucket seats.**	A[1]	■	■
		Cigarette lighter, on instrument panel	S	S	S
		Coat hooks, driver- and passenger-side rear	S	S	S
	D07	**Console**, floor with storage compartment and dual cup holders **1 - Included and only available with (A95) front reclining bucket seats.**	A[1]	■	■
	DK7	**Console**, overhead mini with map lights **1 - Not available with (CF5) power sunroof.**	S	S[1]	S[1]
	DK8	**Console**, overhead deluxe **1 - Included and only available with (CF5) power sunroof.**	–	A[1]	A[1]
	K34	**Cruise control**, electronic with set and resume speed	S	S	S
		Cup holders, front and rear	S	S	S
	C49	**Defogger**, rear-window electric **1 - Not available with (A28) sliding rear window.**	S[1]	S[1]	S[1]

Free Flow RPO Code	Ref. Only RPO Code	Description 1 - Equipment group 1LT, 2LT and 3LT available on CC15743 and CK15743 Models.	Crew Cab LT1 1LT[1]	 LT2 2LT[1]	 LT3 3LT[1]
	AU3	**Door locks**, power	S	S	S
		Driver Information Center that monitors numerous different systems depending on vehicle equipment	S	S	S
U42		**Entertainment system**, rear seat DVD player with LCD display and 2 sets of wireless headphones	--	A	A
	B30	**Floor covering**, color-keyed carpeting with rubberized vinyl floor mats 1 - May be substituted with (BG9) rubberized-vinyl floor covering.	S[1]	S	S
BG9		**Floor covering**, Black rubberized-vinyl 1 - Not available with (922) Medium Gray leather seating surfaces.	A[1]	--	--
		Instrumentation, analog with speedometer, odometer with trip odometer, fuel level, voltmeter, engine temperature, oil pressure and tachometer	S	S	S
		Lighting, interior with dome and reading lights, illuminated entry feature and backlit instrument panel switches	S	S	S
	DF5	**Mirror**, inside rearview auto-dimming with 8-point compass and outside temperature display	S	S	S
UE1		**OnStar**, 1-year of Safe and Sound plan. Includes Automatic Notification of Air Bag Deployment, Stolen Vehicle Location Assistance, Emergency Services, Roadside Assistance, Remote Door Unlock, OnStar Vehicle Diagnostics, Hands-Free Calling, AccidentAssist and Remote Horn & Lights 1 - OnStar services require vehicle electrical system (including battery), wireless service and GPS satellite signals to be available and operating for features to function properly. OnStar acts as a link to existing emergency service providers. OnStar Vehicle Diagnostics available on most 2004 MY and newer GM vehicles. Diagnostic capability varies by model. Visit onstar.com for system limitations and details. Requires (UK3) steering-wheel mounted audio controls. Not available with a ship-to of Puerto Rico or the Virgin Islands.	A[1]	A[1]	A[1]
PDB		**OnStar Plus Package**, includes (U2K) XM Satellite Radio, (UE1) OnStar and (UK3) steering-wheel mounted audio controls 1 - Package does not include (U2K) XM Satellite Radio when ordered outside the 48 contiguous United States. Not available with a ship-to of Puerto Rico or the Virgin Islands.	A[1]	A[1]	A[1]
R6Q		**OnStar Plus Package discount not desired** 1 - Required when content within option package is ordered and entire package is not desired.	A[1]	A[1]	A[1]
		Power outlets, 2 auxiliary instrument panel-mounted with covers, 12-volt	S	S	S
	AU0	**Remote Keyless Entry**, with 2 transmitters, panic button and content theft alarm	S	S	S
	**D	**Seat trim**, Custom Cloth	S	S	--
	**2	**Seat trim**, leather-appointed front and rear	A	A	■
	AE7	**Seats**, front 40/20/40 split-bench, 3-passenger, driver and front passenger manual reclining, center fold-down armrest with storage, adjustable outboard head restraints and storage pockets	S	--	--

Free Flow RPO Code	Ref. Only RPO Code	Description 1 - Equipment group 1LT, 2LT and 3LT available on CC15743 and CK15743 Models.	Crew Cab LT1 1LT[1]	 LT2 2LT[1]	 LT3 3LT[1]
A95		**Seats**, front bucket, includes (AG1) 6-way power driver seat adjuster, front passenger manual recline, adjustable outboard head restraints, inboard armrests and storage pockets 1 - Requires Fleet and Government order types only. Includes (D07) floor console, (UQ7) Bose Premium speaker system and (UK6) rear audio controls.	A[1]	■	--
	AN3	**Seats**, front bucket, includes 10-way power driver and front passenger seat adjusters, 2-way power lumbar control, heated seat cushions and seatbacks, 2-position driver memory, adjustable outboard head restraints, floor console, dual inboard armrests and storage pockets	--	--	■
		Seats, rear 60/40 split-bench, 3-passenger, flat-folding (includes child seat top tether anchor)	S	S	S
AG1		**Seat adjuster**, driver 6-way power 1 - Included with (**2) Seat trim, leather appointed, front and rear. Included with (A95) front reclining bucket seats. 2 - With (AN3) front full-feature bucket seats, includes 10-way power seat adjusters.	A[1]	■	■[2]
	AG2	**Seat adjuster**, front passenger 10-way power 1 - Included and only available with (AN3) front full-feature bucket seats.	--	--	■[1]
		Steering column, Tilt-Wheel, adjustable with brake/transmission shift interlock	S	S	S
	NP5	**Steering wheel**, leather-wrapped, Black with theft-deterrent locking feature	S	S	S
UK3		**Steering wheel controls**, mounted audio and Driver Information Center controls which provides access to enhanced Driver Information Center features and information	A	■	■
CF5		**Sunroof**, power, tilt-sliding with express-open and wind deflector, includes (UG1) Universal Home Remote	--	A	A
		Theft-deterrent system, PASSlock II	S	S	S
		Tools, mechanical jack and wheel wrench located in back of cab	S	S	S
	UG1	**Universal Home Remote** 1 - Included and only available with (CF5) power sunroof.	--	A[1]	A[1]
		Visors, driver and front passenger, padded with cloth trim, extenders, pocket on driver-side and vanity mirror on passenger-side, Shale-colored	S	S	S
		Warning tones, headlamp on, key-in-ignition, driver and passenger buckle up reminder and turn signal on	S	S	S
	A31	**Windows**, power with driver and front passenger Express-Down	S	S	S
A28		**Window**, manual rear-sliding, deep-tinted 1 - Deletes (C49) rear-window defogger when ordered.	A[1]	A[1]	A[1]

2007 Chevrolet Truck Silverado 1500HD Classic — INTERIOR

Free Flow RPO Code	Ref. Only RPO Code	Description 1 - Equipment group 1LT, 2LT and 3LT available on CC15743 and CK15743 Models.	Crew Cab LT1 1LT[1]	 LT2 2LT[1]	 LT3 3LT[1]
U2K		**XM Satellite Radio.** With a wide variety of programming, XM has something to excite any driver. Whether you want to be entertained or informed, to laugh, think, or sing, XM has the perfect channel for you - coast-to-coast, and in digital-quality sound. 3 trial months - no obligation **1 - Available in the 48 contiguous United States. Required $12.95 monthly subscription sold separately. All fees and programming subject to change. Subscription subject to customer agreement. For more information, visit gm.xmradio.com.**	A[1]	A[1]	A[1]

2007 Chevrolet Truck Silverado 1500HD Classic — EXTERIOR

S = Standard Equipment A = Available -- (dashes) = Not Available D = ADI Available
■ = Included in Equipment Group □ = Included in Equipment Group but upgradeable

*Indicates availability of feature on multiple models. For example, it indicates feature availability on 2WD and 4WD Models or Rear wheel drive and All-wheel drive Models.

Codes listed in the shaded column titled Ref. Only RPO Code are for internal use only and should not be ordered.

Free Flow RPO Code	Ref. Only RPO Code	Description 1 - Equipment group 1LT, 2LT and 3LT available on CC15743 and CK15743 Models.	Crew Cab LT1 1LT[1]	 LT2 2LT[1]	 LT3 3LT[1]
		Air dam, Gray	S	S	S
	VG3	**Bumper**, front chrome with Gray lower	S	S	S
	VB3	**Bumper**, rear chrome, step-style with pad	S	S	S
		Daytime Running Lamps, with automatic exterior lamp control	S	S	S
T96		**Fog lamps**, front, halogen **1 - With 2WD models requires (V76) front frame-mounted recovery hooks.**	A[1]	■	■
	AJ1	**Glass**, Solar-Ray deep-tinted (all windows except light-tinted glass on windshield, driver- and front passenger-side glass) (includes light-tinted rear window)	S	S	S
	TR3	**Grille**, chrome surround with chrome accent bar	S	S	S
		Headlamps, dual halogen composite with automatic exterior lamp control and flash-to-pass feature	S	S	S
U01		**Lamps**, Amber roof marker **1 - Not available with (YF5) California state emissions requirements.**	A[1]	A[1]	A[1]
		Lamps, dual cargo area lamps	S	S	S
	DL8	**Mirrors**, outside heated power-adjustable, Black, manual-folding	S	S	--
DL3		**Mirrors**, outside heated power-adjustable, power-folding and driver-side auto-dimming, Black with integrated turn signal indicators **1 - Curb-tilt feature requires (UK3) steering-wheel mounted audio and Driver Information Center (DIC) controls.** **2 - Upgradeable to (DPN) outside vertical camper mirrors. Includes curb-tilt when (UK3) steering-wheel mounted audio controls is ordered.**	A[1]	A[1]	□[2]
DPN		**Mirrors**, outside heated power-adjustable vertical camper manual-folding and extension, integrated turn signal indicators and lower convex spotter glass (convex glass is not heated)	A	A	A
	B85	**Moldings**, color-keyed bodyside with bright inserts **1 - Refer to Color and Trim Chart for compatibility.**	■[1]	■[1]	■[1]
	ZY1	**Paint**, solid	S	S	S
	E63	**Pickup box**, Fleetside	S	S	S
	V76	**Recovery hooks**, front, frame-mounted	S	S	S
BVE		**Regular production accessory**, Assist steps, chrome plated tubular, stainless steel **1 - For additional GM Accessory Offerings and Installation, please contact your local GM Accessory Distributor Installer (ADI).**	A/D[1]	A/D[1]	A/D[1]

2007 Chevrolet Truck Silverado 1500HD Classic — EXTERIOR

Free Flow RPO Code	Ref. Only RPO Code	Description 1 - Equipment group 1LT, 2LT and 3LT available on CC15743 and CK15743 Models.	Crew Cab LT1 1LT[1]	 LT2 2LT[1]	 LT3 3LT[1]
BVS		**Regular production accessory**, Assist steps, Black coated tubular, stainless steel **1 - For additional GM Accessory Offerings and Installation, please contact your local GM Accessory Distributor Installer (ADI).**	A/D[1]	A/D[1]	A/D[1]
PPB		**Regular production accessory**, Pickup bed extender, brushed aluminum **1 - For additional GM Accessory Offerings and Installation, please contact your local GM Accessory Distributor Installer (ADI).**	A/D[1]	A/D[1]	A/D[1]
PUB		**Regular production accessory**, Pickup bed protectors, Top side rails, Black molded **1 - Not available with (E95) Regular production accessory, soft, Black tonneau cover or (EN6) Regular production accessory, hard, Black tonneau cover. For additional GM Accessory Offerings and Installation, please contact your local GM Accessory Distributor Installer (ADI).**	A/D[1]	A/D[1]	A/D[1]
E95		**Regular production accessory**, Tonneau cover, Black, soft **1 - Not available with (PUB) Regular production accessory, top side rail, Black-molded, pickup bed protectors. For additional GM Accessory Offerings and Installation, please contact your local GM Accessory Distributor Installer (ADI).**	A/D[1]	A/D[1]	A/D[1]
EN6		**Regular production accessory**, Tonneau cover, Black, hard, folding, lockable **1 - Not available with (PUB) Regular production accessory, top side rail, Black-molded, pickup bed protectors. For additional GM Accessory Offerings and Installation, please contact your local GM Accessory Distributor Installer (ADI).**	A/D[1]	A/D[1]	A/D[1]
		Tire carrier, lockable outside spare, winch-type mounted under frame at rear	S	S	S
SAF		**Spare tire lock**, keyed cylinder lock that utilizes same key as ignition and door	A	A	A
	QIZ	**Tires**, LT245/75R16E all-season, blackwall	S	S	S
QIW		**Tires**, LT245/75R16E on-/off-road, blackwall **1 - Includes (ZHH) LT245/75R16E all-season blackwall spare tire.**	A[1]	A[1]	A[1]
	PY2	**Wheels**, 4 - 16" x 6.5" (40.6 cm x 16.5 cm) 8-lug chrome-styled steel, includes chrome center caps and steel spare	S	S	--
PY0		**Wheels**, 4 - 16" x 6.5" (40.6 cm x 16.5 cm) 8-lug polished forged aluminum, includes chrome center caps and steel spare	A	A	■
	B71	**Wheel flares**, front and rear	S	S	S
		Wipers, front intermittent wet-arm with pulse washers	S	S	S

2007 Chevrolet Truck Silverado 1500HD Classic — MECHANICAL

S = Standard Equipment A = Available – (dashes) = Not Available D = ADI Available
■ = Included in Equipment Group □ = Included in Equipment Group but upgradeable

*Indicates availability of feature on multiple models. For example, it indicates feature availability on 2WD and 4WD Models or Rear wheel drive and All-wheel drive Models.

Codes listed in the shaded column titled Ref. Only RPO Code are for internal use only and should not be ordered.

Free Flow RPO Code	Ref. Only RPO Code	Description 1 - Equipment group 1LT, 2LT and 3LT available on CC15743 and CK15743 Models.	Crew Cab LT1 1LT[1]	 LT2 2LT[1]	 LT3 3LT[1]
K47		**Air cleaner**, high-capacity **1 - Included with (Z82) heavy-duty trailering equipment.**	A[1]	A[1]	A[1]
KL5		**Alternative fuel conversions**, conversion-ready engine, includes internal modifications for operation with natural or propane gas	A	A	A
	K68	**Alternator**, 105 amps	S	S	S
		Battery, heavy-duty 600 cold-cranking amps, maintenance-free with rundown protection and retained accessory power	S	S	S
TP2		**Battery**, auxiliary heavy-duty 600 cold-cranking amps, maintenance-free	A	A	A
		Brakes, 4-wheel antilock, 4-wheel disc	S	S	S
	KC4	**Cooling**, external engine oil cooler, heavy-duty air-to-oil, integral to driver-side of radiator tank	S	S	S
	KNP	**Cooling**, auxiliary transmission oil cooler, heavy-duty air-to-oil	S	S	S
		Cooling, internal transmission oil cooler, water-to-oil, integral to driver-side of radiator tank	S	S	S
G80		**Differential**, heavy-duty automatic locking rear	A	A	A
YF5		**Emissions**, California state requirements	A	A	A
FE9		**Emissions**, Federal requirements	A	A	A
NE1		**Emissions**, Maine, Massachusetts, New York or Vermont state requirements	A	A	A
NB8		**Emissions override**, California, Massachusetts or New York (for vehicles ordered by dealers in states of California, Massachusetts or New York with Federal emissions) **1 - Requires (FE9) Federal emissions requirements.**	A[1]	A[1]	A[1]
NC7		**Emissions override**, Federal (for vehicles ordered by dealers in Federal emission states with California, New York, Vermont, Massachusetts or Maine emissions; may also be used by dealers in states of California, New York, Vermont, Massachusetts or Maine to order different state-specific emissions) **1 - Requires (YF5) California state emissions requirements or (NE1) New York, Vermont, Massachusetts or Maine state emissions requirements.**	A[1]	A[1]	A[1]
K05		**Engine block heater**	A	A	A
	LQ4	**Engine**, Vortec 6.0L V8 SFI (300 hp [223.8 kW] @ 4400 rpm, 360 lb-ft of torque [486.6 N-m] @ 4000 rpm)	S	S	S
		Exhaust, aluminized stainless-steel muffler and tailpipe	S	S	S
		Frame, hydroformed ladder-type	S	S	S

2007 Chevrolet Truck Silverado 1500HD Classic MECHANICAL

Free Flow RPO Code	Ref. Only RPO Code	Description 1 - Equipment group 1LT, 2LT and 3LT available on CC15743 and CK15743 Models.	Crew Cab LT1 1LT[1]	 LT2 2LT[1]	 LT3 3LT[1]
	C6P	GVWR, 8600 lbs. (3901 kg) (must specify)	S	S	S
	GT4	Rear axle, 3.73 ratio	S	S	S
GT5		Rear axle, 4.10 ratio	A	A	A
NZZ		**Skid Plate Package**, includes aluminum front underbody shield starting behind front bumper and running to first cross-member, protecting front underbody, oil pan, differential case and transfer case, frame-mounted shields 1 - Requires 4x4 models.	A[1]	A[1]	A[1]
		Steering, power	S	S	S
		Suspension, front independent with torsion bar and stabilizer bar	S	S	S
		Suspension, rear 2-stage multi-leaf springs, semi-elliptic	S	S	S
	Z85	**Suspension Package**, Handling/Trailering, heavy-duty, includes 36 mm piston monotube shocks	S	S	S
Z82		**Trailering equipment**, heavy-duty, includes trailering hitch platform, 7-wire harness (harness includes wires for: park lamps, backup lamps, right turn, left turn, electric brake lead, battery and ground) with independent fused trailering circuits mated to a 7-way sealed connector, instrument panel jumper wiring harness for electric trailer brake controller and 1-way sealed connector for center high-mounted stop/brake lamp and (K47) high-capacity air cleaner	A	A	A
UY2		**Trailering wiring provisions**, for camper, fifth wheel and gooseneck trailer, includes additional 8-way wiring harness routed to front of pickup box and added 7-way sealed connector for the trailer harness 1 - Requires (Z82) heavy-duty trailering equipment.	A[1]	A[1]	A[1]
	NP8	**Transfer case**, electronic Autotrac with push-button controls 1 - Standard with 4x4 models only.	S[1]	S[1]	S[1]
	MT1	**Transmission**, 4-speed automatic, heavy-duty, electronically controlled with overdrive and tow/haul mode 1 - When (Z82) heavy-duty trailering equipment is ordered, transmission temperature gauge is included.	S[1]	S[1]	S[1]

2007 Chevrolet Truck Silverado 1500HD Classic ENGINE/AXLE

S = Standard Equipment A = Available -- (dashes) = Not Available
■ = Included in Equipment Group □ = Included in Equipment Group but upgradeable

*Indicates availability of feature on multiple models. For example, it indicates feature availability on 2WD and 4WD Models or Rear wheel drive and All-wheel drive Models.

		Transmissions	Axles		GVWR lbs. (kg)
Model	Engine	MT1 4-Speed Automatic with OD	GT4 3.73	GT5 4.10	C6P 8600 (3901)
CC15743	LQ4 Vortec 6.0L V8 SFI	S	S	A	S
CK15743	LQ4 Vortec 6.0L V8 SFI	S	S	A	S

2007 Chevrolet Truck Silverado 1500HD COLOR AND TRIM - SOLID PAINT ZY1
Classic

S = Standard Equipment A = Available -- (dashes) = Not Available
■ = Included in Equipment Group □ = Included in Equipment Group but upgradeable

*Indicates availability of feature on multiple models. For example, it indicates feature availability on 2WD and 4WD Models or Rear wheel drive and All-wheel drive Models.

Decor Level	Seat Type	Seat Code	Seat Trim	Interior		
				Tan	Dark Charcoal	Medium Gray
LT1	Front 40/20/40 reclining split-bench with fold down armrest	AE7	Custom Cloth	52D	69D	--
LT1	Front 40/20/40 reclining split-bench with armrest	AE7	Custom Leather-appointed, front and rear	522	692	922
LT1/ LT2	Front power buckets	A95[1]	Custom Cloth	52D	69D	--
LT1/ LT2	Front power buckets	A95[1]	Custom Leather-appointed, front and rear	522	692	922
LT3	Front power reclining full-feature buckets	AN3	Custom Leather-appointed, front and rear	522	692	922

Exterior Solid Paint	Color Code	Touch Up Paint Number	Interior			Wheel Flare and/or Bodyside Molding Color LS and LT
			Tan	Dark Charcoal	Medium Gray	
Graystone Metallic	16U	WA-213M	A	A	A	Graystone Metallic
Dark Blue Metallic	25U	WA-722J	A	A	A	Black
Black	41U	WA-8555	A	A	A	Black
Blue Granite Metallic	46U	WA-928L	A	A	A	Black
Summit White	50U	WA-8624	A	A	A	Summit White
Silver Birch Metallic	59U	WA-926L	--	A	A	Silver Birch Metallic
Sport Red Metallic	63U	WA-817K	A	A	A	Black
Victory Red	74U	WA-9260	A	A	A	Black

Above interior trim combinations are the only combinations allowed.

1 - LT1 requires Fleet or Government order types.

2007 Chevrolet Truck Silverado 1500HD COLOR AND TRIM - SEO SOLID PAINT
Classic

S = Standard Equipment A = Available -- (dashes) = Not Available
■ = Included in Equipment Group □ = Included in Equipment Group but upgradeable

*Indicates availability of feature on multiple models. For example, it indicates feature availability on 2WD and 4WD Models or Rear wheel drive and All-wheel drive Models.

Decor Level	Seat Type	Seat Code	Seat Trim	Interior		
				Tan	Dark Charcoal	Medium Gray
LT1	Front 40/20/40 reclining split-bench with fold down armrest	AE7	Custom Cloth	52D	69D	--
LT1	Front 40/20/40 reclining split-bench with armrest	AE7	Custom Leather-appointed, front and rear	522	692	922
LT1/ LT2	Front power buckets	A95[1]	Custom Cloth	52D	69D	--
LT1/ LT2	Front power buckets	A95[1]	Custom Leather-appointed, front and rear	522	692	922
LT3	Front power reclining full-feature buckets	AN3	Custom Leather-appointed, front and rear	522	692	922

Exterior Solid Paint	Color Code	Touch Up Paint Number	Interior		
			Tan	Dark Charcoal	Medium Gray
Yellow	none	WA-5248	A	A	A
Blue Metallic	none	WA-5405	A	A	A
Yellow	none	WA-5445	A	A	A
Yellow	none	WA-5456	A	A	A
Blue	none	WA-5663	A	A	A
Green - Low Gloss	none	WA-6237	A	A	A
Tan - Low Gloss	none	WA-6238	A	A	A
Blue	none	WA-7154	A	A	A
Blue Metallic	none	WA-7159	A	A	A
Gray Metallic	none	WA-7840	A	A	A
Green	none	WA-7941	A	A	A
Green, Woodland	9V5	WA-9015	A	A	A
Doeskin Tan	9V9	WA-9403	A	A	A
Orange	none	WA-9408	A	A	A
Yellow	none	WA-9414	A	A	A
Tangier Orange	9W4	WA-9417	A	A	A
Orange	none	WA-9419	A	A	A
Indigo Blue	none	WA-9792	A	A	A
NEW! Brown	none	WA-195E	A	A	A

Light Autumnwood Metallic	none	WA-228A	A	A	A
Wheatland Yellow	9W3	WA-253A	A	A	A
Dark Toreador Red	none	WA-334D	A	A	A
Pewter	none	WA-382E	A	A	A
Blue	none	WA-769H	A	A	A
Orange	none	WA-770H	A	A	A
Green	none	WA-5758	A	A	A
NEW! Arrival Blue	none	WA-815K	A	A	A
NEW! Blue	none	WA-454N	A	A	A
All wheel flares, mirrors, body side moldings, door handles, bumpers and fascia will be Black.					
1 - LT1 requires Fleet or Government order types.					

S = Standard Equipment A = Available – (dashes) = Not Available D = ADI Available
■ = Included in Equipment Group □ = Included in Equipment Group but upgradeable

*Indicates availability of feature on multiple models. For example, it indicates feature availability on 2WD and 4WD Models or Rear wheel drive and All-wheel drive Models.

Codes listed in the shaded column titled Ref. Only RPO Code are for internal use only and should not be ordered.

Free Flow RPO Code	Ref. Only RPO Code	Description 1 - Equipment group 1LT, 2LT and 3LT available on CC15743 and CK15743 Models.	Crew Cab LT1 1LT[1]	 LT2 2LT[1]	 LT3 3LT[1]
		Interior			
9R0		**Sound system, ETR AM/FM stereo with cassette (MSRP = No Charge)** AM/FM stereo with cassette and digital clock, no CD player. Replaces the base radio. **1 - Requires a Fleet or Government sales order and RPO (AE7) front 40/20/40 split-bench seat. Not available with RPO (UK3) steering-wheel mounted audio controls, (UE1) OnStar or (PDB) OnStar Plus Package.**	A[1]	--	--
		Exterior			
8X1		**Label, fasten safety belts (MSRP = $2.00)** "Fasten Safety Belts" reminder label on side door window glass.	A	A	A
9V9		**Paints, solid (MSRP = No Charge),** Doeskin Tan **1 - Requires SEO (TGK) solid paint.**	A[1]	A[1]	A[1]
9W4		**Paints, solid (MSRP = No Charge),** Tangier Orange **1 - Requires SEO (TGK) solid paint.**	A[1]	A[1]	A[1]
9W3		**Paints, solid (MSRP = No Charge),** Wheatland Yellow **1 - Requires SEO (TGK) solid paint.**	A[1]	A[1]	A[1]
9V5		**Paints, solid (MSRP = No Charge),** Woodland Green **1 - Requires SEO (TGK) solid paint.**	A[1]	A[1]	A[1]
TGK		**Solid Paint** SEO solid paint, one color **1 - Required with any SEO paint selection. May require an extended lead time.**	A[1]	A[1]	A[1]
9L3		**Spare tire delete (MSRP = -$45.00 Credit)** Deletes the spare tire only. Spare wheel and carrier remain.	A	A	A
5Z4		**Spare wheel and tire delete (MSRP = -$110.00 Credit)** Deletes the spare tire, wheel and carrier that are base equipment. **1 - Not available with RPO (SAF) spare tire lock.**	A[1]	A[1]	A[1]
4GK		**Tire, spare LT245/75R16 (E) Blackwall 10 Ply on-off road (MSRP = $11.00)** This spare replaces standard highway tread spare. **1 - Requires RPO (QIW) LT245/75R16E, on-/off-road, blackwall tires. Not available with SEO (5Z4) spare wheel and tire delete.**	A[1]	A[1]	A[1]
		Mechanical			

2007 Chevrolet Truck Silverado 1500HD Classic — SEO OPTIONS/SHIP THRU CODES

Free Flow RPO Code	Ref. Only RPO Code	Description 1 - Equipment group 1LT, 2LT and 3LT available on CC15743 and CK15743 Models.	Crew Cab LT1 1LT[1]	 LT2 2LT[1]	 LT3 3LT[1]
8C6		**Alternator, 145 amp (MSRP = $140.00)** 145 amp alternator in place of the standard 105 amp alternator.	A	A	A
7Y9		**Battery, Single 770 CCA (MSRP = $56.00)** 1 - Not available with RPO (TP2) auxiliary heavy-duty, 600 cold-cranking-amp battery.	A[1]	A[1]	A[1]
		Ship Thru Codes			
VCB		**Ship Thru for Models C*15743 (MSRP = $120.00)** Produced in Flint Assembly and shipped to Monroe Truck Equipment (in Flint) and back to Flint Assembly.	A	A	A
VEW		**Ship Thru for Models C*15743 (MSRP = $260.00)** Produced in Flint Assembly and shipped to Canfield Truck Equipment.	A	A	A
VFW		**Ship Thru for Models C*15743 (MSRP = $255.00)** Produced in Flint Assembly and shipped to NBC Truck Equipment	A	A	A
VSQ		**Ship Thru for Models C*15743 (MSRP = $270.00)** Produced in Flint Assembly and shipped to Monroe Truck Equipment (in Janesville, WI) and onto Janesville Assembly.	A	A	A
VUD		**Ship Thru for Models C*15743 (MSRP = $120.00)** Produced in Flint Assembly and shipped to Knapheide Truck Equipment	A	A	A
VUI		**Ship Thru for Models C*15743 (MSRP = $295.00)** Produced in Flint Assembly and shipped to Ft. Wayne Fleet Equipment	A	A	A
VUM		**Ship Thru for Models C*15743 (MSRP = $375.00)** Produced in Flint Assembly and shipped to Buckeye Truck Equipment	A	A	A

2007 Chevrolet Truck Silverado 1500HD Classic — ONSTAR FLEET CODES

S = Standard Equipment A = Available -- (dashes) = Not Available D = ADI Available
■ = Included in Equipment Group □ = Included in Equipment Group but upgradeable

*Indicates availability of feature on multiple models. For example, it indicates feature availability on 2WD and 4WD Models or Rear wheel drive and All-wheel drive Models.

Codes listed in the shaded column titled Ref. Only RPO Code are for internal use only and should not be ordered.

Free Flow RPO Code	Ref. Only RPO Code	Description 1 - Equipment group 1LT, 2LT and 3LT available on CC15743 and CK15743 Models.	Crew Cab LT1 1LT[1]	 LT2 2LT[1]	 LT3 3LT[1]
R8G		**OnStar 1 Additional Year of Safe and Sound Service (MSRP= $199).** Provides 1 year of Safe and Sound service following the first year of OnStar service included in the price of the vehicle. Fleet may also order (RFB) 2-Years OnStar Business Vehicle Manager Service 1 - Requires one of the following Fleet or Government order types: FLS, FNR, FRC, FBC, FGO or FEF. Not available with R8P, R8U, R8V, R8W, R8Y or R8Z. Requires (UE1) 1-Year OnStar service.	A[1]	A[1]	A[1]
R8P		**OnStar 2 Additional Years of Safe and Sound Service (MSRP=$379)** Provides 2 additional years of Safe and Sound service following the first year of OnStar service included in the price of the vehicle. Fleet may also order (RFC) 3-Years OnStar Business Vehicle Manager Service 1 - Requires one of the following Fleet or Government order types: FLS, FNR, FRC, FBC, FGO or FEF. Not available with R8G, R8U, R8V, R8W, R8Y or R8Z. Requires (UE1) 1-Year OnStar service.	A[1]	A[1]	A[1]
R8U		**OnStar 3-Years Safe and Sound Service (MSRP=$679)** Provides 3 Years of Safe and Sound service. Includes cost of hardware. Fleet may also order (RFC) 3-Years OnStar Business Vehicle Manager Service 1 - Requires one of the following Fleet or Government order types: FLS, FNR, FRC, FBC, FGO or FEF. Requires (UE1) 1-Year OnStar service. Not available with R8G, R8P, R8V, R8W, R8Y or R8Z.	A[1]	A[1]	A[1]
R8V		**OnStar 3-Years Directions and Connections Service (MSRP=$979)** Provides 3 years of Directions and Connections service. Includes cost of hardware. Fleet may also order (RFC) 3-Years OnStar Business Vehicle Manager Service 1 - Requires one of the following Fleet or Government order types: FLS, FNR, FRC, FBC, FGO or FEF. Requires (UE1) 1-Year OnStar service. Not available with R8G, R8P, R8U, R8W, R8Y or R8Z.	A[1]	A[1]	A[1]
R8W		**OnStar 1-Year Directions and Connections Service (MSRP=$100)** Provides an upgrade from Safe and Sound service included in the price of the vehicle in the first year. Fleet may also order (RFA) 1-Year OnStar Business Vehicle Manager Service 1 - Requires one of the following Fleet or Government order types: FLS, FNR, FRC, FBC, FGO or FEF. Not available with R8G, R8P, R8U, R8V, R8Y or R8Z. Requires (UE1) 1-Year OnStar service.	A[1]	A[1]	A[1]
R8Y		**OnStar 2-Years Directions and Connections Service (MSRP=$399)** Provides cumulative 2 Years of Directions and Connections service. In the first year, this is an upgrade from Safe and Sound service included in the price of the vehicle. Fleet may also order (RFB) 2-Years OnStar Business Vehicle Manager Service 1 - Requires one of the following Fleet or Government order types: FLS, FNR, FRC, FBC, FGO or FEF. Not available with R8G, R8P, R8U, R8V, R8W or R8Z. Requires (UE1) 1-Year OnStar service.	A[1]	A[1]	A[1]

2007 Chevrolet Truck Silverado 1500HD Classic — ONSTAR FLEET CODES

Free Flow RPO Code	Ref. Only RPO Code	Description 1 - Equipment group 1LT, 2LT and 3LT available on CC15743 and CK15743 Models.	Crew Cab LT1 1LT[1]	 LT2 2LT[1]	 LT3 3LT[1]
R8Z		**OnStar 3-Years Directions and Connections Service (MSRP=$679)** Provides cumulative 3 Years of Directions and Connections service. In the first year, this is an upgrade from Safe and Sound service included in the price of the vehicle. Fleet may also order (RFC) 3-Year OnStar Business Vehicle Manager Service **1 - Requires one of the following Fleet or Government order types: FLS, FNR, FRC, FBC, FGO or FEF. Not available with R8G, R8P, R8U, R8V, R8W or R8Y. Requires (UE1) 1-Year OnStar service.**	A[1]	A[1]	A[1]
RFA		**OnStar 1-Year Business Vehicle Manager Service (MSRP=$25)** Provides one year of OnStar Business Vehicle Manager Service **1 - Requires one of the following Fleet or Government order types: FLS, FNR, FRC, FBC, FGO or FEF. Not available with RFB or RFC. Requires (UE1) 1-Year OnStar service or (R8W) 1-Year Directions and Connections Service.**	A[1]	A[1]	A[1]
RFB		**OnStar 2-Years Business Vehicle Manager Service (No charge)** Provides two years of OnStar Business Vehicle Manager Service **1 - Requires one of the following Fleet or Government order types: FLS, FNR, FRC, FBC, FGO or FEF. Not available with RFA or RFC. Requires (UE1) 1-Year OnStar service and either (R8G) or (R8Y) which provide for a total of two years of OnStar service.**	A[1]	A[1]	A[1]
RFC		**OnStar 3-Years Business Vehicle Manager Service (No Charge)** Provides three years of OnStar Business Vehicle Manager Service **1 - Requires one of the following Fleet or Government order types: FLS, FNR, FRC, FBC, FGO or FEF. Not available with RFA or RFB. Requires (UE1) 1-Year OnStar service and either (R8P), (R8U), (R8V), or (R8Z) which provide for a total of three years of OnStar service.**	A[1]	A[1]	A[1]

2007 Chevrolet Truck Silverado 1500HD Classic — ADI - ACCESSORIES

There is no data available for Silverado 1500HD Classic.

2007 Chevrolet Truck Silverado 1500HD DIMENSIONS
Classic

All dimensions in inches (mm) unless otherwise stated.

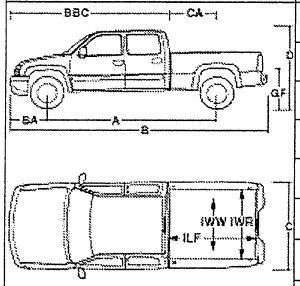

	Specifications	CC15743 2WD Crew Cab Standard Box	CK15743 4x4 Crew Cab Standard Box
A	Wheelbase	153.00 (3886)	153.00 (3886)
B	Overall length	239.70 (6088)	239.70 (6088)
C	Body width	79.70 (2024)	79.70 (2024)
D	Overall height	77.00 (1956)	77.00 (1956)
	Head room, front	41.10 (1044)	41.10 (1044)
	Head room, rear	39.90 (1013)	39.90 (1013)
	Shoulder room, front	65.20 (1656)	65.20 (1656)
	Shoulder room, rear	65.10 (1654)	65.10 (1654)
	Hip room, front	61.40 (1560)	61.40 (1560)
	Hip room, rear	62.90 (1598)	62.90 (1598)
	Leg room, front	41.30 (1049)	41.30 (1049)
	Leg room, rear	38.80 (986)	38.80 (986)
CA	Cab to axle	41.90 (1064)	41.90 (1064)
BA	Front bumper to axle	37.00 (940)	37.00 (940)
	Rear bumper to axle	52.20 (1326)	52.20 (1326)
	Inside height	19.50 (495)	19.50 (495)
IWR	Tailgate width, top	61.90 (1572)	61.90 (1572)
BBC	Front bumper to back of cab	148.10 (3762)	148.10 (3762)
GF	Ground to top of rear load floor	TBD	TBD
ILF	Inside length, at floor, Fleetside	78.70 (1999)	78.70 (1999)
IWW	Inside width, between wheelhousing	50.00 (1270)	50.00 (1270)

2007 Chevrolet Truck Silverado 1500HD DIMENSIONS
Classic

All dimensions in inches (mm) unless otherwise stated.

	Specifications	CC15743 2WD Crew Cab Standard Box	CK15743 4x4 Crew Cab Standard Box
	Inside width, at floor, Fleetside	64.80 (1646)	64.80 (1646)
	Ground clearance, front	7.90 (201)	8.90 (226)
	Ground clearance, rear	7.40 (188)	8.30 (211)

Published dimensions indicated are without optional equipment or accessories. Additional accessories or equipment ordered at the customer's request can result in a minor change in these dimensions.

2007 Chevrolet Truck Silverado 1500HD SPECS
Classic

	CC15743 2WD Crew Cab Standard Box	CK15743 4x4 Crew Cab Standard Box
Specifications		
Front shock absorber diameter, in. (mm)	1.38 (35)	1.38 (35)
Front stabilizer bar diameter, in. (mm)	1.25 (32)	1.25 (32)
Rear shock absorber diameter, in. (mm)	1.38 (35)	1.38 (35)
Turning diameter, curb-to-curb, ft. (m)	49.6 (15.1)	49.6 (15.1)
Capacities		
Front axle, lbs. (kg)	4500 (2041)	4500 (2041)
Front spring capacity, lbs. (kg)	4500 (2041)	4500 (2041)
Rear axle, lbs. (kg)	6000 (2722)	6000 (2722)
Rear spring capacity, lbs. (kg)	6000 (2722)	6000 (2722)
Curb weight, lbs. (kg)	5471 (2482)	5762 (2614)
Cargo volume, cargo box, cu. ft. (liters)	56.9 (1611.4)	56.9 (1611.4)
Payload[1], lbs. (kg)	3129 (1419)	2838 (1287)
Gross Vehicle Weight Rating (GVWR), lbs. (kg)	8600 (3901)	8600 (3901)
Front Gross Axle Weight Rating (GAWR), lbs. (kg)	4410 (2000)	4410 (2000)
Rear Gross Axle Weight Rating (GAWR), lbs. (kg)	6000 (2722)	6000 (2722)
Fuel capacity, approximate, gallon (liters)	26 (98)	26 (98)
Seating capacity (front/rear)	**3/3**	**3/3**

1. Maximum payload capacity includes weight of driver, passengers, optional equipment and cargo.

2007 Chevrolet Truck Silverado 1500HD WHEELS
Classic

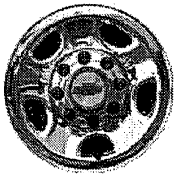	PY2 **Wheels**, 4 - 16" x 6.5" (40.6 cm x 16.5 cm) 8-lug chrome-styled steel, includes chrome center caps and steel spare
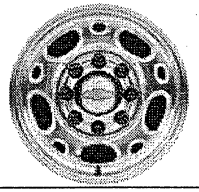	PY0 **Wheels**, 4 - 16" x 6.5" (40.6 cm x 16.5 cm) 8-lug polished forged aluminum, includes chrome center caps and steel spare

2007 Chevrolet Truck Silverado 1500HD RADIOS
Classic

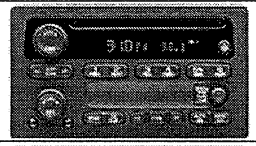	UB0 **Audio system**, AM/FM stereo with CD player, seek-and-scan, digital clock, auto-tone control, Radio Data System (RDS), speed-compensated volume and 6 speakers
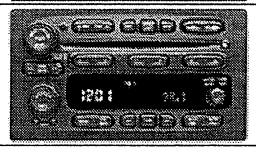	UC6 **Audio system**, AM/FM stereo with 6-disc CD changer, seek-and-scan, digital clock, auto-tone control, Radio Data System (RDS), speed-compensated volume and TheftLock

2007 Chevrolet Truck Silverado 1500HD TRAILERING SPECS - Automatic Transmission
Classic Ratings with Ball Hitch

Maximum trailer ratings are calculated assuming standard equipped vehicle, driver and required trailering equipment. The weight of optional equipment, passengers and cargo will reduce the maximum trailer weight your vehicle can tow. 10 to 15% of the trailer weight is the recommended trailer tongue load.

Automatic Transmission Ratings with Ball Hitch		
Model	(LQ4) Vortec 6.0L V8 SFI	
	Axle Ratio	Maximum Trailer Weight lbs. (kg)
CC15743	3.73	8300 (3765)
	4.10	10300 (4672)
CK15743	3.73	7900 (3583)
	4.10	9900 (4491)

GCWR For Engine/Rear Axle Ratio Combination with Automatic Transmission		
Engine	(GCWR) Gross Combination Weight Ratings lbs. (kg)	
	14000 (6350)	16000 (7258)
(LQ4) Vortec 6.0L V8 SFI	3.73	4.10

2007 Chevrolet Truck Silverado 1500HD Classic — TRAILERING SPECS - Automatic Transmission with 5th Wheel or Gooseneck Hitch

Maximum trailer ratings are calculated assuming standard equipped vehicle, driver and required trailering equipment. The weight of optional equipment, passengers and cargo will reduce the maximum trailer weight your vehicle can tow. 15 to 25% of the trailer weight is the recommended 5th Wheel or Gooseneck kingpin load.

Automatic Transmission with 5th Wheel or Gooseneck Hitch		
Model	(LQ4) Vortec 6.0L V8 SFI	
	Axle Ratio	Maximum Trailer Weight lbs. (kg)
CC15743	3.73	8300 (3765)
	4.10	10300 (4672)
CK15743	3.73	7900 (3583)
	4.10	9900 (4491)

GCWR For Engine/Rear Axle Ratio Combination with Automatic Transmission		
Engine	(GCWR) Gross Combination Weight Ratings lbs. (kg)	
	14000 (6350)	16000 (7258)
(LQ4) Vortec 6.0L V8 SFI	3.73	4.10

2007 Chevrolet Truck Silverado 1500HD Classic — RPO CODES

Option Code	Description
**2	Seat trim, leather-appointed front and rear
**D	Seat trim, Custom Cloth
4GK	Tire, spare LT245/75R16 (E) Blackwall 10 Ply on-off road (MSRP = $11.00)This spare replaces standard highway tread spare.
5Z4	Spare wheel and tire delete (MSRP = -$110.00 Credit)
7Y9	Battery, Single 770 CCA (MSRP = $56.00)
8C6	Alternator, 145 amp (MSRP = $140.00)
8X1	Label, fasten safety belts (MSRP = $2.00)
9L3	Spare tire delete (MSRP = -$45.00 Credit)
9R0	Sound system, ETR AM/FM stereo with cassette (MSRP = No Charge)
9V5	Paints, solid (MSRP = No Charge), Woodland Green
9V9	Paints, solid (MSRP = No Charge), Doeskin Tan
9W3	Paints, solid (MSRP = No Charge), Wheatland Yellow
9W4	Paints, solid (MSRP = No Charge), Tangier Orange
A28	Window, manual rear-sliding, deep-tinted
A31	Windows, power
A95	Seats, front bucket
AE7	Seats, front 40/20/40 split-bench
AG1	Seat adjuster, driver 6-way power
AG2	Seat adjuster, front passenger 10-way power
AJ1	Glass, Solar-Ray deep-tinted
AN3	Seats, front bucket
AU0	Remote Keyless Entry
AU3	Door locks, power
B30	Floor covering, color-keyed carpeting
B71	Wheel flares, front and rear
B85	Moldings, color-keyed bodyside with bright inserts
BG9	Floor covering, Black rubberized-vinyl
BVE	Regular production accessory, Assist steps, chrome plated tubular, stainless steel
BVS	Regular production accessory, Assist steps, Black coated tubular, stainless steel
C49	Defogger, rear-window
C6P	GVWR, 8600 lbs. (3901 kg)
CF5	Sunroof, power
CJ2	Air conditioning, dual-zone automatic climate control
CJ3	Air conditioning, dual-zone manual climate control
D07	Console, floor
DF5	Mirror, inside rearview auto-dimming
DK7	Console, overhead mini
DK8	Console, overhead deluxe
DL3	Mirrors, outside heated power-adjustable, power-folding and driver-side auto-dimming, Black
DL8	Mirrors, outside heated power-adjustable, Black
DPN	Mirrors, outside heated power-adjustable vertical camper
E63	Pickup box, Fleetside
E95	Regular production accessory, Tonneau cover, Black, soft
EN6	Regular production accessory, Tonneau cover, Black, hard, folding, lockable
FE9	Emissions, Federal requirements
G80	Differential, heavy-duty automatic locking rear
GT4	Rear axle, 3.73 ratio

2007 Chevrolet Truck Silverado 1500HD RPQ CODES
Classic

Option Code	Description
GT5	Rear axle, 4.10 ratio
K05	Engine block heater
K34	Cruise control
K47	Air cleaner, high-capacity
K68	Alternator, 105 amps
KC4	Cooling, external engine oil cooler
KL5	Alternative fuel conversions, conversion-ready engine
KNP	Cooling, auxiliary transmission oil cooler
LQ4	Engine, Vortec 6.0L V8 SFI
MT1	Transmission, 4-speed automatic, heavy-duty
NB8	Emissions override
NC7	Emissions override, Federal
NE1	Emissions, Maine, Massachusetts, New York or Vermont state requirements
NP5	Steering wheel, leather-wrapped, Black
NP8	Transfer case, electronic Autotrac
NZZ	Skid Plate Package
PDB	OnStar Plus Package
PPB	Regular production accessory, Pickup bed extender, brushed aluminum
PUB	Regular production accessory, Pickup bed protectors, Top side rails, Black molded
PY0	Wheels, 4 - 16" x 6.5" (40.6 cm x 16.5 cm) 8-lug polished forged aluminum
PY2	Wheels, 4 - 16" x 6.5" (40.6 cm x 16.5 cm) 8-lug chrome-styled steel
QIW	Tires, LT245/75R16E on-/off-road, blackwall
QIZ	Tires, LT245/75R16E all-season, blackwall
R6Q	OnStar Plus Package discount not desired
R8G	OnStar 1 Additional Year of Safe and Sound Service (MSRP= $199)
R8P	OnStar 2 Additional Years of Safe and Sound Service (MSRP=$379)
R8U	OnStar 3-Years Safe and Sound Service (MSRP=$679)
R8V	OnStar 3-Years Directions and Connections Service (MSRP=$979)
R8W	OnStar 1-Year Directions and Connections Service (MSRP=$100)
R8Y	OnStar 2-Years Directions and Connections Service (MSRP=$399)
R8Z	OnStar 3-Years Directions and Connections Service (MSRP=$679)
RFA	OnStar 1-Year Business Vehicle Manager Service (MSRP=$25)
RFB	OnStar 2-Years Business Vehicle Manager Service (No charge)
RFC	OnStar 3-Years Business Vehicle Manager Service (No Charge)
SAF	Spare tire lock
T96	Fog lamps, front
TGK	Solid PaintSEO solid paint, one color
TP2	Battery, auxiliary heavy-duty 600 cold-cranking amps
TR3	Grille, chrome surround with chrome accent bar
U01	Lamps, Amber roof marker
U2K	XM Satellite Radio
U42	Entertainment system, rear seat DVD player
UB0	Audio system, AM/FM stereo with CD player
UC6	Audio system, AM/FM stereo with 6-disc CD changer
UE1	OnStar, 1-year of Safe and Sound plan
UG1	Universal Home Remote
UK3	Steering wheel controls, mounted audio and Driver Information Center controls
UK6	Audio system controls, rear
UQ3	Audio system feature, 6-speaker system

2007 Chevrolet Truck Silverado 1500HD RPQ CODES
Classic

Option Code	Description
UQ7	Audio system feature, Bose premium speaker system
UY2	Trailering wiring provisions, for camper, fifth wheel and gooseneck trailer
V76	Recovery hooks, front, frame-mounted
VB3	Bumper, rear chrome
VCB	Ship Thru for Models C*15743 (MSRP = $120.00)Produced in Flint Assembly and shipped to Monroe Truck Equipment
VEW	Ship Thru for Models C*15743 (MSRP = $260.00)
VFW	Ship Thru for Models C*15743 (MSRP = $255.00)Produced in Flint Assembly and shipped to NBC Truck Equipment
VG3	Bumper, front chrome with Gray lower
VSQ	Ship Thru for Models C*15743 (MSRP = $270.00)Produced in Flint Assembly and shipped to Monroe Truck Equipment
VUD	Ship Thru for Models C*15743 (MSRP = $120.00)Produced in Flint Assembly and shipped to Knapheide Truck Equipment
VUI	Ship Thru for Models C*15743 (MSRP = $295.00)Produced in Flint Assembly and shipped to Ft. Wayne Fleet Equipment
VUM	Ship Thru for Models C*15743 (MSRP = $375.00)Produced in Flint Assembly and shipped to Buckeye Truck Equipment
YF5	Emissions, California state requirements
Z82	Trailering equipment, heavy-duty
Z85	Suspension Package, Handling/Trailering, heavy-duty
ZY1	Paint, solid

Updates for Silverado 1500HD Classic

Week of 7/17/2006

Effective 7/17/2006, the following changes will be made to the Vehicle Order Guide:

- Interior section-Air bags, frontal, changed footnote #1 to read "Always use safety belts and the correct child restraints for your child's age and size, even in vehicles equipped with air bags. Children are safer when properly secured in a rear seat. See the vehicle's Owner's Manual and child safety seat instructions for more safety information.".

Week of 6/19/2006

Effective 6/19/2006, the following changes will be made to the Vehicle Order Guide:

- All sections-Removed the word "Federal" anywhere it used to say "Requires a Fleet or Federal Government order type.
- All sections-removed the hundred designation (ex: 5300) from all engine descriptions and replaced it with liters designation (ex: 5.3L). Please review entire order guide to see where it changed.

Week of 5/22/2006

Effective 5/22/2006, the following changes will be made to the Vehicle Order Guide:

- OnStar Fleet Options section-please review entire section as many changes have been made.

Week of 5/15/2006

Effective 5/15/2006, the following changes will be made to the Vehicle Order Guide:

- SEO Ship Thru section-Added (VEW) Ship Thru for Models C*15743 (MSRP = $260.00) Produced in Flint Assembly and shipped to Canfield Truck Equipment.

Week of 5/1/2006

Effective 5/1/2006, the following changes will be made to the Vehicle Order Guide:

- Exterior section-(BVE) Regular production accessory, Assist steps, chrome plated tubular, added footnote #1 that reads "For additional GM Accessory Offerings and Installation, please contact your local GM Accessory Distributor Installer (ADI)." and applies to all packages.
- Exterior section-(BVS) Regular production accessory, Assist steps, Black coated tubular, added footnote #1 that reads "For additional GM Accessory Offerings and Installation, please contact your local GM Accessory Distributor Installer (ADI)." and applies to all packages.
- Exterior section-(PPB) Regular production accessory, Pickup bed extender, brushed aluminum, added footnote #1 that reads "For additional GM Accessory Offerings and Installation, please contact your local GM Accessory Distributor Installer (ADI)." and applies to all packages.
- Exterior section-(PUB) Regular production accessory, Pickup bed protectors, Top side rails, changed footnote to read "Not available with (E95) Regular production accessory, soft, Black tonneau cover or (EN6) Regular production accessory, hard, Black tonneau cover. For additional GM Accessory Offerings and Installation, please contact your local GM Accessory Distributor Installer (ADI).".
- Exterior section-(E95) Regular production accessory, Tonneau cover, Black, soft, changed footnote to read "Not available with (PUB) Regular production accessory, top side rail, Black-molded, pickup bed protectors. For additional GM Accessory Offerings and Installation, please contact your local GM Accessory Distributor Installer (ADI).".
- Exterior section-(EN6) Regular production accessory, Tonneau cover, Black, hard, changed footnote to read "Not available with (PUB) Regular production accessory, top side rail, Black-molded, pickup bed protectors. For additional GM Accessory Offerings and Installation, please contact your local GM Accessory Distributor Installer (ADI).".

Week of 4/24/2006

Effective 4/24/2006, the following changes will be made to the Vehicle Order Guide:

- Interior section-(U2K) XM Satellite Radio, changed extended description to read " With a wide variety of programming, XM has something to excite any driver. Whether you want to be entertained or informed, to laugh, think, or sing, XM has the

perfect channel for you - coast-to-coast, and in digital-quality sound. 3 trial months - no obligation". Also, changed footnote to read "Available in the 48 contiguous United States. Required $12.95 monthly subscription sold separately. All fees and programming subject to change. Subscription subject to customer agreement. For more information, visit gm.xmradio.com.".

Week of 4/17/2006

Effective 4/17/2006, the following changes will be made to the Vehicle Order Guide:

- Interior section-(UC6) Audio system, AM/FM stereo with 6-disc CD changer, changed extended description to read " seek-and-scan, digital clock, auto-tone control, Radio Data System (RDS), speed-compensated volume, and TheftLock". Also, changed symbol from "A1" to "A" in 1LT column and deleted footnote #1 entirely.

S = Standard Equipment A = Available – (dashes) = Not Available D = ADI Available
■ = Included in Equipment Group □ = Included in Equipment Group but upgradeable

*Indicates availability of feature on multiple models. For example, it indicates feature availability on 2WD and 4WD Models or Rear wheel drive and All-wheel drive Models.

Codes listed in the shaded column titled Ref. Only RPO Code are for internal use only and should not be ordered.

Free Flow RPO Code	Ref. Only RPO Code	Description 1 - Equipment groups 1WT, 1LS, and 1LT available on C*25903, C*25753, C*25743, C*25953, and C*25943 Models. 2 - Equipment group 2LT and 3LT available on C*25753, C*25743, C*25953 and C*25943 Models	Reg., Ext. and Crew Cab			Ext. and Crew Cab	
			Work Truck 1WT[1]	LS 1LS[1]	LT1 1LT[1]	LT2 2LT[2]	LT3 3LT[2]
		Air bags, frontal, driver and right-front passenger 1 - Regular and Extended Cab models includes passenger-side deactivation switch. Never place a rear-facing infant restraint in the front seat of any vehicle equipped with an active frontal air bag. Always use safety belts and the correct child restraints for your child's age and size. Children are safer when properly secured in a rear seat. See the vehicle's Owner's Manual and child safety seat instructions for more safety information.	S[1]	S[1]	S[1]	S[1]	S[1]
CJ3		**Air conditioning**, dual-zone manual climate control with individual climate settings for driver and right-front passenger 1 - Required and only available when (VYU) Snow Plow Prep Package is ordered.	S	S	S	A[1]	A[1]
		Assist handle, front passenger 1 - Also includes rear outboard passenger assist handles on Extended and Crew Cab models.	S[1]	S[1]	S[1]	S[1]	S[1]
	UM7	**Audio system**, AM/FM stereo with seek-and-scan and digital clock	S	--	--	--	--
	UQ5	**Audio system feature**, 4-speaker system	S	S	--	--	--
		Cigarette lighter, on instrument panel	S	S	S	S	S
		Coat hook, driver-side rear 1 - Also includes passenger-side coat hook on Extended and Crew Cab models.	S[1]	S[1]	S[1]	S[1]	S[1]
		Cup holders, front 1 - Also includes rear cupholders on Extended and Crew Cab models.	S[1]	S[1]	S[1]	S[1]	S[1]
		Driver Information Center that monitors numerous different systems depending on vehicle equipment	S	S	S	S	S
BG9		**Floor covering**, Black rubberized-vinyl 1 - Not available with (922) Medium Gray leather seating surfaces.	S	S	A[1]	--	--
		Instrumentation, analog with speedometer, odometer with trip odometer, fuel level, voltmeter, engine temperature, oil pressure and tachometer	S	S	S	S	S
		Lighting, interior with dome and reading lights, backlit instrument panel switches and door handle-activated illuminated entry	S	S	S	S	S
		Mirror, inside rearview manual day/night	S	S	--	--	--
		Power outlets, 2 auxiliary instrument panel-mounted with covers, 12-volt	S	S	S	S	S
	**V	**Seat trim**, vinyl	S	A	--	--	--

Free Flow RPO Code	Ref. Only RPO Code	Description 1 - Equipment groups 1WT, 1LS, and 1LT available on C*25903, C*25753, C*25743, C*25953, and C*25943 Models. 2 - Equipment group 2LT and 3LT available on C*25753, C*25743, C*25953 and C*25943 Models	Reg., Ext. and Crew Cab			Ext. and Crew Cab	
			Work Truck 1WT[1]	LS 1LS[1]	LT1 1LT[1]	LT2 2LT[2]	LT3 3LT[2]
	AE7	**Seats**, front 40/20/40 split-bench, 3-passenger, driver and front passenger manual reclining with outboard head restraints	S	A	--	--	--
		Seats, rear bench, 3-passenger, folding (includes child seat top tether anchor) 1 - Not available with Regular Cab models.	S[1]	S[1]	S[1]	S	S
		Steering column, Tilt-Wheel, adjustable with brake/transmission shift interlock	S	S	S	S	S
		Steering wheel, includes theft-deterrent locking feature	S	S	--	--	--
		Theft-deterrent system, PASSlock II	S	S	S	S	S
		Tools, mechanical jack and wheel wrench located in back of cab	S	S	S	S	S
		Visors, driver and front passenger, padded with cloth trim, extenders, pocket on driver-side and vanity mirror on passenger-side, Shale-colored	S	S	S	S	S
		Warning tones, headlamp on, key-in-ignition, driver and passenger buckle up reminder and turn signal on	S	S	S	S	S
		Air dam, Gray	S	S	S	S	S
	VG3	**Bumper**, front chrome with Gray lower	S	S	S	S	S
	V43	**Bumper**, rear painted, step-style with pad 1 - Not available with (ZW9) pickup box delete.	S[1]	--	--	--	--
		Daytime Running Lamps, with automatic exterior lamp control	S	S	S	S	S
		Glass, Solar-Ray light-tinted, all windows	S	S	--	--	--
	TR3	**Grille**, color-keyed surround with chrome accent bar	S	S	S	S	S
		Headlamps, dual halogen composite with automatic exterior lamp control and flash-to-pass feature	S	S	S	S	S
		Lamps, dual cargo area lamps	S	S	S	S	S
	DE2	**Mirrors**, outside manual, Black, manual-folding	S	S	--	--	--
	ZY1	**Paint**, solid	S	S	S	S	S
	E63	**Pickup box**, Fleetside	S	S	S	S	S
	V76	**Recovery hooks**, front, frame-mounted	S	S	S	S	S
		Tire carrier, outside spare, winch-type mounted under frame at rear	S	S	S	S	S
	QIZ	**Tires**, LT245/75R16E all-season, blackwall 1 - Includes 5 tires with (E63) Fleetside pickup box. Includes 4 tires with (ZW9) pickup box delete.	S[1]	S[1]	S[1]	S[1]	S[1]
		Wheels, 4 - 16" x 6.5" (40.6 cm x 16.5 cm) 8-lug painted steel	S	--	--	--	--
	B71	**Wheel flares**, front and rear 1 - Refer to Color and Trim chart for compatibility. Front only when (ZW9) pickup box delete is ordered.	S[1]	S[1]	S[1]	S[1]	S[1]
		Wipers, front intermittent wet-arm with pulse washers	S	S	S	S	S

2007 Chevrolet Truck Silverado 2500HD Classic — STANDARD EQUIPMENT

Free Flow RPO Code	Ref. Only RPO Code	Description 1 - Equipment groups 1WT, 1LS, and 1LT available on C*25903, C*25753, C*25743, C*25953, and C*25943 Models. 2 - Equipment group 2LT and 3LT available on C*25753, C*25743, C*25953 and C*25943 Models	Reg., Ext. and Crew Cab			Ext. and Crew Cab	
			Work Truck 1WT[1]	LS 1LS[1]	LT1 1LT[1]	LT2 2LT[2]	LT3 3LT[2]
	K68	Alternator, 105 amps 1 - Not available with (VYU) Snow Plow Prep Package.	S[1]	S[1]	S[1]	S[1]	S[1]
		Battery, heavy-duty 600 cold-cranking amps, maintenance-free with rundown protection and retained accessory power 1 - Not standard with (LBZ) Duramax 6.6L Turbo Diesel V8 engine.	S[1]	S[1]	S[1]	S[1]	S[1]
		Brakes, 4-wheel antilock, 4-wheel disc	S	S	S	S	S
	KC4	Cooling, external engine oil cooler, heavy-duty air-to-oil, integral to driver-side of radiator tank	S	S	S	S	S
	LQ4	Engine, Vortec 6.0L V8 SFI (300 hp [223.8 kW] @ 4400 rpm, 360 lb-ft of torque [486.6 N-m] @ 4000 rpm)	S	S	S	S	S
		Exhaust, aluminized stainless-steel muffler and tailpipe	S	S	S	S	S
		Frame, hydroformed ladder-type	S	S	S	S	S
	C6W	GVWR, 9200 lbs. (4173 kg) 1 - Must specify on CC25903, CK25753, and C*25743 models.	S[1]	S[1]	S[1]	S[1]	S[1]
	GT5	Rear axle, 4.10 ratio 1 - Refer to Engine/Axle Chart for availability.	S[1]	S[1]	S[1]	S[1]	S[1]
		Steering, power	S	S	S	S	S
		Suspension, front independent with torsion bar and stabilizer bar	S	S	S	S	S
		Suspension, rear 2-stage multi-leaf springs, semi-elliptic	S	S	S	S	S
	Z85	Suspension Package, Handling/Trailering, heavy-duty, includes 36 mm piston monotube shocks	S	S	S	S	S
	NP2	Transfer case, floor-mounted shifter 1 - Requires 4x4 models and (AE7) front 40/20/40 split-bench seat.	S[1]	S[1]	S[1]	--	--
	MW3	Transmission, 5-speed manual with overdrive 1 - Requires (LQ4) Vortec 6.0L V8 SFI engine and (AE7) front 40/20/40 split-bench seat.	S[1]	S[1]	S[1]	--	--

2007 Chevrolet Truck Silverado 2500HD Classic — EQUIPMENT GROUPS

S = Standard Equipment A = Available -- (dashes) = Not Available D = ADI Available
■ = Included in Equipment Group □ = Included in Equipment Group but upgradeable

No deletions allowed to Equipment Groups. Additional options may be added; check ordering information section for compatibility.

*Indicates availability of feature on multiple models. For example, it indicates feature availability on 2WD and 4WD Models or Rear wheel drive and All-wheel drive Models.

Codes listed in the shaded column titled Ref. Only RPO Code are for internal use only and should not be ordered.

Free Flow RPO Code	Ref. Only RPO Code	Description 1 - Equipment groups 1WT, 1LS, and 1LT available on C*25903, C*25753, C*25743, C*25953, and C*25943 Models. 2 - Equipment group 2LT and 3LT available on C*25753, C*25743, C*25953 and C*25943 Models	Reg., Ext. and Crew Cab			Ext. and Crew Cab	
			Work Truck 1WT[1]	LS 1LS[1]	LT1 1LT[1]	LT2 2LT[2]	LT3 3LT[2]
CJ2		**Air conditioning**, dual-zone automatic climate control with individual climate settings for driver and right-front passenger 1 - Requires Extended and Crew Cab models. Not available with (VYU) Snow Plow Prep Package. 2 - Must be substituted with (CJ3) dual-zone, manual air conditioning when (VYU) Snow Plow Prep Package is ordered.	--	--	A[1]	□[2]	□[2]
UB0		**Audio system**, AM/FM stereo with CD player, seek-and-scan, digital clock, auto-tone control, Radio Data System (RDS) and speed-compensated volume 1 - Upgradeable to (UC6) AM/FM stereo with 6-disc in-dash CD changer.	A	■	□[1]	□[1]	--
UC6		**Audio system**, AM/FM stereo with 6-disc CD changer, seek-and-scan, digital clock, auto-tone control, Radio Data System (RDS), speed-compensated volume and TheftLock	--	--	A	A	■
	UQ3	**Audio system feature**, speaker system 1 - Includes 4 speakers on Regular Cab and 6 speakers on Extended and Crew Cab Models.	--	--	■[1]	--	--
	UQ7	**Audio system feature**, Bose premium speaker system with sub-woofer in center console 1 - Included and only available with (A95) front reclining bucket seats.	--	--	A[1]	■	■
	UK6	**Audio system controls**, rear with 2 headphone jacks (headphones not included), power outlet and controls for volume, station selection and media 1 - Requires Crew Cab Models. Included and only available with (A95) front reclining bucket seats. 2 - Requires Crew Cab models.	--	--	A[1]	■[2]	■[2]
	D07	**Console**, floor with storage compartment and dual cup holders 1 - Included and only available with (A95) front reclining bucket seats.	--	--	A[1]	■	■
	DK7	**Console**, overhead mini with map lights 1 - Not available with (CF5) power sunroof.	--	--	■	■[1]	■[1]
K34		**Cruise control**, electronic with set and resume speed	A	■	■	■	■
C49		**Defogger**, rear-window electric 1 - Not available with (A28) sliding rear window or (C42) air conditioning delete. Available with Fleet and Government order types only. 2 - Not available with (A28) sliding rear window.	A[1]	■[2]	■[2]	■[2]	■[2]

Free Flow RPO Code	Ref. Only RPO Code	Description 1 - Equipment groups 1WT, 1LS, and 1LT available on C*25903, C*25753, C*25743, C*25953, and C*25943 Models. 2 - Equipment group 2LT and 3LT available on C*25753, C*25743, C*25953 and C*25943 Models	Reg., Ext. and Crew Cab			Ext. and Crew Cab	
			Work Truck 1WT[1]	LS 1LS[1]	LT1 1LT[1]	LT2 2LT[2]	LT3 3LT[2]
AU3		**Door locks**, power 1 - Available with Fleet and Government order types only.	A[1]	A	■	■	■
B30		**Floor covering**, color-keyed carpeting with rubberized vinyl floor mats 1 - Available with Fleet and Government order types only. Not available with (**V) vinyl interior trim. 2 - Not available with (**V) vinyl interior trim. 3 - May be substituted with (BG9) rubberized vinyl floor covering. Not available with (**V) vinyl interior trim.	A[1]	A[2]	□[3]	■	■
	DF5	**Mirror**, inside rearview auto-dimming with 8-point compass and outside temperature display	--	--	■	■	■
	AU0	**Remote Keyless Entry**, with 2 transmitters, panic button and content theft alarm	--	--	■	■	■
	**D	**Seat trim**, Custom Cloth	A	■	■	■	--
	**2	**Seat trim**, leather 1 - Not available on Regular Cab models. Extended Cab includes front leather seating surfaces with rear vinyl bench. Crew Cab includes front and rear leather-appointed seating surfaces.	--	--	A[1]	A[1]	■[1]
	AE7	**Seats**, front 40/20/40 split-bench, 3-passenger, driver and front passenger manual reclining, center fold-down armrest with storage, adjustable outboard head restraints and storage pockets on Extended Cab models 1 - Requires (**D) Custom Cloth seat trim.	A[1]	■[1]	■	--	--
A95		**Seats**, front bucket, includes (AG1) 6-way power driver seat adjuster, front passenger manual recline, adjustable outboard head restraints, inboard armrests and storage pockets 1 - Requires Extended or Crew Cab Models. - Requires Fleet and Government order types only. Includes (D07) floor console and (UQ7) Bose Premium speaker system. Also includes (UK6) rear audio controls on Crew Cab Models. On 4WD Models, also requires (NP1) electronic shift transfer case.	--	--	A[1]	■	--
	AN3	**Seats**, front bucket, includes 10-way power driver and front passenger seat adjusters, 2-way power lumbar control, heated seat cushions and seatbacks, 2-position driver memory, adjustable outboard head restraints, floor console, dual inboard armrests and storage pockets	--	--	--	--	■
AG1		**Seat adjuster**, driver 6-way power 1 - Included with (**2) Seat trim, leather on Extended and Crew Cab Models. Included with (A95) front reclining bucket seats. 2 - With (AN3) front full-feature bucket seats, includes 10-way power seat adjusters.	--	--	A[1]	■	■[2]
	AG2	**Seat adjuster**, front passenger 10-way power 1 - Included and only available with (AN3) front full-feature bucket seats.	--	--	--	--	■[1]
	NP5	**Steering wheel**, leather-wrapped, Black with theft-deterrent locking feature	--	--	■	■	■

Free Flow RPO Code	Ref. Only RPO Code	Description 1 - Equipment groups 1WT, 1LS, and 1LT available on C*25903, C*25753, C*25743, C*25953, and C*25943 Models. 2 - Equipment group 2LT and 3LT available on C*25753, C*25743, C*25953 and C*25943 Models	Reg., Ext. and Crew Cab			Ext. and Crew Cab	
			Work Truck 1WT[1]	LS 1LS[1]	LT1 1LT[1]	LT2 2LT[2]	LT3 3LT[2]
UK3		**Steering wheel controls**, mounted audio and Driver Information Center controls which provides access to enhanced Driver Information Center features and information	--	--	A	■	■
	A31	**Windows**, power with driver and front passenger Express-Down	--	--	■	■	■
VB3		**Bumper**, rear chrome, step-style with pad 1 - Not available with (ZW9) pickup box delete.	A[1]	■[1]	■[1]	■[1]	■
T96		**Fog lamps**, front, halogen 1 - With 2WD models requires (V76) front frame-mounted recovery hooks.	--	--	A[1]	■	■
AJ1		**Glass**, Solar-Ray deep-tinted (all windows except light-tinted glass on windshield) 1 - With Extended Cab models, includes rear window and rear quarter windows. With (C49) rear-window defogger, includes light-tinted rear.	A[1]	A[1]	■[1]	■[1]	■[1]
	DL8	**Mirrors**, outside heated power-adjustable, Black, manual-folding 1 - Upgradeable to (DL3) outside heated, power-adjustable, power-folding mirrors or (DPN) outside vertical camper mirrors.	--	--	□[1]	□[1]	--
DL3		**Mirrors**, outside heated power-adjustable, power-folding and driver-side auto-dimming, Black with integrated turn signal indicators 1 - Curb-tilt feature requires (UK3) steering-wheel mounted audio controls. 2 - Upgradeable to (DPN) outside vertical camper mirrors. Includes curb-tilt when (UK3) steering-wheel mounted audio controls is ordered.	--	--	A[1]	A[1]	□[2]
B85		**Moldings**, bodyside 1 - Moldings are Black and not available with (ZW9) pickup box delete. 2 - Moldings are color-keyed and not available with (ZW9) pickup box delete. Refer to Color and Trim Chart for compatibility.	--	A[1]	■[2]	■[2]	■[2]
	PY2	**Wheels**, 4 - 16" x 6.5" (40.6 cm x 16.5 cm) 8-lug chrome-styled steel, includes chrome center caps and steel spare 1 - Upgradeable to (PY0) 4 - 16" x 6.5" (40.6 cm x 16.5 cm) 8-lug polished forged aluminum wheels.	--	■	□[1]	□[1]	--
PY0		**Wheels**, 4 - 16" x 6.5" (40.6 cm x 16.5 cm) 8-lug polished forged aluminum, includes chrome center caps and steel spare	--	--	A	A	■
NP1		**Transfer case**, electronic shift with push-button controls 1 - Requires 4x4 models. Requires (MT1) heavy-duty 4-speed automatic transmission or (MW7) Allison 1000 6-speed automatic transmission.	--	--	A[1]	■[1]	■[1]
MT1		**Transmission**, 4-speed automatic, heavy-duty, electronically controlled with overdrive and tow/haul mode. Includes (KNP) external transmission oil cooler 1 - Requires (LQ4) Vortec 6.0L V8 SFI engine.	A[1]	A[1]	A[1]	■[1]	■[1]

S = Standard Equipment A = Available – (dashes) = Not Available D = ADI Available
■ = Included in Equipment Group □ = Included in Equipment Group but upgradeable

No deletions allowed to Equipment Groups. Additional options may be added; check ordering information section for compatibility.

*Indicates availability of feature on multiple models. For example, it indicates feature availability on 2WD and 4WD Models or Rear wheel drive and All-wheel drive Models.

Codes listed in the shaded column titled Ref. Only RPO Code are for internal use only and should not be ordered.

Free Flow RPO Code	Ref. Only RPO Code	Description 1 - Equipment groups 1WT, 1LS, and 1LT available on C*25903, C*25753, C*25743, C*25953, and C*25943 Models. 2 - Equipment group 2LT and 3LT available on C*25753, C*25743, C*25953 and C*25943 Models	Reg., Ext. and Crew Cab			Ext. and Crew Cab	
			Work Truck 1WT[1]	LS 1LS[1]	LT1 1LT[1]	LT2 2LT[2]	LT3 3LT[2]
CJ2		**Air conditioning**, dual-zone automatic climate control with individual climate settings for driver and right-front passenger 1 - Requires Extended and Crew Cab models. Not available with (VYU) Snow Plow Prep Package. 2 - Must be substituted with (CJ3) dual-zone, manual air conditioning when (VYU) Snow Plow Prep Package is ordered.	–	–	A[1]	□[2]	□[2]
UB0		**Audio system**, AM/FM stereo with CD player, seek-and-scan, digital clock, auto-tone control, Radio Data System (RDS) and speed-compensated volume 1 - Upgradeable to (UC6) AM/FM stereo with 6-disc in-dash CD changer.	A	■	□[1]	□[1]	–
UC6		**Audio system**, AM/FM stereo with 6-disc CD changer, seek-and-scan, digital clock, auto-tone control, Radio Data System (RDS), speed-compensated volume and TheftLock	–	–	A	A	■
	UQ3	**Audio system feature**, speaker system 1 - Includes 4 speakers on Regular Cab and 6 speakers on Extended and Crew Cab Models.	–	–	■[1]	–	–
	UQ7	**Audio system feature**, Bose premium speaker system with sub-woofer in center console 1 - Included and only available with (A95) front reclining bucket seats.	–	–	A[1]	■	■
	UK6	**Audio system controls**, rear with 2 headphone jacks (headphones not included), power outlet and controls for volume, station selection and media 1 - Requires Crew Cab Models. Included and only available with (A95) front reclining bucket seats. 2 - Requires Crew Cab models.	–	–	A[1]	■[2]	■[2]
	D07	**Console**, floor with storage compartment and dual cup holders 1 - Included and only available with (A95) front reclining bucket seats.	–	–	A[1]	■	■
	DK7	**Console**, overhead mini with map lights 1 - Not available with (CF5) power sunroof.	–	–	■	■[1]	■[1]
K34		**Cruise control**, electronic with set and resume speed	A	■	■	■	■
C49		**Defogger**, rear-window electric 1 - Not available with (A28) sliding rear window or (C42) air conditioning delete. Available with Fleet and Government order types only. 2 - Not available with (A28) sliding rear window.	A[1]	■[2]	■[2]	■[2]	■[2]

Free Flow RPO Code	Ref. Only RPO Code	Description 1 - Equipment groups 1WT, 1LS, and 1LT available on C*25903, C*25753, C*25743, C*25953, and C*25943 Models. 2 - Equipment group 2LT and 3LT available on C*25753, C*25743, C*25953 and C*25943 Models	Reg., Ext. and Crew Cab			Ext. and Crew Cab	
			Work Truck 1WT[1]	LS 1LS[1]	LT1 1LT[1]	LT2 2LT[2]	LT3 3LT[2]
AU3		**Door locks**, power 1 - Available with Fleet and Government order types only.	A[1]	A	■	■	■
B30		**Floor covering**, color-keyed carpeting with rubberized vinyl floor mats 1 - Available with Fleet and Government order types only. Not available with (**V) vinyl interior trim. 2 - Not available with (**V) vinyl interior trim. 3 - May be substituted with (BG9) rubberized vinyl floor covering. Not available with (**V) vinyl interior trim.	A[1]	A[2]	□[3]	■	■
	DF5	**Mirror**, inside rearview auto-dimming with 8-point compass and outside temperature display	–	–	■	■	■
	AU0	**Remote Keyless Entry**, with 2 transmitters, panic button and content theft alarm	–	–	■	■	■
	**D	**Seat trim**, Custom Cloth	A	■	■	■	–
	**2	**Seat trim**, leather 1 - Not available on Regular Cab models. Extended Cab includes front leather seating surfaces with rear vinyl bench. Crew Cab includes front and rear leather-appointed seating surfaces.	–	–	A[1]	A[1]	■[1]
	AE7	**Seats**, front 40/20/40 split-bench, 3-passenger, driver and front passenger manual reclining, center fold-down armrest with storage, adjustable outboard head restraints and storage pockets on Extended Cab models 1 - Requires (**D) Custom Cloth seat trim.	A[1]	■[1]	■	–	–
A95		**Seats**, front bucket, includes (AG1) 6-way power driver seat adjuster, front passenger manual recline, adjustable outboard head restraints, inboard armrests and storage pockets 1 - Requires Extended or Crew Cab Models. - Requires Fleet and Government order types only. Includes (D07) floor console and (UQ7) Bose Premium speaker system. Also includes (UK6) rear audio controls on Crew Cab Models. On 4WD Models, also requires (NP1) electronic shift transfer case.	–	–	A[1]	■	–
	AN3	**Seats**, front bucket, includes 10-way power driver and front passenger seat adjusters, 2-way power lumbar control, heated seat cushions and seatbacks, 2-position driver memory, adjustable outboard head restraints, floor console, dual inboard armrests and storage pockets	–	–	–	–	■
AG1		**Seat adjuster**, driver 6-way power 1 - Included with (**2) Seat trim, leather on Extended and Crew Cab Models. Included with (A95) front reclining bucket seats. 2 - With (AN3) front full-feature bucket seats, includes 10-way power seat adjusters.	–	–	A[1]	■	■[2]
	AG2	**Seat adjuster**, front passenger 10-way power 1 - Included and only available with (AN3) front full-feature bucket seats.	–	–	–	–	■[1]
	NP5	**Steering wheel**, leather-wrapped, Black with theft-deterrent locking feature	–	–	■	■	■

Free Flow RPO Code	Ref. Only RPO Code	Description 1 - Equipment groups 1WT, 1LS, and 1LT available on C*25903, C*25753, C*25743, C*25953, and C*25943 Models. 2 - Equipment group 2LT and 3LT available on C*25753, C*25743, C*25953 and C*25943 Models	Reg., Ext. and Crew Cab			Ext. and Crew Cab	
			Work Truck 1WT[1]	LS 1LS[1]	LT1 1LT[1]	LT2 2LT[2]	LT3 3LT[2]
UK3		**Steering wheel controls**, mounted audio and Driver Information Center controls which provides access to enhanced Driver Information Center features and information	--	--	A	■	■
	A31	**Windows**, power with driver and front passenger Express-Down	--	--	■	■	■
VB3		**Bumper**, rear chrome, step-style with pad 1 - Not available with (ZW9) pickup box delete.	A[1]	■[1]	■[1]	■[1]	■
T96		**Fog lamps**, front, halogen 1 - With 2WD models requires (V76) front frame-mounted recovery hooks.	--	--	A[1]	■	■
AJ1		**Glass**, Solar-Ray deep-tinted (all windows except light-tinted glass on windshield) 1 - With Extended Cab models, includes rear window and rear quarter windows. With (C49) rear-window defogger, includes light-tinted rear.	A[1]	A[1]	■[1]	■[1]	■[1]
	DL8	**Mirrors**, outside heated power-adjustable, Black, manual-folding 1 - Upgradeable to (DL3) outside heated, power-adjustable, power-folding mirrors or (DPN) outside vertical camper mirrors.	--	--	□[1]	□[1]	--
DL3		**Mirrors**, outside heated power-adjustable, power-folding and driver-side auto-dimming, Black with integrated turn signal indicators 1 - Curb-tilt feature requires (UK3) steering-wheel mounted audio controls. 2 - Upgradeable to (DPN) outside vertical camper mirrors. Includes curb-tilt when (UK3) steering-wheel mounted audio controls is ordered.	--	--	A[1]	A[1]	□[2]
B85		**Moldings**, bodyside 1 - Moldings are Black and not available with (ZW9) pickup box delete. 2 - Moldings are color-keyed and not available with (ZW9) pickup box delete. Refer to Color and Trim Chart for compatibility.	--	A[1]	■[2]	■[2]	■[2]
	PY2	**Wheels**, 4 - 16" x 6.5" (40.6 cm x 16.5 cm) 8-lug chrome-styled steel, includes chrome center caps and steel spare 1 - Upgradeable to (PY0) 4 - 16" x 6.5" (40.6 cm x 16.5 cm) 8-lug polished forged aluminum wheels.	--	■	□[1]	□[1]	--
PY0		**Wheels**, 4 - 16" x 6.5" (40.6 cm x 16.5 cm) 8-lug polished forged aluminum, includes chrome center caps and steel spare	--	--	A	A	■
NP1		**Transfer case**, electronic shift with push-button controls 1 - Requires 4x4 models. Requires (MT1) heavy-duty 4-speed automatic transmission or (MW7) Allison 1000 6-speed automatic transmission.	--	--	A[1]	■[1]	■[1]
MT1		**Transmission**, 4-speed automatic, heavy-duty, electronically controlled with overdrive and tow/haul mode. Includes (KNP) external transmission oil cooler 1 - Requires (LQ4) Vortec 6.0L V8 SFI engine.	A[1]	A[1]	A[1]	■[1]	■[1]

ADDITIONAL OPTIONS

Free Flow RPO Code	Ref. Only RPO Code	Description 1 - Equipment groups 1WT, 1LS, and 1LT available on C*25903, C*25753, C*25743, C*25953, and C*25943 Models. 2 - Equipment group 2LT and 3LT available on C*25753, C*25743, C*25953 and C*25943 Models	Reg., Ext. and Crew Cab			Ext. and Crew Cab	
			Work Truck 1WT[1]	LS 1LS[1]	LT1 1LT[1]	LT2 2LT[2]	LT3 3LT[2]
CJ3		**Air conditioning**, dual-zone manual climate control with individual climate settings for driver and right-front passenger 1 - Required and only available when (VYU) Snow Plow Prep Package is ordered.	S	S	S	A[1]	A[1]
C42		**Air conditioning delete**, provides heater only 1 - Requires Regular Cab models.	A[1]	--	--	--	--
CJ2		**Air conditioning**, dual-zone automatic climate control with individual climate settings for driver and right-front passenger 1 - Requires Extended and Crew Cab models. Not available with (VYU) Snow Plow Prep Package. 2 - Must be substituted with (CJ3) dual-zone, manual air conditioning when (VYU) Snow Plow Prep Package is ordered.	--	--	A[1]	□[2]	□[2]
UB0		**Audio system**, AM/FM stereo with CD player, seek-and-scan, digital clock, auto-tone control, Radio Data System (RDS) and speed-compensated volume 1 - Upgradeable to (UC6) AM/FM stereo with 6-disc in-dash CD changer.	A	■	□[1]	□[1]	--
UC6		**Audio system**, AM/FM stereo with 6-disc CD changer, seek-and-scan, digital clock, auto-tone control, Radio Data System (RDS), speed-compensated volume and TheftLock	--	--	A	A	■
K34		**Cruise control**, electronic with set and resume speed	A	■	■	■	■
C49		**Defogger**, rear-window electric 1 - Not available with (A28) sliding rear window or (C42) air conditioning delete. Available with Fleet and Government order types only. 2 - Not available with (A28) sliding rear window.	A[1]	■[2]	■[2]	■[2]	■[2]
AU3		**Door locks**, power 1 - Available with Fleet and Government order types only.	A[1]	A	■	■	■
U42		**Entertainment system**, rear seat DVD player with LCD display and 2 sets of wireless headphones 1 - Requires Crew Cab models and (CJ2) dual-zone automatic air conditioning.	--	--	--	A[1]	A[1]
BG9		**Floor covering**, Black rubberized-vinyl 1 - Not available with (922) Medium Gray leather seating surfaces.	S	S	A[1]	--	--
B30		**Floor covering**, color-keyed carpeting with rubberized vinyl floor mats 1 - Available with Fleet and Government order types only. Not available with (**V) vinyl interior trim. 2 - Not available with (**V) vinyl interior trim. 3 - May be substituted with (BG9) rubberized vinyl floor covering. Not available with (**V) vinyl interior trim.	A[1]	A[2]	□[3]	■	■

ADDITIONAL OPTIONS

Free Flow RPO Code	Ref. Only RPO Code	Description 1 - Equipment groups 1WT, 1LS, and 1LT available on C*25903, C*25753, C*25743, C*25953, and C*25943 Models. 2 - Equipment group 2LT and 3LT available on C*25753, C*25743, C*25953 and C*25943 Models	Reg., Ext. and Crew Cab			Ext. and Crew Cab	
			Work Truck 1WT[1]	LS 1LS[1]	LT1 1LT[1]	LT2 2LT[2]	LT3 3LT[2]
UE1		**OnStar**, 1-year of Safe and Sound plan. Includes Automatic Notification of Air Bag Deployment, Stolen Vehicle Location Assistance, Emergency Services, Roadside Assistance, Remote Door Unlock, OnStar Vehicle Diagnostics, Hands-Free Calling, AccidentAssist and Remote Horn & Lights 1 - OnStar services require vehicle electrical system (including battery), wireless service and GPS satellite signals to be available and operating for features to function properly. OnStar acts as a link to existing emergency service providers. OnStar Vehicle Diagnostics available on most 2004 MY and newer GM vehicles. Diagnostic capability varies by model. Visit onstar.com for system limitations and details. Requires (UK3) steering-wheel mounted audio controls. Not available with a ship-to of Puerto Rico or the Virgin Islands.	--	--	A[1]	A[1]	A[1]
PDB		**OnStar Plus Package**, includes (U2K) XM Satellite Radio, (UE1) OnStar and (UK3) steering-wheel mounted audio controls 1 - Package does not include (U2K) XM Satellite Radio when ordered outside the 48 contiguous United States. Not available with a ship-to of Puerto Rico or the Virgin Islands.	--	--	A[1]	A[1]	A[1]
R6Q		**OnStar Plus Package discount not desired** 1 - Required when content within option package is ordered and entire package is not desired.	--	--	A[1]	A[1]	A[1]
A95		**Seats**, front bucket, includes (AG1) 6-way power driver seat adjuster, front passenger manual recline, adjustable outboard head restraints, inboard armrests and storage pockets 1 - Requires Extended or Crew Cab Models. - Requires Fleet and Government order types only. Includes (D07) floor console and (UQ7) Bose Premium speaker system. Also includes (UK6) rear audio controls on Crew Cab Models. On 4WD Models, also requires (NP1) electronic shift transfer case.	--	--	A[1]	■	--
AG1		**Seat adjuster**, driver 6-way power 1 - Included with (**2) Seat trim, leather on Extended and Crew Cab Models. Included with (A95) front reclining bucket seats. 2 - With (AN3) front full-feature bucket seats, includes 10-way power seat adjusters.	--	--	A[1]	■	■[2]
DNH		**Regular production accessory**, Underseat storage, rear, lockable 1 - Requires Extended Cab models. For additional GM Accessory Offerings and installation, please contact your local GM Accessory Distributor Installer (ADI).	A/D[1]	A/D[1]	A/D[1]	A/D[1]	A/D[1]
UK3		**Steering wheel controls**, mounted audio and Driver Information Center controls which provides access to enhanced Driver Information Center features and information	--	--	A	■	■
CF5		**Sunroof**, power, tilt-sliding with express-open and wind deflector, includes (UG1) Universal Home Remote 1 - Requires (CJ2) dual-zone automatic air conditioning. Not available with (VYU) Snow Plow Prep Package.	--	--	--	A[1]	A[1]

ADDITIONAL OPTIONS

Free Flow RPO Code	Ref. Only RPO Code	Description 1 - Equipment groups 1WT, 1LS, and 1LT available on C*25903, C*25753, C*25743, C*25953, and C*25943 Models. 2 - Equipment group 2LT and 3LT available on C*25753, C*25743, C*25953 and C*25943 Models	Reg., Ext. and Crew Cab			Ext. and Crew Cab	
			Work Truck 1WT[1]	LS 1LS[1]	LT1 1LT[1]	LT2 2LT[2]	LT3 3LT[2]
A28		**Window**, manual rear-sliding, deep-tinted 1 - Requires (AJ1) Solar-Ray deep-tinted glass. Deletes or not available with (C49) rear-window defogger when ordered. Not available with (ZW9) pickup box delete.	A[1]	A[1]	A[1]	A[1]	A[1]
U2K		**XM Satellite Radio**. With a wide variety of programming, XM has something to excite any driver. Whether you want to be entertained or informed, to laugh, think, or sing, XM has the perfect channel for you - coast-to-coast, and in digital-quality sound. 3 trial months - no obligation 1 - Available in the 48 contiguous United States. Required $12.95 monthly subscription sold separately. All fees and programming subject to change. Subscription subject to customer agreement. For more information, visit gm.xmradio.com.	--	--	A[1]	A[1]	A[1]
VB3		**Bumper**, rear chrome, step-style with pad 1 - Not available with (ZW9) pickup box delete.	A[1]	■[1]	■[1]	■[1]	■
VF7		**Bumper**, rear delete (vehicles registered in certain states must have a rear bumper to be operated on their roads, consult local laws) 1 - Not available with (Z82) heavy-duty trailering equipment or (ZW9) pickup box delete.	A[1]	A[1]	A[1]	--	--
T96		**Fog lamps**, front, halogen 1 - With 2WD models requires (V76) front frame-mounted recovery hooks.	--	--	A[1]	■	■
AJ1		**Glass**, Solar-Ray deep-tinted (all windows except light-tinted glass on windshield) 1 - With Extended Cab models, includes rear window and rear quarter windows. With (C49) rear-window defogger, includes light-tinted rear.	A[1]	A[1]	■[1]	■[1]	■[1]
U01		**Lamps**, Amber roof marker 1 - Not available with (YF5) California state emissions requirements.	A[1]	A[1]	A[1]	A[1]	A[1]
DF2		**Mirrors**, outside high-visibility camper-style, Black, manual-folding and extension, includes a dual-segment mirror on the driver-side that provides enhanced wide angle capacity (not recommended for bodies or trailers wider than 86" [218.4 cm])	A	A	--	--	--
DL3		**Mirrors**, outside heated power-adjustable, power-folding and driver-side auto-dimming. Black with integrated turn signal indicators 1 - Curb-tilt feature requires (UK3) steering-wheel mounted audio controls. 2 - Upgradeable to (DPN) outside vertical camper mirrors. Includes curb-tilt when (UK3) steering-wheel mounted audio controls is ordered.	--	--	A[1]	A[1]	□[2]
DPN		**Mirrors**, outside heated power-adjustable vertical camper manual-folding and extension, integrated turn signal indicators and lower convex spotter glass (convex glass is not heated)	--	--	A	A	A

ADDITIONAL OPTIONS

Free Flow RPO Code	Ref. Only RPO Code	Description 1 - Equipment groups 1WT, 1LS, and 1LT available on C*25903, C*25753, C*25743, C*25953, and C*25943 Models. 2 - Equipment group 2LT and 3LT available on C*25753, C*25743, C*25953 and C*25943 Models	Reg., Ext. and Crew Cab			Ext. and Crew Cab	
			Work Truck 1WT[1]	LS 1LS[1]	LT1 1LT[1]	LT2 2LT[1]	LT3 3LT[2]
B85		Moldings, bodyside 1 - Moldings are Black and not available with (ZW9) pickup box delete. 2 - Moldings are color-keyed and not available with (ZW9) pickup box delete. Refer to Color and Trim Chart for compatibility.	–	A[1]	■[2]	■[2]	■[2]
ZW9		Pickup box, delete 1 - Requires C*259*3 models.	A[1]	A[1]	A[1]	A[1]	A[1]
BVE		Regular production accessory, Assist steps, chrome plated tubular, stainless steel 1 - Not available with (ZW9) pickup box delete. For additional GM Accessory Offerings and Installation, please contact your local GM Accessory Distributor Installer (ADI).	A/D[1]	A/D[1]	A/D[1]	A/D[1]	A/D[1]
BVS		Regular production accessory, Assist steps, Black coated tubular, stainless steel 1 - Not available with (ZW9) pickup box delete. For additional GM Accessory Offerings and Installation, please contact your local GM Accessory Distributor Installer (ADI).	A/D[1]	A/D[1]	A/D[1]	A/D[1]	A/D[1]
PPB		Regular production accessory, Pickup bed extender, brushed aluminum 1 - Not available with (ZW9) pickup box delete. For additional GM Accessory Offerings and Installation, please contact your local GM Accessory Distributor Installer (ADI).	A/D[1]	A/D[1]	A/D[1]	A/D[1]	A/D[1]
PUB		Regular production accessory, Pickup bed protectors, Top side rails, Black molded 1 - Not available with (ZW9) pickup box delete, (E95) Regular production accessory, soft, Black tonneau cover, or (EN6) Regular production accessory, hard, Black tonneau cover. For additional GM Accessory Offerings and Installation, please contact your local GM Accessory Distributor Installer (ADI).	A/D[1]	A/D[1]	A/D[1]	A/D[1]	A/D[1]
E95		Regular production accessory, Tonneau cover, Black, soft 1 - Not available with (PUB) Regular production accessory, top side rail, Black-molded, pickup bed protectors, or (ZW9) pickup box delete. For additional GM Accessory Offerings and Installation, please contact your local GM Accessory Distributor Installer (ADI).	A/D[1]	A/D[1]	A/D[1]	A/D[1]	A/D[1]
EN6		Regular production accessory, Tonneau cover, Black, hard, folding, lockable 1 - Not available with (PUB) Regular production accessory, top side rail, Black-molded, pickup bed protectors, or (ZW9) pickup box delete. For additional GM Accessory Offerings and Installation, please contact your local GM Accessory Distributor Installer (ADI).	A/D[1]	A/D[1]	A/D[1]	A/D[1]	A/D[1]
SAF		Spare tire lock, keyed cylinder lock that utilizes same key as ignition and door 1 - Not available with (ZW9) pickup box delete.	A[1]	A[1]	A[1]	A[1]	A[1]
QIW		Tires, LT245/75R16E on-/off-road, blackwall 1 - Includes 4 tires and (ZHH) LT245/75R16E all-season blackwall spare tire with (E63) Fleetside pickup box. Includes 4 tires with (ZW9) pickup box delete.	A[1]	A[1]	A[1]	A[1]	A[1]

ADDITIONAL OPTIONS

Free Flow RPO Code	Ref. Only RPO Code	Description 1 - Equipment groups 1WT, 1LS, and 1LT available on C*25903, C*25753, C*25743, C*25953, and C*25943 Models. 2 - Equipment group 2LT and 3LT available on C*25753, C*25743, C*25953 and C*25943 Models	Reg., Ext. and Crew Cab			Ext. and Crew Cab	
			Work Truck 1WT[1]	LS 1LS[1]	LT1 1LT[1]	LT2 2LT[1]	LT3 3LT[2]
ZHH		Tire, spare LT245/75R16E all-season, blackwall, located at rear underbody of vehicle 1 - Requires C*259*3 models and (ZW9) pickup box delete.	A[1]	A[1]	A[1]	A[1]	A[1]
PY0		Wheels, 4 - 16" x 6.5" (40.6 cm x 16.5 cm) 8-lug polished forged aluminum, includes chrome center caps and steel spare	–	–	A	A	■
K47		Air cleaner, high-capacity 1 - Included with (LBZ) Duramax 6.6L Turbo Diesel V8 engine, (Z82) heavy-duty trailering equipment or (VYU) Snow Plow Prep Package.	A[1]	A[1]	A[1]	A[1]	A[1]
KL5		Alternative fuel conversions, conversion-ready engine, includes internal modifications for operation with natural or propane gas 1 - Requires (LQ4) Vortec 6.0L V8 SFI engine and (MT1) heavy-duty 4-speed automatic transmission.	A[1]	A[1]	A[1]	A[1]	A[1]
TP2		Battery, auxiliary heavy-duty 600 cold-cranking amps, maintenance-free 1 - Not available with (LBZ) Duramax 6.6L Turbo Diesel V8 engine.	A[1]	A[1]	A[1]	A[1]	A[1]
G80		Differential, heavy-duty automatic locking rear	A	A	A	A	A
FE9		Emissions, Federal requirements	A	A	A	A	A
YF5		Emissions, California state requirements	A	A	A	A	A
NE1		Emissions, Maine, Massachusetts, New York or Vermont state requirements	A	A	A	A	A
NB8		Emissions override, California, Massachusetts or New York (for vehicles ordered by dealers in states of California, Massachusetts or New York with Federal emissions) 1 - Requires (FE9) Federal emissions requirements.	A[1]	A[1]	A[1]	A[1]	A[1]
NC7		Emissions override, Federal (for vehicles ordered by dealers in Federal emission states with California, New York, Vermont, Massachusetts or Maine emissions; may also be used by dealers in states of California, New York, Vermont, Massachusetts or Maine to order different state-specific emissions) 1 - Requires (YF5) California state emissions requirements or (NE1) New York, Vermont, Massachusetts or Maine state emissions requirements.	A[1]	A[1]	A[1]	A[1]	A[1]
K05		Engine block heater 1 - Included with (LBZ) Duramax 6.6L Turbo Diesel V8 engine.	A[1]	A[1]	A[1]	A[1]	A[1]
L18		Engine, Vortec 8.1L V8 SFI (330 hp [245.8 kW] @ 4200 rpm, 450 lb-ft of torque [607.5 N-m] @ 3200 rpm)	A	A	A	A	A

ADDITIONAL OPTIONS

Free Flow RPO Code	Ref. Only RPO Code	Description 1 - Equipment groups 1WT, 1LS, and 1LT available on C*25903, C*25753, C*25743, C*25953, and C*25943 Models. 2 - Equipment group 2LT and 3LT available on C*25753, C*25743, C*25953 and C*25943 Models	Reg., Ext. and Crew Cab			Ext. and Crew Cab	
			Work Truck 1WT[1]	LS 1LS[1]	LT1 1LT[1]	LT2 2LT[2]	LT3 3LT[2]
LBZ		**Engine**, Duramax 6.6L Turbo Diesel V8 (360 hp [268.0 kW] @ 3200 rpm, 650 lb-ft of torque [881.0 N-m] @ 1600 rpm) 1 - Requires (MW7) Allison 1000 6-speed automatic transmission. Includes (TQ3) heavy-duty dual, 770 cold-cranking-amp battery, (KG3) 145-amp alternator, (K47) high-capacity air cleaner and (K05) engine block heater.	A[1]	A[1]	A[1]	A[1]	A[1]
V10		**Covers**, radiator grille and front bumper openings for diesel engines in winter weather 1 - Requires (LBZ) Duramax 6.6L Turbo Diesel V8 engine and is required on orders with "Ship To" locations within the following states: Maine, New Hampshire, Vermont, Minnesota, North Dakota, South Dakota, Montana, Alaska, Idaho, Wisconsin, Wyoming, Michigan, Colorado and New York.	A[1]	A[1]	A[1]	A[1]	A[1]
PDN		**Heavy-Duty Power Package**, includes (LBZ) Duramax 6.6L Turbo Diesel engine, (MW7) Allison 1000 6-speed automatic transmission and (G80) heavy-duty rear locking differential	A	A	A	A	A
R6Y		**Heavy-Duty Power Package discount not desired**	A	A	A	A	A
GT4		**Rear axle**, 3.73 ratio 1 - Refer to Engine/Axle Chart for availability.	A[1]	A[1]	A[1]	A[1]	A[1]
NZZ		**Skid Plate Package**, includes aluminum front underbody shield starting behind front bumper and running to first cross-member, protecting front underbody, oil pan, differential case and transfer case, frame-mounted shields 1 - Requires 4x4 models. Included with (VYU) Snow Plow Prep Package.	A[1]	A[1]	A[1]	A[1]	A[1]
VYU		**Snow Plow Prep Package**, includes 10-amp power for backup and roof emergency light, (KG3) 145-amp alternator, high-flow front bumper, forward lamp wiring harness, 1.65" (42 mm) access hole with grommet in front of dash panel, roof beacon lamp provisions with switch on the instrument panel, instrument panel jumper wiring harness for electric trailer brake controller, (K47) high-capacity air cleaner and (NZZ) Skid Plate Package 1 - Requires 4x4 models and not available with (CJ2) dual-zone automatic air conditioning. With models CK25953 not available with (LBZ) Duramax 6.6L Turbo Diesel V8 engine. With models CK25*43 requires (LQ4) Vortec 6.0L V8 SFI engine.	A[1]	A[1]	A[1]	A[1]	A[1]

ADDITIONAL OPTIONS

Free Flow RPO Code	Ref. Only RPO Code	Description 1 - Equipment groups 1WT, 1LS, and 1LT available on C*25903, C*25753, C*25743, C*25953, and C*25943 Models. 2 - Equipment group 2LT and 3LT available on C*25753, C*25743, C*25953 and C*25943 Models	Reg., Ext. and Crew Cab			Ext. and Crew Cab	
			Work Truck 1WT[1]	LS 1LS[1]	LT1 1LT[1]	LT2 2LT[2]	LT3 3LT[2]
Z82		**Trailering equipment**, heavy-duty, includes trailering hitch platform, 7-wire harness (harness includes wires for: park lamps, backup lamps, right turn, left turn, electric brake lead, battery and ground) with independent fused trailering circuits mated to a 7-way sealed connector, instrument panel jumper wiring harness for electric trailer brake controller and 1-way sealed connector for center high-mounted stop/brake lamp and (K47) high-capacity air cleaner 1 - Not available with (ZW9) pickup box delete or (VF7) rear bumper delete. 2 - Not available with (ZW9) pickup box delete.	A[1]	A[1]	A[1]	A[2]	A[2]
UY2		**Trailering wiring provisions**, for camper, fifth wheel and gooseneck trailer, includes additional 8-way wiring harness routed to front of pickup box and added 7-way sealed connector for the trailer harness 1 - Requires (Z82) heavy-duty trailering equipment.	A[1]	A[1]	A[1]	A[1]	A[1]
NP1		**Transfer case**, electronic shift with push-button controls 1 - Requires 4x4 models. Requires (MT1) heavy-duty 4-speed automatic transmission or (MW7) Allison 1000 6-speed automatic transmission.	--	--	A[1]	■[1]	■[1]
MT1		**Transmission**, 4-speed automatic, heavy-duty, electronically controlled with overdrive and tow/haul mode. Includes (KNP) external transmission oil cooler 1 - Requires (LQ4) Vortec 6.0L V8 SFI engine.	A[1]	A[1]	A[1]	■[1]	■[1]
MW7		**Transmission**, Allison 1000 6-speed automatic, electronically controlled with overdrive, electronic engine grade braking and tow/haul mode. Includes (KNP) external transmission oil cooler 1 - Requires (LBZ) Duramax 6.6L Turbo Diesel V8 engine or (L18) Vortec 8.1L V8 SFI engine.	A[1]	A[1]	A[1]	A[1]	A[1]

S = Standard Equipment A = Available – (dashes) = Not Available D = ADI Available
■ = Included in Equipment Group □ = Included in Equipment Group but upgradeable

No deletions allowed to Equipment Groups. Additional options may be added; check ordering information section for compatibility.

*Indicates availability of feature on multiple models. For example, it indicates feature availability on 2WD and 4WD Models or Rear wheel drive and All-wheel drive Models.

Codes listed in the shaded column titled Ref. Only RPO Code are for internal use only and should not be ordered.

Free Flow RPO Code	Ref. Only RPO Code	Description 1 - Equipment groups 1WT, 1LS, and 1LT available on C*25903, C*25753, C*25743, C*25953, and C*25943 Models. 2 - Equipment group 2LT and 3LT available on C*25753, C*25743, C*25953 and C*25943 Models	Reg., Ext. and Crew Cab			Ext. and Crew Cab	
			Work Truck 1WT[1]	LS 1LS[1]	LT1 1LT[1]	LT2 2LT[2]	LT3 3LT[2]
VB3		**Bumper**, rear chrome		■	■	■	■
K34		**Cruise control**		■	■	■	■
C49		**Defogger**, rear-window		■	■	■	■
UB0		**Audio system**, AM/FM stereo with CD player 1 - Upgradeable to (UC6) AM/FM stereo with 6-disc in-dash CD changer.		■	□[1]	□[1]	
	**D	**Seat trim**, Custom Cloth		■	■	■	
	PY2	**Wheels**, 4 - 16" x 6.5" (40.6 cm x 16.5 cm) 8-lug chrome-styled steel 1 - Upgradeable to (PY0) 4 - 16" x 6.5" (40.6 cm x 16.5 cm) 8-lug polished forged aluminum wheels.		■	□[1]	□[1]	
	AE7	**Seats**, front 40/20/40 split-bench		■	■		
	DK7	**Console**, overhead mini			■	■	■
AU3		**Door locks**, power			■	■	■
B30		**Floor covering**, color-keyed carpeting 1 - May be substituted with (BG9) rubberized vinyl floor covering. Not available with (**V) vinyl interior trim.			□[1]	■	■
AJ1		**Glass**, Solar-Ray deep-tinted			■	■	■
	DF5	**Mirror**, inside rearview auto-dimming			■	■	■
B85		**Moldings**, bodyside			■	■	■
	AU0	**Remote Keyless Entry**			■	■	■
	NP5	**Steering wheel**, leather-wrapped, Black			■	■	■
	A31	**Windows**, power			■	■	■
	DL8	**Mirrors**, outside heated power-adjustable, Black 1 - Upgradeable to (DL3) outside heated, power-adjustable, power-folding mirrors or (DPN) outside vertical camper mirrors.			□[1]	□[1]	
	UQ3	**Audio system feature**, speaker system			■		
CJ2		**Air conditioning**, dual-zone automatic climate control 1 - Must be substituted with (CJ3) dual-zone, manual air conditioning when (VYU) Snow Plow Prep Package is ordered.				□[1]	□[1]
	UK6	**Audio system controls**, rear				■	■
	UQ7	**Audio system feature**, Bose premium speaker system				■	■
	D07	**Console**, floor				■	■

Free Flow RPO Code	Ref. Only RPO Code	Description 1 - Equipment groups 1WT, 1LS, and 1LT available on C*25903, C*25753, C*25743, C*25953, and C*25943 Models. 2 - Equipment group 2LT and 3LT available on C*25753, C*25743, C*25953 and C*25943 Models	Reg., Ext. and Crew Cab			Ext. and Crew Cab	
			Work Truck 1WT[1]	LS 1LS[1]	LT1 1LT[1]	LT2 2LT[2]	LT3 3LT[2]
T96		**Fog lamps**, front				■	■
AG1		**Seat adjuster**, driver 6-way power				■	■
UK3		**Steering wheel controls**, mounted audio and Driver Information Center controls				■	■
NP1		**Transfer case**, electronic shift				■	■
MT1		**Transmission**, 4-speed automatic, heavy-duty				■	■
A95		**Seats**, front bucket				■	
UC6		**Audio system**, AM/FM stereo with 6-disc CD changer					■
DL3		**Mirrors**, outside heated power-adjustable, power-folding and driver-side auto-dimming, Black 1 - Upgradeable to (DPN) outside vertical camper mirrors. Includes curb-tilt when (UK3) steering-wheel mounted audio controls is ordered.					□[1]
	AG2	**Seat adjuster**, front passenger 10-way power					■
	AN3	**Seats**, front bucket					■
	**2	**Seat trim**, leather					■
PY0		**Wheels**, 4 - 16" x 6.5" (40.6 cm x 16.5 cm) 8-lug polished forged aluminum					■

S = Standard Equipment A = Available – (dashes) = Not Available D = ADI Available
■ = Included in Equipment Group □ = Included in Equipment Group but upgradeable

*Indicates availability of feature on multiple models. For example, it indicates feature availability on 2WD and 4WD Models or Rear wheel drive and All-wheel drive Models.

Codes listed in the shaded column titled Ref. Only RPO Code are for internal use only and should not be ordered.

Free Flow RPO Code	Ref. Only RPO Code	Description 1 - Equipment groups 1WT, 1LS, and 1LT available on C*25903, C*25753, C*25743, C*25953, and C*25943 Models. 2 - Equipment group 2LT and 3LT available on C*25753, C*25743, C*25953 and C*25943 Models	Reg., Ext. and Crew Cab			Ext. and Crew Cab	
			Work Truck 1WT[1]	LS 1LS[1]	LT1 1LT[1]	LT2 2LT[2]	LT3 3LT[2]
		Air bags, frontal, driver and right-front passenger 1 - Regular and Extended Cab models includes passenger-side deactivation switch. Never place a rear-facing infant restraint in the front seat of any vehicle equipped with an active frontal air bag. Always use safety belts and the correct child restraints for your child's age and size. Children are safer when properly secured in a rear seat. See the vehicle's Owner's Manual and child safety seat instructions for more safety information.	S[1]	S[1]	S[1]	S[1]	S[1]
CJ3		**Air conditioning**, dual-zone manual climate control with individual climate settings for driver and right-front passenger 1 - Required and only available when (VYU) Snow Plow Prep Package is ordered.	S	S	S	A[1]	A[1]
C42		**Air conditioning delete**, provides heater only 1 - Requires Regular Cab models.	A[1]	--	--	--	--
CJ2		**Air conditioning**, dual-zone automatic climate control with individual climate settings for driver and right-front passenger 1 - Requires Extended and Crew Cab models. Not available with (VYU) Snow Plow Prep Package. 2 - Must be substituted with (CJ3) dual-zone, manual air conditioning when (VYU) Snow Plow Prep Package is ordered.	--	--	A[1]	□[2]	□[2]
		Assist handle, front passenger 1 - Also includes rear outboard passenger assist handles on Extended and Crew Cab models.	S[1]	S[1]	S[1]	S[1]	S[1]
	UM7	**Audio system**, AM/FM stereo with seek-and-scan and digital clock	S	--	--	--	--
UB0		**Audio system**, AM/FM stereo with CD player, seek-and-scan, digital clock, auto-tone control, Radio Data System (RDS) and speed-compensated volume 1 - Upgradeable to (UC6) AM/FM stereo with 6-disc in-dash CD changer.	A	■	□[1]	□[1]	--
UC6		**Audio system**, AM/FM stereo with 6-disc CD changer, seek-and-scan, digital clock, auto-tone control, Radio Data System (RDS), speed-compensated volume and TheftLock	--	--	A	A	■
	UQ5	**Audio system feature**, 4-speaker system	S	S	--	--	--
	UQ3	**Audio system feature**, speaker system 1 - Includes 4 speakers on Regular Cab and 6 speakers on Extended and Crew Cab Models.	--	--	■[1]	--	--
	UQ7	**Audio system feature**, Bose premium speaker system with sub-woofer in center console 1 - Included and only available with (A95) front reclining bucket seats.	--	--	A[1]	■	■

Free Flow RPO Code	Ref. Only RPO Code	Description 1 - Equipment groups 1WT, 1LS, and 1LT available on C*25903, C*25753, C*25743, C*25953, and C*25943 Models. 2 - Equipment group 2LT and 3LT available on C*25753, C*25743, C*25953 and C*25943 Models	Reg., Ext. and Crew Cab			Ext. and Crew Cab	
			Work Truck 1WT[1]	LS 1LS[1]	LT1 1LT[1]	LT2 2LT[2]	LT3 3LT[2]
	UK6	**Audio system controls**, rear with 2 headphone jacks (headphones not included), power outlet and controls for volume, station selection and media 1 - Requires Crew Cab Models. Included and only available with (A95) front reclining bucket seats. 2 - Requires Crew Cab models.	--	--	A[1]	■[2]	■[2]
		Cigarette lighter, on instrument panel	S	S	S	S	S
		Coat hook, driver-side rear 1 - Also includes passenger-side coat hook on Extended and Crew Cab models.	S[1]	S[1]	S[1]	S[1]	S[1]
	D07	**Console**, floor with storage compartment and dual cup holders 1 - Included and only available with (A95) front reclining bucket seats.	--	--	A[1]	■	■
	DK7	**Console**, overhead mini with map lights 1 - Not available with (CF5) power sunroof.	--	--	■	■[1]	■[1]
	DK8	**Console**, overhead deluxe 1 - Included and only available with (CF5) power sunroof.	--	--	--	A[1]	A[1]
K34		**Cruise control**, electronic with set and resume speed	A	■	■	■	■
		Cup holders, front 1 - Also includes rear cupholders on Extended and Crew Cab models.	S[1]	S[1]	S[1]	S[1]	S[1]
C49		**Defogger**, rear-window electric 1 - Not available with (A28) sliding rear window or (C42) air conditioning delete. Available with Fleet and Government order types only. 2 - Not available with (A28) sliding rear window.	A[1]	■[2]	■[2]	■[2]	■[2]
AU3		**Door locks**, power 1 - Available with Fleet and Government order types only.	A[1]	A	■	■	■
		Driver Information Center that monitors numerous different systems depending on vehicle equipment	S	S	S	S	S
U42		**Entertainment system**, rear seat DVD player with LCD display and 2 sets of wireless headphones 1 - Requires Crew Cab models and (CJ2) dual-zone automatic air conditioning.	--	--	--	A[1]	A[1]
BG9		**Floor covering**, Black rubberized-vinyl 1 - Not available with (922) Medium Gray leather seating surfaces.	S	S	A[1]	--	--
B30		**Floor covering**, color-keyed carpeting with rubberized vinyl floor mats 1 - Available with Fleet and Government order types only. Not available with (**V) vinyl interior trim. 2 - Not available with (**V) vinyl interior trim. 3 - May be substituted with (BG9) rubberized vinyl floor covering. Not available with (**V) vinyl interior trim.	A[1]	A[2]	□[3]	■	■
		Instrumentation, analog with speedometer, odometer with trip odometer, fuel level, voltmeter, engine temperature, oil pressure and tachometer	S	S	S	S	S

Free Flow RPO Code	Ref. Only RPO Code	Description 1 - Equipment groups 1WT, 1LS, and 1LT available on C*25903, C*25753, C*25743, C*25953, and C*25943 Models. 2 - Equipment group 2LT and 3LT available on C*25753, C*25743, C*25953 and C*25943 Models	Reg., Ext. and Crew Cab			Ext. and Crew Cab	
			Work Truck 1WT[1]	LS 1LS[1]	LT1 1LT[1]	LT2 2LT[2]	LT3 3LT[2]
		Lighting, interior with dome and reading lights, backlit instrument panel switches and door handle-activated illuminated entry	S	S	S	S	S
		Mirror, inside rearview manual day/night	S	S	--	--	--
	DF5	**Mirror**, inside rearview auto-dimming with 8-point compass and outside temperature display	--	--	■	■	■
UE1		**OnStar**, 1-year of Safe and Sound plan. Includes Automatic Notification of Air Bag Deployment, Stolen Vehicle Location Assistance, Emergency Services, Roadside Assistance, Remote Door Unlock, OnStar Vehicle Diagnostics, Hands-Free Calling, AccidentAssist and Remote Horn & Lights 1 - OnStar services require vehicle electrical system (including battery), wireless service and GPS satellite signals to be available and operating for features to function properly. OnStar acts as a link to existing emergency service providers. OnStar Vehicle Diagnostics available on most 2004 MY and newer GM vehicles. Diagnostic capability varies by model. Visit onstar.com for system limitations and details. Requires (UK3) steering-wheel mounted audio controls. Not available with a ship-to of Puerto Rico or the Virgin Islands.	--	--	A[1]	A[1]	A[1]
PDB		**OnStar Plus Package**, includes (U2K) XM Satellite Radio, (UE1) OnStar and (UK3) steering-wheel mounted audio controls 1 - Package does not include (U2K) XM Satellite Radio when ordered outside the 48 contiguous United States. Not available with a ship-to of Puerto Rico or the Virgin Islands.	--	--	A[1]	A[1]	A[1]
R6Q		**OnStar Plus Package discount not desired** 1 - Required when content within option package is ordered and entire package is not desired.	--	--	A[1]	A[1]	A[1]
		Power outlets, 2 auxiliary instrument panel-mounted with covers, 12-volt	S	S	S	S	S
	AU0	**Remote Keyless Entry**, with 2 transmitters, panic button and content theft alarm	--	--	■	■	■
	**V	**Seat trim**, vinyl	S	A	--	--	--
	**C	**Seat trim**, cloth 1 - Not available with Crew Cab models.	A[1]	A[1]	--	--	--
	**D	**Seat trim**, Custom Cloth	A	■	■	■	--
	**2	**Seat trim**, leather 1 - Not available on Regular Cab models. Extended Cab includes front leather seating surfaces with rear vinyl bench. Crew Cab includes front and rear leather-appointed seating surfaces.	--	--	A[1]	A[1]	■[1]
	AE7	**Seats**, front 40/20/40 split-bench, 3-passenger, driver and front passenger manual reclining with outboard head restraints	S	A	--	--	--
	AE7	**Seats**, front 40/20/40 split-bench, 3-passenger, driver and front passenger manual reclining, center fold-down armrest with storage, adjustable outboard head restraints and storage pockets on Extended Cab models 1 - Requires (**D) Custom Cloth seat trim.	A[1]	■[1]	■	--	--

Free Flow RPO Code	Ref. Only RPO Code	Description 1 - Equipment groups 1WT, 1LS, and 1LT available on C*25903, C*25753, C*25743, C*25953, and C*25943 Models. 2 - Equipment group 2LT and 3LT available on C*25753, C*25743, C*25953 and C*25943 Models	Reg., Ext. and Crew Cab			Ext. and Crew Cab	
			Work Truck 1WT[1]	LS 1LS[1]	LT1 1LT[1]	LT2 2LT[2]	LT3 3LT[2]
A95		**Seats**, front bucket, includes (AG1) 6-way power driver seat adjuster, front passenger manual recline, adjustable outboard head restraints, inboard armrests and storage pockets 1 - Requires Extended or Crew Cab Models. - Requires Fleet and Government order types only. Includes (D07) floor console and (UQ7) Bose Premium speaker system. Also includes (UK6) rear audio controls on Crew Cab Models. On 4WD Models, also requires (NP1) electronic shift transfer case.	--	--	A[1]	■	--
	AN3	**Seats**, front bucket, includes 10-way power driver and front passenger seat adjusters, 2-way power lumbar control, heated seat cushions and seatbacks, 2-position driver memory, adjustable outboard head restraints, floor console, dual inboard armrests and storage pockets	--	--	--	--	■
		Seats, rear bench, 3-passenger, folding (includes child seat top tether anchor) 1 - Not available with Regular Cab models.	S[1]	S[1]	S[1]	S	S
AG1		**Seat adjuster**, driver 6-way power 1 - Included with (**2) Seat trim, leather on Extended and Crew Cab Models. Included with (A95) front reclining bucket seats. 2 - With (AN3) front full-feature bucket seats, includes 10-way power seat adjusters.	--	--	A[1]	■	■[2]
	AG2	**Seat adjuster**, front passenger 10-way power 1 - Included and only available with (AN3) front full-feature bucket seats.	--	--	--	--	■[1]
DNH		**Regular production accessory**, Underseat storage, rear, lockable 1 - Requires Extended Cab models. For additional GM Accessory Offerings and Installation, please contact your local GM Accessory Distributor Installer (ADI).	A/D[1]	A/D[1]	A/D[1]	A/D[1]	A/D[1]
		Steering column, Tilt-Wheel, adjustable with brake/transmission shift interlock	S	S	S	S	S
		Steering wheel, includes theft-deterrent locking feature	S	S	--	--	--
	NP5	**Steering wheel**, leather-wrapped, Black with theft-deterrent locking feature	--	--	■	■	■
UK3		**Steering wheel controls**, mounted audio and Driver Information Center controls which provides access to enhanced Driver Information Center features and information	--	--	A	■	■
CF5		**Sunroof**, power, tilt-sliding with express-open and wind deflector, includes (UG1) Universal Home Remote 1 - Requires (CJ2) dual-zone automatic air conditioning. Not available with (VYU) Snow Plow Prep Package.	--	--	--	A[1]	A[1]
		Theft-deterrent system, PASSlock II	S	S	S	S	S
		Tools, mechanical jack and wheel wrench located in back of cab	S	S	S	S	S
	UG1	**Universal Home Remote** 1 - Included and only available with (CF5) power sunroof.	--	--	--	A[1]	A[1]

2007 Chevrolet Truck Silverado 2500HD Classic — INTERIOR

Free Flow RPO Code	Ref. Only RPO Code	Description	Reg., Ext. and Crew Cab			Ext. and Crew Cab	
		1 - Equipment groups 1WT, 1LS, and 1LT available on C*25903, C*25753, C*25743, C*25953, and C*25943 Models. 2 - Equipment group 2LT and 3LT available on C*25753, C*25743, C*25953 and C*25943 Models	Work Truck 1WT[1]	LS 1LS[1]	LT1 1LT[1]	LT2 2LT[2]	LT3 3LT[2]
		Visors, driver and front passenger, padded with cloth trim, extenders, pocket on driver-side and vanity mirror on passenger-side, Shale-colored	S	S	S	S	S
		Warning tones, headlamp on, key-in-ignition, driver and passenger buckle up reminder and turn signal on	S	S	S	S	S
	A31	**Windows**, power with driver and front passenger Express-Down	--	--	■	■	■
A28		**Window**, manual rear-sliding, deep-tinted 1 - Requires (AJ1) Solar-Ray deep-tinted glass. Deletes or not available with (C49) rear-window defogger when ordered. Not available with (ZW9) pickup box delete.	A[1]	A[1]	A[1]	A[1]	A[1]
U2K		**XM Satellite Radio**. With a wide variety of programming, XM has something to excite any driver. Whether you want to be entertained or informed, to laugh, think, or sing, XM has the perfect channel for you - coast-to-coast, and in digital-quality sound. 3 trial months - no obligation 1 - Available in the 48 contiguous United States. Required $12.95 monthly subscription sold separately. All fees and programming subject to change. Subscription subject to customer agreement. For more information, visit gm.xmradio.com.	--	--	A[1]	A[1]	A[1]

2007 Chevrolet Truck Silverado 2500HD Classic — EXTERIOR

S = Standard Equipment A = Available -- (dashes) = Not Available D = ADI Available

■ = Included in Equipment Group □ = Included in Equipment Group but upgradeable

*Indicates availability of feature on multiple models. For example, it indicates feature availability on 2WD and 4WD Models or Rear wheel drive and All-wheel drive Models.

Codes listed in the shaded column titled Ref. Only RPO Code are for internal use only and should not be ordered.

Free Flow RPO Code	Ref. Only RPO Code	Description	Reg., Ext. and Crew Cab			Ext. and Crew Cab	
		1 - Equipment groups 1WT, 1LS, and 1LT available on C*25903, C*25753, C*25743, C*25953, and C*25943 Models. 2 - Equipment group 2LT and 3LT available on C*25753, C*25743, C*25953 and C*25943 Models	Work Truck 1WT[1]	LS 1LS[1]	LT1 1LT[1]	LT2 2LT[2]	LT3 3LT[2]
		Air dam, Gray	S	S	S	S	S
	VG3	**Bumper**, front chrome with Gray lower	S	S	S	S	S
	V43	**Bumper**, rear painted, step-style with pad 1 - Not available with (ZW9) pickup box delete.	S[1]	--	--	--	--
VB3		**Bumper**, rear chrome, step-style with pad 1 - Not available with (ZW9) pickup box delete.	A[1]	■[1]	■[1]	■[1]	■
VF7		**Bumper**, rear delete (vehicles registered in certain states must have a rear bumper to be operated on their roads, consult local laws) 1 - Not available with (Z82) heavy-duty trailering equipment or (ZW9) pickup box delete.	A[1]	A[1]	A[1]	--	--
		Daytime Running Lamps, with automatic exterior lamp control	S	S	S	S	S
T96		**Fog lamps**, front, halogen 1 - With 2WD models requires (V76) front frame-mounted recovery hooks.	--	--	A[1]	■	■
		Glass, Solar-Ray light-tinted, all windows	S	S	--	--	--
AJ1		**Glass**, Solar-Ray deep-tinted (all windows except light-tinted glass on windshield) 1 - With Extended Cab models, includes rear window and rear quarter windows. With (C49) rear-window defogger, includes light-tinted rear.	A[1]	A[1]	■[1]	■[1]	■[1]
	TR3	**Grille**, color-keyed surround with chrome accent bar	S	S	S	S	S
		Headlamps, dual halogen composite with automatic exterior lamp control and flash-to-pass feature	S	S	S	S	S
U01		**Lamps**, Amber roof marker 1 - Not available with (YF5) California state emissions requirements.	A[1]	A[1]	A[1]	A[1]	A[1]
		Lamps, dual cargo area lamps	S	S	S	S	S
	DE2	**Mirrors**, outside manual, Black, manual-folding	S	S	--	--	--
DF2		**Mirrors**, outside high-visibility camper-style, Black, manual-folding and extension, includes a dual-segment mirror on the driver-side that provides enhanced wide angle capacity (not recommended for bodies or trailers wider than 86" (218.4 cm))	A	A	--	--	--
	DL8	**Mirrors**, outside heated power-adjustable, Black, manual-folding 1 - Upgradeable to (DL3) outside heated, power-adjustable, power-folding mirrors or (DPN) outside vertical camper mirrors.	--	--	□[1]	□[1]	--

Free Flow RPO Code	Ref. Only RPO Code	Description	Reg., Ext. and Crew Cab			Ext. and Crew Cab	
		1 - Equipment groups 1WT, 1LS, and 1LT available on C*25903, C*25753, C*25743, C*25953, and C*25943 Models. 2 - Equipment group 2LT and 3LT available on C*25753, C*25743, C*25953 and C*25943 Models	Work Truck 1WT[1]	LS 1LS[1]	LT1 1LT[1]	LT2 2LT[2]	LT3 3LT[2]
DL3		**Mirrors**, outside heated power-adjustable, power-folding and driver-side auto-dimming, Black with integrated turn signal indicators 1 - Curb-tilt feature requires (UK3) steering-wheel mounted audio controls. 2 - Upgradeable to (DPN) outside vertical camper mirrors. Includes curb-tilt when (UK3) steering-wheel mounted audio controls is ordered.	--	--	A[1]	A[1]	□[2]
DPN		**Mirrors**, outside heated power-adjustable vertical camper manual-folding and extension, integrated turn signal indicators and lower convex spotter glass (convex glass is not heated)	--	--	A	A	A
B85		**Moldings**, bodyside 1 - Moldings are Black and not available with (ZW9) pickup box delete. 2 - Moldings are color-keyed and not available with (ZW9) pickup box delete. Refer to Color and Trim Chart for compatibility.	--	A[1]	■[2]	■[2]	■[2]
	ZY1	**Paint**, solid	S	S	S	S	S
	E63	**Pickup box**, Fleetside	S	S	S	S	S
ZW9		**Pickup box**, delete 1 - Requires C*259*3 models.	A[1]	A[1]	A[1]	A[1]	A[1]
	V76	**Recovery hooks**, front, frame-mounted	S	S	S	S	S
BVE		**Regular production accessory**, Assist steps, chrome plated tubular, stainless steel 1 - Not available with (ZW9) pickup box delete. For additional GM Accessory Offerings and Installation, please contact your local GM Accessory Distributor Installer (ADI).	A/D[1]	A/D[1]	A/D[1]	A/D[1]	A/D[1]
BVS		**Regular production accessory**, Assist steps, Black coated tubular, stainless steel 1 - Not available with (ZW9) pickup box delete. For additional GM Accessory Offerings and Installation, please contact your local GM Accessory Distributor Installer (ADI).	A/D[1]	A/D[1]	A/D[1]	A/D[1]	A/D[1]
PPB		**Regular production accessory**, Pickup bed extender, brushed aluminum 1 - Not available with (ZW9) pickup box delete. For additional GM Accessory Offerings and Installation, please contact your local GM Accessory Distributor Installer (ADI).	A/D[1]	A/D[1]	A/D[1]	A/D[1]	A/D[1]
PUB		**Regular production accessory**, Pickup bed protectors, Top side rails, Black molded 1 - Not available with (ZW9) pickup box delete, (E9S) Regular production accessory, soft, Black tonneau cover, or (EN6) Regular production accessory, hard, Black tonneau cover. For additional GM Accessory Offerings and Installation, please contact your local GM Accessory Distributor Installer (ADI).	A/D[1]	A/D[1]	A/D[1]	A/D[1]	A/D[1]
E9S		**Regular production accessory**, Tonneau cover, Black, soft 1 - Not available with (PUB) Regular production accessory, top side rail, Black-molded, pickup bed protectors, or (ZW9) pickup box delete. For additional GM Accessory Offerings and Installation, please contact your local GM Accessory Distributor Installer (ADI).	A/D[1]	A/D[1]	A/D[1]	A/D[1]	A/D[1]

Free Flow RPO Code	Ref. Only RPO Code	Description	Reg., Ext. and Crew Cab			Ext. and Crew Cab	
		1 - Equipment groups 1WT, 1LS, and 1LT available on C*25903, C*25753, C*25743, C*25953, and C*25943 Models. 2 - Equipment group 2LT and 3LT available on C*25753, C*25743, C*25953 and C*25943 Models	Work Truck 1WT[1]	LS 1LS[1]	LT1 1LT[1]	LT2 2LT[2]	LT3 3LT[2]
EN6		**Regular production accessory**, Tonneau cover, Black, hard, folding, lockable 1 - Not available with (PUB) Regular production accessory, top side rail, Black-molded, pickup bed protectors, or (ZW9) pickup box delete. For additional GM Accessory Offerings and Installation, please contact your local GM Accessory Distributor Installer (ADI).	A/D[1]	A/D[1]	A/D[1]	A/D[1]	A/D[1]
		Tire carrier, outside spare, winch-type mounted under frame at rear	S	S	S	S	S
SAF		**Spare tire lock**, keyed cylinder lock that utilizes same key as ignition and door 1 - Not available with (ZW9) pickup box delete.	A[1]	A[1]	A[1]	A[1]	A[1]
	QIZ	**Tires**, LT245/75R16E all-season, blackwall 1 - Includes 5 tires with (E63) Fleetside pickup box. Includes 4 tires with (ZW9) pickup box delete.	S[1]	S[1]	S[1]	S[1]	S[1]
QIW		**Tires**, LT245/75R16E on-/off-road, blackwall 1 - Includes 4 tires and (ZHH) LT245/75R16E all-season blackwall spare tire with (E63) Fleetside pickup box. Includes 4 tires with (ZW9) pickup box delete.	A[1]	A[1]	A[1]	A[1]	A[1]
ZHH		**Tire**, spare LT245/75R16E all-season, blackwall, located at rear underbody of vehicle 1 - Requires C*259*3 models and (ZW9) pickup box delete.	A[1]	A[1]	A[1]	A[1]	A[1]
		Wheels, 4 - 16" x 6.5" (40.6 cm x 16.5 cm) 8-lug painted steel	S	--	--	--	--
	PY2	**Wheels**, 4 - 16" x 6.5" (40.6 cm x 16.5 cm) 8-lug chrome-styled steel, includes chrome center caps and steel spare 1 - Upgradeable to (PY0) 4 - 16" x 6.5" (40.6 cm x 16.5 cm) 8-lug polished forged aluminum wheels.	--	■	□[1]	□[1]	--
PY0		**Wheels**, 4 - 16" x 6.5" (40.6 cm x 16.5 cm) 8-lug polished forged aluminum, includes chrome center caps and steel spare	--	--	A	A	■
	B71	**Wheel flares**, front and rear 1 - Refer to Color and Trim chart for compatibility. Front only when (ZW9) pickup box delete is ordered.	S[1]	S[1]	S[1]	S[1]	S[1]
		Wipers, front intermittent wet-arm with pulse washers	S	S	S	S	S

S = Standard Equipment A = Available – (dashes) = Not Available D = ADI Available
■ = Included in Equipment Group □ = Included in Equipment Group but upgradeable

*Indicates availability of feature on multiple models. For example, it indicates feature availability on 2WD and 4WD Models or Rear wheel drive and All-wheel drive Models.

Codes listed in the shaded column titled Ref. Only RPO Code are for internal use only and should not be ordered.

Free Flow RPO Code	Ref. Only RPO Code	Description 1 - Equipment groups 1WT, 1LS, and 1LT available on C*25903, C*25753, C*25743, C*25953, and C*25943 Models. 2 - Equipment group 2LT and 3LT available on C*25753, C*25743, C*25953 and C*25943 Models	Reg., Ext. and Crew Cab			Ext. and Crew Cab	
			Work Truck 1WT[1]	LS 1LS[1]	LT1 1LT[1]	LT2 2LT[2]	LT3 3LT[2]
K47		**Air cleaner**, high-capacity 1 - Included with (LBZ) Duramax 6.6L Turbo Diesel V8 engine, (Z82) heavy-duty trailering equipment or (VYU) Snow Plow Prep Package.	A[1]	A[1]	A[1]	A[1]	A[1]
KL5		**Alternative fuel conversions**, conversion-ready engine, includes internal modifications for operation with natural or propane gas 1 - Requires (LQ4) Vortec 6.0L V8 SFI engine and (MT1) heavy-duty 4-speed automatic transmission.	A[1]	A[1]	A[1]	A[1]	A[1]
	K68	**Alternator**, 105 amps 1 - Not available with (VYU) Snow Plow Prep Package.	S[1]	S[1]	S[1]	S[1]	S[1]
	KG3	**Alternator**, 145 amps 1 - Included and only available with (VYU) Snow Plow Prep Package or (LBZ) Duramax 6.6L Turbo Diesel V8 engine.	A[1]	A[1]	A[1]	A[1]	A[1]
		Battery, heavy-duty 600 cold-cranking amps, maintenance-free with rundown protection and retained accessory power 1 - Not standard with (LBZ) Duramax 6.6L Turbo Diesel V8 engine.	S[1]	S[1]	S[1]	S[1]	S[1]
TP2		**Battery**, auxiliary heavy-duty 600 cold-cranking amps, maintenance-free 1 - Not available with (LBZ) Duramax 6.6L Turbo Diesel V8 engine.	A[1]	A[1]	A[1]	A[1]	A[1]
	TQ3	**Battery**, heavy-duty dual 770 cold-cranking amps, maintenance-free with rundown protection and retained accessory power 1 - Included and only available with (LBZ) Duramax 6.6L Turbo Diesel V8 engine.	A[1]	A[1]	A[1]	A[1]	A[1]
		Brakes, 4-wheel antilock, 4-wheel disc	S	S	S	S	S
	KC4	**Cooling**, external engine oil cooler, heavy-duty air-to-oil, integral to driver-side of radiator tank	S	S	S	S	S
	KNP	**Cooling**, auxiliary external transmission oil cooler, heavy-duty air-to-oil 1 - Included and only available with (MT1) heavy-duty 4-speed automatic transmission or (MW7) Allison 1000 6-speed automatic transmission.	A[1]	A[1]	A[1]	A[1]	A[1]
		Cooling, internal transmission oil cooler, water-to-oil, integral to driver-side of radiator tank 1 - Included and only available with (MT1) heavy-duty 4-speed automatic transmission or (MW7) Allison 1000 6-speed automatic transmission.	A[1]	A[1]	A[1]	A[1]	A[1]
G80		**Differential**, heavy-duty automatic locking rear	A	A	A	A	A
FE9		**Emissions**, Federal requirements	A	A	A	A	A

Free Flow RPO Code	Ref. Only RPO Code	Description 1 - Equipment groups 1WT, 1LS, and 1LT available on C*25903, C*25753, C*25743, C*25953, and C*25943 Models. 2 - Equipment group 2LT and 3LT available on C*25753, C*25743, C*25953 and C*25943 Models	Reg., Ext. and Crew Cab			Ext. and Crew Cab	
			Work Truck 1WT[1]	LS 1LS[1]	LT1 1LT[1]	LT2 2LT[2]	LT3 3LT[2]
YF5		**Emissions**, California state requirements	A	A	A	A	A
NE1		**Emissions**, Maine, Massachusetts, New York or Vermont state requirements	A	A	A	A	A
NB8		**Emissions override**, California, Massachusetts or New York (for vehicles ordered by dealers in states of California, Massachusetts or New York with Federal emissions) 1 - Requires (FE9) Federal emissions requirements.	A[1]	A[1]	A[1]	A[1]	A[1]
NC7		**Emissions override**, Federal (for vehicles ordered by dealers in Federal emission states with California; New York, Vermont, Massachusetts or Maine emissions; may also be used by dealers in states of California, New York, Vermont, Massachusetts or Maine to order different state-specific emissions) 1 - Requires (YF5) California state emissions requirements or (NE1) New York, Vermont, Massachusetts or Maine state emissions requirements.	A[1]	A[1]	A[1]	A[1]	A[1]
K05		**Engine block heater** 1 - Included with (LBZ) Duramax 6.6L Turbo Diesel V8 engine.	A[1]	A[1]	A[1]	A[1]	A[1]
	LQ4	**Engine**, Vortec 6.0L V8 SFI (300 hp [223.8 kW] @ 4400 rpm, 360 lb-ft of torque [486.6 N-m] @ 4000 rpm)	S	S	S	S	S
L18		**Engine**, Vortec 8.1L V8 SFI (330 hp [245.8 kW] @ 4200 rpm, 450 lb-ft of torque [607.5 N-m] @ 3200 rpm)	A	A	A	A	A
LBZ		**Engine**, Duramax 6.6L Turbo Diesel V8 (360 hp [268.0 kW] @ 3200 rpm, 650 lb-ft of torque [881.0 N-m] @ 1600 rpm) 1 - Requires (MW7) Allison 1000 6-speed automatic transmission. Includes (TQ3) heavy-duty dual, 770 cold-cranking-amp battery, (KG3) 145-amp alternator, (K47) high-capacity air cleaner and (K05) engine block heater.	A[1]	A[1]	A[1]	A[1]	A[1]
V10		**Covers**, radiator grille and front bumper openings for diesel engines in winter weather 1 - Requires (LBZ) Duramax 6.6L Turbo Diesel V8 engine and is required on orders with "Ship To" locations within the following states: Maine, New Hampshire, Vermont, Minnesota, North Dakota, South Dakota, Montana, Alaska, Idaho, Wisconsin, Wyoming, Michigan, Colorado and New York.	A[1]	A[1]	A[1]	A[1]	A[1]
		Exhaust, aluminized stainless-steel muffler and tailpipe	S	S	S	S	S
		Frame, hydroformed ladder-type	S	S	S	S	S
	C6W	**GVWR**, 9200 lbs. (4173 kg) 1 - Must specify on CC25903, CK25753, and C*25743 models.	S[1]	S[1]	S[1]	S[1]	S[1]
PDN		**Heavy-Duty Power Package**, includes (LBZ) Duramax 6.6L Turbo Diesel engine, (MW7) Allison 1000 6-speed automatic transmission and (G80) heavy-duty rear locking differential	A	A	A	A	A
R6Y		**Heavy-Duty Power Package discount not desired**	A	A	A	A	A
GT4		**Rear axle**, 3.73 ratio 1 - Refer to Engine/Axle Chart for availability.	A[1]	A[1]	A[1]	A[1]	A[1]

Free Flow RPO Code	Ref. Only RPO Code	Description 1 - Equipment groups 1WT, 1LS, and 1LT available on C*25903, C*25753, C*25743, C*25953, and C*25943 Models. 2 - Equipment group 2LT and 3LT available on C*25753, C*25743, C*25953 and C*25943 Models	Reg., Ext. and Crew Cab			Ext. and Crew Cab	
			Work Truck 1WT[1]	LS 1LS[1]	LT1 1LT[1]	LT2 2LT[2]	LT3 3LT[2]
	GT5	**Rear axle**, 4.10 ratio 1 - Refer to Engine/Axle Chart for availability.	S[1]	S[1]	S[1]	S[1]	S[1]
NZZ		**Skid Plate Package**, includes aluminum front underbody shield starting behind front bumper and running to first cross-member, protecting front underbody, oil pan, differential case and transfer case, frame-mounted shields 1 - Requires 4x4 models. Included with (VYU) Snow Plow Prep Package.	A[1]	A[1]	A[1]	A[1]	A[1]
VYU		**Snow Plow Prep Package**, includes 10-amp power for backup and roof emergency light, (KG3) 145-amp alternator, high-flow front bumper, forward lamp wiring harness, 1.65" (42 mm) access hole with grommet in front of dash panel, roof beacon lamp provisions with switch on the instrument panel, instrument panel jumper wiring harness for electric trailer brake controller, (K47) high-capacity air cleaner and (NZZ) Skid Plate Package 1 - Requires 4x4 models and not available with (CJ2) dual-zone automatic air conditioning. With models CK25953 not available with (LBZ) Duramax 6.6L Turbo Diesel V8 engine. With models CK25*43 requires (LQ4) Vortec 6.0L V8 SFI engine.	A[1]	A[1]	A[1]	A[1]	A[1]
		Steering, power	S	S	S	S	S
		Suspension, front independent with torsion bar and stabilizer bar	S	S	S	S	S
		Suspension, rear 2-stage multi-leaf springs, semi-elliptic	S	S	S	S	S
	Z85	**Suspension Package**, Handling/Trailering, heavy-duty, includes 36 mm piston monotube shocks	S	S	S	S	S
Z82		**Trailering equipment**, heavy-duty, includes trailering hitch platform, 7-wire harness (harness includes wires for: park lamps, backup lamps, right turn, left turn, electric brake lead, battery and ground) with independent fused trailering circuits mated to a 7-way sealed connector, instrument panel jumper wiring harness for electric trailer brake controller and 1-way sealed connector for center high-mounted stop/brake lamp and (K47) high-capacity air cleaner 1 - Not available with (ZW9) pickup box delete or (VF7) rear bumper delete. 2 - Not available with (ZW9) pickup box delete.	A[1]	A[1]	A[1]	A[2]	A[2]
UY2		**Trailering wiring provisions**, for camper, fifth wheel and gooseneck trailer, includes additional 8-way wiring harness routed to front of pickup box and added 7-way sealed connector for the trailer harness 1 - Requires (Z82) heavy-duty trailering equipment.	A[1]	A[1]	A[1]	A[1]	A[1]
	NP2	**Transfer case**, floor-mounted shifter 1 - Requires 4x4 models and (AE7) front 40/20/40 split-bench seat.	S[1]	S[1]	S[1]	--	--
NP1		**Transfer case**, electronic shift with push-button controls 1 - Requires 4x4 models. Requires (MT1) heavy-duty 4-speed automatic transmission or (MW7) Allison 1000 6-speed automatic transmission.	--	--	A[1]	■[1]	■[1]

Free Flow RPO Code	Ref. Only RPO Code	Description 1 - Equipment groups 1WT, 1LS, and 1LT available on C*25903, C*25753, C*25743, C*25953, and C*25943 Models. 2 - Equipment group 2LT and 3LT available on C*25753, C*25743, C*25953 and C*25943 Models	Reg., Ext. and Crew Cab			Ext. and Crew Cab	
			Work Truck 1WT[1]	LS 1LS[1]	LT1 1LT[1]	LT2 2LT[2]	LT3 3LT[2]
	MW3	**Transmission**, 5-speed manual with overdrive 1 - Requires (LQ4) Vortec 6.0L V8 SFI engine and (AE7) front 40/20/40 split-bench seat.	S[1]	S[1]	S[1]	--	--
MT1		**Transmission**, 4-speed automatic, heavy-duty, electronically controlled with overdrive and tow/haul mode. Includes (KNP) external transmission oil cooler 1 - Requires (LQ4) Vortec 6.0L V8 SFI engine.	A[1]	A[1]	A[1]	■[1]	■[1]
MW7		**Transmission**, Allison 1000 6-speed automatic, electronically controlled with overdrive, electronic engine grade braking and tow/haul mode. Includes (KNP) external transmission oil cooler 1 - Requires (LBZ) Duramax 6.6L Turbo Diesel V8 engine or (L18) Vortec 8.1L V8 SFI engine.	A[1]	A[1]	A[1]	A[1]	A[1]

2007 Chevrolet Truck Silverado 2500HD ENGINE/AXLE
Classic

S = Standard Equipment A = Available -- (dashes) = Not Available
■ = Included in Equipment Group □ = Included in Equipment Group but upgradeable

*Indicates availability of feature on multiple models. For example, it indicates feature availability on 2WD and 4WD Models or Rear wheel drive and All-wheel drive Models.

		Transmissions			Axles		GVWR lbs. (kg)
Model	Engine	MW3 5-Speed Manual with OD[1]	MT1 4-Speed Automatic HD	MW7 Allison 1000 6-Speed Automatic with OD	GT4 3.73	GT5 4.10	C6W 9200 (4173)
CC25**3	LQ4 Vortec 6.0L V8 SFI	S	A	--	--	S	S
	L18 Vortec 8.1L V8 SFI	--	--	A	A[2]	S	S
	LBZ Duramax 6.6L Turbo Diesel V8	--	--	A	A	--	S
CK25**3	LQ4 Vortec 6.0L V8 SFI	S	A	--	--	S	S
	L18 Vortec 8.1L V8 SFI	--	--	A	A[2]	S	S
	LBZ Duramax 6.6L Turbo Diesel V8	--	--	A	A	--	S

1 - Not available with (**2) Leather seat trim. - Requires (AE7) front 40/20/40 split-bench seats.
2 - Not available on C*25903 with (ZW9) Pickup bed delete.

2007 Chevrolet Truck Silverado 2500HD COLOR AND TRIM - SOLID PAINT ZY1
Classic

S = Standard Equipment A = Available -- (dashes) = Not Available
■ = Included in Equipment Group □ = Included in Equipment Group but upgradeable

*Indicates availability of feature on multiple models. For example, it indicates feature availability on 2WD and 4WD Models or Rear wheel drive and All-wheel drive Models.

				Interior		
Decor Level	Seat Type	Seat Code	Seat Trim	Tan	Dark Charcoal	Medium Gray
Work Truck / LS	Front 40/20/40 split-bench without fold-down armrest	AE7	Vinyl	52V	69V	--
Work Truck / LS	Front 40/20/40 split-bench without fold-down armrest	AE7	Cloth[4]	52C	69C	--
Work Truck / LS / LT1	Front 40/20/40 reclining split-bench with fold-down armrest	AE7	Custom Cloth	52D	69D	--
LT1	Front 40/20/40 reclining split-bench with fold-down armrest	AE7	Custom Leather[2]	522	692	922
LT1/ LT2	Front power buckets with manual recline	A95[1]	Custom Cloth	52D	69D	--
LT1/ LT2	Front power buckets with manual recline	A95[1]	Custom Leather[2]	522	692	922
LT3	Front power reclining full-feature buckets	AN3	Custom Leather[2]	522	692	922

			Interior			
Exterior Solid Paint	Color Code	Touch Up Paint Number	Tan	Dark Charcoal	Medium Gray	Wheel Flare and/or Bodyside Molding Color LT
Sandstone Metallic[4]	15U	WA-929L	A	A	A	Sandstone Metallic
Graystone Metallic	16U	WA-213M	A	A	A	Graystone Metallic
Dark Blue Metallic	25U	WA-722J	A	A	A	Black
Black	41U	WA-8555	A	A	A	Black
Blue Granite Metallic	46U	WA-928L	A	A	A	Black
Dark Green Metallic[4]	47U	WA-9539	A	A	A	Dark Green Metallic
Summit White	50U	WA-8624	A	A	A	Summit White
Silver Birch Metallic	59U	WA-926L	--	A	A	Silver Birch Metallic
Sport Red Metallic[3]	63U	WA-817K	A	A	A	Black
Victory Red	74U	WA-9260	A	A	A	Black

Above interior trim combinations are the only combinations allowed.

Note: Wheel flares are Black on Work Truck and LS models.

1 - LT1 requires Fleet or Government order types

2 - Not available with Regular Cab Models or Manual Transmissions. - Leather seating surfaces on Extended Cab and Leather appointed, front and rear on Crew Cab Models.

3 - Not available with Work Truck or LS Models.

4 - Not available with Crew Cab Models.

2007 Chevrolet Truck Silverado 2500HD COLOR AND TRIM - SEO SOLID PAINT
Classic

S = Standard Equipment A = Available -- (dashes) = Not Available

■ = Included in Equipment Group □ = Included in Equipment Group but upgradeable

*Indicates availability of feature on multiple models. For example, it indicates feature availability on 2WD and 4WD Models or Rear wheel drive and All-wheel drive Models.

Decor Level	Seat Type	Seat Code	Seat Trim	Interior		
				Tan	Dark Charcoal	Medium Gray
Work Truck / LS	Front 40/20/40 split-bench without fold-down armrest	AE7	Vinyl	52V	69V	--
Work Truck / LS	Front 40/20/40 split-bench without fold-down armrest	AE7	Cloth[1]	52C	69C	--
Work Truck / LS / LT1	Front 40/20/40 reclining split-bench with fold-down armrest	AE7	Custom Cloth	52D	69D	--
LT1	Front 40/20/40 reclining split-bench with fold-down armrest	AE7	Custom Leather[3]	522	692	922
LT1/ LT2	Front power buckets with manual recline	A95[2]	Custom Cloth	52D	69D	--
LT1/ LT2	Front power buckets with manual recline	A95[2]	Custom Leather[3]	522	692	922
LT3	Front power reclining full-feature buckets	AN3	Custom Leather[3]	522	692	922

Exterior Solid Paint	Color Code	Touch Up Paint Number	Interior		
			Tan	Dark Charcoal	Medium Gray
Yellow	none	WA-5248	A	A	A
Blue Metallic	none	WA-5405	A	A	A
Yellow	none	WA-5445	A	A	A
Yellow	none	WA-5456	A	A	A
Blue	none	WA-5663	A	A	A
Green - Low Gloss	none	WA-6237	A	A	A
Tan - Low Gloss	none	WA-6238	A	A	A
Blue	none	WA-7154	A	A	A
Blue Metallic	none	WA-7159	A	A	A
Gray Metallic	none	WA-7840	A	A	A
Green	none	WA-7941	A	A	A
Green, Woodland	9V5	WA-9015	A	A	A
Doeskin Tan	9V9	WA-9403	A	A	A
Orange	none	WA-9408	A	A	A
Yellow	none	WA-9414	A	A	A

Tangier Orange	9W4	WA-9417	A	A	A
Orange	none	WA-9419	A	A	A
Indigo Blue	none	WA-9792	A	A	A
NEW! Brown	none	WA-195E	A	A	A
Light Autumnwood Metallic	none	WA-228A	A	A	A
Wheatland Yellow	9W3	WA-253A	A	A	A
Dark Toreador Red	none	WA-334D	A	A	A
Pewter	none	WA-382E	A	A	A
Blue	none	WA-769H	A	A	A
Orange	none	WA-770H	A	A	A
Green	none	WA-5758	A	A	A
NEW! Arrival Blue	none	WA-815K	A	A	A
NEW! Blue	none	WA-454N	A	A	A

All wheel flares, mirrors, body side moldings, door handles, bumpers and fascia will be Black.

1 - Not available with Crew Cab Models.

2 - LT1 requires Fleet or Government order types.

3 - Not available with Regular Cab Models or Manual Transmissions. - Leather seating surfaces on Extended Cab and Leather appointed, front and rear on Crew Cab Models.

S = Standard Equipment A = Available – (dashes) = Not Available D = ADI Available

■ = Included in Equipment Group □ = Included in Equipment Group but upgradeable

*Indicates availability of feature on multiple models. For example, it indicates feature availability on 2WD and 4WD Models or Rear wheel drive and All-wheel drive Models.

Codes listed in the shaded column titled Ref. Only RPO Code are for internal use only and should not be ordered.

Free Flow RPO Code	Ref. Only RPO Code	Description	Reg., Ext. and Crew Cab			Ext. and Crew Cab	
		1 - Equipment groups 1WT, 1LS, and 1LT available on C*25903, C*25753, C*25743, C*25953, and C*25943 Models. 2 - Equipment group 2LT and 3LT available on C*25753, C*25743, C*25953 and C*25943 Models	Work Truck 1WT[1]	LS 1LS[1]	LT1 1LT[1]	LT2 2LT[2]	LT3 3LT[2]
		Interior					
6C7		**Console, roof with reading lamps (MSRP = $55.00)** Provides a short interior roof console with spot reading lamps and up-level headliner.	A	A	--	--	--
5B5		**Power windows and mirrors (MSRP = $738.00) with Regular Cab and Extended Cab Models (MSRP = $815.00) with Crew Cab Models** Provides power driver and passenger windows on a base trim level. Includes SEO (5M1) LH and RH outside power adjustable, manual folding, non-heated, non-extendable mirrors and up level door panels. The mirror head is the same size and configuration as the base power mirror on LT Décor. **1 - Requires RPO (AU3) power programmable door locks. Power mirrors can be upgraded to SEO (6P3) remote control, power-extendable camper mirrors.**	A[1]	A[1]	--	--	--
8Q3		**Rear seat delete (MSRP = -$375.00 Credit)** Provides deletion of the rear seat on Extended Cab Pickup and Chassis Cabs. Exposed areas will remain untrimmed. **1 - Available on models C*25*53. Requires RPO (AE7) front 40/20/40 split-bench seats and available with RPO (9U3) front individual cloth seats or (9S1) front individual vinyl seats.**	A[1]	A[1]	--	--	--
9U4		**Remote keyless entry (MSRP = $170.00)** Provides remote keyless entry on LS Décor or Work Truck Décor pick-up trucks. Includes two transmitters, and deletes the lock cylinder on the right hand door. **1 - Requires RPO (AU3) power door locks and SEO (5B5) power windows and mirrors.**	A[1]	A[1]	--	--	--

Free Flow RPO Code	Ref. Only RPO Code	Description 1 - Equipment groups 1WT, 1LS, and 1LT available on C*25903, C*25753, C*25743, C*25953, and C*25943 Models. 2 - Equipment group 2LT and 3LT available on C*25753, C*25743, C*25953 and C*25943 Models	Reg., Ext. and Crew Cab			Ext. and Crew Cab	
			Work Truck 1WT[1]	LS 1LS[1]	LT1 1LT[1]	LT2 2LT[2]	LT3 3LT[2]
9U3		**Seats, individual cloth (MSRP = No Charge) on Regular or Extended Cabs with Work Truck Decor, (MSRP = -$282.00 Credit) on Regular and Extended Cabs with LS Decor, (MSRP = $282.00) on Crew Cabs with Work Truck Decor (MSRP = No Charge) on Crew Cabs with LS Decor** Driver and passenger front individual seats in cloth trim (derived from RPO (AE7) 40/20/40 Split Bench with center 20" section removed). Does not include manual lumbar. Seats are manual, not power. Does not include a floor or roof console. Cloth rear seat with trim matching front seats will be provided on Extended and Crew Cabs. 1 - Requires trim codes (69C) Dark Charcoal or (52C) Tan on Regular or Extended Cab models. Requires Trim codes (69D) Dark Charcoal or (52D) Tan on Crew Cab models. Available with (8Q3) rear seat delete. Not available with SEO (9X5) trim override or RPO (AG1) 6-way power driver seat adjuster.	A[1]	A[1]	--	--	--
9S1		**Seats, individual vinyl (MSRP = -$282.00 Credit) on LS Decor and (MSRP = No Charge) on Work Truck Decor** Driver and passenger front individual seats in vinyl trim (derived from RPO (AE7) 40/20/40 Split Bench with center 20" section removed). Does not include manual lumbar. Seats are manual, not power. Does not include a floor or roof console. Standard vinyl rear seat with trim matching front seats will be provided on Extended Cabs. Note: "When SEO (9S1) is desired/ordered, do not attempt to have RPO (AE7) on the order along with 9S1. Also, RPO (A95) will be forced onto the order due to system requirements, although seat is derived from RPO (AE7)." 1 - Requires Trim codes (69V) Dark Charcoal or (52V) Tan. Available with (8Q3) rear seat delete. Not available with RPO (AG1) 6-way power driver seat adjuster.	A[1]	A[1]	--	--	--
9R3		**Sound system, delete (MSRP = No Charge)** Deletes the base sound system and provides a stowage compartment and a driver alert chime-tone module. Retains the antenna and base speaker system. 1 - Requires a Fleet or Government order type.	A[1]	A[1]	--	--	--
9R0		**Sound system, ETR AM/FM stereo with cassette (MSRP = $150.00) with Work Truck and (MSRP = No Charge) with LS or LT1 Decor** AM/FM stereo with cassette and digital clock, no CD player. Replaces the base radio. 1 - Requires a Fleet or Government sales order. Requires RPO (AE7) front 40/20/40 split-bench seat on 1LT. Not available with RPO (UK3) steering-wheel mounted audio controls, (UE1) OnStar or (PDB) OnStar Plus Package.	A[1]	A[1]	A[1]	--	--
		Exterior					
8S3		**Backup alarm (MSRP = $103.00)** 97 decibels back-up alarm. 1 - Requires RPO (LQ4) Vortec 6.0L V8 SFI engine or RPO (L18) Vortec 8.1L V8 SFI engine.	A[1]	A[1]	A[1]	A[1]	A[1]

Free Flow RPO Code	Ref. Only RPO Code	Description 1 - Equipment groups 1WT, 1LS, and 1LT available on C*25903, C*25753, C*25743, C*25953, and C*25943 Models. 2 - Equipment group 2LT and 3LT available on C*25753, C*25743, C*25953 and C*25943 Models	Reg., Ext. and Crew Cab			Ext. and Crew Cab	
			Work Truck 1WT[1]	LS 1LS[1]	LT1 1LT[1]	LT2 2LT[2]	LT3 3LT[2]
8E9		**Bumper, front, painted White (MSRP = $45.00)** White painted front bumper in lieu of standard chrome. 1 - Requires RPO (E63) Fleetside pickup box and RPO (V43) rear, painted step bumper, or RPO (E63) Fleetside pickup box and RPO (VF7) rear bumper delete or RPO (ZW9) pickup box delete. Not available with models C*25*43 or RPO (VB3) rear, chrome step bumper. 2 - Requires RPO (ZW9) pickup box delete, or RPO (VF7) rear bumper delete. Not available with models C*25*43.	A[1]	A[2]	--	--	--
6P3		**Camper Mirrors, power adjustable glass, manual extendable, non-heated (MSRP = $238.00)** Alternative mirrors replacing mirrors that are standard with SEO 5B5 Power windows and mirrors on a base decor truck. Right and left hand outside mirrors consisting of 50 square inch flat mirror surface positioned over a 20 square inch convex mirror surface with a common head. Includes turn signals in mirror glass. 1 - Requires RPO (AU3) power programmable door locks and SEO (5B5) power windows and mirrors.	A[1]	A[1]	--	--	--
5V1		**Carrier with spare wheel - no tire (MSRP = $82.00)** Spare wheel and tire carrier with a spare wheel but with no spare tire. 1 - Requires RPO (ZW9) pickup box delete. Not available on models C*25743 and C*25753 or with RPO (Z**) spare tire.	A[1]	A[1]	A[1]	A[1]	A[1]
9R1		**Decal delete, Pickup bed (MSRP = No Charge)** Deletes the "4x4" decal from the side of the Pickup bed on 4x4 Pickup trucks. 1 - Requires 4x4 models and RPO (E63) Fleetside pickup box. Not available with SEO (8F2) ornamentation delete.	A[1]	A[1]	A[1]	A[1]	A[1]
9M4		**Decal delete, tailgate (MSRP = No Charge)** Deletes the nameplate or decal on the Pickup bed tailgate. 1 - Requires RPO (E63) Fleetside pickup box. Not available with SEO (8F2) ornamentation delete.	A[1]	A[1]	--	--	--
5Z5		**Hubcap delete (MSRP = -$15.00 Credit)** Deletes decorative cap at center of wheel.	A	--	--	--	--
8V2		**Jack and tools delete (MSRP = -$32.00 Credit)** Deletes the jack and tire change tools that are standard. 1 - Requires a Fleet or Government order type.	A[1]	A[1]	A[1]	A[1]	A[1]
8X1		**Label, fasten safety belts (MSRP = $2.00)** "Fasten Safety Belts" reminder label on side door window glass.	A	A	A	A	A

Free Flow RPO Code	Ref. Only RPO Code	Description 1 - Equipment groups 1WT, 1LS, and 1LT available on C*25903, C*25753, C*25743, C*25953, and C*25943 Models. 2 - Equipment group 2LT and 3LT available on C*25753, C*25743, C*25953 and C*25943 Models	Reg., Ext. and Crew Cab			Ext. and Crew Cab	
			Work Truck 1WT[1]	LS 1LS[1]	LT1 1LT[1]	LT2 2LT[2]	LT3 3LT[2]
	5M1	**Mirror, exterior, power adjustable, manual folding, non-heated and non-extendable (MSRP = No Charge)** Provides the left and right hand side outside power adjustable, manual folding, non-heated, non-extendable, rear view mirrors that are included with SEO (5B5) Power windows and mirrors. Mirror head is the same size and configuration as the base mirror supplied on first tire Uplevel Décors except that the mirror head is not heated and not extendable. 1 - Included and only available with SEO (5B5) power windows and mirrors.	A[1]	A[1]	--	--	--
9N8		**Mirrors, auxiliary dual spot convex, stainless steel (MSRP = $50.00)** Driver and passenger side 6" (15.2 cm) diameter convex spot add-on mirrors with brackets for use with West Coast style mirrors. Mirrors shipped loose in vehicle. 1 - Requires SEO (9F7) outside West Coast-type mirrors.	A[1]	A[1]	--	--	--
9G1		**Mirrors, camper type with convex passenger side mirror head (MSRP = $109.00)** Camper type driver and passenger side manual Black 6" x 10" (15.2 cm x 25.4 cm) mirror heads on sail panel mounted extendable arms. Provides a dual segment mirror on the driver side and a full convex mirror on the passenger side. 1 - Available on models C*25903 and C*25953.	A[1]	A[1]	--	--	--
8G9		**Mirrors, outside, convex combination, stainless steel (MSRP = $278.00)** Provides a convex combination driver and passenger side outside rearview mirror with 6" x 10" (15.2 cm x 25.4 cm) flat positioned over a 6" x 6.5" (15.2 cm x 16.5 cm) convex mirror head. Provides drilling in cab and mirror assembly shipped loose. For use with wide body applications up to 96" (243.8 cm). 1 - Requires RPO (ZW9) pickup box delete on models C*25903 and C*25953. Not available with models C*25753.	A[1]	A[1]	--	--	--
9F7		**Mirrors, outside driver and passenger side West Coast type (MSRP = $125.00)** Provides large West Coast style mirrors with spring loaded pre-set feature. Mirrors are Black. Includes cab drillings and mirror assembly shipped loose.	A	A	--	--	--
8F2		**Ornamentation, delete (MSRP = No Charge)** Upfitter option. Deletes decals and nameplates on truck exterior. 1 - Requires Upfitter order type and single-tone paint.	A[1]	--	--	--	--
9F2		**Outside rearview mirror delete (MSRP = -$25.00 Credit)** Deletes driver and passenger side outside rear view mirrors that are standard. Includes incomplete vehicle documentation. 1 - Requires models C*25*43 and a Fleet order type.	A[1]	A[1]	--	--	--

Free Flow RPO Code	Ref. Only RPO Code	Description 1 - Equipment groups 1WT, 1LS, and 1LT available on C*25903, C*25753, C*25743, C*25953, and C*25943 Models. 2 - Equipment group 2LT and 3LT available on C*25753, C*25743, C*25953 and C*25943 Models	Reg., Ext. and Crew Cab			Ext. and Crew Cab	
			Work Truck 1WT[1]	LS 1LS[1]	LT1 1LT[1]	LT2 2LT[2]	LT3 3LT[2]
9V9		**Paints, solid (MSRP = No Charge),** Doeskin Tan 1 - Requires SEO (TGK) solid paint.	A[1]	A[1]	A[1]	A[1]	A[1]
9W4		**Paints, solid (MSRP = No Charge),** Tangier Orange 1 - Requires SEO (TGK) solid paint.	A[1]	A[1]	A[1]	A[1]	A[1]
9W3		**Paints, solid (MSRP = No Charge),** Wheatland Yellow 1 - Requires SEO (TGK) solid paint.	A[1]	A[1]	A[1]	A[1]	A[1]
9V5		**Paints, solid (MSRP = No Charge),** Woodland Green 1 - Requires SEO (TGK) solid paint.	A[1]	A[1]	A[1]	A[1]	A[1]
5Y0		**Provision for body mounted lamp with hook-up wiring (MSRP = $88.00)** Provides an instrument panel mounted switch and electrical hook-up behind the cab for a body upfitter to connect a body mounted warning or emergency lamp. 21 amp nominal rating. 1 - Requires RPO (LQ4) Vortec 6.0L V8 SFI engine, RPO (L18) Vortec 8.1L V8 SFI engine, RPO (AE7) front 40/20/40 split-bench seat, RPO (A95) front bucket seats. Not available with SEO (5G4) provision or cab roof-mounted lamp, SEO (5X7) provision for body-mounted lamp, RPO (VYU) Snow Plow Prep Package or (MW3) 5-speed manual transmission.	A[1]	A[1]	A[1]	--	--
5X7		**Provision for body mounted warning lamp (MSRP = $98.00)** Provides an instrument panel mounted switch and heavy duty electrical relay with hook-up terminal in the engine compartment for a body upfitter to connect a body mounted warning or emergency lamp. 40 amp nominal rating. 1 - Requires RPO (LQ4) Vortec 6.0L V8 SFI engine or RPO (L18) Vortec 8.1L V8 SFI engine. Not available with RPO (TP2) auxiliary heavy-duty, 600 cold-cranking-amp battery, SEO (8B0) 770 cold-cranking -amp battery with a auxiliary 600 cold-cranking-amp battery, SEO (5G4) provision for cab roof-mounted lamp, SEO (5Y0) provision for body-mounted lamp with hook-up wiring or RPO (VYU) Snow Plow Prep Package or (MW3) 5-speed manual transmission.	A[1]	A[1]	A[1]	A[1]	A[1]
5G4		**Provision for cab roof-mounted lamp (MSRP = $103.00)** Instrument panel mounted switch and wiring to the roof of the cab for body upfitter to install and connect a cab roof mounted warning or emergency lamp. 21 amp nominal rating. Circuit access instructions are furnished. 1 - Not available with RPO (VYU) Snow Plow Prep Package, RPO (UE1) OnStar, 1-year of Safe & Sound service, SEO (5Y0) Provision for body-mounted lamp with hook-up wiring, SEO (5X7) Provision for body-mounted warning lamp or RPO (CF5) power sunroof.	A[1]	A[1]	A[1]	--	--
TGK		**Solid Paint** SEO solid paint, one color 1 - Required with any SEO paint selection. May require an extended lead time.	A[1]	A[1]	A[1]	A[1]	A[1]

Free Flow RPO Code	Ref. Only RPO Code	Description 1 - Equipment groups 1WT, 1LS, and 1LT available on C*25903, C*25753, C*25743, C*25953, and C*25943 Models. 2 - Equipment group 2LT and 3LT available on C*25753, C*25743, C*25953 and C*25943 Models	Reg., Ext. and Crew Cab			Ext. and Crew Cab	
			Work Truck 1WT[1]	LS 1LS[1]	LT1 1LT[1]	LT2 2LT[2]	LT3 3LT[2]
9L3		**Spare tire delete (MSRP = -$45.00 Credit)** Deletes the spare tire only. Spare wheel and carrier remain. 1 - Requires RPO (E63) Fleetside pickup box.	A[1]	A[1]	A[1]	A[1]	A[1]
5Z4		**Spare wheel and tire delete (MSRP = -$110.00 Credit)** Deletes the spare tire, wheel and carrier that are base equipment. 1 - Requires RPO (E63) Fleetside pickup box. Not available with RPO (SAF) spare tire lock.	A[1]	A[1]	A[1]	A[1]	A[1]
5Q1		**Tail Lamp delete (MSRP = -$27.00 Credit)** Upfitter option. Deletes tail lamps and license plate lamp. Body builder must supply the rear lighting system. Certain types of rear lamp installations may require adding a resistor. 1 - Requires RPO (ZW9) pickup box delete and models C*25903 or C*25953.	A[1]	A[1]	--	--	--
4GK		**Tire, spare LT245/75R16 (E) Blackwall 10 Ply on-off road (MSRP with RPO (E63) pickup body = $11.00 with RPO (ZW9) = $ 345.00)** This spare replaces standard highway tread spare. 1 - Requires RPO (QIW) LT245/75R16E on-/off-road, blackwall tires. Not available with SEO (5Z4) spare wheel and tire delete.	A[1]	A[1]	A[1]	A[1]	A[1]
5G2		**Wheels, painted White (MSRP = $45.00)** Front and rear. Spare wheel will not be White.	A	--	--	--	--
		Mechanical					
8C6		**Alternator, 145 amp (MSRP = $140.00)** 145 amp alternator in place of the standard 105 amp alternator. 1 - Requires RPO (LQ4) Vortec 6.0L V8 SFI engine or RPO (L18) Vortec 8.1L V8 SFI engine. Not available with RPO (VYU) Snow Plow Prep Package.	A[1]	A[1]	A[1]	A[1]	A[1]
8X5		**Alternators, dual 105 amp (MSRP =$224.00)** Provides 210 amps total alternator power from a dual 105 amp alternator system. 1 - Requires RPO (LBZ) Duramax 6.6L Turbo Diesel V8 engine. Not available with RPO (VYU) Snow Plow Prep Package.	A[1]	A[1]	A[1]	A[1]	A[1]
8B0		**Batteries, 770 CCA with a 600 CCA auxiliary (MSRP = $190.00)** Provides a 770 CCA main cranking battery with a 600 CCA auxiliary battery. Auxiliary battery has an isolator and is not wired to ignition. Auxiliary battery provides an auxiliary electrical power source. 1 - Requires RPO (LQ4) Vortec 6.0L V8 SFI engine or RPO (L18) Vortec 8.1L V8 SFI engine. Not available on models C*25*43, RPO (TP2) auxiliary, heavy-duty, 600 cold-cranking-amp battery or SEO (7Y9) single 770 cold-cranking-amp battery.	A[1]	A[1]	A[1]	A[1]	A[1]
7Y9		**Battery, Single 770 CCA (MSRP = $56.00)** 1 - Requires RPO (LQ4) Vortec 6.0L V8 SFI engine or RPO (L18) Vortec 8.1L V8 SFI engine. Not available with RPO (TP2) auxiliary, heavy-duty, 600 cold-cranking-amp battery.	A[1]	A[1]	A[1]	A[1]	A[1]

Free Flow RPO Code	Ref. Only RPO Code	Description 1 - Equipment groups 1WT, 1LS, and 1LT available on C*25903, C*25753, C*25743, C*25953, and C*25943 Models. 2 - Equipment group 2LT and 3LT available on C*25753, C*25743, C*25953 and C*25943 Models	Reg., Ext. and Crew Cab			Ext. and Crew Cab	
			Work Truck 1WT[1]	LS 1LS[1]	LT1 1LT[1]	LT2 2LT[2]	LT3 3LT[2]
7Z1		**Horn, high note (MSRP =.$20.00)** High note horn in addition to the low note horn.	A	A	--	--	--
9L4		**Power supply, 12 volt (MSRP = $168.00)** 12 volt direct power supply from the battery with two separate 30 amp fused circuits. Each circuit has a 30 amp mini fuse for both positive and ground to protect electrical accessories. Main supply lead has a 40 amp maxi-fuse. All fuses are serviceable. Provides either direct battery power or operation through the ignition system. Hook-up wire is provided under the passenger side glove box. Operational amperage is 21 amps each circuit; 28 amps total. Hook-up and operational instructions are provided. 1 - Not available with RPO (U2K) XM Satellite Radio, RPO (UE1) OnStar, RPO (U42) Entertainment System or RPO (MW3) 5-speed manual transmission.	A[1]	A[1]	A[1]	A[1]	A[1]
		Ship Thru Codes					
VAB		**Ship Thru for Models C*25**3 (MSRP = $165.00)** Produced in Pontiac Assembly and shipped to NBC Truck Equipment	A	A	A	A	A
VAL		**Ship Thru for TDM Vehicle Management (MSRP = $310.00)** Vehicle will ship from Flint Assembly to TDM in Auburn Hills, MI and return to Pontiac East Assembly for final destination 1 - Requires models CK25743 or CK25943.	A[1]	A[1]	A[1]	A[1]	A[1]
VAY		**Ship Thru for Models C*25**3 (MSRP = $165.00)** Produced in Pontiac Assembly and shipped to K&B Mounting	A	A	A	A	A
VBK		**Ship Thru for Models C*25**3 (MSRP = $270.00)** Produced in Pontiac Assembly and shipped to Ft. Wayne Fleet Equipment	A	A	A	A	A
VCB		**Ship Thru for Models C*25*43 (MSRP = $120.00)** Produced in Flint Assembly and shipped to Monroe Truck Equipment (in Flint) and back to Flint Assembly.	A	A	A	A	A
VFI		**Ship Thru for TDM Vehicle Management (MSRP = $165.00)** In Auburn Hills, MI from the Pontiac Assembly Plant 1 - Requires models CK25903 or CK25753.	A[1]	A[1]	A[1]	A[1]	A[1]
VFW		**Ship Thru for Models C*25*43 (MSRP = $255.00)** Produced in Flint Assembly and shipped to NBC Truck Equipment	A	A	A	A	A
VGH		**Ship Thru for Models C*25**3 (MSRP = $160.00)** Produced in Pontiac Assembly and shipped to Monroe Truck Equipment	A	A	A	A	A
VGZ		**Ship Thru for Models C*25**3 (MSRP = $165.00)** Produced in Pontiac Assembly and shipped to Canfield	A	A	A	A	A
VSQ		**Ship Thru for Models C*25*43 (MSRP = $270.00)** Produced in Flint Assembly and shipped to Monroe Truck Equipment (in Janesville, WI) and onto Janesville Assembly.	A	A	A	A	A

2007 Chevrolet Truck Silverado 2500HD Classic — SEO OPTIONS/SHIP THRU CODES

Free Flow RPO Code	Ref. Only RPO Code	Description 1 - Equipment groups 1WT, 1LS, and 1LT available on C*25903, C*25753, C*25743, C*25953, and C*25943 Models. 2 - Equipment group 2LT and 3LT available on C*25753, C*25743, C*25953 and C*25943 Models	Reg., Ext. and Crew Cab			Ext. and Crew Cab	
			Work Truck 1WT[1]	LS 1LS[1]	LT1 1LT[1]	LT2 2LT[2]	LT3 3LT[2]
VUD		**Ship Thru for Models C*25*43 (MSRP = $120.00)** Produced in Flint Assembly and shipped to Knapheide Truck Equipment	A	A	A	A	A
VUI		**Ship Thru for Models C*25*43 (MSRP = $295.00)** Produced in Flint Assembly and shipped to Ft. Wayne Fleet Equipment	A	A	A	A	A
VUM		**Ship Thru for Models C*25*43 (MSRP = $375.00)** Produced in Flint Assembly and shipped to Buckeye Truck Equipment	A	A	A	A	A
VWS		**Ship Thru for Models C*25**3 (MSRP = $310.00)** Produced in Pontiac Assembly and shipped to Buckeye Truck Equipment	A	A	A	A	A
VYC		**Ship Thru for Models C*25**3 (MSRP = $160.00)** Produced in Pontiac Assembly and shipped to Knapheide Truck Equipment	A	A	A	A	A
VYS		**Ship Thru for Models C*25**3 (MSRP = $165.00)** Produced in Pontiac Assembly and shipped to Masterack Truck Equipment	A	A	A	A	A

2007 Chevrolet Truck Silverado 2500HD Classic — ONSTAR FLEET CODES

S = Standard Equipment A = Available -- (dashes) = Not Available D = ADI Available
■ = Included in Equipment Group □ = Included in Equipment Group but upgradeable

*Indicates availability of feature on multiple models. For example, it indicates feature availability on 2WD and 4WD Models or Rear wheel drive and All-wheel drive Models.

Codes listed in the shaded column titled Ref. Only RPO Code are for internal use only and should not be ordered.

Free Flow RPO Code	Ref. Only RPO Code	Description 1 - Equipment groups 1WT, 1LS, and 1LT available on C*25903, C*25753, C*25743, C*25953, and C*25943 Models. 2 - Equipment group 2LT and 3LT available on C*25753, C*25743, C*25953 and C*25943 Models	Reg., Ext. and Crew Cab			Ext. and Crew Cab	
			Work Truck 1WT[1]	LS 1LS[1]	LT1 1LT[1]	LT2 2LT[2]	LT3 3LT[2]
R8G		**OnStar 1 Additional Year of Safe and Sound Service (MSRP= $199).** Provides 1 year of Safe and Sound service following the first year of OnStar service included in the price of the vehicle. Fleet may also order (RFB) 2-Years OnStar Business Vehicle Manager Service **1 - Requires one of the following Fleet or Government order types: FLS, FNR, FRC, FBC, FGO or FEF. Not available with R8P, R8U, R8V, R8W, R8Y or R8Z. Requires (UE1) 1-Year OnStar service.**	--	--	A[1]	A[1]	A[1]
R8P		**OnStar 2 Additional Years of Safe and Sound Service (MSRP=$379)** Provides 2 additional years of Safe and Sound service following the first year of OnStar service included in the price of the vehicle. Fleet may also order (RFC) 3-Years OnStar Business Vehicle Manager Service **1 - Requires one of the following Fleet or Government order types: FLS, FNR, FRC, FBC, FGO or FEF. Not available with R8G, R8U, R8V, R8W, R8Y or R8Z. Requires (UE1) 1-Year OnStar service.**	--	--	A[1]	A[1]	A[1]
R8U		**OnStar 3-Years Safe and Sound Service (MSRP=$679)** Provides 3 Years of Safe and Sound service. Includes cost of hardware. Fleet may also order (RFC) 3-Years OnStar Business Vehicle Manager Service **1 - Requires one of the following Fleet or Government order types: FLS, FNR, FRC, FBC, FGO or FEF. Requires (UE1) 1-Year OnStar service. Not available with R8G, R8P, R8V, R8W, R8Y or R8Z.**	--	--	A[1]	A[1]	A[1]
R8V		**OnStar 3-Years Directions and Connections Service (MSRP=$979)** Provides 3 years of Directions and Connections service. Includes cost of hardware. Fleet may also order (RFC) 3-Years OnStar Business Vehicle Manager Service **1 - Requires one of the following Fleet or Government order types: FLS, FNR, FRC, FBC, FGO or FEF. Requires (UE1) 1-Year OnStar service. Not available with R8G, R8P, R8U, R8W, R8Y or R8Z.**	--	--	A[1]	A[1]	A[1]
R8W		**OnStar 1-Year Directions and Connections Service (MSRP=$100)** Provides an upgrade from Safe and Sound service included in the price of the vehicle in the first year. Fleet may also order (RFA) 1-Year OnStar Business Vehicle Manager Service **1 - Requires one of the following Fleet or Government order types: FLS, FNR, FRC, FBC, FGO or FEF. Not available with R8G, R8P, R8U, R8V, R8Y or R8Z. Requires (UE1) 1-Year OnStar service.**	--	--	A[1]	A[1]	A[1]

2007 Chevrolet Truck Silverado 2500HD Classic — ONSTAR FLEET CODES

Free Flow RPO Code	Ref. Only RPO Code	Description 1 - Equipment groups 1WT, 1LS, and 1LT available on C*25903, C*25753, C*25743, C*25953, and C*25943 Models. 2 - Equipment group 2LT and 3LT available on C*25753, C*25743, C*25953 and C*25943 Models	Reg., Ext. and Crew Cab			Ext. and Crew Cab	
			Work Truck 1WT[1]	LS 1LS[1]	LT1 1LT[1]	LT2 2LT[1]	LT3 3LT[2]
R8Y		**OnStar 2-Years Directions and Connections Service (MSRP=$399)** Provides cumulative 2 Years of Directions and Connections service. In the first year, this is an upgrade from Safe and Sound service included in the price of the vehicle. Fleet may also order (RFB) 2-Years OnStar Business Vehicle Manager Service **1 - Requires one of the following Fleet or Government order types: FLS, FNR, FRC, FBC, FGO or FEF. Not available with R8G, R8P, R8U, R8V, R8W or R8Z. Requires (UE1) 1-Year OnStar service.**	--	--	A[1]	A[1]	A[1]
R8Z		**OnStar 3-Years Directions and Connections Service (MSRP=$679)** Provides cumulative 3 Years of Directions and Connections service. In the first year, this is an upgrade from Safe and Sound service included in the price of the vehicle. Fleet may also order (RFC) 3-Year OnStar Business Vehicle Manager Service **1 - Requires one of the following Fleet or Government order types: FLS, FNR, FRC, FBC, FGO or FEF. Not available with R8G, R8P, R8U, R8V, R8W or R8Y. Requires (UE1) 1-Year OnStar service.**	--	--	A[1]	A[1]	A[1]
RFA		**OnStar 1-Year Business Vehicle Manager Service (MSRP=$25)** Provides one year of OnStar Business Vehicle Manager Service **1 - Requires one of the following Fleet or Government order types: FLS, FNR, FRC, FBC, FGO or FEF. Not available with RFB or RFC. Requires (UE1) 1-Year OnStar service or (R8W) 1-Year Directions and Connections Service.**	--	--	A[1]	A[1]	A[1]
RFB		**OnStar 2-Years Business Vehicle Manager Service (No charge)** Provides two years of OnStar Business Vehicle Manager Service **1 - Requires one of the following Fleet or Government order types: FLS, FNR, FRC, FBC, FGO or FEF. Not available with RFA or RFC. Requires (UE1) 1-Year OnStar service and either (R8G) or (R8Y) which provide for a total of two years of OnStar service.**	--	--	A[1]	A[1]	A[1]
RFC		**OnStar 3-Years Business Vehicle Manager Service (No Charge)** Provides three years of OnStar Business Vehicle Manager Service **1 - Requires one of the following Fleet or Government order types: FLS, FNR, FRC, FBC, FGO or FEF. Not available with RFA or RFB. Requires (UE1) 1-Year OnStar service and either (R8P), (R8U), (R8V), or (R8Z) which provide for a total of three years of OnStar service.**	--	--	A[1]	A[1]	A[1]

2007 Chevrolet Truck Silverado 2500HD Classic — ADI - ACCESSORIES

There is no data available for Silverado 2500HD Classic.

2007 Chevrolet Truck Silverado 2500HD DIMENSIONS - 2WD
Classic

All dimensions in inches (mm) unless otherwise stated.

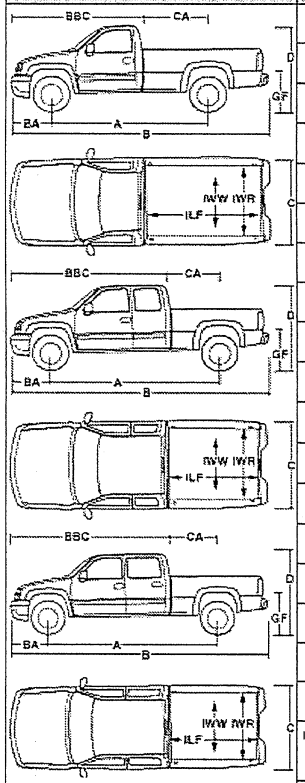

	Specifications	CC25903 2WD Regular Cab Long Box	CC25753 2WD Extended Cab Standard Box	CC25953 2WD Extended Cab Long Box	CC25743 2WD Crew Cab Standard Box	CC25943 2WD Crew Cab Long Box
A	Wheelbase	133.00 (3378)	143.50 (3645)	157.50 (4000)	153.00 (3886)	167.00 (4242)
B	Overall length	224.50 (5702)	230.20 (5847)	249.00 (6325)	239.70 (6088)	258.50 (6566)
C	Body width	79.70 (2024)	79.70 (2024)	79.70 (2024)	79.70 (2024)	79.70 (2024)
D	Overall height	76.20 (1935)	76.20 (1935)	76.20 (1935)	77.00 (1956)	77.00 (1956)
	Head room, front	41.00 (1041)	41.00 (1041)	41.00 (1041)	41.00 (1041)	41.00 (1041)
	Head room, rear	–	38.40 (975)	38.40 (975)	39.00 (991)	39.00 (991)
	Shoulder room, front	65.20 (1656)	65.20 (1656)	65.20 (1656)	65.20 (1656)	65.20 (1656)
	Shoulder room, rear	–	66.30 (1684)	66.30 (1684)	65.10 (1654)	65.10 (1654)
	Hip room, front	61.40 (1560)	61.40 (1560)	61.40 (1560)	61.40 (1560)	61.40 (1560)
	Hip room, rear	–	61.50 (1562)	61.50 (1562)	62.90 (1598)	62.90 (1598)
	Leg room, front	41.30 (1049)	41.30 (1049)	41.30 (1049)	41.30 (1049)	41.30 (1049)
	Leg room, rear	–	33.70 (856)	33.70 (856)	39.10 (993)	39.10 (993)
CA	Cab to axle	55.90 (1420)	41.90 (1064)	55.90 (1420)	41.90 (1064)	55.90 (1420)
BA	Front bumper to axle	37.00 (940)	37.00 (940)	37.00 (940)	37.00 (940)	37.00 (940)
	Rear bumper to axle	52.20 (1326)	52.20 (1326)	52.20 (1326)	52.20 (1326)	52.20 (1326)
ILF	Inside length, at floor	97.60 (2479)	78.70 (1999)	97.60 (2479)	78.70 (1999)	97.60 (2479)
	Inside height	19.50 (495)	19.50 (495)	19.50 (495)	19.50 (495)	19.50 (495)
	Inside width, at floor	64.80 (1646)	64.80 (1646)	64.80 (1646)	64.80 (1646)	64.80 (1646)
IWR	Tailgate width	61.90 (1572)	61.90 (1572)	61.90 (1572)	61.90 (1572)	61.90 (1572)
BBC	Front bumper to back of cab	114.10	138.60	138.60	148.10	148.10

2007 Chevrolet Truck Silverado 2500HD DIMENSIONS - 2WD
Classic

All dimensions in inches (mm) unless otherwise stated.

	Specifications	CC25903 2WD Regular Cab Long Box	CC25753 2WD Extended Cab Standard Box	CC25953 2WD Extended Cab Long Box	CC25743 2WD Crew Cab Standard Box	CC25943 2WD Crew Cab Long Box
	cab	(2898)	(3520)	(3520)	(3762)	(3762)
GF	Ground to top of rear load floor	TBD	TBD	TBD	TBD	TBD
IWW	Inside width, between wheelhousing	50.00 (1270)	50.00 (1270)	50.00 (1270)	50.00 (1270)	50.00 (1270)
	Ground clearance, front	9.10 (231)	9.10 (231)	9.10 (231)	9.10 (231)	9.10 (231)
	Ground clearance, rear	12.10 (307)	12.10 (307)	12.10 (307)	12.10 (307)	12.10 (307)

Published dimensions indicated are without optional equipment or accessories. Additional accessories or equipment ordered at the customer's request can result in a minor change in these dimensions.

2007 Chevrolet Truck Silverado 2500HD DIMENSIONS - 4WD
Classic

All dimensions in inches (mm) unless otherwise stated.

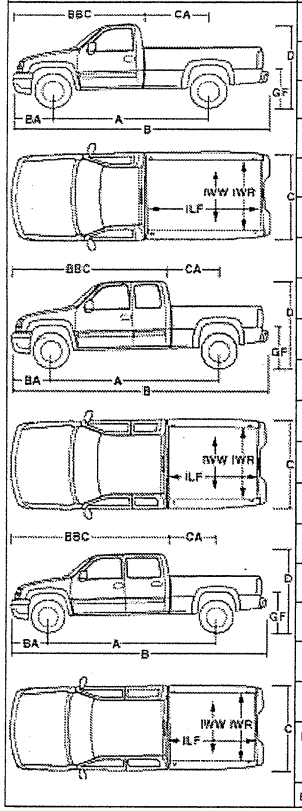

	Specifications	CK25903 4x4 Regular Cab Long Box	CK25753 4x4 Extended Cab Standard Box	CK25953 4x4 Extended Cab Long Box	CK25743 4x4 Crew Cab Standard Box	CK25943 4x4 Crew Cab Long Box
A	Wheelbase	133.00 (3378)	143.50 (3645)	157.50 (4000)	153.00 (3886)	167.00 (4242)
B	Overall length	224.50 (5702)	230.20 (5847)	249.00 (6325)	239.70 (6088)	258.50 (6566)
C	Body width	79.70 (2024)	79.70 (2024)	79.70 (2024)	79.70 (2024)	79.70 (2024)
D	Overall height	76.20 (1935)	76.20 (1935)	76.20 (1935)	77.00 (1956)	77.00 (1956)
	Head room, front	41.00 (1041)	41.00 (1041)	41.00 (1041)	41.00 (1041)	41.00 (1041)
	Head room, rear	–	38.40 (975)	38.40 (975)	39.00 (991)	39.00 (991)
	Shoulder room, front	65.20 (1656)	65.20 (1656)	65.20 (1656)	65.20 (1656)	65.20 (1656)
	Shoulder room, rear	–	66.30 (1684)	66.30 (1684)	65.10 (1654)	65.10 (1654)
	Hip room, front	61.40 (1560)	61.40 (1560)	61.40 (1560)	61.40 (1560)	61.40 (1560)
	Hip room, rear	–	61.50 (1562)	61.50 (1562)	62.90 (1598)	62.90 (1598)
	Leg room, front	41.30 (1049)	41.30 (1049)	41.30 (1049)	41.30 (1049)	41.30 (1049)
	Leg room, rear	–	33.70 (856)	33.70 (856)	39.10 (993)	39.10 (993)
CA	Cab to axle	55.90 (1420)	41.90 (1064)	55.90 (1420)	41.90 (1064)	55.90 (1420)
BA	Front bumper to axle	37.00 (940)	37.00 (940)	37.00 (940)	37.00 (940)	37.00 (940)
	Rear bumper to axle	52.20 (1326)	52.20 (1326)	52.20 (1326)	52.20 (1326)	52.20 (1326)
ILF	Inside length, at floor	97.60 (2479)	78.70 (1999)	97.60 (2479)	78.70 (1999)	97.60 (2479)
	Inside height	19.50 (495)	19.50 (495)	19.50 (495)	19.50 (495)	19.50 (495)
	Inside width, at floor	64.80 (1646)	64.80 (1646)	64.80 (1646)	64.80 (1646)	64.80 (1646)
IWR	Tailgate width	61.90 (1572)	61.90 (1572)	61.90 (1572)	61.90 (1572)	61.90 (1572)
BBC	Front bumper to back of	114.10	138.60	138.60	148.10	148.10

2007 Chevrolet Truck Silverado 2500HD DIMENSIONS - 4WD
Classic

All dimensions in inches (mm) unless otherwise stated.

	Specifications	CK25903 4x4 Regular Cab Long Box	CK25753 4x4 Extended Cab Standard Box	CK25953 4x4 Extended Cab Long Box	CK25743 4x4 Crew Cab Standard Box	CK25943 4x4 Crew Cab Long Box
	cab	(2898)	(3520)	(3520)	(3762)	(3762)
GF	Ground to top of rear load floor	TBD	TBD	TBD	TBD	TBD
IWW	Inside width, between wheelhousing	50.00 (1270)	50.00 (1270)	50.00 (1270)	50.00 (1270)	50.00 (1270)
	Ground clearance, front	10.60 (269)	10.60 (269)	10.60 (269)	10.60 (269)	10.60 (269)
	Ground clearance, rear	13.60 (345)	13.60 (345)	13.60 (345)	13.60 (345)	13.60 (345)

Published dimensions indicated are without optional equipment or accessories. Additional accessories or equipment ordered at the customer's request can result in a minor change in these dimensions.

2007 Chevrolet Truck Silverado 2500HD SPECS - REGULAR AND EXTENDED CAB Classic

	CC25903 2WD Regular Cab Long Box	CK25903 4x4 Regular Cab Long Box	CC25753 2WD Extended Cab Standard Box	CK25753 4x4 Extended Cab Standard Box	CC25953 2WD Extended Cab Long Box	CK25953 4x4 Extended Cab Long Box
Specifications						
Front shock absorber diameter, in. (mm)	1.38 (35)	1.38 (35)	1.38 (35)	1.38 (35)	1.38 (35)	1.38 (35)
Front stabilizer bar diameter, in. (mm)	1.42 (36)	1.42 (36)	1.42 (36)	1.42 (36)	1.42 (36)	1.42 (36)
Rear shock absorber diameter, in. (mm)	1.38 (35)	1.26 (32)	1.26 (32)	1.38 (35)	1.26 (32)	1.38 (35)
Turning diameter, curb-to-curb, ft. (m)	43.8 (13.4)	43.8 (13.4)	46.8 (14.3)	46.8 (14.3)	50.8 (15.5)	50.8 (15.5)
Capacities						
Front axle, lbs. (kg)	4800 (2177)	4800 (2177)	4800 (2177)	4800 (2177)	4800 (2177)	4800 (2177)
Front spring capacity, lbs. (kg)	4500 (2041)	4500 (2041)	4500 (2041)	4800 (2177)	4500 (2041)	4800 (2177)
Rear axle, lbs. (kg)	6900 (3130)	6900 (3130)	6900 (3130)	6900 (3130)	6900 (3130)	6900 (3130)
Rear spring capacity, lbs. (kg)	6084 (2760)	6084 (2760)	6084 (2760)	6084 (2760)	6084 (2760)	6084 (2760)
Curb weight, lbs. (kg)	5142 (2332)	5398 (2449)	5398 (2449)	5659 (2567)	5561 (2522)	5848 (2653)
Cargo volume, cargo box, cu. ft. (liters)	73.9 (2092.8)	73.9 (2092.8)	56.9 (1611.4)	56.9 (1611.4)	73.9 (2092.8)	73.9 (2092.8)
Payload[1], lbs. (kg)	4058 (1841)	3802 (1725)	3802 (1725)	3541 (1606)	3639 (1651)	3352 (1520)
Gross Vehicle Weight Rating (GVWR), lbs. (kg)	9200 (4173)	9200 (4173)	9200 (4173)	9200 (4173)	9200 (4173)	9200 (4173)
Front Gross Axle Weight Rating (GAWR), lbs. (kg)	4410 (2000)	4500 (2041)	4410 (2000)	4670 (2118)	4500 (2041)	4670 (2118)
Rear Gross Axle Weight Rating (GAWR), lbs. (kg)	6084 (2760)	6084 (2760)	6084 (2760)	6084 (2760)	6084 (2760)	6084 (2760)
Fuel capacity, approximate, gallon (liters)	34 (129)	34 (129)	26 (98)	26 (98)	34 (129)	34 (129)
Seating capacity (front/rear)	3	3	3/3	3/3	3/3	3/3

1. Maximum payload capacity includes weight of driver, passengers, optional equipment and cargo.

2007 Chevrolet Truck Silverado 2500HD SPECS - CREW CAB Classic

	CC25743 2WD Crew Cab Standard Box	CK25743 4x4 Crew Cab Standard Box	CC25943 2WD Crew Cab Long Box	CK25943 4x4 Crew Cab Long Box
Specifications				
Front shock absorber diameter, in. (mm)	1.38 (35)	1.38 (35)	1.38 (35)	1.38 (35)
Front stabilizer bar diameter, in. (mm)	1.25 (32)	1.25 (32)	1.25 (32)	1.25 (32)
Rear shock absorber diameter, in. (mm)	1.38 (35)	1.38 (35)	1.38 (35)	1.38 (35)
Turning diameter, curb-to-curb, ft. (m)	49.6 (15.1)	49.6 (15.1)	53.5 (16.3)	53.5 (16.3)
Capacities				
Front axle, lbs. (kg)	4800 (2177)	4800 (2177)	4800 (2177)	4800 (2177)
Front spring capacity, lbs. (kg)	4500 (2041)	4800 (2177)	4800 (2177)	4800 (2177)
Rear axle, lbs. (kg)	6900 (3130)	6900 (3130)	6900 (3130)	6900 (3130)
Rear spring capacity, lbs. (kg)	6084 (2760)	6084 (2760)	6084 (2760)	6084 (2760)
Curb weight, lbs. (kg)	5594 (2537)	5883 (2669)	5745 (2606)	6037 (2738)
Cargo volume, cargo box, cu. ft. (liters)	56.9 (1611.4)	56.9 (1611.4)	73.9 (2092.8)	73.9 (2092.8)
Payload[2], lbs. (kg)	3606 (1636)	3317 (1505)	3455 (1567)	3163 (1435)
Gross Vehicle Weight Rating (GVWR), lbs. (kg)	9200 (4173)	9200 (4173)	9200 (4173)	9200 (4173)
Front Gross Axle Weight Rating (GAWR), lbs. (kg)	4410 (2000)	4670 (2118)	4670 (2118)	4800 (2177)
Rear Gross Axle Weight Rating (GAWR), lbs. (kg)	6084 (2760)	6084 (2760)	6084 (2760)	6084 (2760)
Fuel capacity, approximate, gallon (liters)	26 (98)	26 (98)	34 (129)	34 (129)
Seating capacity (front/rear)	3/3	3/3	3/3	3/3

2. Maximum payload capacity includes weight of driver, passengers, optional equipment and cargo.

2007 Chevrolet Truck Silverado 2500HD WHEELS
Classic

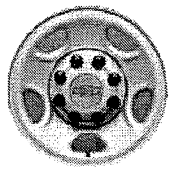	**Wheels**, 4 - 16" x 6.5" (40.6 cm x 16.5 cm) 8-lug painted steel
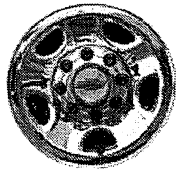	PY2 **Wheels**, 4 - 16" x 6.5" (40.6 cm x 16.5 cm) 8-lug chrome-styled steel, includes chrome center caps and steel spare
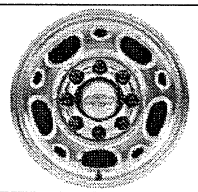	PY0 **Wheels**, 4 - 16" x 6.5" (40.6 cm x 16.5 cm) 8-lug polished forged aluminum, includes chrome center caps and steel spare

2007 Chevrolet Truck Silverado 2500HD RADIOS
Classic

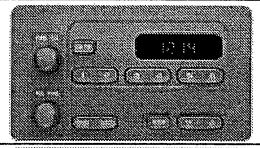	UM7 **Audio system**, AM/FM stereo with seek-and-scan and digital clock
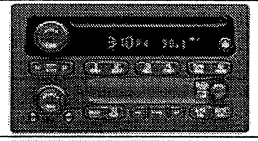	UB0 **Audio system**, AM/FM stereo with CD player, seek-and-scan, digital clock, auto-tone control, Radio Data System (RDS) and speed-compensated volume
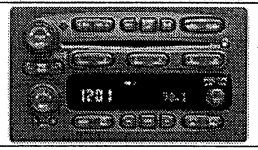	UC6 **Audio system**, AM/FM stereo with 6-disc CD changer, seek-and-scan, digital clock, auto-tone control, Radio Data System (RDS), speed-compensated volume and TheftLock

2007 Chevrolet Truck Silverado 2500HD Classic — TRAILERING SPECS - Automatic Transmission Ratings with Ball Hitch for Heavy Duty Models

Maximum trailer ratings are calculated assuming standard equipped vehicle, driver and required trailering equipment. The weight of optional equipment, passengers and cargo will reduce the maximum trailer weight your vehicle can tow. 10 to 15% of the trailer weight is the recommended trailer tongue load.

Automatic Transmission Ratings with Ball Hitch for Heavy Duty Models

Model	(LQ4) Vortec 6.0L V8 SFI		(L18) Vortec 8.1L V8 SFI		(LBZ) Duramax 6.6L Turbo Diesel V8	
	Axle Ratio	Maximum Trailer Weight lbs. (kg)	Axle Ratio	Maximum Trailer Weight lbs. (kg)	Axle Ratio	Maximum Trailer Weight lbs. (kg)
CC25903	4.10	10500 (4763)	3.73	12000 (5443)	3.73	12000 (5443)
			4.10	12000 (5443)		
CC25753	4.10	10300 (4672)	3.73	12000 (5443)	3.73	12000 (5443)
			4.10	12000 (5443)		
CC25953	4.10	10200 (4627)	3.73	12000 (5443)	3.73	12000 (5443)
			4.10	12000 (5443)		
CC25743	4.10	10100 (4581)	3.73	12000 (5443)	3.73	12000 (5443)
			4.10	12000 (5443)		
CC25943	4.10	10000 (4536)	3.73	12000 (5443)	3.73	12000 (5443)
			4.10	12000 (5443)		
CK25903	4.10	10300 (4672)	3.73	12000 (5443)	3.73	12000 (5443)
			4.10	12000 (5443)		
CK25753	4.10	10000 (4536)	3.73	12000 (5443)	3.73	12000 (5443)
			4.10	12000 (5443)		
CK25953	4.10	9900 (4491)	3.73	12000 (5443)	3.73	12000 (5443)
			4.10	12000 (5443)		
CK25743	4.10	9800 (4445)	3.73	12000 (5443)	3.73	12000 (5443)
			4.10	12000 (5443)		
CK25943	4.10	9700 (4400)	3.73	12000 (5443)	3.73	12000 (5443)
			4.10	12000 (5443)		

GCWR For Engine/Rear Axle Ratio Combination with Automatic Transmission

Engine	(GCWR) Gross Combination Weight Ratings lbs. (kg)		
	16000 (7258)	20000 (9072)	22000 (9979)
(LQ4) Vortec 6.0L V8 SFI	4.10		
(L18) Vortec 8.1L V8 SFI		3.73	4.10
(LBZ) Duramax 6.6L Turbo Diesel V8			3.73

2007 Chevrolet Truck Silverado 2500HD Classic — TRAILERING SPECS - Manual or Automatic Transmission Ratings with 5th Wheel or Gooseneck for Heavy Duty Models

Maximum trailer ratings are calculated assuming standard equipped vehicle, driver and required trailering equipment. The weight of optional equipment, passengers and cargo will reduce the maximum trailer weight your vehicle can tow. 15 to 25% of the trailer weight is the recommended 5th Wheel or Gooseneck kingpin load.

Manual or Automatic Transmission Ratings with 5th Wheel or Gooseneck for Heavy Duty Models

Model	(LQ4) Vortec 6.0L V8 SFI		(L18) Vortec 8.1L V8 SFI		(LBZ) Duramax 6.6L Turbo Diesel V8	
	Axle Ratio	Maximum Trailer Weight lbs. (kg)	Axle Ratio	Maximum Trailer Weight lbs. (kg)	Axle Ratio	Maximum Trailer Weight lbs. (kg)
CC25903	4.10	10500 (4763)	3.73	14100 (6396)	3.73	15900 (7212)
			4.10	16100 (7303)		
CC25753	4.10	10300 (4672)	3.73	13900 (6305)	3.73	15700 (7122)
			4.10	15900 (7212)		
CC25953	4.10	10200 (4627)	3.73	13700 (6214)	3.73	15500 (7031)
			4.10	15700 (7122)		
CC25743	4.10	10100 (4581)	3.73	13600 (6169)	3.73	15400 (6985)
			4.10	15600 (7076)		
CC25943	4.10	10000 (4536)	3.73	13500 (6124)	3.73	15100 (6849)
			4.10	15500 (7031)		
CK25903	4.10	10300 (4672)	3.73	13800 (6260)	3.73	15600 (7076)
			4.10	15800 (7167)		
CK25753	4.10	10000 (4536)	3.73	13600 (6169)	3.73	15400 (6985)
			4.10	15600 (7076)		
CK25953	4.10	9900 (4491)	3.73	13400 (6078)	3.73	14800 (6713)
			4.10	15400 (6985)		
CK25743	4.10	9800 (4445)	3.73	13300 (6033)	3.73	14200 (6441)
			4.10	15300 (6940)		
CK25943	4.10	9700 (4400)	3.73	13200 (5988)	3.73	13200 (5988)
			4.10	14600 (6623)		

Addition of trailer kingpin weight cannot cause vehicle weights to exceed Rear Gross Axle Weight Rating (RGAWR) or Gross Vehicle Weight Rating (GVWR).

5th wheel hitch is available as a dealer installed accessory.

(Z82) Trailering equipment, heavy-duty, includes trailer hitch platform and trailer electrical connector.

GCWR For Engine/Rear Axle Ratio Combination with Automatic Transmission

Engine	(GCWR) Gross Combination Weight Ratings lbs. (kg)		
	16000 (7258)	20000 (9072)	22000 (9979)
(LQ4) Vortec 6.0L V8 SFI	4.10		

Maximum trailer ratings are calculated assuming standard equipped vehicle, driver and required trailering equipment. The weight of optional equipment, passengers and cargo will reduce the maximum trailer weight your vehicle can tow. 15 to 25% of the trailer weight is the recommended 5th Wheel or Gooseneck kingpin load.

GCWR For Engine/Rear Axle Ratio Combination with Automatic Transmission			
Engine	(GCWR) Gross Combination Weight Ratings lbs. (kg)		
	16000 (7258)	20000 (9072)	22000 (9979)
(L18) Vortec 8.1L V8 SFI		3.73	4.10
(LBZ) Duramax 6.6L Turbo Diesel V8			3.73

2007 Chevrolet Truck Silverado 2500HD RPO CODES
Classic

Option Code	Description
**2	Seat trim, leather
**C	Seat trim, cloth
**D	Seat trim, Custom Cloth
**V	Seat trim, vinyl
4GK	Tire, spare LT245/75R16 (E) Blackwall 10 Ply on-off road (MSRP with RPO (E63) pickup body = $11.00 with RPO (ZW9) = $ 345.00)
5B5	Power windows and mirrors (MSRP = $738.00) with Regular Cab and Extended Cab Models (MSRP = $815.00) with Crew Cab Models
5G2	Wheels, painted White (MSRP = $45.00)
5G4	Provision for cab roof-mounted lamp (MSRP = $103.00)
5M1	Mirror, exterior, power adjustable, manual folding, non-heated and non-extendable (MSRP = No Charge)
5Q1	Tail Lamp delete (MSRP = -$27.00 Credit)
5V1	Carrier with spare wheel - no tire (MSRP = $82.00)
5X7	Provision for body mounted warning lamp (MSRP = $98.00)Provides an instrument panel mounted switch and heavy duty electrical relay with hook-up terminal in the engine compartment for a body upfitter to connect a body mounted warning or emergency lamp. 40 amp nominal rating.
5Y0	Provision for body mounted lamp with hook-up wiring (MSRP = $88.00)Provides an instrument panel mounted switch and electrical hook-up behind the cab for a body upfitter to connect a body mounted warning or emergency lamp. 21 amp nominal rating.
5Z4	Spare wheel and tire delete (MSRP = -$110.00 Credit)
6C7	Console, roof with reading lamps (MSRP = $55.00)
6P3	Camper Mirrors, power adjustable glass, manual extendable, non-heated (MSRP = $238.00)Alternative mirrors replacing mirrors that are standard with SEO 5B5 Power windows and mirrors on a base decor truck. Right and left hand outside mirrors consisting of 50 square inch flat mirror surface positioned over a 20 square inch convex mirror surface with a common head. Includes turn signals in mirror glass.
7Y9	Battery, Single 770 CCA (MSRP = $56.00)
7Z1	Horn, high note (MSRP = $20.00)
8B0	Batteries, 770 CCA with a 600 CCA auxiliary (MSRP = $190.00)
8C6	Alternator, 145 amp (MSRP = $140.00)
8E9	Bumper, front, painted White (MSRP = $45.00)
8F2	Ornamentation, delete (MSRP = No Charge)Upfitter option.
8G9	Mirrors, outside, convex combination, stainless steel (MSRP = $278.00)
8Q3	Rear seat delete (MSRP = -$375.00 Credit)
8S3	Backup alarm (MSRP = $103.00)97 decibels back-up alarm.
8V2	Jack and tools delete (MSRP = -$32.00 Credit)
8X1	Label, fasten safety belts (MSRP = $2.00)
8X5	Alternators, dual 105 amp (MSRP =$224.00)
9F2	Outside rearview mirror delete (MSRP = -$25.00 Credit)
9F7	Mirrors, outside driver and passenger side West Coast type (MSRP = $125.00)Provides large West Coast style mirrors with spring loaded pre-set feature. Mirrors are Black. Includes cab drillings and mirror assembly shipped loose.
9G1	Mirrors, camper type with convex passenger side mirror head (MSRP = $109.00)
9L3	Spare tire delete (MSRP = -$45.00 Credit)
9L4	Power supply, 12 volt (MSRP = $168.00)
9M4	Decal delete, tailgate (MSRP = No Charge)
9N8	Mirrors, auxiliary dual spot convex, stainless steel (MSRP = $50.00)
9R0	Sound system, ETR AM/FM stereo with cassette (MSRP = $150.00) with Work Truck and

Option Code	Description
	(MSRP = No Charge) with LS or LT1 Decor
9R1	Decal delete, Pickup bed (MSRP = No Charge)
9R3	Sound system, delete (MSRP = No Charge)
9S1	Seats, individual vinyl (MSRP = -$282.00 Credit) on LS Decor and (MSRP = No Charge) on Work Truck Decor
9U3	Seats, individual cloth (MSRP = No Charge) on Regular or Extended Cabs with Work Truck Decor, (MSRP = -$282.00 Credit) on Regular and Extended Cabs with LS Decor, (MSRP = $282.00) on Crew Cabs with Work Truck Decor (MSRP = No Charge) on Crew Cabs with LS Decor
9U4	Remote keyless entry (MSRP = $170.00)
9V5	Paints, solid (MSRP = No Charge), Woodland Green
9V9	Paints, solid (MSRP = No Charge), Doeskin Tan
9W3	Paints, solid (MSRP = No Charge), Wheatland Yellow
9W4	Paints, solid (MSRP = No Charge), Tangier Orange
A28	Window, manual rear-sliding, deep-tinted
A31	Windows, power
A95	Seats, front bucket
AE7	Seats, front 40/20/40 split-bench
AE7	Seats, front 40/20/40 split-bench
AG1	Seat adjuster, driver 6-way power
AG2	Seat adjuster, front passenger 10-way power
AJ1	Glass, Solar-Ray deep-tinted
AN3	Seats, front bucket
AU0	Remote Keyless Entry
AU3	Door locks, power
B30	Floor covering, color-keyed carpeting
B71	Wheel flares
B85	Moldings, bodyside
BG9	Floor covering, Black rubberized-vinyl
BVE	Regular production accessory, Assist steps, chrome plated tubular, stainless steel
BVS	Regular production accessory, Assist steps, Black coated tubular, stainless steel
C42	Air conditioning delete
C49	Defogger, rear-window
C6W	GVWR, 9200 lbs. (4173 kg)
CF5	Sunroof, power
CJ2	Air conditioning, dual-zone automatic climate control
CJ3	Air conditioning, dual-zone manual climate control
D07	Console, floor
DE2	Mirrors, outside manual, Black
DF2	Mirrors, outside high-visibility camper-style, Black
DF5	Mirror, inside rearview auto-dimming
DK7	Console, overhead mini
DK8	Console, overhead deluxe
DL3	Mirrors, outside heated power-adjustable, power-folding and driver-side auto-dimming, Black
DL8	Mirrors, outside heated power-adjustable, Black
DNH	Regular production accessory, Underseat storage
DPN	Mirrors, outside heated power-adjustable vertical camper
E63	Pickup box, Fleetside

Option Code	Description
E95	Regular production accessory, Tonneau cover, Black, soft
EN6	Regular production accessory, Tonneau cover, Black, hard, folding, lockable
FE9	Emissions, Federal requirements
G80	Differential, heavy-duty automatic locking rear
GT4	Rear axle, 3.73 ratio
GT5	Rear axle, 4.10 ratio
K05	Engine block heater
K34	Cruise control
K47	Air cleaner, high-capacity
K68	Alternator, 105 amps
KC4	Cooling, external engine oil cooler
KG3	Alternator, 145 amps
KL5	Alternative fuel conversions, conversion-ready engine
KNP	Cooling, auxiliary external transmission oil cooler
L18	Engine, Vortec 8.1L V8 SFI
LBZ	Engine, Duramax 6.6L Turbo Diesel V8
LQ4	Engine, Vortec 6.0L V8 SFI
MT1	Transmission, 4-speed automatic, heavy-duty
MW3	Transmission, 5-speed manual
MW7	Transmission, Allison 1000 6-speed automatic
NB8	Emissions override
NC7	Emissions override, Federal
NE1	Emissions, Maine, Massachusetts, New York or Vermont state requirements
NP1	Transfer case, electronic shift
NP2	Transfer case, floor-mounted shifter
NP5	Steering wheel, leather-wrapped, Black
NZZ	Skid Plate Package
PDB	OnStar Plus Package
PDN	Heavy-Duty Power Package
PPB	Regular production accessory, Pickup bed extender, brushed aluminum
PUB	Regular production accessory, Pickup bed protectors, Top side rails, Black molded
PY0	Wheels, 4 - 16" x 6.5" (40.6 cm x 16.5 cm) 8-lug polished forged aluminum
PY2	Wheels, 4 - 16" x 6.5" (40.6 cm x 16.5 cm) 8-lug chrome-styled steel
QIW	Tires, LT245/75R16E on-/off-road, blackwall
QIZ	Tires, LT245/75R16E all-season, blackwall
R6Q	OnStar Plus Package discount not desired
R6Y	Heavy-Duty Power Package discount not desired
R8G	OnStar 1 Additional Year of Safe and Sound Service (MSRP= $199)
R8P	OnStar 2 Additional Years of Safe and Sound Service (MSRP=$379)
R8U	OnStar 3-Years Safe and Sound Service (MSRP=$679)
R8V	OnStar 3-Years Directions and Connections Service (MSRP=$979)
R8W	OnStar 1-Year Directions and Connections Service (MSRP=$100)
R8Y	OnStar 2-Years Directions and Connections Service (MSRP=$399)
R8Z	OnStar 3-Years Directions and Connections Service (MSRP=$679)
RFA	OnStar 1-Year Business Vehicle Manager Service (MSRP=$25)
RFB	OnStar 2-Years Business Vehicle Manager Service (No charge)
RFC	OnStar 3-Years Business Vehicle Manager Service (No Charge)
SAF	Spare tire lock
T96	Fog lamps, front

Option Code	Description
TGK	Solid PaintSEO solid paint, one color
TP2	Battery, auxiliary heavy-duty 600 cold-cranking amps
TQ3	Battery, heavy-duty dual 770 cold-cranking amps
TR3	Grille, color-keyed surround with chrome accent bar
U01	Lamps, Amber roof marker
U2K	XM Satellite Radio
U42	Entertainment system, rear seat DVD player
UB0	Audio system, AM/FM stereo with CD player
UC6	Audio system, AM/FM stereo with 6-disc CD changer
UE1	OnStar, 1-year of Safe and Sound plan
UG1	Universal Home Remote
UK3	Steering wheel controls, mounted audio and Driver Information Center controls
UK6	Audio system controls, rear
UM7	Audio system, AM/FM stereo
UQ3	Audio system feature, speaker system
UQ5	Audio system feature, 4-speaker system
UQ7	Audio system feature, Bose premium speaker system
UY2	Trailering wiring provisions, for camper, fifth wheel and gooseneck trailer
V10	Covers, radiator grille and front bumper openings
V43	Bumper, rear painted
V76	Recovery hooks, front, frame-mounted
VAB	Ship Thru for Models C*25**3 (MSRP = $165.00)Produced in Pontiac Assembly and shipped to NBC Truck Equipment
VAL	Ship Thru for TDM Vehicle Management (MSRP = $310.00)
VAY	Ship Thru for Models C*25**3 (MSRP = $165.00)Produced in Pontiac Assembly and shipped to K&B Mounting
VB3	Bumper, rear chrome
VBK	Ship Thru for Models C*25**3 (MSRP = $270.00)Produced in Pontiac Assembly and shipped to Ft. Wayne Fleet Equipment
VCB	Ship Thru for Models C*25*43 (MSRP = $120.00)Produced in Flint Assembly and shipped to Monroe Truck Equipment
VF7	Bumper, rear delete
VFI	Ship Thru for TDM Vehicle Management (MSRP = $165.00)
VFW	Ship Thru for Models C*25*43 (MSRP = $255.00)Produced in Flint Assembly and shipped to NBC Truck Equipment
VG3	Bumper, front chrome with Gray lower
VGH	Ship Thru for Models C*25**3 (MSRP = $160.00)Produced in Pontiac Assembly and shipped to Monroe Truck Equipment
VGZ	Ship Thru for Models C*25**3 (MSRP = $165.00)Produced in Pontiac Assembly and shipped to Canfield
VSQ	Ship Thru for Models C*25*43 (MSRP = $270.00)Produced in Flint Assembly and shipped to Monroe Truck Equipment
VUD	Ship Thru for Models C*25*43 (MSRP = $120.00)Produced in Flint Assembly and shipped to Knapheide Truck Equipment
VUI	Ship Thru for Models C*25*43 (MSRP = $295.00)Produced in Flint Assembly and shipped to Ft. Wayne Fleet Equipment
VUM	Ship Thru for Models C*25*43 (MSRP = $375.00)Produced in Flint Assembly and shipped to Buckeye Truck Equipment
VWS	Ship Thru for Models C*25**3 (MSRP = $310.00)Produced in Pontiac Assembly and shipped to Buckeye Truck Equipment

Option Code	Description
VYC	Ship Thru for Models C*25**3 (MSRP = $160.00)Produced in Pontiac Assembly and shipped to Knapheide Truck Equipment
VYS	Ship Thru for Models C*25**3 (MSRP = $165.00)Produced in Pontiac Assembly and shipped to Masterack Truck Equipment
VYU	Snow Plow Prep Package
YF5	Emissions, California state requirements
Z82	Trailering equipment, heavy-duty
Z85	Suspension Package, Handling/Trailering, heavy-duty
ZHH	Tire, spare LT245/75R16E all-season, blackwall
ZW9	Pickup box, delete
ZY1	Paint, solid

Updates for Silverado 2500HD Classic

Week of 7/17/2006

Effective 7/17/2006, the following changes will be made to the Vehicle Order Guide:

- Interior section-Air bags, frontal, changed footnote #1 to read "Regular and Extended Cab models includes passenger-side deactivation switch. Never place a rear-facing infant restraint in the front seat of any vehicle equipped with an active frontal air bag. Always use safety belts and the correct child restraints for your child's age and size. Children are safer when properly secured in a rear seat. See the vehicle's Owner's Manual and child safety seat instructions for more safety information.".

Week of 7/10/2006

Effective 7/10/2006, the following changes will be made to the Vehicle Order Guide:

- SEO Ship Thru section- (5B5) Power windows and mirrors, Updated extended description to read "Provides power driver and passenger windows on a base trim level, includes SEO (5M1) LH and RH outside power adjustable, manual folding, non-heated, non-extendable mirrors and up level door panels. The mirror head is the same size and configuration as the base power mirror on LT Décor." Updated restriction to read "Requires RPO (AU3) power programmable door locks. Power mirrors can be upgraded to SEO (6P3) remote control, power-extendable camper mirrors.".
- SEO Ship Thru section- (5M1) Updated main description to read "Mirror, exterior, power adjustable, manual folding, non-heated and non-extendable". Added extended description to read "Provides the left and right hand side outside power adjustable, manual folding, non-heated, non-extendable, rear view mirrors that are included with SEO (5B5) Power windows and mirrors. Mirror head is the same size and configuration as the base mirror supplied on first tire Uplevel Décors except that the mirror head is not heated and not extendable.".

Week of 6/19/2006

Effective 6/19/2006, the following changes will be made to the Vehicle Order Guide:

- All sections-Removed the word "Federal" anywhere it used to say "Requires a Fleet or Federal Government order type.
- All sections-removed the hundred designation (ex: 5300) from all engine descriptions and replaced it with liters designation (ex: 5.3L). Please review entire order guide to see where it changed.

Week of 6/5/2006

Effective 6/5/2006, the following changes will be made to the Vehicle Order Guide:

- Interior section-(U42) Entertainment system, changed symbol from "A2" to "A1" in 3LT column. Also, deleted footnote #2 entirely.

Week of 5/29/2006

Effective 5/29/2006, the following changes will be made to the Vehicle Order Guide:

- Mechanical section-(VYU) Snow Plow Prep Package, changed extended description to read "includes 10-amp power for backup and roof emergency light, (KG3) 145-amp alternator, high-flow front bumper, forward lamp wiring harness, 1.65" (42 mm) access hole with grommet in front of dash panel, roof beacon lamp provisions with switch on the instrument panel, instrument panel jumper wiring harness for electric trailer brake controller, (K47) high-capacity air cleaner and (NZZ) Skid Plate Package".
- SEO Ship Thru section-(VGR) Ship Thru for Models C*25903 and C*25953 (MSRP = $505.00) Produced in Pontiac Assembly and shipped to OEM Systems (in Centreville, IL) and onto Wentzville Assembly Center, Delete Option Entirely.

Week of 5/22/2006

Effective 5/22/2006, the following changes will be made to the Vehicle Order Guide:

- OnStar Fleet Options section-please review entire section as many changes have been made.

Week of 5/15/2006

Effective 5/15/2006, the following changes will be made to the Vehicle Order Guide:

- SEO Ship Thru section-(VAL) Ship Thru for TDM Vehicle Management, updated price to "(MSRP = $210.00)".
- SEO Ship Thru section-(VFI) Ship Thru for TDM Vehicle Management, updated price to "(MSRP = $140.00)".
- SEO Ship Thru section-(VGR) Ship Thru for Models C*25903 and C*25953, updated price to "(MSRP = $505.00)".

Week of 5/1/2006

Effective 5/1/2006, the following changes will be made to the Vehicle Order Guide:

- Interior section-(DNH) Regular production accessory, Underseat storage, changed footnote to read "Requires Extended Cab models. For additional GM Accessory Offerings and Installation, please contact your local GM Accessory Distributor Installer (ADI).".
- Exterior section-Deleted (EM7) Off-Road Enhanced Mobility Package entirely from Order Guide.
- Exterior section-(BVE) Regular production accessory, Assist steps, chrome plated tubular, changed footnote #1 to read "Not available with (ZW9) pickup box delete. For additional GM Accessory Offerings and Installation, please contact your local GM Accessory Distributor Installer (ADI).".
- Exterior section-(BVS) Regular production accessory, Assist steps, Black coated tubular, changed footnote #1 to read "Not available with (ZW9) pickup box delete. For additional GM Accessory Offerings and Installation, please contact your local GM Accessory Distributor Installer (ADI).".
- Exterior section-(PPB) Regular production accessory, Pickup bed extender, brushed aluminum, changed footnote #1 to read "Not available with (ZW9) pickup box delete. For additional GM Accessory Offerings and Installation, please contact your local GM Accessory Distributor Installer (ADI).".
- Exterior section-(PUB) Regular production accessory, Pickup bed protectors, Top side rails, changed footnote to read "Not available with (ZW9) pickup box delete, (E95) Regular production accessory, soft, Black tonneau cover, or (EN6) Regular production accessory, hard, Black tonneau cover. For additional GM Accessory Offerings and Installation, please contact your local GM Accessory Distributor Installer (ADI).".
- Exterior section-(E95) Regular production accessory, Tonneau cover, Black, soft, changed footnote to read "Not available with (PUB) Regular production accessory, top side rail, Black-molded, pickup bed protectors or (ZW9) pickup box delete. For additional GM Accessory Offerings and Installation, please contact your local GM Accessory Distributor Installer (ADI).".
- Exterior section-(EN6) Regular production accessory, Tonneau cover, Black, hard, changed footnote to read "Not available with (PUB) Regular production accessory, top side rail, Black-molded, pickup bed protectors or (ZW9) pickup box delete. For additional GM Accessory Offerings and Installation, please contact your local GM Accessory Distributor Installer (ADI).".
- Exterior section-Deleted (P15) Tire carrier, inside spare, in cab entirely from Order Guide.

Week of 4/24/2006

Effective 4/24/2006, the following changes will be made to the Vehicle Order Guide:

- Interior section-(CJ3) Air conditioning, dual-zone manual climate control, changed symbol from "A1" to "S" in 1WT column. Also, changed footnote #1 to read "Required and only available when (VYU) Snow Plow Prep Package is ordered.". Also, changed symbol from "A2" to "A1" on 2LT and 3LT columns. Also, deleted footnote #2 entirely.
- Interior section-(C42) Air conditioning delete, changed symbol from "S1" to "A1". Also moved RPO from Reference Only column to Free Flow column.
- Interior section-(U2K) XM Satellite Radio, changed extended description to read " With a wide variety of programming, XM has something to excite any driver. Whether you want to be entertained or informed, to laugh, think, or sing, XM has the perfect channel for you - coast-to-coast, and in digital-quality sound. 3 trial months - no obligation". Also, changed footnote to read "Available in the 48 contiguous United States. Required $12.95 monthly subscription sold separately. All fees and programming subject to change. Subscription subject to customer agreement. For more information, visit gm.xmradio.com.".

Week of 4/17/2006

Effective 4/17/2006, the following changes will be made to the Vehicle Order Guide:

- Interior section-(UC6) Audio system, AM/FM stereo with 6-disc CD changer, changed extended description to read " seek-and-scan, digital clock, auto-tone control, Radio Data System (RDS), speed-compensated volume, and TheftLock". Also, changed symbol from "A1" to "A" in 1LT column and deleted footnote #1 entirely.

Week of 4/3/2006

Effective 4/3/2006, the following changes will be made to the Vehicle Order Guide:

- Interior section-(CJ3) Air conditioning, dual-zone manual climate control, changed symbol from "S" to "A1" in 1WT column. Also, changed footnote #1 to read "Standard on Extended and Crew Cab Models.". Also, added footnote #2 that reads "Required and only available when (VYU) Snow Plow Prep Package is ordered." and applies to 2LT and 3LT columns.
- Interior section-(C42) Air conditioning delete, changed symbol from "A1" to "S1". Also moved RPO from Free Flow column to Reference only column.

2007 Chevrolet Truck Silverado 3500 STANDARD EQUIPMENT
Classic

S = Standard Equipment A = Available -- (dashes) = Not Available D = ADI Available

■ = Included in Equipment Group □ = Included in Equipment Group but upgradeable

*Indicates availability of feature on multiple models. For example, it indicates feature availability on 2WD and 4WD Models or Rear wheel drive and All-wheel drive Models.

Codes listed in the shaded column titled Ref. Only RPO Code are for internal use only and should not be ordered.

Free Flow RPO Code	Ref. Only RPO Code	Description 1 - Equipment groups 1WT, 1LS and 1LT available on C*35903, C*35953, and C*35943 Models. 2 - Equipment group 2LT and 3LT available on C*35953 and C*35943 Models.	Reg., Ext. and Crew Cab			Ext. and Crew Cab	
			Work Truck 1WT[1]	LS 1LS[1]	LT1 1LT[1]	LT2 2LT[2]	LT3 3LT[2]
		Air bags, frontal, driver and right-front passenger 1 - Regular and Extended Cab models includes passenger-side deactivation switch. Never place a rear-facing infant restraint in the front seat of any vehicle equipped with an active frontal air bag. Always use safety belts and the correct child restraints for your child's age and size. Children are safer when properly secured in a rear seat. See the vehicle's Owner's Manual and child safety seat instructions for more safety information.	S[1]	S[1]	S[1]	S[1]	S[1]
CJ3		**Air conditioning**, dual-zone manual climate control with individual climate settings for driver and right-front passenger 1 - Required and only available when (VYU) Snow Plow Prep Package is selected.	S	S	S	A[1]	A[1]
		Assist handle, front passenger 1 - Also includes rear outboard passenger assist handle on Extended and Crew Cab models.	S[1]	S[1]	S[1]	S[1]	S[1]
	UM7	**Audio system**, AM/FM stereo with seek-and-scan and digital clock	S	--	--	--	--
	UQ5	**Audio system feature**, 4-speaker system	S	S	--	--	--
		Cigarette lighter, on instrument panel	S	S	S	S	S
		Coat hook, driver-side rear 1 - Also includes passenger-side coat hook on Extended and Crew Cab models.	S[1]	S[1]	S[1]	S[1]	S[1]
		Cup holders, front 1 - Also includes rear cupholders on Extended and Crew Cab models.	S[1]	S[1]	S[1]	S[1]	S[1]
		Driver Information Center that monitors numerous different systems depending on vehicle equipment	S	S	S	S	S
BG9		**Floor covering**, Black rubberized-vinyl 1 - Not available with (922) Medium Gray leather seating surfaces.	S	S	A[1]	--	--
		Instrumentation, analog with speedometer, odometer with trip odometer, fuel level, voltmeter, engine temperature, oil pressure and tachometer	S	S	S	S	S
		Lighting, interior with dome and reading lights, backlit instrument panel switches and door handle-activated illuminated entry	S	S	S	S	S
		Mirror, inside rearview manual day/night	S	S	--	--	--
		Power outlets, 2 auxiliary instrument panel-mounted with covers, 12-volt	S	S	S	S	S
	*V	**Seat trim**, vinyl	S	A	--	--	--

2007 Chevrolet Truck Silverado 3500 STANDARD EQUIPMENT
Classic

Free Flow RPO Code	Ref. Only RPO Code	Description 1 - Equipment groups 1WT, 1LS and 1LT available on C*35903, C*35953, and C*35943 Models. 2 - Equipment group 2LT and 3LT available on C*35953 and C*35943 Models.	Reg., Ext. and Crew Cab			Ext. and Crew Cab	
			Work Truck 1WT[1]	LS 1LS[1]	LT1 1LT[1]	LT2 2LT[2]	LT3 3LT[2]
AE7		**Seats**, front 40/20/40 split-bench, 3-passenger, driver and front passenger manual reclining with outboard head restraints	S	A	--	--	--
		Seats, rear 60/40 split-bench, 3-passenger, flat-folding (includes child seat top tether anchor) 1 - Not available with Regular Cab models.	S[1]	S[1]	S[1]	S	S
		Steering column, Tilt-Wheel, adjustable with brake/transmission shift interlock	S	S	S	S	S
		Steering wheel, includes theft-deterrent locking feature	S	S	--	--	--
		Theft-deterrent system, PASSlock II	S	S	S	S	S
		Tools, mechanical jack and wheel wrench located in back of cab	S	S	S	S	S
		Visors, driver and front passenger, padded with cloth trim, extenders, pocket on driver-side and vanity mirror on passenger-side, Shale-colored	S	S	S	S	S
		Warning tones, headlamp on, key-in-ignition, driver and passenger buckle up reminder and turn signal on	S	S	S	S	S
		Windows, swing-out rear quarter 1 - Standard with Extended Cab models only.	S[1]	S[1]	S[1]	S[1]	S[1]
		Air dam, Gray	S	S	S	S	S
	VG3	**Bumper**, front chrome with Gray lower	S	S	S	S	S
	V43	**Bumper**, rear painted, step-style with pad 1 - Not available with (ZW9) pickup box delete.	S[1]	--	--	--	--
		Daytime Running Lamps, with automatic exterior lamp control	S	S	S	S	S
		Glass, Solar-Ray light-tinted, all windows	S	S	--	--	--
	TR3	**Grille**, color-keyed surround with chrome accent bar	S	S	S	S	S
		Headlamps, dual halogen composite with automatic exterior lamp control and flash-to-pass feature	S	S	S	S	S
		Lamps, dual cargo area lamps	S	S	S	S	S
	D44	**Mirrors**, outside manual, Black, manual-folding 1 - Standard on (C7W) 11,400 lbs. (5171 kg) GVWR only. Not available with (C6Y) 9600 lbs. (4354 kg) GVWR, (GEC) 9800 lbs. (4445 kg) GVWR or (C4M) 9900 lbs. (4491 kg) GVWR.	S[1]	S[1]	--	--	--
	DE2	**Mirrors**, outside manual, Black, manual-folding 1 - Standard on (C6Y) 9600 lbs. (4354 kg) GVWR, (GEC) 9800 lbs. (4445 kg) GVWR or (C4M) 9900 lbs. (4491 kg) GVWR. Not available with (C7W) 11,400 lbs. (5171 kg) GVWR.	S[1]	S[1]	--	--	--
	ZY1	**Paint**, solid	S	S	S	S	S
	E63	**Pickup box**, Fleetside 1 - Not available with CC35903 models.	S[1]	S[1]	S[1]	S	S
	V76	**Recovery hooks**, front, frame-mounted	S	S	S	S	S

2007 Chevrolet Truck Silverado 3500 STANDARD EQUIPMENT
Classic

Free Flow RPO Code	Ref. Only RPO Code	Description 1 - Equipment groups 1WT, 1LS and 1LT available on C*35903, C*35953, and C*35943 Models. 2 - Equipment group 2LT and 3LT available on C*35953 and C*35943 Models.	Reg., Ext. and Crew Cab			Ext. and Crew Cab	
			Work Truck 1WT[1]	LS 1LS[1]	LT1 1LT[1]	LT2 2LT[2]	LT3 3LT[2]
	QER	Tires, LT265/75R16E on-/off-road, blackwall 1 - Requires CC35903 models, CK35903 and (C4M) 9900 lbs. (4491 kg) GVWR, C*35943 and (C4M) 9900 lbs. (4491 kg) GVWR or CC35953 models and (GEC) 9800 lbs. (4445 kg) GVWR or (C4M) 9900 lbs. (4491 kg) GVWR or CK35953 models and (C4M) 9900 lbs. (4491 kg) GVWR. Includes 5 tires with (E63) Fleetside pickup box. Includes 4 tires with (ZW9) pickup box delete. 2 - Requires C*35943 and (C4M) 9900 lbs. (4491 kg) GVWR or CK35953 models and (C4M) 9900 lbs. (4491 kg) GVWR or CC35953 models and (GEC) 9800 lbs. (4445 kg) GVWR or (C4M) 9900 lbs. (4491 kg) GVWR. Includes 5 tires with (E63) Fleetside pickup box. Includes 4 tires with (ZW9) pickup box delete.	S[1]	S[1]	S[1]	S[2]	S[2]
		Tire carrier, outside spare, winch-type mounted under frame at rear	S	S	S	S	S
		Single rear wheels 1 - Standard on (C6Y) 9600 lbs. (4354 kg) GVWR, (GEC) 9800 lbs. (4445 kg) GVWR or (C4M) 9900 lbs. (4491 kg) GVWR. Not available with (C7W) 11,400 lbs. (5171 kg) GVWR.	S[1]	S[1]	S[1]	S[1]	S[1]
		Dual rear wheels 1 - Standard on (C7W) 11,400 lbs. (5171 kg) GVWR only. Not available with (C6Y) 9600 lbs. (4354 kg) GVWR, (GEC) 9800 lbs. (4445 kg) GVWR or (C4M) 9900 lbs. (4491 kg) GVWR.	S[1]	S[1]	S[1]	S[1]	S[1]
		Wheels, 6 - 16" x 6.5" (40.6 cm x 16.5 cm) 8-lug painted steel (dual rear), includes painted center caps and steel spare 1 - Requires and only available with (C7W) 11,400 lbs. (5171 kg) GVWR (dual rear wheel)	S[1]	--	--	--	--
	QC1	Wheels, 4 - 16" x 7.0" (40.6 cm x 17.8 cm) 8-lug steel (single rear wheel) 1 - Center cap is Argent. Standard with (C6Y) 9600 lbs. (4354 kg) GVWR, (GEC) 9800 lbs. (4445 kg) GVWR or (C4M) 9900 lbs. (4491 kg) GVWR. 2 - Center cap is chrome. Standard with (C6Y) 9600 lbs. (4354 kg) GVWR, (GEC) 9800 lbs. (4445 kg) GVWR or (C4M) 9900 lbs. (4491 kg) GVWR.	S[1]	S[1]	S[2]	S[2]	S[2]
	B71	Wheel flares, front only 1 - With (GEC) 9800 lbs. (4445 kg) GVWR or (C4M) 9900 lbs. (4491 kg) GVWR includes rear wheel flares unless (ZW9) pickup box delete is ordered.	S[1]	S[1]	S[1]	S[1]	S[1]
		Wipers, front intermittent wet-arm with pulse washers	S	S	S	S	S
	K68	Alternator, 105 amps 1 - Not available with (VYU) Snow Plow Prep Package.	S[1]	S[1]	S[1]	S[1]	S[1]
		Battery, heavy-duty 600 cold-cranking amps, maintenance-free with rundown protection and retained accessory power 1 - Not standard with (LBZ) Duramax 6.6L Turbo Diesel V8 engine.	S[1]	S[1]	S[1]	S[1]	S[1]
		Brakes, 4-wheel antilock, 4-wheel disc	S	S	S	S	S
	KC4	Cooling, external engine oil cooler, heavy-duty air-to-oil, integral to driver-side of radiator tank	S	S	S	S	S
	LQ4	Engine, Vortec 6.0L V8 SFI (300 hp [223.8 kW] @ 4400 rpm, 360 lb-ft of torque [486.6 N-m] @ 4000 rpm)	S	S	S	S	S
		Exhaust, aluminized stainless-steel muffler and tailpipe	S	S	S	S	S

2007 Chevrolet Truck Silverado 3500 STANDARD EQUIPMENT
Classic

Free Flow RPO Code	Ref. Only RPO Code	Description 1 - Equipment groups 1WT, 1LS and 1LT available on C*35903, C*35953, and C*35943 Models. 2 - Equipment group 2LT and 3LT available on C*35953 and C*35943 Models.	Reg., Ext. and Crew Cab			Ext. and Crew Cab	
			Work Truck 1WT[1]	LS 1LS[1]	LT1 1LT[1]	LT2 2LT[2]	LT3 3LT[2]
		Frame, hydroformed ladder-type	S	S	S	S	S
	C6Y	GVWR, 9600 lbs. (4354 kg) with single rear wheels 1 - Requires CC35903 models.	S[1]	S[1]	S[1]	--	--
	GT5	Rear axle, 4.10 ratio 1 - Refer to Engine/Axle Chart for availability.	S[1]	S[1]	S[1]	S[1]	S[1]
		Steering, power	S	S	S	S	S
		Suspension, front independent with torsion bar and stabilizer bar	S	S	S	S	S
		Suspension, rear 3-stage springs	S	S	S	S	S
	Z85	Suspension Package, Handling/Trailering, heavy-duty, includes 36 mm piston monotube shocks	S	S	S	S	S
	NP2	Transfer case, floor-mounted shifter 1 - Standard with 4x4 models. Requires (AE7) front 40/20/40 split-bench seat.	S[1]	S[1]	S[1]	--	--
	MW3	Transmission, 5-speed manual with overdrive 1 - Requires (LQ4) Vortec 6.0L V8 SFI engine. Not available with (C6Y) 9600 lbs. (4354 kg) GVWR, (GEC) 9800 lbs. (4445 kg) GVWR or (C4M) 9900 lbs. (4491 kg) GVWR.	S[1]	S[1]	S[1]	--	--

2007 Chevrolet Truck Silverado 3500 EQUIPMENT GROUPS
Classic

S = Standard Equipment A = Available – (dashes) = Not Available D = ADI Available
■ = Included in Equipment Group □ = Included in Equipment Group but upgradeable

No deletions allowed to Equipment Groups. Additional options may be added; check ordering information section for compatibility.

*Indicates availability of feature on multiple models. For example, it indicates feature availability on 2WD and 4WD Models or Rear wheel drive and All-wheel drive Models.

Codes listed in the shaded column titled Ref. Only RPO Code are for internal use only and should not be ordered.

Free Flow RPO Code	Ref. Only RPO Code	Description 1 - Equipment groups 1WT, 1LS and 1LT available on C*35903, C*35953, and C*35943 Models. 2 - Equipment group 2LT and 3LT available on C*35953 and C*35943 Models.	Reg., Ext. and Crew Cab			Ext. and Crew Cab	
			Work Truck 1WT[1]	LS 1LS[1]	LT1 1LT[1]	LT2 2LT[2]	LT3 3LT[2]
CJ2		**Air conditioning**, dual-zone automatic climate control with individual climate settings for driver and right-front passenger **1 - Requires Extended or Crew Cab models. Not available with (VYU) Snow Plow Prep Package.** **2 - Must be substituted with (CJ3) dual-zone manual air conditioning when (VYU) Snow Plow Prep Package is ordered.**	--	--	A[1]	□[2]	□[2]
UB0		**Audio system**, AM/FM stereo with CD player, seek-and-scan, digital clock, auto-tone control, Radio Data System (RDS) and speed-compensated volume **1 - Upgradeable to (UC6) AM/FM stereo with 6-disc in-dash CD changer.**	A	■	□[1]	□[1]	--
UC6		**Audio system**, AM/FM stereo with 6-disc CD changer, seek-and-scan, digital clock, auto-tone control, Radio Data System (RDS), speed-compensated volume and TheftLock	--	--	A	A	■
	UQ3	**Audio system feature**, speaker system **1 - Includes 4 speakers on Regular Cab and 6 speakers on Extended and Crew Cab Models.**	--	--	■[1]	--	--
	UQ7	**Audio system feature**, Bose premium speaker system with sub-woofer in center console **1 - Included and only available with (A95) front reclining bucket seats.**	--	--	A[1]	■	■
	UK6	**Audio system controls**, rear with 2 headphone jacks (headphones not included), power outlet and controls for volume, station selection and media **1 - Requires Crew Cab Models. Included and only available with (A95) front reclining bucket seats.** **2 - Requires Crew Cab models.**	--	--	A[1]	■[2]	■[2]
	D07	**Console**, floor with storage compartment and dual cup holders **1 - Included and only available with (A95) front reclining bucket seats.**	--	--	A[1]	■	■
	DK7	**Console**, overhead mini with map lights **1 - Not available with (CF5) power sunroof.**	--	--	■	■[1]	■[1]
K34		**Cruise control**, electronic with set and resume speed	A	■	■	■	■
C49		**Defogger**, rear-window electric **1 - Not available with (A28) sliding rear window or (C42) air conditioning delete. Available with Fleet and Government order types only.** **2 - Not available with (A28) sliding rear window.**	A[1]	■[2]	■[2]	■[2]	■[2]

2007 Chevrolet Truck Silverado 3500 EQUIPMENT GROUPS
Classic

Free Flow RPO Code	Ref. Only RPO Code	Description 1 - Equipment groups 1WT, 1LS and 1LT available on C*35903, C*35953, and C*35943 Models. 2 - Equipment group 2LT and 3LT available on C*35953 and C*35943 Models.	Reg., Ext. and Crew Cab			Ext. and Crew Cab	
			Work Truck 1WT[1]	LS 1LS[1]	LT1 1LT[1]	LT2 2LT[2]	LT3 3LT[2]
AU3		**Door locks**, power **1 - Available with Fleet and Government order types only.**	A[1]	A	■	■	■
B30		**Floor covering**, color-keyed carpeting with rubberized vinyl floor mats **1 - Available with Fleet and Government order types only. Not available with (**V) vinyl seat trim.** **2 - Not available with (**V) vinyl interior trim.** **3 - May be substituted with (BG9) rubberized-vinyl floor covering. Not available with (**V) vinyl seat trim.**	A[1]	A[2]	□[3]	■	■
	DF5	**Mirror**, inside rearview auto-dimming with 8-point compass and outside temperature display	--	--	■	■	■
	AU0	**Remote Keyless Entry**, with 2 transmitters, panic button and content theft alarm	--	--	■	■	■
	**D	**Seat trim**, Custom Cloth	A	■	■	■	--
	**2	**Seat trim**, leather **1 - Not available on Regular Cab models. Extended Cab includes front leather seating surfaces with rear vinyl bench. Crew Cab includes front and rear leather-appointed seating surfaces.**	--	--	A[1]	A[1]	■[1]
AE7		**Seats**, front 40/20/40 split-bench, 3-passenger, driver and front passenger manual reclining, center fold-down armrest with storage, adjustable outboard head restraints and storage pockets on Extended Cab models **1 - Requires (**D) Custom Cloth seat trim.**	A[1]	■[1]	■	--	--
A95		**Seats**, front bucket, includes (AG1) 6-way power driver seat adjuster, front passenger manual recline, adjustable outboard head restraints, inboard armrests and storage pockets **1 - Requires Extended or Crew Cab Models. Requires Fleet and Government order types only. Includes (D07) floor console and (UQ7) Bose Premium speaker system. Also includes (UK6) rear audio controls on Crew Cab Models. On 4WD Models, also requires (NP1) electronic shift transfer case.**	--	--	A[1]	■	--
	AN3	**Seats**, front bucket, includes 10-way power driver and front passenger seat adjusters, 2-way power lumbar control, heated seat cushions and seatbacks, 2-position driver memory, adjustable outboard head restraints, floor console, dual inboard armrests and storage pockets	--	--	--	--	■
AG1		**Seat adjuster**, driver 6-way power **1 - Included with (**2) Seat trim, leather on Extended and Crew Cab Models. Included with (A95) front reclining bucket seats.** **2 - With (AN3) front full-feature bucket seats, includes 10-way power seat adjusters.**	--	--	A[1]	■	■[2]
	AG2	**Seat adjuster**, front passenger 10-way power **1 - Included and only available with (AN3) front full-feature bucket seats.**	--	--	--	--	■[1]
	NP5	**Steering wheel**, leather-wrapped, Black with theft-deterrent locking feature	--	--	■	■	■

2007 Chevrolet Truck Silverado 3500 EQUIPMENT GROUPS
Classic

Free Flow RPO Code	Ref. Only RPO Code	Description 1 - Equipment groups 1WT, 1LS and 1LT available on C*35903, C*35953, and C*35943 Models. 2 - Equipment group 2LT and 3LT available on C*35953 and C*35943 Models.	Reg., Ext. and Crew Cab			Ext. and Crew Cab	
			Work Truck 1WT[1]	LS 1LS[1]	LT1 1LT[1]	LT2 2LT[1]	LT3 3LT[2]
UK3		**Steering wheel controls**, mounted audio and Driver Information Center controls which provides access to enhanced Driver Information Center features and information	--	--	A	■	■
	A31	**Windows**, power with driver and front passenger Express-Down	--	--	■	■	■
VB3		**Bumper**, rear chrome, step-style with pad 1 - Not available with (ZW9) pickup box delete.	A[1]	■[1]	■[1]	■[1]	■[1]
T96		**Fog lamps**, front, halogen 1 - With 2WD models requires (V76) front frame-mounted recovery hooks.	--	--	A[1]	■	■
AJ1		**Glass**, Solar-Ray deep-tinted (all windows except light-tinted glass on windshield and driver- and front passenger-side glass) 1 - With Extended Cab models, includes rear window and rear quarter windows. With (C49) rear-window defogger, includes light-tinted rear window.	A[1]	A[1]	■[1]	■[1]	■[1]
	DL8	**Mirrors**, outside heated power-adjustable, Black, manual-folding 1 - Upgradeable to (DL3) outside heated, power-adjustable, power-folding mirrors (C6Y) 9600 lbs. (4354 kg) GVWR, (GEC) 9800 lbs. (4445 kg) GVWR, or (C4M) 9900 lbs. (4491 kg) GVWR is ordered or (DPN) outside vertical camper mirrors.	--	--	□[1]	□[1]	□[1]
	P06	**Wheels**, 6 - 16" x 6.5" (40.6 cm x 16.5 cm) 8-lug steel, with bright metal rings, chrome center caps and steel spare 1 - Requires and only available with (C7W) 11,400 lbs. (5171 kg) GVWR (dual rear wheel)	--	■[1]	■[1]	■[1]	■[1]
NP1		**Transfer case**, electronic shift with push-button controls 1 - Requires 4x4 models. Requires (MT1) heavy-duty 4-speed automatic transmission or (MW7) Allison 1000 6-speed automatic transmission.	--	--	A[1]	■[1]	■[1]
MT1		**Transmission**, 4-speed automatic, heavy-duty, electronically controlled with overdrive and tow/haul mode. Includes (KNP) external transmission oil cooler 1 - Requires (LQ4) Vortec 6.0L V8 SFI engine. Standard on (C6Y) 9600 lbs. (4354 kg) GVWR, (GEC) 9800 lbs. (4445 kg) GVWR or (C4M) 9900 lbs. (4491 kg) GVWR. 2 - Requires (LQ4) Vortec 6.0L V8 SFI engine.	A[1]	A[1]	A[1]	■[2]	■[2]

2007 Chevrolet Truck Silverado 3500 EQUIPMENT GROUPS
Classic

S = Standard Equipment A = Available -- (dashes) = Not Available D = ADI Available
■ = Included in Equipment Group □ = Included in Equipment Group but upgradeable

No deletions allowed to Equipment Groups. Additional options may be added; check ordering information section for compatibility.

*Indicates availability of feature on multiple models. For example, it indicates feature availability on 2WD and 4WD Models or Rear wheel drive and All-wheel drive Models.

Codes listed in the shaded column titled Ref. Only RPO Code are for internal use only and should not be ordered.

Free Flow RPO Code	Ref. Only RPO Code	Description 1 - Equipment groups 1WT, 1LS and 1LT available on C*35903, C*35953, and C*35943 Models. 2 - Equipment group 2LT and 3LT available on C*35953 and C*35943 Models.	Reg., Ext. and Crew Cab			Ext. and Crew Cab	
			Work Truck 1WT[1]	LS 1LS[1]	LT1 1LT[1]	LT2 2LT[2]	LT3 3LT[2]
CJ2		**Air conditioning**, dual-zone automatic climate control with individual climate settings for driver and right-front passenger 1 - Requires Extended or Crew Cab models. Not available with (VYU) Snow Plow Prep Package. 2 - Must be substituted with (CJ3) dual-zone manual air conditioning when (VYU) Snow Plow Prep Package is ordered.	--	--	A[1]	□[2]	□[2]
UB0		**Audio system**, AM/FM stereo with CD player, seek-and-scan, digital clock, auto-tone control, Radio Data System (RDS) and speed-compensated volume 1 - Upgradeable to (UC6) AM/FM stereo with 6-disc in-dash CD changer.	A	■	□[1]	□[1]	--
UC6		**Audio system**, AM/FM stereo with 6-disc CD changer, seek-and-scan, digital clock, auto-tone control, Radio Data System (RDS), speed-compensated volume and TheftLock	--	--	A	A	■
	UQ3	**Audio system feature**, speaker system 1 - Includes 4 speakers on Regular Cab and 6 speakers on Extended and Crew Cab Models.	--	--	■[1]	--	--
	UQ7	**Audio system feature**, Bose premium speaker system with sub-woofer in center console 1 - Included and only available with (A95) front reclining bucket seats.	--	--	A[1]	■	■
	UK6	**Audio system controls**, rear with 2 headphone jacks (headphones not included), power outlet and controls for volume, station selection and media 1 - Requires Crew Cab Models. Included and only available with (A95) front reclining bucket seats. 2 - Requires Crew Cab models.	--	--	A[1]	■[2]	■[2]
	D07	**Console**, floor with storage compartment and dual cup holders 1 - Included and only available with (A95) front reclining bucket seats.	--	--	A[1]	■	■
	DK7	**Console**, overhead mini with map lights 1 - Not available with (CF5) power sunroof.	--	--	■	■[1]	■[1]
K34		**Cruise control**, electronic with set and resume speed	A	■	■	■	■
C49		**Defogger**, rear-window electric 1 - Not available with (A28) sliding rear window or (C42) air conditioning delete. Available with Fleet and Government order types only. 2 - Not available with (A28) sliding rear window.	A[1]	■[2]	■[2]	■[2]	■[2]

Free Flow RPO Code	Ref. Only RPO Code	Description 1 - Equipment groups 1WT, 1LS and 1LT available on C*35903, C*35953, and C*35943 Models. 2 - Equipment group 2LT and 3LT available on C*35953 and C*35943 Models.	Reg., Ext. and Crew Cab Work Truck 1WT[1]	 LS 1LS[1]	 LT1 1LT[1]	Ext. and Crew Cab LT2 2LT[2]	 LT3 3LT[2]
AU3		**Door locks**, power 1 - Available with Fleet and Government order types only.	A[1]	A	■	■	■
B30		**Floor covering**, color-keyed carpeting with rubberized vinyl floor mats 1 - Available with Fleet and Government order types only. Not available with (**V) vinyl seat trim. 2 - Not available with (**V) vinyl interior trim. 3 - May be substituted with (BG9) rubberized-vinyl floor covering. Not available with (**V) vinyl seat trim.	A[1]	A[2]	□[3]	■	■
	DF5	**Mirror**, inside rearview auto-dimming with 8-point compass and outside temperature display	--	--	■	■	■
	AU0	**Remote Keyless Entry**, with 2 transmitters, panic button and content theft alarm	--	--	■	■	■
	**D	**Seat trim**, Custom Cloth	A	■	■	■	--
	**2	**Seat trim**, leather 1 - Not available on Regular Cab models. Extended Cab includes front leather seating surfaces with rear vinyl bench. Crew Cab includes front and rear leather-appointed seating surfaces.	--	--	A[1]	A[1]	■[1]
AE7		**Seats**, front 40/20/40 split-bench, 3-passenger, driver and front passenger manual reclining, center fold-down armrest with storage, adjustable outboard head restraints and storage pockets on Extended Cab models 1 - Requires (**D) Custom Cloth seat trim.	A[1]	■[1]	■	--	--
A95		**Seats**, front bucket, includes (AG1) 6-way power driver seat adjuster, front passenger manual recline, adjustable outboard head restraints, inboard armrests and storage pockets 1 - Requires Extended or Crew Cab Models. Requires Fleet and Government order types only. Includes (D07) floor console and (UO7) Bose Premium speaker system. Also includes (UK6) rear audio controls on Crew Cab Models. On 4WD Models, also requires (NP1) electronic shift transfer case.	--	--	A[1]	■	--
	AN3	**Seats**, front bucket, includes 10-way power driver and front passenger seat adjusters, 2-way power lumbar control, heated seat cushions and seatbacks, 2-position driver memory, adjustable outboard head restraints, floor console, dual inboard armrests and storage pockets	--	--	--	--	■
AG1		**Seat adjuster**, driver 6-way power 1 - Included with (**2) Seat trim, leather on Extended and Crew Cab Models. Included with (A95) front reclining bucket seats. 2 - With (AN3) front full-feature bucket seats, includes 10-way power seat adjusters.	--	--	A[1]	■	■[2]
	AG2	**Seat adjuster**, front passenger 10-way power 1 - Included and only available with (AN3) front full-feature bucket seats.	--	--	--	--	■[1]
	NP5	**Steering wheel**, leather-wrapped, Black with theft-deterrent locking feature	--	--	■	■	■

Free Flow RPO Code	Ref. Only RPO Code	Description 1 - Equipment groups 1WT, 1LS and 1LT available on C*35903, C*35953, and C*35943 Models. 2 - Equipment group 2LT and 3LT available on C*35953 and C*35943 Models.	Reg., Ext. and Crew Cab Work Truck 1WT[1]	 LS 1LS[1]	 LT1 1LT[1]	Ext. and Crew Cab LT2 2LT[2]	 LT3 3LT[2]
UK3		**Steering wheel controls**, mounted audio and Driver Information Center controls which provides access to enhanced Driver Information Center features and information	--	--	A	■	■
	A31	**Windows**, power with driver and front passenger Express-Down	--	--	■	■	■
VB3		**Bumper**, rear chrome, step-style with pad 1 - Not available with (ZW9) pickup box delete.	A[1]	■[1]	■[1]	■[1]	■[1]
T96		**Fog lamps**, front, halogen 1 - With 2WD models requires (V76) front frame-mounted recovery hooks.	--	--	A[1]	■	■
AJ1		**Glass**, Solar-Ray deep-tinted (all windows except light-tinted glass on windshield and driver- and front passenger-side glass) 1 - With Extended Cab models, includes rear window and rear quarter windows. With (C49) rear-window defogger, includes light-tinted rear window.	A[1]	A[1]	■[1]	■[1]	■[1]
	DL8	**Mirrors**, outside heated power-adjustable, Black, manual-folding 1 - Upgradeable to (DL3) outside heated, power-adjustable, power-folding mirrors (C6Y) 9600 lbs. (4354 kg) GVWR, (GEC) 9800 lbs. (4445 kg) GVWR, or (C4M) 9900 lbs. (4491 kg) GVWR is ordered or (DPN) outside vertical camper mirrors.	--	--	□[1]	□[1]	□[1]
	P06	**Wheels**, 6 - 16" x 6.5" (40.6 cm x 16.5 cm) 8-lug steel, with bright metal rings, chrome center caps and steel spare 1 - Requires and only available with (C7W) 11,400 lbs. (5171 kg) GVWR (dual rear wheel)	--	■[1]	■[1]	■[1]	■[1]
NP1		**Transfer case**, electronic shift with push-button controls 1 - Requires 4x4 models. Requires (MT1) heavy-duty 4-speed automatic transmission or (MW7) Allison 1000 6-speed automatic transmission.	--	--	A[1]	■[1]	■[1]
MT1		**Transmission**, 4-speed automatic, heavy-duty, electronically controlled with overdrive and tow/haul mode. Includes (KNP) external transmission oil cooler 1 - Requires (LQ4) Vortec 6.0L V8 SFI engine. Standard on (C6Y) 9600 lbs. (4354 kg) GVWR, (GEC) 9800 lbs. (4445 kg) GVWR or (C4M) 9900 lbs. (4491 kg) GVWR. 2 - Requires (LQ4) Vortec 6.0L V8 SFI engine.	A[1]	A[1]	A[1]	■[2]	■[2]

ADDITIONAL OPTIONS

Free Flow RPO Code	Ref. Only RPO Code	Description 1 - Equipment groups 1WT, 1LS and 1LT available on C*35903, C*35953, and C*35943 Models. 2 - Equipment group 2LT and 3LT available on C*35953 and C*35943 Models.	Reg., Ext. and Crew Cab Work Truck 1WT[1]	 LS 1LS[1]	 LT1 1LT[1]	Ext. and Crew Cab LT2 2LT[2]	 LT3 3LT[2]
CJ3		**Air conditioning**, dual-zone manual climate control with individual climate settings for driver and right-front passenger 1 - Required and only available when (VYU) Snow Plow Prep Package is selected.	S	S	S	A[1]	A[1]
C42		**Air conditioning delete**, provides heater only 1 - Requires Regular Cab models.	A[1]	--	--	--	--

ADDITIONAL OPTIONS

Free Flow RPO Code	Ref. Only RPO Code	Description 1 - Equipment groups 1WT, 1LS and 1LT available on C*35903, C*35953, and C*35943 Models. 2 - Equipment group 2LT and 3LT available on C*35953 and C*35943 Models.	Reg., Ext. and Crew Cab			Ext. and Crew Cab	
			Work Truck 1WT[1]	LS 1LS[1]	LT1 1LT[1]	LT2 2LT[2]	LT3 3LT[2]
CJ2		**Air conditioning**, dual-zone automatic climate control with individual climate settings for driver and right-front passenger 1 - Requires Extended or Crew Cab models. Not available with (VYU) Snow Plow Prep Package. 2 - Must be substituted with (CJ3) dual-zone manual air conditioning when (VYU) Snow Plow Prep Package is ordered.	--	--	A[1]	□[2]	□[2]
UB0		**Audio system**, AM/FM stereo with CD player, seek-and-scan, digital clock, auto-tone control, Radio Data System (RDS) and speed-compensated volume 1 - Upgradeable to (UC6) AM/FM stereo with 6-disc in-dash CD changer.	A	■	□[1]	□[1]	--
UC6		**Audio system**, AM/FM stereo with 6-disc CD changer, seek-and-scan, digital clock, auto-tone control, Radio Data System (RDS), speed-compensated volume and TheftLock	--	--	A	A	■
K34		**Cruise control**, electronic with set and resume speed	A	■	■	■	■
C49		**Defogger**, rear-window electric 1 - Not available with (A28) sliding rear window or (C42) air conditioning delete. Available with Fleet and Government order types only. 2 - Not available with (A28) sliding rear window.	A[1]	■[2]	■[2]	■[2]	■[2]
AU3		**Door locks**, power 1 - Available with Fleet and Government order types only.	A[1]	A	■	■	■
U42		**Entertainment system**, rear seat DVD player with LCD display and 2 sets of wireless headphones 1 - Requires Crew Cab models and (CJ2) dual-zone automatic air conditioning.	--	--	--	A[1]	A[1]
BG9		**Floor covering**, Black rubberized-vinyl 1 - Not available with (922) Medium Gray leather seating surfaces.	S	S	A[1]	--	--
B30		**Floor covering**, color-keyed carpeting with rubberized vinyl floor mats 1 - Available with Fleet and Government order types only. Not available with (**V) vinyl seat trim. 2 - Not available with (**V) vinyl interior trim. 3 - May be substituted with (BG9) rubberized-vinyl floor covering. Not available with (**V) vinyl seat trim.	A[1]	A[2]	□[3]	■	■

ADDITIONAL OPTIONS

Free Flow RPO Code	Ref. Only RPO Code	Description 1 - Equipment groups 1WT, 1LS and 1LT available on C*35903, C*35953, and C*35943 Models. 2 - Equipment group 2LT and 3LT available on C*35953 and C*35943 Models.	Reg., Ext. and Crew Cab			Ext. and Crew Cab	
			Work Truck 1WT[1]	LS 1LS[1]	LT1 1LT[1]	LT2 2LT[2]	LT3 3LT[2]
UE1		**OnStar**, 1-year of Safe and Sound plan. Includes Automatic Notification of Air Bag Deployment, Stolen Vehicle Location Assistance, Emergency Services, Roadside Assistance, Remote Door Unlock, OnStar Vehicle Diagnostics, Hands-Free Calling, AccidentAssist and Remote Horn & Lights 1 - OnStar services require vehicle electrical system (including battery), wireless service and GPS satellite signals to be available and operating for features to function properly. OnStar acts as a link to existing emergency service providers. OnStar Vehicle Diagnostics available on most 2004 MY and newer GM vehicles. Diagnostic capability varies by model. Visit onstar.com for system limitations and details. Requires (UK3) steering-wheel mounted audio controls. Not available with a ship-to of Puerto Rico or the Virgin Islands.	--	--	A[1]	A[1]	A[1]
PDB		**OnStar Plus Package**, includes (U2K) XM Satellite Radio, (UE1) OnStar and (UK3) steering-wheel mounted audio controls 1 - Package does not include (U2K) XM Satellite Radio when ordered outside the 48 contiguous United States. Not available with a ship-to of Puerto Rico or the Virgin Islands.	--	--	A[1]	A[1]	A[1]
R6Q		**OnStar Plus Package discount not desired** 1 - Required when content within option package is ordered and entire package is not desired.	--	--	A[1]	A[1]	A[1]
AE7		**Seats**, front 40/20/40 split-bench, 3-passenger, driver and front passenger manual reclining with outboard head restraints	S	A	--	--	--
AE7		**Seats**, front 40/20/40 split-bench, 3-passenger, driver and front passenger manual reclining, center fold-down armrest with storage, adjustable outboard head restraints and storage pockets on Extended Cab models 1 - Requires (**D) Custom Cloth seat trim.	A[1]	■[1]	■	--	--
A95		**Seats**, front bucket, includes (AG1) 6-way power driver seat adjuster, front passenger manual recline, adjustable outboard head restraints, inboard armrests and storage pockets 1 - Requires Extended or Crew Cab Models. Requires Fleet and Government order types only. Includes (D07) floor console and (UQ7) Bose Premium speaker system. Also includes (UK6) rear audio controls on Crew Cab Models. On 4WD Models, also requires (NP1) electronic shift transfer case.	--	--	A[1]	■	--
AG1		**Seat adjuster**, driver 6-way power 1 - Included with (**2) Seat trim, leather on Extended and Crew Cab Models. Included with (A95) front reclining bucket seats. 2 - With (AN3) front full-feature bucket seats, includes 10-way power seat adjusters.	--	--	A[1]	■	■[2]
DNH		**Regular production accessory**, Underseat storage, rear, lockable 1 - Requires Extended Cab models. For additional GM Accessory Offerings and Installation, please contact your local GM Accessory Distributor Installer (ADI).	A/D[1]	A/D[1]	A/D[1]	A/D[1]	A/D[1]

ADDITIONAL OPTIONS

Free Flow RPO Code	Ref. Only RPO Code	Description 1 - Equipment groups 1WT, 1LS and 1LT available on C*35903, C*35953, and C*35943 Models. 2 - Equipment group 2LT and 3LT available on C*35953 and C*35943 Models.	Reg., Ext. and Crew Cab			Ext. and Crew Cab	
			Work Truck 1WT[1]	LS 1LS[1]	LT1 1LT[1]	LT2 2LT[2]	LT3 3LT[2]
UK3		**Steering wheel controls**, mounted audio and Driver Information Center controls which provides access to enhanced Driver Information Center features and information	--	--	A	■	■
CF5		**Sunroof**, power, tilt-sliding with express-open and wind deflector, includes (UG1) Universal Home Remote 1 - Requires (CJ2) dual-zone automatic air conditioning. Not available with (VYU) Snow Plow Prep Package.	--	--	--	A[1]	A[1]
A28		**Window**, manual rear-sliding, deep-tinted 1 - Requires (AJ1) Solar-Ray deep-tinted glass. Deletes or not available with (C49) rear-window defogger when ordered. Not available with (ZW9) pickup box delete.	A[1]	A[1]	A[1]	A[1]	A[1]
U2K		**XM Satellite Radio**. With a wide variety of programming, XM has something to excite any driver. Whether you want to be entertained or informed, to laugh, think, or sing, XM has the perfect channel for you - coast-to-coast, and in digital-quality sound. 3 trial months - no obligation 1 - Available in the 48 contiguous United States. Required $12.95 monthly subscription sold separately. All fees and programming subject to change. Subscription subject to customer agreement. For more information, visit gm.xmradio.com.	--	--	A[1]	A[1]	A[1]
VB3		**Bumper**, rear chrome, step-style with pad 1 - Not available with (ZW9) pickup box delete.	A[1]	■[1]	■[1]	■[1]	■[1]
VF7		**Bumper, rear delete (vehicles registered in certain states must** have a rear bumper to be operated on their roads, consult local laws) 1 - Not available with (Z82) heavy-duty trailering equipment or (ZW9) pickup box delete.	A[1]	A[1]	A[1]	--	--
T96		**Fog lamps**, front, halogen 1 - With 2WD models requires (V76) front frame-mounted recovery hooks.	--	--	A[1]	■	■
AJ1		**Glass**, Solar-Ray deep-tinted (all windows except light-tinted glass on windshield and driver- and front passenger-side glass) 1 - With Extended Cab models, includes rear window and rear quarter windows. With (C49) rear-window defogger, includes light-tinted rear window.	A[1]	A[1]	■[1]	■[1]	■[1]
U01		**Lamps**, Amber roof marker 1 - Standard on (C7W) 11,400 lbs. (5171 kg) GVWR only.	A[1]	A[1]	A[1]	A[1]	A[1]
DF2		**Mirrors**, outside high-visibility camper-style, Black, manual-folding and extension, includes a dual-segment mirror on the driver-side that provides enhanced wide angle capacity (not recommended for bodies or trailers wider than 86" [218.4 cm])	A	A	--	--	--

ADDITIONAL OPTIONS

Free Flow RPO Code	Ref. Only RPO Code	Description 1 - Equipment groups 1WT, 1LS and 1LT available on C*35903, C*35953, and C*35943 Models. 2 - Equipment group 2LT and 3LT available on C*35953 and C*35943 Models.	Reg., Ext. and Crew Cab			Ext. and Crew Cab	
			Work Truck 1WT[1]	LS 1LS[1]	LT1 1LT[1]	LT2 2LT[2]	LT3 3LT[2]
DL3		**Mirrors**, outside heated power-adjustable, power-folding and driver-side auto-dimming, Black with integrated turn signal indicators 1 - Requires (C6Y) 9600 lbs. (4354 kg) GVWR, (GEC) 9800 lbs. (4445 kg) GVWR or (C4M) 9900 lbs. (4491 kg) GVWR. Curb-tilt feature requires (UK3) steering-wheel mounted audio controls. 2 - Requires (C6Y) 9600 lbs. (4354 kg) GVWR, (GEC) 9800 lbs. (4445 kg) GVWR or (C4M) 9900 lbs. (4491 kg) GVWR. Includes curb-tilt when (UK3) steering-wheel mounted audio controls is ordered.	--	--	A[1]	A[2]	A[2]
DPN		**Mirrors**, outside heated power-adjustable vertical camper manual-folding and extension, integrated turn signal indicators and lower convex spotter glass (convex glass is not heated)	--	--	A	A	A
ZW9		**Pickup box**, delete 1 - Standard on CC35903 models.	A[1]	A[1]	A[1]	A	A
BVE		**Regular production accessory**, Assist steps, chrome plated tubular, stainless steel 1 - Not available with (ZW9) pickup box delete. For additional GM Accessory Offerings and Installation, please contact your local GM Accessory Distributor Installer (ADI).	A/D[1]	A/D[1]	A/D[1]	A/D[1]	A/D[1]
BVS		**Regular production accessory**, Assist steps, Black coated tubular, stainless steel 1 - Not available with (ZW9) pickup box delete. For additional GM Accessory Offerings and Installation, please contact your local GM Accessory Distributor Installer (ADI).	A/D[1]	A/D[1]	A/D[1]	A/D[1]	A/D[1]
PPB		**Regular production accessory**, Pickup bed extender, brushed aluminum 1 - Not available with (ZW9) pickup box delete. For additional GM Accessory Offerings and Installation, please contact your local GM Accessory Distributor Installer (ADI).	A/D[1]	A/D[1]	A/D[1]	A/D[1]	A/D[1]
E95		**Regular production accessory**, Tonneau cover, Black, soft 1 - Not available with (ZW9) pickup box delete. For additional GM Accessory Offerings and Installation, please contact your local GM Accessory Distributor Installer (ADI).	A/D[1]	A/D[1]	A/D[1]	A/D[1]	A/D[1]
EN6		**Regular production accessory**, Tonneau cover, Black, hard, folding, lockable 1 - Not available with (ZW9) pickup box delete. For additional GM Accessory Offerings and Installation, please contact your local GM Accessory Distributor Installer (ADI).	A/D[1]	A/D[1]	A/D[1]	A/D[1]	A/D[1]
XYK		**Tires**, LT215/85R16D all-season, blackwall 1 - Requires and standard on CK35903 and (C7W) 11,400 lbs. (5171 kg) GVWR, CC35953 or CC35943 models. Not available with CK35903 models and (VYU) Snow Plow Prep Package. Includes 7 tires with (E63) Fleetside pickup box. Includes 6 tires with (ZW9) pickup box delete. Not available with (C6Y) 9600 lbs. (4354 kg) GVWR, (GEC) 9800 lbs. (4445 kg) GVWR or (C4M) 9900 lbs. (4491 kg) GVWR.	A[1]	A[1]	A[1]	A[1]	A[1]

ADDITIONAL OPTIONS

Free Flow RPO Code	Ref. Only RPO Code	Description 1 - Equipment groups 1WT, 1LS and 1LT available on C*35903, C*35953, and C*35943 Models. 2 - Equipment group 2LT and 3LT available on C*35953 and C*35943 Models.	Reg., Ext. and Crew Cab			Ext. and Crew Cab	
			Work Truck 1WT[1]	LS 1LS[1]	LT1 1LT[1]	LT2 2LT[2]	LT3 3LT[2]
XEC		Tires, LT215/85R16E all-season, blackwall 1 - Required and standard on CK35903 models and (VYU) Snow Plow Prep Package or CK35953 or CK35943 models and (C7W) 11,400 lbs. (5171 kg) GVWR. Includes 7 tires with (E63) Fleetside pickup box. Includes 6 tires with (ZW9) pickup box delete. Not available with (C6Y) 9600 lbs. (4354 kg) GVWR, (GEC) 9800 lbs. (4445 kg) GVWR or (C4M) 9900 lbs. (4491 kg) GVWR.	A[1]	A[1]	A[1]	A[1]	A[1]
XEF		Tires, LT215/85R16E on-/off-road, blackwall 1 - Includes 7 Tires with (E63) Fleetside pickup box. Includes 6 tires with (ZW9) pickup box delete. Not available with (C6Y) 9600 lbs. (4354 kg) GVWR, (GEC) 9800 lbs. (4445 kg) GVWR or (C4M) 9900 lbs. (4491 kg) GVWR.	A[1]	A[1]	A[1]	A[1]	A[1]
ZER		Tire, spare LT265/75R16E on-/off-road, blackwall, located at rear underbody of vehicle 1 - Requires CC35903 models, CK35903 models and (C4M) 9900 lbs. (4491 kg) GVWR, C*35943 models and (C4M) 9900 lbs. (4491 kg) GVWR or CK35953 models and (C4M) 9900 lbs. (4491 kg) GVWR or CC35953 models and (GEC) 9800 lbs. (4445 kg) GVWR or (C4M) 9900 lbs. (4491 kg) GVWR. Requires (ZW9) pickup box delete and (QER) LT265/75R16E on-/off-road, blackwall tires. 2 - Requires C*35943 or CK35953 models, (C4M) 9900 lbs. (4491 kg) GVWR or CC35953 models and (GEC) 9800 lbs. (4445 kg) GVWR or (C4M) 9900 lbs. (4491 kg) GVWR. Requires (ZW9) pickup box delete and (QER) LT265/75R16E on-/off-road, blackwall tires.	A[1]	A[1]	A[1]	A[2]	A[2]
ZYK		Tire, spare LT215/85R16D all-season, blackwall, located at rear underbody of vehicle 1 - Requires CK35903, CC35943 or CC35953 models and (ZW9) pickup box delete and (XYK) LT215/85R16D all-season blackwall tires. With CK35903, not available with (VYU) Snow Plow Prep Package. Not available with (C6Y) 9600 lbs. (4354 kg) GVWR, (GEC) 9800 lbs. (4445 kg) GVWR or (C4M) 9900 lbs. (4491 kg) GVWR. 2 - Requires CC35943 or CC35953 models and (ZW9) pickup box delete and (XYK) LT215/85R16D all-season blackwall tires. Not available with (C6Y) 9600 lbs. (4354 kg) GVWR, (GEC) 9800 lbs. (4445 kg) GVWR or (C4M) 9900 lbs. (4491 kg) GVWR.	A[1]	A[1]	A[1]	A[2]	A[2]
ZEC		Tire, spare LT215/85R16E all-season, blackwall, located at rear underbody of vehicle 1 - Requires CK35903 models and (VYU) Snow Plow Prep Package or CK35943 or CK35953 models, (ZW9) pickup box delete and (XEC) LT215/85R16E all-season blackwall tires. Not available with (C6Y) 9600 lbs. (4354 kg) GVWR, (GEC) 9800 lbs. (4445 kg) GVWR or (C4M) 9900 lbs. (4491 kg) GVWR. 2 - Requires CK35943 or CK35953 models and (ZW9) pickup box delete and (XEC) LT215/85R16E all-season blackwall tires. Not available with (C6Y) 9600 lbs. (4354 kg) GVWR, (GEC) 9800 lbs. (4445 kg) GVWR or (C4M) 9900 lbs. (4491 kg) GVWR.	A[1]	A[1]	A[1]	A[2]	A[2]
ZEF		Tire, spare LT215/85R16E, on-/off-road, blackwall, located at rear underbody of vehicle 1 - Requires (XEF) LT215/85R16E on-/off-road blackwall tires and (ZW9) pickup box delete. Not available with (C6Y) 9600 lbs. (4354 kg) GVWR, (GEC) 9800 lbs. (4445 kg) GVWR or (C4M) 9900 lbs. (4491 kg) GVWR.	A[1]	A[1]	A[1]	A[1]	A[1]

ADDITIONAL OPTIONS

Free Flow RPO Code	Ref. Only RPO Code	Description 1 - Equipment groups 1WT, 1LS and 1LT available on C*35903, C*35953, and C*35943 Models. 2 - Equipment group 2LT and 3LT available on C*35953 and C*35943 Models.	Reg., Ext. and Crew Cab			Ext. and Crew Cab	
			Work Truck 1WT[1]	LS 1LS[1]	LT1 1LT[1]	LT2 2LT[2]	LT3 3LT[2]
SAF		**Spare tire lock**, keyed cylinder lock that utilizes same key as ignition and door 1 - Not available with (ZW9) pickup box delete.	A[1]	A[1]	A[1]	A[1]	A[1]
NZ7		**Wheels**, 4 - 16" x 7" (40.6 cm x 17.8 cm) 8-lug chrome-clad steel 1 - Requires CK35943 models and (C4M) 9900 lbs. (4491 kg) GVWR.	--	--	A[1]	A[1]	A[1]
K47		**Air cleaner**, high-capacity 1 - Included with (LBZ) Duramax 6.6L Turbo Diesel V8 engine, (Z82) heavy-duty trailering equipment or (VYU) Snow Plow Prep Package.	A[1]	A[1]	A[1]	A[1]	A[1]
KL5		**Alternative fuel conversions**, conversion-ready engine, includes internal modifications for operation with natural or propane gas 1 - Requires (LQ4) Vortec 6.0L V8 SFI engine and (MT1) heavy-duty 4-speed automatic transmission.	A[1]	A[1]	A[1]	A[1]	A[1]
TP2		**Battery**, auxiliary heavy-duty 600 cold-cranking amps, maintenance-free 1 - Not available with (LBZ) Duramax 6.6L Turbo Diesel V8 engine.	A[1]	A[1]	A[1]	A[1]	A[1]
G80		**Differential**, heavy-duty automatic locking rear 1 - Standard on (C6Y) 9600 lbs. (4354 kg) GVWR, (GEC) 9800 lbs. (4445 kg) GVWR, or (C4M) 9900 lbs. (4491 kg) GVWR.	A[1]	A[1]	A[1]	A[1]	A[1]
FE9		**Emissions**, Federal requirements	A	A	A	A	A
YF5		**Emissions**, California state requirements	A	A	A	A	A
NE1		**Emissions**, Maine, Massachusetts, New York or Vermont state requirements	A	A	A	A	A
NB8		**Emissions override**, California, Massachusetts or New York (for vehicles ordered by dealers in states of California, Massachusetts or New York with Federal emissions) 1 - Requires (FE9) Federal emissions requirements.	A[1]	A[1]	A[1]	A[1]	A[1]
NC7		**Emissions override**, Federal (for vehicles ordered by dealers in Federal emission states with California, New York, Vermont, Massachusetts or Maine emissions; may also be used by dealers in states of California, New York, Vermont, Massachusetts or Maine to order different state-specific emissions) 1 - Requires (YF5) California state emissions requirements or (NE1) New York, Vermont, Massachusetts or Maine state emissions requirements.	A[1]	A[1]	A[1]	A[1]	A[1]
K05		**Engine block heater** 1 - Included with (LBZ) Duramax 6.6L Turbo Diesel V8 engine.	A[1]	A[1]	A[1]	A[1]	A[1]
L18		**Engine**, Vortec 8.1L V8 SFI (330 hp [245.8 kW] @ 4200 rpm, 450 lb-ft of torque [607.5 N-m] @ 3200 rpm) 1 - Not available with CC35903 models.	A[1]	A[1]	A[1]	A	A

ADDITIONAL OPTIONS

Free Flow RPO Code	Ref. Only RPO Code	Description 1 - Equipment groups 1WT, 1LS and 1LT available on C*35903, C*35953, and C*35943 Models. 2 - Equipment group 2LT and 3LT available on C*35953 and C*35943 Models.	Reg., Ext. and Crew Cab			Ext. and Crew Cab	
			Work Truck 1WT[1]	LS 1LS[1]	LT1 1LT[1]	LT2 2LT[2]	LT3 3LT[2]
LBZ		**Engine**, Duramax 6.6L Turbo Diesel V8 (360 hp [268.0 kW] @ 3200 rpm, 650 lb-ft of torque [881.0 N-m] @ 1600 rpm) 1 - Requires (MW7) Allison 1000 6-speed automatic transmission. Includes (TQ3) heavy-duty dual, 770 cold-cranking-amp batteries, (KG3) 145-amp alternator, (K47) high-capacity air cleaner and (K05) engine block heater. Not available with CC35903 models.	A[1]	A[1]	A[1]	A[1]	A[1]
V10		**Covers**, radiator grille and front bumper openings for diesel engines in winter weather 1 - Requires (LBZ) Duramax 6.6L Turbo Diesel V8 engine and is required on orders with "Ship To" locations within the following states: Maine, New Hampshire, Vermont, Minnesota, North Dakota, South Dakota, Montana, Alaska, Idaho, Wisconsin, Wyoming, Michigan, Colorado and New York.	A[1]	A[1]	A[1]	A[1]	A[1]
GEC		**GVWR**, 9800 lbs. (4445 kg) with single rear wheels 1 - Requires CC35953 models and (LQ4) Vortec 6.0L V8 SFI engine.	A[1]	A[1]	A[1]	A[1]	A[1]
C4M		**GVWR**, 9900 lbs. (4490 kg) with single rear wheels 1 - Requires CK35903, C*35943 or CK35953 models or CC35953 models and (L18) Vortec 8.1L V8 SFI engine or (LBZ) Duramax 6.6L Turbo Diesel V8 engine. 2 - Requires C*35943 or CK35953 models or CC35953 models and (L18) Vortec 8.1L V8 SFI engine or (LBZ) Duramax 6.6L Turbo Diesel V8 engine.	A[1]	A[1]	A[1]	A[2]	A[2]
C7W		**GVWR**, 11,400 lbs. (5171 kg) with dual rear wheels 1 - Not available with CC35903 models.	A[1]	A[1]	A[1]	A	A
PDN		**Heavy-Duty Power Package**, includes (LBZ) Duramax 6.6L Turbo Diesel engine, (MW7) Allison 1000 6-speed automatic transmission and (G80) heavy-duty rear locking differential	A	A	A	A	A
R6Y		**Heavy-Duty Power Package discount not desired**	A	A	A	A	A
GT4		**Rear axle**, 3.73 ratio 1 - Refer to Engine/Axle Chart for availability.	A[1]	A[1]	A[1]	A[1]	A[1]
NZZ		**Skid Plate Package**, includes aluminum front underbody shield starting behind front bumper and running to first cross-member, protecting front underbody, oil pan, differential case and transfer case, frame-mounted shields 1 - Requires 4x4 models. Included with (VYU) Snow Plow Prep Package.	A[1]	A[1]	A[1]	A[1]	A[1]

ADDITIONAL OPTIONS

Free Flow RPO Code	Ref. Only RPO Code	Description 1 - Equipment groups 1WT, 1LS and 1LT available on C*35903, C*35953, and C*35943 Models. 2 - Equipment group 2LT and 3LT available on C*35953 and C*35943 Models.	Reg., Ext. and Crew Cab			Ext. and Crew Cab	
			Work Truck 1WT[1]	LS 1LS[1]	LT1 1LT[1]	LT2 2LT[2]	LT3 3LT[2]
VYU		**Snow Plow Prep Package**, includes 10-amp power for backup and roof emergency light, (KG3) 145-amp alternator, high-flow front bumper, forward lamp wiring harness, 1.65" (42 mm) access hole with grommet in front of dash panel, roof beacon lamp provisions with switch on the instrument panel, instrument panel jumper wiring harness for electric trailer brake controller, (K47) high-capacity air cleaner and (NZZ) Skid Plate Package 1 - Requires 4x4 models and not available with (CJ2) dual-zone automatic air conditioning. With models CK35903 and (C7W) 11,400 lbs. (5171 kg) GVWR (dual rear wheel) requires (XEC) LT215/85R16E all-season blackwall tires or (XEF) LT215/85R16E on-/off-road blackwall tires. With models CK35903 and (C4M) 9900 lbs. (4491 kg) GVWR (single rear wheel) not available with (LBZ) Duramax 6.6L Turbo Diesel V8 engine. With models CK35953 and (C7W) 11,400 lbs. (5171 kg) GVWR (dual rear wheel) not available with (LBZ) Duramax 6.6L Turbo Diesel V8 engine. With models CK35953 and (C4M) 9900 lbs. (4491 kg) GVWR (single rear wheel) requires (LQ4) Vortec 6.0L V8 engine. With models CK35943 requires (C7W) 11,400 lbs. (5171 kg) GVWR (dual rear wheel) and (LQ4) Vortec 6.0L V8 engine. With models CK35943 not available with (C4M) 9900 lbs. (4491 kg) GVWR (single rear wheel).	A[1]	A[1]	A[1]	A[1]	A[1]
Z82		**Trailering equipment**, heavy-duty, includes trailering hitch platform, 7-wire harness (harness includes wires for: park lamps, backup lamps, right turn, left turn, electric brake lead, battery and ground) with independent fused trailering circuits mated to a 7-way sealed connector, instrument panel jumper wiring harness for electric trailer brake controller and 1-way sealed connector for center high-mounted stop/brake lamp and (K47) high-capacity air cleaner 1 - Not available with (ZW9) pickup box delete or (VF7) rear bumper delete. 2 - Not available with (ZW9) pickup box delete.	A[1]	A[1]	A[1]	A[2]	A[2]
UY2		**Trailering wiring provisions**, for camper, fifth wheel and gooseneck trailer, includes additional 8-way wiring harness routed to front of pickup box and added 7-way sealed connector for the trailer harness 1 - Requires (Z82) heavy-duty trailering equipment.	A[1]	A[1]	A[1]	A[1]	A[1]
NP1		**Transfer case**, electronic shift with push-button controls 1 - Requires 4x4 models. Requires (MT1) heavy-duty 4-speed automatic transmission or (MW7) Allison 1000 6-speed automatic transmission.	--	--	A[1]	■[1]	■[1]
MT1		**Transmission**, 4-speed automatic, heavy-duty, electronically controlled with overdrive and tow/haul mode. Includes (KNP) external transmission oil cooler 1 - Requires (LQ4) Vortec 6.0L V8 SFI engine. Standard on (C6Y) 9600 lbs. (4354 kg) GVWR, (GEC) 9800 lbs. (4445 kg) GVWR or (C4M) 9900 lbs. (4491 kg) GVWR. 2 - Requires (LQ4) Vortec 6.0L V8 SFI engine.	A[1]	A[1]	A[1]	■[2]	■[2]

ADDITIONAL OPTIONS								
Free Flow RPO Code	Ref. Only RPO Code	Description 1 - Equipment groups 1WT, 1LS and 1LT available on C*35903, C*35953, and C*35943 Models. 2 - Equipment group 2LT and 3LT available on C*35953 and C*35943 Models.	Reg., Ext. and Crew Cab			Ext. and Crew Cab	
			Work Truck 1WT[1]	LS 1LS[1]	LT1 1LT[1]	LT2 2LT[2]	LT3 3LT[2]
MW7		Transmission, Allison 1000 6-speed automatic, electronically controlled with overdrive, electronic engine grade braking and tow/haul mode. Includes (KNP) external transmission oil cooler 1 - Requires (LBZ) Duramax 6.6L Turbo Diesel V8 engine or (L18) Vortec 8.1L V8 SFI engine.	A[1]	A[1]	A[1]	A[1]	A[1]

S = Standard Equipment A = Available – (dashes) = Not Available D = ADI Available
■ = Included in Equipment Group □ = Included in Equipment Group but upgradeable

No deletions allowed to Equipment Groups. Additional options may be added; check ordering information section for compatibility.

*Indicates availability of feature on multiple models. For example, it indicates feature availability on 2WD and 4WD Models or Rear wheel drive and All-wheel drive Models.

Codes listed in the shaded column titled Ref. Only RPO Code are for internal use only and should not be ordered.

Free Flow RPO Code	Ref. Only RPO Code	Description 1 - Equipment groups 1WT, 1LS and 1LT available on C*35903, C*35953, and C*35943 Models. 2 - Equipment group 2LT and 3LT available on C*35953 and C*35943 Models.	Reg., Ext. and Crew Cab			Ext. and Crew Cab	
			Work Truck 1WT[1]	LS 1LS[1]	LT1 1LT[1]	LT2 2LT[2]	LT3 3LT[2]
VB3		**Bumper**, rear chrome		■	■	■	■
K34		**Cruise control**		■	■	■	■
C49		**Defogger**, rear-window		■	■	■	■
	P06	**Wheels**, 6 - 16" x 6.5" (40.6 cm x 16.5 cm) 8-lug steel		■	■	■	■
UB0		**Audio system**, AM/FM stereo with CD player 1 - Upgradeable to (UC6) AM/FM stereo with 6-disc in-dash CD changer.		■	□[1]	□[1]	
	**D	**Seat trim**, Custom Cloth		■	■	■	
AE7		**Seats**, front 40/20/40 split-bench		■	■		
	DK7	**Console**, overhead mini			■	■	■
AU3		**Door locks**, power			■	■	■
B30		**Floor covering**, color-keyed carpeting 1 - May be substituted with (BG9) rubberized-vinyl floor covering. Not available with (**V) vinyl seat trim.			□[1]	■	■
AJ1		**Glass**, Solar-Ray deep-tinted			■	■	■
	DF5	**Mirror**, inside rearview auto-dimming			■	■	■
	DL8	**Mirrors**, outside heated power-adjustable, Black 1 - Upgradeable to (DL3) outside heated, power-adjustable, power-folding mirrors (C6Y) 9600 lbs. (4354 kg) GVWR, (GEC) 9800 lbs. (4445 kg) GVWR, or (C4M) 9900 lbs. (4491 kg) GVWR is ordered or (DPN) outside vertical camper mirrors.			□[1]	□[1]	□[1]
	AU0	**Remote Keyless Entry**			■	■	■
	NP5	**Steering wheel**, leather-wrapped, Black			■	■	■
	A31	**Windows**, power			■	■	■
	UQ3	**Audio system feature**, speaker system			■		
CJ2		**Air conditioning**, dual-zone automatic climate control 1 - Must be substituted with (CJ3) dual-zone manual air conditioning when (VYU) Snow Plow Prep Package is ordered.				□[1]	□[1]
	UK6	**Audio system controls**, rear				■	■
	UQ7	**Audio system feature**, Bose premium speaker system				■	■
	D07	**Console**, floor				■	■
T96		**Fog lamps**, front				■	■
AG1		**Seat adjuster**, driver 6-way power				■	■

2007 Chevrolet Truck Silverado 3500 PEG STAIRSTEP
Classic

Free Flow RPO Code	Ref. Only RPO Code	Description 1 - Equipment groups 1WT, 1LS and 1LT available on C*35903, C*35953, and C*35943 Models. 2 - Equipment group 2LT and 3LT available on C*35953 and C*35943 Models.	Reg., Ext. and Crew Cab			Ext. and Crew Cab	
			Work Truck 1WT[1]	LS 1LS[1]	LT1 1LT[1]	LT2 2LT[2]	LT3 3LT[2]
UK3		**Steering wheel controls**, mounted audio and Driver Information Center controls				■	■
NP1		**Transfer case**, electronic shift				■	■
MT1		**Transmission**, 4-speed automatic, heavy-duty				■	■
A95		**Seats**, front bucket				■	
UC6		**Audio system**, AM/FM stereo with 6-disc CD changer					■
	AG2	**Seat adjuster**, front passenger 10-way power					■
	AN3	**Seats**, front bucket					■
	**2	**Seat trim**, leather					■

2007 Chevrolet Truck Silverado 3500 INTERIOR
Classic

S = Standard Equipment A = Available -- (dashes) = Not Available D = ADI Available
■ = Included in Equipment Group □ = Included in Equipment Group but upgradeable

*Indicates availability of feature on multiple models. For example, it indicates feature availability on 2WD and 4WD Models or Rear wheel drive and All-wheel drive Models.

Codes listed in the shaded column titled Ref. Only RPO Code are for internal use only and should not be ordered.

Free Flow RPO Code	Ref. Only RPO Code	Description 1 - Equipment groups 1WT, 1LS and 1LT available on C*35903, C*35953, and C*35943 Models. 2 - Equipment group 2LT and 3LT available on C*35953 and C*35943 Models.	Reg., Ext. and Crew Cab			Ext. and Crew Cab	
			Work Truck 1WT[1]	LS 1LS[1]	LT1 1LT[1]	LT2 2LT[2]	LT3 3LT[2]
		Air bags, frontal, driver and right-front passenger **1 - Regular and Extended Cab models includes passenger-side deactivation switch. Never place a rear-facing infant restraint in the front seat of any vehicle equipped with an active frontal air bag. Always use safety belts and the correct child restraints for your child's age and size. Children are safer when properly secured in a rear seat. See the vehicle's Owner's Manual and child safety seat instructions for more safety information.**	S[1]	S[1]	S[1]	S[1]	S[1]
CJ3		**Air conditioning**, dual-zone manual climate control with individual climate settings for driver and right-front passenger **1 - Required and only available when (VYU) Snow Plow Prep Package is selected.**	S	S	S	A[1]	A[1]
C42		**Air conditioning delete**, provides heater only **1 - Requires Regular Cab models.**	A[1]	--	--	--	--
CJ2		**Air conditioning**, dual-zone automatic climate control with individual climate settings for driver and right-front passenger **1 - Requires Extended or Crew Cab models. Not available with (VYU) Snow Plow Prep Package.** **2 - Must be substituted with (CJ3) dual-zone manual air conditioning when (VYU) Snow Plow Prep Package is ordered.**	--	--	A[1]	□[2]	□[2]
		Assist handle, front passenger **1 - Also includes rear outboard passenger assist handle on Extended and Crew Cab models.**	S[1]	S[1]	S[1]	S[1]	S[1]
	UM7	**Audio system**, AM/FM stereo with seek-and-scan and digital clock	S	--	--	--	--
UB0		**Audio system**, AM/FM stereo with CD player, seek-and-scan, digital clock, auto-tone control, Radio Data System (RDS) and speed-compensated volume **1 - Upgradeable to (UC6) AM/FM stereo with 6-disc in-dash CD changer.**	A	■	□[1]	□[1]	--
UC6		**Audio system**, AM/FM stereo with 6-disc CD changer, seek-and-scan, digital clock, auto-tone control, Radio Data System (RDS), speed-compensated volume and TheftLock	--	--	A	A	■
	UQ5	**Audio system feature**, 4-speaker system	S	S	--	--	--
	UQ3	**Audio system feature**, speaker system **1 - Includes 4 speakers on Regular Cab and 6 speakers on Extended and Crew Cab Models.**	--	--	■[1]	--	--
	UQ7	**Audio system feature**, Bose premium speaker system with sub-woofer in center console **1 - Included and only available with (A95) front reclining bucket seats.**	--	--	A[1]	■	■

Free Flow RPO Code	Ref. Only RPO Code	Description 1 - Equipment groups 1WT, 1LS and 1LT available on C*35903, C*35953, and C*35943 Models. 2 - Equipment group 2LT and 3LT available on C*35953 and C*35943 Models.	Reg., Ext. and Crew Cab			Ext. and Crew Cab	
			Work Truck 1WT[1]	LS 1LS[1]	LT1 1LT[1]	LT2 2LT[2]	LT3 3LT[2]
	UK6	**Audio system controls**, rear with 2 headphone jacks (headphones not included), power outlet and controls for volume, station selection and media 1 - Requires Crew Cab Models. Included and only available with (A95) front reclining bucket seats. 2 - Requires Crew Cab models.	--	--	A[1]	■[2]	■[2]
		Cigarette lighter, on instrument panel	S	S	S	S	S
		Coat hook, driver-side rear 1 - Also includes passenger-side coat hook on Extended and Crew Cab models.	S[1]	S[1]	S[1]	S[1]	S[1]
	D07	**Console**, floor with storage compartment and dual cup holders 1 - Included and only available with (A95) front reclining bucket seats.	--	--	A[1]	■	■
	DK7	**Console**, overhead mini with map lights 1 - Not available with (CF5) power sunroof.	--	--	■	■[1]	■[1]
	DK8	**Console**, overhead deluxe 1 - Included and only available with (CF5) power sunroof.	--	--	--	A[1]	A[1]
K34		**Cruise control**, electronic with set and resume speed	A	■	■	■	■
		Cup holders, front 1 - Also includes rear cupholders on Extended and Crew Cab models.	S[1]	S[1]	S[1]	S[1]	S[1]
C49		**Defogger**, rear-window electric 1 - Not available with (A28) sliding rear window or (C42) air conditioning delete. Available with Fleet and Government order types only. 2 - Not available with (A28) sliding rear window.	A[1]	■[2]	■[2]	■[2]	■[2]
AU3		**Door locks**, power 1 - Available with Fleet and Government order types only.	A[1]	A	■	■	■
		Driver Information Center that monitors numerous different systems depending on vehicle equipment	S	S	S	S	S
U42		**Entertainment system**, rear seat DVD player with LCD display and 2 sets of wireless headphones 1 - Requires Crew Cab models and (CJ2) dual-zone automatic air conditioning.	--	--	--	A[1]	A[1]
BG9		**Floor covering**, Black rubberized-vinyl 1 - Not available with (922) Medium Gray leather seating surfaces.	S	S	A[1]	--	--
B30		**Floor covering**, color-keyed carpeting with rubberized vinyl floor mats 1 - Available with Fleet and Government order types only. Not available with (**V) vinyl seat trim. 2 - Not available with (**V) vinyl interior trim. 3 - May be substituted with (BG9) rubberized-vinyl floor covering. Not available with (**V) vinyl seat trim.	A[1]	A[2]	□[3]	■	■
		Instrumentation, analog with speedometer, odometer with trip odometer, fuel level, voltmeter, engine temperature, oil pressure and tachometer	S	S	S	S	S

Free Flow RPO Code	Ref. Only RPO Code	Description 1 - Equipment groups 1WT, 1LS and 1LT available on C*35903, C*35953, and C*35943 Models. 2 - Equipment group 2LT and 3LT available on C*35953 and C*35943 Models.	Reg., Ext. and Crew Cab			Ext. and Crew Cab	
			Work Truck 1WT[1]	LS 1LS[1]	LT1 1LT[1]	LT2 2LT[2]	LT3 3LT[2]
		Lighting, interior with dome and reading lights, backlit instrument panel switches and door handle-activated illuminated entry	S	S	S	S	S
		Mirror, inside rearview manual day/night	S	S	--	--	--
	DF5	**Mirror**, inside rearview auto-dimming with 8-point compass and outside temperature display	--	--	■	■	■
UE1		**OnStar**, 1-year of Safe and Sound plan. Includes Automatic Notification of Air Bag Deployment, Stolen Vehicle Location Assistance, Emergency Services, Roadside Assistance, Remote Door Unlock, OnStar Vehicle Diagnostics, Hands-Free Calling, AccidentAssist and Remote Horn & Lights 1 - OnStar services require vehicle electrical system (including battery), wireless service and GPS satellite signals to be available and operating for features to function properly. OnStar acts as a link to existing emergency service providers. OnStar Vehicle Diagnostics available on most 2004 MY and newer GM vehicles. Diagnostic capability varies by model. Visit onstar.com for system limitations and details. Requires (UK3) steering-wheel mounted audio controls. Not available with a ship-to of Puerto Rico or the Virgin Islands.	--	--	A[1]	A[1]	A[1]
PDB		**OnStar Plus Package**, includes (U2K) XM Satellite Radio, (UE1) OnStar and (UK3) steering-wheel mounted audio controls 1 - Package does not include (U2K) XM Satellite Radio when ordered outside the 48 contiguous United States. Not available with a ship-to of Puerto Rico or the Virgin Islands.	--	--	A[1]	A[1]	A[1]
R6Q		**OnStar Plus Package discount not desired** 1 - Required when content within option package is ordered and entire package is not desired.	--	--	A[1]	A[1]	A[1]
		Power outlets, 2 auxiliary instrument panel-mounted with covers, 12-volt	S	S	S	S	S
	AU0	**Remote Keyless Entry**, with 2 transmitters, panic button and content theft alarm	--	--	■	■	■
	**V	**Seat trim**, vinyl	S	A	--	--	--
	**C	**Seat trim**, cloth 1 - Not available with Crew Cab models.	A[1]	A[1]	--	--	--
	**D	**Seat trim**, Custom Cloth	A	■	■	■	--
	**2	**Seat trim**, leather 1 - Not available on Regular Cab models. Extended Cab includes front leather seating surfaces with rear vinyl bench. Crew Cab includes front and rear leather-appointed seating surfaces.	--	--	A[1]	A[1]	■[1]
AE7		**Seats**, front 40/20/40 split-bench, 3-passenger, driver and front passenger manual reclining with outboard head restraints	S	A	--	--	--
AE7		**Seats**, front 40/20/40 split-bench, 3-passenger, driver and front passenger manual reclining, center fold-down armrest with storage, adjustable outboard head restraints and storage pockets on Extended Cab models 1 - Requires (**D) Custom Cloth seat trim.	A[1]	■[1]	■	--	--

Free Flow RPO Code	Ref. Only RPO Code	Description 1 - Equipment groups 1WT, 1LS and 1LT available on C*35903, C*35953, and C*35943 Models. 2 - Equipment group 2LT and 3LT available on C*35953 and C*35943 Models.	Reg., Ext. and Crew Cab Work Truck 1WT[1]	Reg., Ext. and Crew Cab LS 1LS[1]	Reg., Ext. and Crew Cab LT1 1LT[1]	Ext. and Crew Cab LT2 2LT[2]	Ext. and Crew Cab LT3 3LT[2]
A95		**Seats**, front bucket, includes (AG1) 6-way power driver seat adjuster, front passenger manual recline, adjustable outboard head restraints, inboard armrests and storage pockets 1 - Requires Extended or Crew Cab Models. Requires Fleet and Government order types only. Includes (D07) floor console and (UQ7) Bose Premium speaker system. Also includes (UK6) rear audio controls on Crew Cab Models. On 4WD Models, also requires (NP1) electronic shift transfer case.	--	--	A[1]	■	--
	AN3	**Seats**, front bucket, includes 10-way power driver and front passenger seat adjusters, 2-way power lumbar control, heated seat cushions and seatbacks, 2-position driver memory, adjustable outboard head restraints, floor console, dual inboard armrests and storage pockets	--	--	--	--	■
		Seats, rear 60/40 split-bench, 3-passenger, flat-folding (includes child seat top tether anchor) 1 - Not available with Regular Cab models.	S[1]	S[1]	S[1]	S	S
AG1		**Seat adjuster**, driver 6-way power 1 - Included with (**2) Seat trim, leather on Extended and Crew Cab Models. Included with (A95) front reclining bucket seats. 2 - With (AN3) front full-feature bucket seats, includes 10-way power seat adjusters.	--	--	A[1]	■	■[2]
	AG2	**Seat adjuster**, front passenger 10-way power 1 - Included and only available with (AN3) front full-feature bucket seats.	--	--	--	--	■[1]
DNH		**Regular production accessory**, Underseat storage, rear, lockable 1 - Requires Extended Cab models. For additional GM Accessory Offerings and Installation, please contact your local GM Accessory Distributor Installer (ADI).	A/D[1]	A/D[1]	A/D[1]	A/D[1]	A/D[1]
		Steering column, Tilt-Wheel, adjustable with brake/transmission shift interlock	S	S	S	S	S
		Steering wheel, includes theft-deterrent locking feature	S	S	--	--	--
	NP5	**Steering wheel**, leather-wrapped, Black with theft-deterrent locking feature	--	--	■	■	■
UK3		**Steering wheel controls**, mounted audio and Driver Information Center controls which provides access to enhanced Driver Information Center features and information	--	--	A	■	■
CF5		**Sunroof**, power, tilt-sliding with express-open and wind deflector, includes (UG1) Universal Home Remote 1 - Requires (CJ2) dual-zone automatic air conditioning. Not available with (VYU) Snow Plow Prep Package.	--	--	--	A[1]	A[1]
		Theft-deterrent system, PASSlock II	S	S	S	S	S
		Tools, mechanical jack and wheel wrench located in back of cab	S	S	S	S	S
	UG1	**Universal Home Remote** 1 - Included and only available with (CF5) power sunroof.	--	--	--	A[1]	A[1]

Free Flow RPO Code	Ref. Only RPO Code	Description 1 - Equipment groups 1WT, 1LS and 1LT available on C*35903, C*35953, and C*35943 Models. 2 - Equipment group 2LT and 3LT available on C*35953 and C*35943 Models.	Reg., Ext. and Crew Cab Work Truck 1WT[1]	Reg., Ext. and Crew Cab LS 1LS[1]	Reg., Ext. and Crew Cab LT1 1LT[1]	Ext. and Crew Cab LT2 2LT[2]	Ext. and Crew Cab LT3 3LT[2]
		Visors, driver and front passenger, padded with cloth trim, extenders, pocket on driver-side and vanity mirror on passenger-side, Shale-colored	S	S	S	S	S
		Warning tones, headlamp on, key-in-ignition, driver and passenger buckle up reminder and turn signal on	S	S	S	S	S
	A31	**Windows**, power with driver and front passenger Express-Down	--	--	■	■	■
		Windows, swing-out rear quarter 1 - Standard with Extended Cab models only.	S[1]	S[1]	S[1]	S[1]	S[1]
A28		**Window**, manual rear-sliding, deep-tinted 1 - Requires (AJ1) Solar-Ray deep-tinted glass. Deletes or not available with (C49) rear-window defogger when ordered. Not available with (ZW9) pickup box delete.	A[1]	A[1]	A[1]	A[1]	A[1]
U2K		**XM Satellite Radio**. With a wide variety of programming, XM has something to excite any driver. Whether you want to be entertained or informed, to laugh, think, or sing, XM has the perfect channel for you - coast-to-coast, and in digital-quality sound. 3 trial months - no obligation 1 - Available in the 48 contiguous United States. Required $12.95 monthly subscription sold separately. All fees and programming subject to change. Subscription subject to customer agreement. For more information, visit gm.xmradio.com.	--	--	A[1]	A[1]	A[1]

S = Standard Equipment A = Available -- (dashes) = Not Available D = ADI Available
■ = Included in Equipment Group □ = Included in Equipment Group but upgradeable

*Indicates availability of feature on multiple models. For example, it indicates feature availability on 2WD and 4WD Models or Rear wheel drive and All-wheel drive Models.

Codes listed in the shaded column titled Ref. Only RPO Code are for internal use only and should not be ordered.

Free Flow RPO Code	Ref. Only RPO Code	Description 1 - Equipment groups 1WT, 1LS and 1LT available on C*35903, C*35953, and C*35943 Models. 2 - Equipment group 2LT and 3LT available on C*35953 and C*35943 Models.	Reg., Ext. and Crew Cab			Ext. and Crew Cab	
			Work Truck 1WT[1]	LS 1LS[1]	LT1 1LT[1]	LT2 2LT[2]	LT3 3LT[2]
		Air dam, Gray	S	S	S	S	S
	VG3	Bumper, front chrome with Gray lower	S	S	S	S	S
	V43	Bumper, rear painted, step-style with pad 1 - Not available with (ZW9) pickup box delete.	S[1]	--	--	--	--
VB3		Bumper, rear chrome, step-style with pad 1 - Not available with (ZW9) pickup box delete.	A[1]	■[1]	■[1]	■[1]	■[1]
VF7		Bumper, rear delete (vehicles registered in certain states must have a rear bumper to be operated on their roads, consult local laws) 1 - Not available with (Z82) heavy-duty trailering equipment or (ZW9) pickup box delete.	A[1]	A[1]	A[1]	--	--
		Daytime Running Lamps, with automatic exterior lamp control	S	S	S	S	S
T96		Fog lamps, front, halogen 1 - With 2WD models requires (V76) front frame-mounted recovery hooks.	--	--	A[1]	■	■
		Glass, Solar-Ray light-tinted, all windows	S	S	--	--	--
AJ1		Glass, Solar-Ray deep-tinted (all windows except light-tinted glass on windshield and driver- and front passenger-side glass) 1 - With Extended Cab models, includes rear window and rear quarter windows. With (C49) rear-window defogger, includes light-tinted rear window.	A[1]	A[1]	■[1]	■[1]	■[1]
	TR3	Grille, color-keyed surround with chrome accent bar	S	S	S	S	S
		Headlamps, dual halogen composite with automatic exterior lamp control and flash-to-pass feature	S	S	S	S	S
U01		Lamps, Amber roof marker 1 - Standard on (C7W) 11,400 lbs. (5171 kg) GVWR only.	A[1]	A[1]	A[1]	A[1]	A[1]
		Lamps, dual cargo area lamps	S	S	S	S	S
	D44	Mirrors, outside manual, Black, manual-folding 1 - Standard on (C7W) 11,400 lbs. (5171 kg) GVWR only. Not available with (C6Y) 9600 lbs. (4354 kg) GVWR, (GEC) 9800 lbs. (4445 kg) GVWR or (C4M) 9900 lbs. (4491 kg) GVWR.	S[1]	S[1]	--	--	--
	DE2	Mirrors, outside manual, Black, manual-folding 1 - Standard on (C6Y) 9600 lbs. (4354 kg) GVWR, (GEC) 9800 lbs. (4445 kg) GVWR or (C4M) 9900 lbs. (4491 kg) GVWR. Not available with (C7W) 11,400 lbs. (5171 kg) GVWR.	S[1]	S[1]	--	--	--

Free Flow RPO Code	Ref. Only RPO Code	Description 1 - Equipment groups 1WT, 1LS and 1LT available on C*35903, C*35953, and C*35943 Models. 2 - Equipment group 2LT and 3LT available on C*35953 and C*35943 Models.	Reg., Ext. and Crew Cab			Ext. and Crew Cab	
			Work Truck 1WT[1]	LS 1LS[1]	LT1 1LT[1]	LT2 2LT[2]	LT3 3LT[2]
DF2		Mirrors, outside high-visibility camper-style, Black, manual-folding and extension, includes a dual-segment mirror on the driver-side that provides enhanced wide angle capacity (not recommended for bodies or trailers wider than 86" [218.4 cm])	A	A	--	--	--
	DL8	Mirrors, outside heated power-adjustable, Black, manual-folding 1 - Upgradeable to (DL3) outside heated, power-adjustable, power-folding mirrors (C6Y) 9600 lbs. (4354 kg) GVWR, (GEC) 9800 lbs. (4445 kg) GVWR, or (C4M) 9900 lbs. (4491 kg) GVWR is ordered or (DPN) outside vertical camper mirrors.	--	--	□[1]	□[1]	□[1]
DL3		Mirrors, outside heated power-adjustable, power-folding and driver-side auto-dimming, Black with integrated turn signal indicators 1 - Requires (C6Y) 9600 lbs. (4354 kg) GVWR, (GEC) 9800 lbs. (4445 kg) GVWR or (C4M) 9900 lbs. (4491 kg) GVWR. Curb-tilt feature requires (UK3) steering-wheel mounted audio controls. 2 - Requires (C6Y) 9600 lbs. (4354 kg) GVWR, (GEC) 9800 lbs. (4445 kg) GVWR or (C4M) 9900 lbs. (4491 kg) GVWR. Includes curb-tilt when (UK3) steering-wheel mounted audio controls is ordered.	--	--	A[1]	A[2]	A[2]
DPN		Mirrors, outside heated power-adjustable vertical camper manual-folding and extension, integrated turn signal indicators and lower convex spotter glass (convex glass is not heated)	--	--	A	A	A
	ZY1	Paint, solid	S	S	S	S	S
	E63	Pickup box, Fleetside 1 - Not available with CC35903 models.	S[1]	S[1]	S[1]	S	S
ZW9		Pickup box, delete 1 - Standard on CC35903 models.	A[1]	A[1]	A[1]	A	A
	V76	Recovery hooks, front, frame-mounted	S	S	S	S	S
BVE		Regular production accessory, Assist steps, chrome plated tubular, stainless steel 1 - Not available with (ZW9) pickup box delete. For additional GM Accessory Offerings and Installation, please contact your local GM Accessory Distributor Installer (ADI).	A/D[1]	A/D[1]	A/D[1]	A/D[1]	A/D[1]
BVS		Regular production accessory, Assist steps, Black coated tubular, stainless steel 1 - Not available with (ZW9) pickup box delete. For additional GM Accessory Offerings and Installation, please contact your local GM Accessory Distributor Installer (ADI).	A/D[1]	A/D[1]	A/D[1]	A/D[1]	A/D[1]
PPB		Regular production accessory, Pickup bed extender, brushed aluminum 1 - Not available with (ZW9) pickup box delete. For additional GM Accessory Offerings and Installation, please contact your local GM Accessory Distributor Installer (ADI).	A/D[1]	A/D[1]	A/D[1]	A/D[1]	A/D[1]
E95		Regular production accessory, Tonneau cover, Black, soft 1 - Not available with (ZW9) pickup box delete. For additional GM Accessory Offerings and Installation, please contact your local GM Accessory Distributor Installer (ADI).	A/D[1]	A/D[1]	A/D[1]	A/D[1]	A/D[1]

Free Flow RPO Code	Ref. Only RPO Code	Description 1 - Equipment groups 1WT, 1LS and 1LT available on C*35903, C*35953, and C*35943 Models. 2 - Equipment group 2LT and 3LT available on C*35953 and C*35943 Models.	Reg., Ext. and Crew Cab			Ext. and Crew Cab	
			Work Truck 1WT[1]	LS 1LS[1]	LT1 1LT[1]	LT2 2LT[2]	LT3 3LT[2]
EN6		**Regular production accessory**, Tonneau cover, Black, hard, folding, lockable 1 - Not available with (ZW9) pickup box delete. For additional GM Accessory Offerings and Installation, please contact your local GM Accessory Distributor Installer (ADI).	A/D[1]	A/D[1]	A/D[1]	A/D[1]	A/D[1]
	QER	Tires, LT265/75R16E on-/off-road, blackwall 1 - Requires CC35903 models, CK35903 and (C4M) 9900 lbs. (4491 kg) GVWR, C*35943 and (C4M) 9900 lbs. (4491 kg) GVWR or CC35953 models and (GEC) 9800 lbs. (4445 kg) GVWR or (C4M) 9900 lbs. (4491 kg) GVWR or CK35953 models and (C4M) 9900 lbs. (4491 kg) GVWR. Includes 5 tires with (E63) Fleetside pickup box. Includes 4 tires with (ZW9) pickup box delete. 2 - Requires C*35943 and (C4M) 9900 lbs. (4491 kg) GVWR or CK35953 models and (C4M) 9900 lbs. (4491 kg) GVWR or CC35953 models and (GEC) 9800 lbs. (4445 kg) GVWR or (C4M) 9900 lbs. (4491 kg) GVWR. Includes 5 tires with (E63) Fleetside pickup box. Includes 4 tires with (ZW9) pickup box delete.	S[1]	S[1]	S[1]	S[2]	S[2]
XYK		Tires, LT215/85R16D all-season, blackwall 1 - Requires and standard on CK35903 and (C7W) 11,400 lbs. (5171 kg) GVWR, CC35953 or CC35943 models. Not available with CK35903 models and (VYU) Snow Plow Prep Package. Includes 7 tires with (E63) Fleetside pickup box. Includes 6 tires with (ZW9) pickup box delete. Not available with (C6Y) 9600 lbs. (4354 kg) GVWR, (GEC) 9800 lbs. (4445 kg) GVWR or (C4M) 9900 lbs. (4491 kg) GVWR.	A[1]	A[1]	A[1]	A[1]	A[1]
XEC		Tires, LT215/85R16E all-season, blackwall 1 - Required and standard on CK35903 models and (VYU) Snow Plow Prep Package or CK35953 or CK35943 models and (C7W) 11,400 lbs. (5171 kg) GVWR. Includes 7 tires with (E63) Fleetside pickup box. Includes 6 tires with (ZW9) pickup box delete. Not available with (C6Y) 9600 lbs. (4354 kg) GVWR, (GEC) 9800 lbs. (4445 kg) GVWR or (C4M) 9900 lbs. (4491 kg) GVWR.	A[1]	A[1]	A[1]	A[1]	A[1]
XEF		Tires, LT215/85R16E on-/off-road, blackwall 1 - Includes 7 Tires with (E63) Fleetside pickup box. Includes 6 tires with (ZW9) pickup box delete. Not available with (C6Y) 9600 lbs. (4354 kg) GVWR, (GEC) 9800 lbs. (4445 kg) GVWR or (C4M) 9900 lbs. (4491 kg) GVWR.	A[1]	A[1]	A[1]	A[1]	A[1]
ZER		Tire, spare LT265/75R16E on-/off-road, blackwall, located at rear underbody of vehicle 1 - Requires CC35903 models, CK35903 models and (C4M) 9900 lbs. (4491 kg) GVWR, C*35943 models and (C4M) 9900 lbs. (4491 kg) GVWR or CK35953 models and (C4M) 9900 lbs. (4491 kg) GVWR or CC35953 models and (GEC) 9800 lbs. (4445 kg) GVWR or (C4M) 9900 lbs. (4491 kg) GVWR. Requires (ZW9) pickup box delete and (QER) LT265/75R16E on-/off-road, blackwall tires. 2 - Requires C*35943 or CK35953 models, (C4M) 9900 lbs. (4491 kg) GVWR or CC35953 models and (GEC) 9800 lbs. (4445 kg) GVWR or (C4M) 9900 lbs. (4491 kg) GVWR. Requires (ZW9) pickup box delete and (QER) LT265/75R16E on-/off-road, blackwall tires.	A[1]	A[1]	A[1]	A[2]	A[2]

Free Flow RPO Code	Ref. Only RPO Code	Description 1 - Equipment groups 1WT, 1LS and 1LT available on C*35903, C*35953, and C*35943 Models. 2 - Equipment group 2LT and 3LT available on C*35953 and C*35943 Models.	Reg., Ext. and Crew Cab			Ext. and Crew Cab	
			Work Truck 1WT[1]	LS 1LS[1]	LT1 1LT[1]	LT2 2LT[2]	LT3 3LT[2]
ZYK		Tire, spare LT215/85R16D all-season, blackwall, located at rear underbody of vehicle 1 - Requires CK35903, CC35943 or CC35953 models and (ZW9) pickup box delete and (XYK) LT215/85R16D all-season blackwall tires. With CK35903, not available with (VYU) Snow Plow Prep Package. Not available with (C6Y) 9600 lbs. (4354 kg) GVWR, (GEC) 9800 lbs. (4445 kg) GVWR or (C4M) 9900 lbs. (4491 kg) GVWR. 2 - Requires CC35943 or CC35953 models and (ZW9) pickup box delete and (XYK) LT215/85R16D all-season blackwall tires. Not available with (C6Y) 9600 lbs. (4354 kg) GVWR, (GEC) 9800 lbs. (4445 kg) GVWR or (C4M) 9900 lbs. (4491 kg) GVWR.	A[1]	A[1]	A[1]	A[2]	A[2]
ZEC		Tire, spare LT215/85R16E all-season, blackwall, located at rear underbody of vehicle 1 - Requires CK35903 models and (VYU) Snow Plow Prep Package or CK35943 or CK35953 models, (ZW9) pickup box delete and (XEC) LT215/85R16E all-season blackwall tires. Not available with (C6Y) 9600 lbs. (4354 kg) GVWR, (GEC) 9800 lbs. (4445 kg) GVWR or (C4M) 9900 lbs. (4491 kg) GVWR. 2 - Requires CK35943 or CK35953 models and (ZW9) pickup box delete and (XEC) LT215/85R16E all-season blackwall tires. Not available with (C6Y) 9600 lbs. (4354 kg) GVWR, (GEC) 9800 lbs. (4445 kg) GVWR or (C4M) 9900 lbs. (4491 kg) GVWR.	A[1]	A[1]	A[1]	A[2]	A[2]
ZEF		Tire, spare LT215/85R16E, on-/off-road, blackwall, located at rear underbody of vehicle 1 - Requires (XEF) LT215/85R16E on-/off-road blackwall tires and (ZW9) pickup box delete. Not available with (C6Y) 9600 lbs. (4354 kg) GVWR, (GEC) 9800 lbs. (4445 kg) GVWR or (C4M) 9900 lbs. (4491 kg) GVWR.	A[1]	A[1]	A[1]	A[1]	A[1]
		Tire carrier, outside spare, winch-type mounted under frame at rear	S	S	S	S	S
SAF		**Spare tire lock**, keyed cylinder lock that utilizes same key as ignition and door 1 - Not available with (ZW9) pickup box delete.	A[1]	A[1]	A[1]	A[1]	A[1]
		Single rear wheels 1 - Standard on (C6Y) 9600 lbs. (4354 kg) GVWR, (GEC) 9800 lbs. (4445 kg) GVWR or (C4M) 9900 lbs. (4491 kg) GVWR. Not available with (C7W) 11,400 lbs. (5171 kg) GVWR .	S[1]	S[1]	S[1]	S[1]	S[1]
		Dual rear wheels 1 - Standard on (C7W) 11,400 lbs. (5171 kg) GVWR only. Not available with (C6Y) 9600 lbs. (4354 kg) GVWR, (GEC) 9800 lbs. (4445 kg) GVWR or (C4M) 9900 lbs. (4491 kg) GVWR.	S[1]	S[1]	S[1]	S[1]	S[1]
		Wheels, 6 - 16" x 6.5" (40.6 cm x 16.5 cm) 8-lug painted steel (dual rear), includes painted center caps and steel spare 1 - Requires and only available with (C7W) 11,400 lbs. (5171 kg) GVWR (dual rear wheel)	S[1]	--	--	--	--
	P06	**Wheels**, 6 - 16" x 6.5" (40.6 cm x 16.5 cm) 8-lug steel, with bright metal rings, chrome center caps and steel spare 1 - Requires and only available with (C7W) 11,400 lbs. (5171 kg) GVWR (dual rear wheel)	--	■[1]	■[1]	■[1]	■[1]

2007 Chevrolet Truck Silverado 3500 EXTERIOR
Classic

Free Flow RPO Code	Ref. Only RPO Code	Description 1 - Equipment groups 1WT, 1LS and 1LT available on C*35903, C*35953, and C*35943 Models. 2 - Equipment group 2LT and 3LT available on C*35953 and C*35943 Models.	Reg., Ext. and Crew Cab			Ext. and Crew Cab	
			Work Truck 1WT[1]	LS 1LS[1]	LT1 1LT[1]	LT2 2LT[2]	LT3 3LT[2]
	QC1	**Wheels**, 4 - 16" x 7.0" (40.6 cm x 17.8 cm) 8-lug steel (single rear wheel) 1 - Center cap is Argent. Standard with (C6Y) 9600 lbs. (4354 kg) GVWR, (GEC) 9800 lbs. (4445 kg) GVWR or (C4M) 9900 lbs. (4491 kg) GVWR. 2 - Center cap is chrome. Standard with (C6Y) 9600 lbs. (4354 kg) GVWR, (GEC) 9800 lbs. (4445 kg) GVWR or (C4M) 9900 lbs. (4491 kg) GVWR.	S[1]	S[1]	S[2]	S[2]	S[2]
NZ7		**Wheels**, 4 - 16" x 7" (40.6 cm x 17.8 cm) 8-lug chrome-clad steel 1 - Requires CK35943 models and (C4M) 9900 lbs. (4491 kg) GVWR.	--	--	A[1]	A[1]	A[1]
	B71	**Wheel flares**, front only 1 - With (GEC) 9800 lbs. (4445 kg) GVWR or (C4M) 9900 lbs. (4491 kg) GVWR includes rear wheel flares unless (ZW9) pickup box delete is ordered.	S[1]	S[1]	S[1]	S[1]	S[1]
		Wipers, front intermittent wet-arm with pulse washers	S	S	S	S	S

2007 Chevrolet Truck Silverado 3500 MECHANICAL
Classic

S = Standard Equipment A = Available -- (dashes) = Not Available D = ADI Available
■ = Included in Equipment Group □ = Included in Equipment Group but upgradeable

*Indicates availability of feature on multiple models. For example, it indicates feature availability on 2WD and 4WD Models or Rear wheel drive and All-wheel drive Models.

Codes listed in the shaded column titled Ref. Only RPO Code are for internal use only and should not be ordered.

Free Flow RPO Code	Ref. Only RPO Code	Description 1 - Equipment groups 1WT, 1LS and 1LT available on C*35903, C*35953, and C*35943 Models. 2 - Equipment group 2LT and 3LT available on C*35953 and C*35943 Models.	Reg., Ext. and Crew Cab			Ext. and Crew Cab	
			Work Truck 1WT[1]	LS 1LS[1]	LT1 1LT[1]	LT2 2LT[2]	LT3 3LT[2]
K47		**Air cleaner**, high-capacity 1 - Included with (LBZ) Duramax 6.6L Turbo Diesel V8 engine, (Z82) heavy-duty trailering equipment or (VYU) Snow Plow Prep Package.	A[1]	A[1]	A[1]	A[1]	A[1]
KL5		**Alternative fuel conversions**, conversion-ready engine, includes internal modifications for operation with natural or propane gas 1 - Requires (LQ4) Vortec 6.0L V8 SFI engine and (MT1) heavy-duty 4-speed automatic transmission.	A[1]	A[1]	A[1]	A[1]	A[1]
	K68	**Alternator**, 105 amps 1 - Not available with (VYU) Snow Plow Prep Package.	S[1]	S[1]	S[1]	S[1]	S[1]
	KG3	**Alternator**, 145 amps 1 - Included and only available with (VYU) Snow Plow Prep Package or (LBZ) Duramax 6.6L Turbo Diesel V8 engine.	A[1]	A[1]	A[1]	A[1]	A[1]
		Battery, heavy-duty 600 cold-cranking amps, maintenance-free with rundown protection and retained accessory power 1 - Not standard with (LBZ) Duramax 6.6L Turbo Diesel V8 engine.	S[1]	S[1]	S[1]	S[1]	S[1]
TP2		**Battery**, auxiliary heavy-duty 600 cold-cranking amps, maintenance-free 1 - Not available with (LBZ) Duramax 6.6L Turbo Diesel V8 engine.	A[1]	A[1]	A[1]	A[1]	A[1]
	TQ3	**Battery**, heavy-duty dual 770 cold-cranking amps, maintenance-free with rundown protection and retained accessory power 1 - Included and only available with (LBZ) Duramax 6.6L Turbo Diesel V8 engine.	A[1]	A[1]	A[1]	A[1]	A[1]
		Brakes, 4-wheel antilock, 4-wheel disc	S	S	S	S	S
	KC4	**Cooling**, external engine oil cooler, heavy-duty air-to-oil, integral to driver-side of radiator tank	S	S	S	S	S
	KNP	**Cooling**, auxiliary external transmission oil cooler, heavy-duty air-to-oil 1 - Included and only available with (MT1) heavy-duty 4-speed automatic transmission or (MW7) Allison 1000 6-speed automatic transmission.	A[1]	A[1]	A[1]	A[1]	A[1]
		Cooling, internal transmission oil cooler, water-to-oil, integral to driver-side of radiator tank 1 - Included and only available with (MT1) heavy-duty 4-speed automatic transmission or (MW7) Allison 1000 6-speed automatic transmission.	A[1]	A[1]	A[1]	A[1]	A[1]

Free Flow RPO Code	Ref. Only RPO Code	Description 1 - Equipment groups 1WT, 1LS and 1LT available on C*35903, C*35953, and C*35943 Models. 2 - Equipment group 2LT and 3LT available on C*35953 and C*35943 Models.	Reg., Ext. and Crew Cab			Ext. and Crew Cab	
			Work Truck 1WT[1]	LS 1LS[1]	LT1 1LT[1]	LT2 2LT[2]	LT3 3LT[2]
G80		**Differential**, heavy-duty automatic locking rear 1 - Standard on (C6Y) 9600 lbs. (4354 kg) GVWR, (GEC) 9800 lbs. (4445 kg) GVWR, or (C4M) 9900 lbs. (4491 kg) GVWR.	A[1]	A[1]	A[1]	A[1]	A[1]
FE9		**Emissions**, Federal requirements	A	A	A	A	A
YF5		**Emissions**, California state requirements	A	A	A	A	A
NE1		**Emissions**, Maine, Massachusetts, New York or Vermont state requirements	A	A	A	A	A
NB8		**Emissions override**, California, Massachusetts or New York (for vehicles ordered by dealers in states of California, Massachusetts or New York with Federal emissions) 1 - Requires (FE9) Federal emissions requirements.	A[1]	A[1]	A[1]	A[1]	A[1]
NC7		**Emissions override**, Federal (for vehicles ordered by dealers in Federal emission states with California, New York, Vermont, Massachusetts or Maine emissions; may also be used by dealers in states of California, New York, Vermont, Massachusetts or Maine to order different state-specific emissions) 1 - Requires (YF5) California state emissions requirements or (NE1) New York, Vermont, Massachusetts or Maine state emissions requirements.	A[1]	A[1]	A[1]	A[1]	A[1]
K05		**Engine block heater** 1 - Included with (LBZ) Duramax 6.6L Turbo Diesel V8 engine.	A[1]	A[1]	A[1]	A[1]	A[1]
	LQ4	**Engine**, Vortec 6.0L V8 SFI (300 hp [223.8 kW] @ 4400 rpm, 360 lb-ft of torque [486.6 N-m] @ 4000 rpm)	S	S	S	S	S
L18		**Engine**, Vortec 8.1L V8 SFI (330 hp [245.8 kW] @ 4200 rpm, 450 lb-ft of torque [607.5 N-m] @ 3200 rpm) 1 - Not available with CC35903 models.	A[1]	A[1]	A[1]	A	A
LBZ		**Engine**, Duramax 6.6L Turbo Diesel V8 (360 hp [268.0 kW] @ 3200 rpm, 650 lb-ft of torque [881.0 N-m] @ 1600 rpm) 1 - Requires (MW7) Allison 1000 6-speed automatic transmission. Includes (TQ3) heavy-duty dual, 770 cold-cranking-amp batteries, (KG3) 145-amp alternator, (K47) high-capacity air cleaner and (K05) engine block heater. Not available with CC35903 models.	A[1]	A[1]	A[1]	A[1]	A[1]
V10		**Covers**, radiator grille and front bumper openings for diesel engines in winter weather 1 - Requires (LBZ) Duramax 6.6L Turbo Diesel V8 engine and is required on orders with "Ship To" locations within the following states: Maine, New Hampshire, Vermont, Minnesota, North Dakota, South Dakota, Montana, Alaska, Idaho, Wisconsin, Wyoming, Michigan, Colorado and New York.	A[1]	A[1]	A[1]	A[1]	A[1]
		Exhaust, aluminized stainless-steel muffler and tailpipe	S	S	S	S	S
		Frame, hydroformed ladder-type	S	S	S	S	S
	C6Y	**GVWR**, 9600 lbs. (4354 kg) with single rear wheels 1 - Requires CC35903 models.	S[1]	S[1]	S[1]	--	--
GEC		**GVWR**, 9800 lbs. (4445 kg) with single rear wheels 1 - Requires CC35953 models and (LQ4) Vortec 6.0L V8 SFI engine.	A[1]	A[1]	A[1]	A[1]	A[1]

Free Flow RPO Code	Ref. Only RPO Code	Description 1 - Equipment groups 1WT, 1LS and 1LT available on C*35903, C*35953, and C*35943 Models. 2 - Equipment group 2LT and 3LT available on C*35953 and C*35943 Models.	Reg., Ext. and Crew Cab			Ext. and Crew Cab	
			Work Truck 1WT[1]	LS 1LS[1]	LT1 1LT[1]	LT2 2LT[2]	LT3 3LT[2]
C4M		**GVWR**, 9900 lbs. (4490 kg) with single rear wheels 1 - Requires CK35903, C*35943 or CK35953 models or CC35953 models and (L18) Vortec 8.1L V8 SFI engine or (LBZ) Duramax 6.6L Turbo Diesel V8 engine. 2 - Requires C*35943 or CK35953 models or CC35953 models and (L18) Vortec 8.1L V8 SFI engine or (LBZ) Duramax 6.6L Turbo Diesel V8 engine.	A[1]	A[1]	A[1]	A[2]	A[2]
C7W		**GVWR**, 11,400 lbs. (5171 kg) with dual rear wheels 1 - Not available with CC35903 models.	A[1]	A[1]	A[1]	A	A
PDN		**Heavy-Duty Power Package**, includes (LBZ) Duramax 6.6L Turbo Diesel engine, (MW7) Allison 1000 6-speed automatic transmission and (G80) heavy-duty rear locking differential	A	A	A	A	A
R6Y		**Heavy-Duty Power Package discount not desired**	A	A	A	A	A
GT4		**Rear axle**, 3.73 ratio 1 - Refer to Engine/Axle Chart for availability.	A[1]	A[1]	A[1]	A[1]	A[1]
	GT5	**Rear axle**, 4.10 ratio 1 - Refer to Engine/Axle Chart for availability.	S[1]	S[1]	S[1]	S[1]	S[1]
NZZ		**Skid Plate Package**, includes aluminum front underbody shield starting behind front bumper and running to first cross-member, protecting front underbody, oil pan, differential case and transfer case, frame-mounted shields 1 - Requires 4x4 models. Included with (VYU) Snow Plow Prep Package.	A[1]	A[1]	A[1]	A[1]	A[1]
VYU		**Snow Plow Prep Package**, includes 10-amp power for backup and roof emergency light, (KG3) 145-amp alternator, high-flow front bumper, forward lamp wiring harness, 1.65" (42 mm) access hole with grommet in front of dash panel, roof beacon lamp provisions with switch on the instrument panel, instrument panel jumper wiring harness for electric trailer brake controller, (K47) high-capacity air cleaner and (NZZ) Skid Plate Package 1 - Requires 4x4 models and not available with (CJ2) dual-zone automatic air conditioning. With models CK35903 and (C7W) 11,400 lbs. (5171 kg) GVWR (dual rear wheel) requires (XEC) LT215/85R16E all-season blackwall tires or (XEF) LT215/85R16E on-/off-road blackwall tires. With models CK35903 and (C4M) 9900 lbs. (4491 kg) GVWR (single rear wheel) not available with (LBZ) Duramax 6.6L Turbo Diesel V8 engine. With models CK35953 and (C7W) 11,400 lbs. (5171 kg) GVWR (dual rear wheel) not available with (LBZ) Duramax 6.6L Turbo Diesel V8 engine. With models CK35953 and (C4M) 9900 lbs. (4491 kg) GVWR (single rear wheel) requires (LQ4) Vortec 6.0L V8 engine. With models CK35943 requires (C7W) 11,400 lbs. (5171 kg) GVWR (dual rear wheel) and (LQ4) Vortec 6.0L V8 engine. With models CK35943 not available with (C4M) 9900 lbs. (4491 kg) GVWR (single rear wheel).	A[1]	A[1]	A[1]	A[1]	A[1]
		Steering, power	S	S	S	S	S
		Suspension, front independent with torsion bar and stabilizer bar	S	S	S	S	S
		Suspension, rear 3-stage springs	S	S	S	S	S
	Z85	**Suspension Package**, Handling/Trailering, heavy-duty, includes 36 mm piston monotube shocks	S	S	S	S	S

2007 Chevrolet Truck Silverado 3500 MECHANICAL
Classic

Free Flow RPO Code	Ref. Only RPO Code	Description 1 - Equipment groups 1WT, 1LS and 1LT available on C*35903, C*35953, and C*35943 Models. 2 - Equipment group 2LT and 3LT available on C*35953 and C*35943 Models.	Reg., Ext. and Crew Cab			Ext. and Crew Cab	
			Work Truck 1WT[1]	LS 1LS[1]	LT1 1LT[1]	LT2 2LT[2]	LT3 3LT[2]
Z82		**Trailering equipment**, heavy-duty, includes trailering hitch platform, 7-wire harness (harness includes wires for: park lamps, backup lamps, right turn, left turn, electric brake lead, battery and ground) with independent fused trailering circuits mated to a 7-way sealed connector, instrument panel jumper wiring harness for electric trailer brake controller and 1-way sealed connector for center high-mounted stop/brake lamp and (K47) high-capacity air cleaner 1 - Not available with (ZW9) pickup box delete or (VF7) rear bumper delete. 2 - Not available with (ZW9) pickup box delete.	A[1]	A[1]	A[1]	A[2]	A[2]
UY2		**Trailering wiring provisions**, for camper, fifth wheel and gooseneck trailer, includes additional 8-way wiring harness routed to front of pickup box and added 7-way sealed connector for the trailer harness 1 - Requires (Z82) heavy-duty trailering equipment.	A[1]	A[1]	A[1]	A[1]	A[1]
	NP2	**Transfer case**, floor-mounted shifter 1 - Standard with 4x4 models. Requires (AE7) front 40/20/40 split-bench seat.	S[1]	S[1]	S[1]	--	--
NP1		**Transfer case**, electronic shift with push-button controls 1 - Requires 4x4 models. Requires (MT1) heavy-duty 4-speed automatic transmission or (MW7) Allison 1000 6-speed automatic transmission.	--	--	A[1]	■[1]	■[1]
	MW3	**Transmission**, 5-speed manual with overdrive 1 - Requires (LQ4) Vortec 6.0L V8 SFI engine. Not available with (C6Y) 9600 lbs. (4354 kg) GVWR, (GEC) 9800 lbs. (4445 kg) GVWR or (C4M) 9900 lbs. (4491 kg) GVWR.	S[1]	S[1]	S[1]	--	--
MT1		**Transmission**, 4-speed automatic, heavy-duty, electronically controlled with overdrive and tow/haul mode. Includes (KNP) external transmission oil cooler 1 - Requires (LQ4) Vortec 6.0L V8 SFI engine. Standard on (C6Y) 9600 lbs. (4354 kg) GVWR, (GEC) 9800 lbs. (4445 kg) GVWR or (C4M) 9900 lbs. (4491 kg) GVWR. 2 - Requires (LQ4) Vortec 6.0L V8 SFI engine.	A[1]	A[1]	A[1]	■[2]	■[2]
MW7		**Transmission**, Allison 1000 6-speed automatic, electronically controlled with overdrive, electronic engine grade braking and tow/haul mode. Includes (KNP) external transmission oil cooler 1 - Requires (LBZ) Duramax 6.6L Turbo Diesel V8 engine or (L18) Vortec 8.1L V8 SFI engine.	A[1]	A[1]	A[1]	A[1]	A[1]

2007 Chevrolet Truck Silverado 3500 ENGINE/AXLE
Classic

S = Standard Equipment A = Available – (dashes) = Not Available
■ = Included in Equipment Group □ = Included in Equipment Group but upgradeable

*Indicates availability of feature on multiple models. For example, it indicates feature availability on 2WD and 4WD Models or Rear wheel drive and All-wheel drive Models.

		Transmissions			Axles		GVWR lbs. (kg)			
Model	Engine	MW3 5-Speed Manual with OD[1]	MT1 4-Speed Automatic HD	MW7 Allison 1000 6-Speed Automatic with OD	GT4 3.73	GT5 4.10	C6Y 9600 (4354)	GEC 9800 (4445)	C4M 9900 (4490)	C7W 11,400 (5171)
CC35903	LQ4 Vortec 6.0L V8 SFI	--	S	--	--	S	S	--	--	--
CK35903	LQ4 Vortec 6.0L V8 SFI	S[2]	A	--	--	S	--	--	A	A
	L18 Vortec 8.1L V8 SFI	--	--	A	--	S	--	--	A	A
	LBZ Duramax 6.6L Turbo Diesel V8	--	--	A	A	--	--	--	A	A
CC35943/ CC35953	LQ4 Vortec 6.0L V8 SFI	A[5]	S	--	--	S	--	A[3]	A[4]	A
	L18 Vortec 8.1L V8 SFI	--	--	A	--	A	--	--	A	A
	LBZ Duramax 6.6L Turbo Diesel V8	--	--	A	A	--	--	--	A	A
CK35943/ CK35953	LQ4 Vortec 6.0L V8 SFI	A[2]	S	--	--	S	--	--	A	A
	L18 Vortec 8.1L V8 SFI	--	--	A	--	A	--	--	A	A
	LBZ Duramax 6.6L Turbo Diesel V8	--	--	A	A	--	--	--	A	A

1 - Not available with (**2) Leather seat trim. - Requires (AE7) front 40/20/40 split-bench seats.
2 - Not available with (C4M) 9900 lbs. (4491 kg) GVWR.
3 - Requires CC35953 Models.
4 - Requires CC35943 Models.
5 - Not available with (GEC) 9800 lbs. (4445 kg) GVWR or (C4M) 9900 lbs. (4491 kg) GVWR.

2007 Chevrolet Truck Silverado 3500 Classic — COLOR AND TRIM - SOLID PAINT ZY1

S = Standard Equipment A = Available -- (dashes) = Not Available
■ = Included in Equipment Group □ = Included in Equipment Group but upgradeable

*Indicates availability of feature on multiple models. For example, it indicates feature availability on 2WD and 4WD Models or Rear wheel drive and All-wheel drive Models.

Decor Level	Seat Type	Seat Code	Seat Trim	Interior		
				Tan	Dark Charcoal	Medium Gray
Work Truck/ LS	Front 40/20/40 split-bench without fold-down armrest	AE7	Vinyl	52V	69V	--
Work Truck/ LS	Front 40/20/40 split-bench without fold-down armrest	AE7	Cloth	52C	69C	--
Work Truck/ LS/ LT1	Front 40/20/40 reclining split-bench with fold-down armrest	AE7	Custom Cloth	52D	69D	--
LT1	Front 40/20/40 reclining split-bench with fold-down armrest	AE7	Custom Leather[2]	522	692	922
LT1/ LT2	Front power buckets	A95[1]	Custom Cloth	52D	69D	--
LT1/ LT2	Front power buckets	A95[1]	Custom Leather[2]	522	692	922
LT3	Front power reclining full-feature buckets	AN3	Custom Leather[2]	522	692	922

Exterior Solid Paint	Color Code	Touch Up Paint Number	Interior			Wheel Flare Color LT
			Tan	Dark Charcoal	Medium Gray	
Sandstone Metallic[4]	15U	WA-929L	A	A	A	Sandstone Metallic
Graystone Metallic	16U	WA-213M	A	A	A	Graystone Metallic
Dark Blue Metallic	25U	WA-722J	A	A	A	Black
Black	41U	WA-8555	A	A	A	Black
Blue Granite Metallic	46U	WA-928L	A	A	A	Black
Dark Green Metallic[4]	47U	WA-9539	A	A	A	Dark Green Metallic
Summit White	50U	WA-8624	A	A	A	Summit White
Silver Birch Metallic	59U	WA-926L	--	A	A	Silver Birch Metallic
Sport Red Metallic[3]	63U	WA-817K	A	A	A	Black
Victory Red	74U	WA-9260	A	A	A	Black

Above interior trim combinations are the only combinations allowed.
Note: Wheel flares are Black on Work Truck and LS Models.
1 - LT1 requires Fleet or Government order types.
2 - Not available with Regular Cab Models or Manual Transmissions. - Leather seating surfaces on Extended Cab and Leather appointed, front and rear on Crew Cab Models.
3 - Not available with Work Truck or LS Models.
4 - Not available with Crew Cab Models.

2007 Chevrolet Truck Silverado 3500 Classic — COLOR AND TRIM - SEO SOLID PAINT

S = Standard Equipment A = Available -- (dashes) = Not Available
■ = Included in Equipment Group □ = Included in Equipment Group but upgradeable

*Indicates availability of feature on multiple models. For example, it indicates feature availability on 2WD and 4WD Models or Rear wheel drive and All-wheel drive Models.

Decor Level	Seat Type	Seat Code	Seat Trim	Interior		
				Tan	Dark Charcoal	Medium Gray
Work Truck/ LS	Front 40/20/40 split-bench without fold-down armrest	AE7	Vinyl	52V	69V	--
Work Truck/ LS	Front 40/20/40 split-bench without fold-down armrest	AE7	Cloth	52C	69C	--
Work Truck/ LS/ LT1	Front 40/20/40 reclining split-bench with fold-down armrest	AE7	Custom Cloth	52D	69D	--
LT1	Front 40/20/40 reclining split-bench with fold-down armrest	AE7	Custom Leather[1]	522	692	922
LT1/ LT2	Front power buckets	A95[2]	Custom Cloth	52D	69D	--
LT1/ LT2	Front power buckets	A95[2]	Custom Leather[1]	522	692	922
LT3	Front power reclining full-feature buckets	AN3	Custom Leather[1]	522	692	922

Exterior Solid Paint	Color Code	Touch Up Paint Number	Interior		
			Tan	Dark Charcoal	Medium Gray
Yellow	none	WA-5248	A	A	A
Blue Metallic	none	WA-5405	A	A	A
Yellow	none	WA-5445	A	A	A
Yellow	none	WA-5456	A	A	A
Blue	none	WA-5663	A	A	A
Green - Low Gloss	none	WA-6237	A	A	A
Tan - Low Gloss	none	WA-6238	A	A	A
Blue	none	WA-7154	A	A	A
Blue Metallic	none	WA-7159	A	A	A
Gray Metallic	none	WA-7840	A	A	A
Green	none	WA-7941	A	A	A
Green, Woodland	9V5	WA-9015	A	A	A
Doeskin Tan	9V9	WA-9403	A	A	A
Orange	none	WA-9408	A	A	A
Yellow	none	WA-9414	A	A	A
Tangier Orange	9W4	WA-9417	A	A	A

Orange	none	WA-9419	A	A	A
Indigo Blue	none	WA-9792	A	A	A
NEW! Brown	none	WA-195E	A	A	A
Light Autumnwood Metallic	none	WA-228A	A	A	A
Wheatland Yellow	9W3	WA-253A	A	A	A
Dark Toreador Red	none	WA-334D	A	A	A
Pewter	none	WA-382E	A	A	A
Blue	none	WA-769H	A	A	A
Orange	none	WA-770H	A	A	A
Green	none	WA-5758	A	A	A
NEW! Arrival Blue	none	WA-815K	A	A	A
NEW! Blue	none	WA-454N	A	A	A

All wheel flares, mirrors, body side moldings, door handles, bumpers and fascia will be Black.

1 - Not available with Regular Cab Models. - Leather seating surfaces on Extended Cab and Leather appointed, front and rear on Crew Cab Models.

2 - LT1 requires Fleet or Government order types.

S = Standard Equipment A = Available -- (dashes) = Not Available D = ADI Available
■ = Included in Equipment Group □ = Included in Equipment Group but upgradeable

*Indicates availability of feature on multiple models. For example, it indicates feature availability on 2WD and 4WD Models or Rear wheel drive and All-wheel drive Models.

Codes listed in the shaded column titled Ref. Only RPO Code are for internal use only and should not be ordered.

Free Flow RPO Code	Ref. Only RPO Code	Description 1 - Equipment groups 1WT, 1LS and 1LT available on C*35903, C*35953, and C*35943 Models. 2 - Equipment group 2LT and 3LT available on C*35953 and C*35943 Models.	Reg., Ext. and Crew Cab			Ext. and Crew Cab	
			Work Truck 1WT[1]	LS 1LS[1]	LT1 1LT[1]	LT2 2LT[2]	LT3 3LT[2]
		Interior					
6C7		**Console, roof with reading lamps (MSRP = $55.00)** Provides a short interior roof console with spot reading lamps and up-level headliner.	A	A	--	--	--
5B5		**Power windows and mirrors (MSRP = $738.00) with Regular Cab and Extended Cab Models (MSRP = $815.00) with Crew Cab Models** Provides power driver and passenger windows on a base trim level, includes SEO (5M1) LH and RH outside power adjustable, manual folding, non-heated, non-extendable mirrors and up level door panels. The mirror head is the same size and configuration as the base power mirror on LT Décor. **1 - Requires RPO (AU3) power programmable door locks. Power mirrors can be upgraded to SEO (6P3) remote control, power-extendable camper mirrors.**	A[1]	A[1]	--	--	--
8Q3		**Rear seat delete (MSRP = -$375.00 Credit)** Provides deletion of the rear seat on Extended Cab Pickup and Chassis Cabs. Exposed areas will remain untrimmed. **1 - Available on models C*35953. Requires RPO (AE7) front 40/20/40 split-bench seat and available with (9U3) front individual cloth seats or (9S1) front individual vinyl seats.**	A[1]	A[1]	--	--	--
9U4		**Remote keyless entry (MSRP = $170.00)** Provides remote keyless entry on LS Décor or Work Truck Décor pick-up trucks. Includes two transmitters, and deletes the lock cylinder on the right hand door. **1 - Requires RPO (AU3) power door locks and SEO (5B5) power windows and mirrors.**	A[1]	A[1]	--	--	--

Free Flow RPO Code	Ref. Only RPO Code	Description 1 - Equipment groups 1WT, 1LS and 1LT available on C*35903, C*35953, and C*35943 Models. 2 - Equipment group 2LT and 3LT available on C*35953 and C*35943 Models.	Reg., Ext. and Crew Cab Work Truck 1WT[1]	 LS 1LS[1]	 LT1 1LT[1]	Ext. and Crew Cab LT2 2LT[2]	 LT3 3LT[2]
9U3		**Seats, individual cloth (MSRP = No Charge) on Regular or Extended Cabs with Work Truck Decor, (MSRP = -$282.00 Credit) on Regular and Extended Cabs with LS Decor, (MSRP = $282.00) on Crew Cabs with Work Truck Decor (MSRP = No Charge) on Crew Cabs with LS Decor** Driver and passenger front individual seats in cloth trim (derived from RPO (AE7) 40/20/40 Split Bench with center 20" section removed). Does not include manual lumbar. Seats are manual, not power. Does not include a floor or roof console. Cloth rear seat with trim matching front seats will be provided on Extended and Crew Cabs. **1 - Requires trim codes (69C) Dark Charcoal or (52C) Tan on Regular or Extended Cab models. Requires trim codes (69D) Dark Charcoal or (52D) Tan on Crew Cab models. Available with (8Q3) rear seat delete. Not available with RPO (AG1) 6-way power driver seat adjuster.**	A[1]	A[1]	--	--	--
9S1		**Seats, vinyl bucket (MSRP = No Charge) with Work Truck and (MSRP = -$282.00) with LS Decor** Driver and passenger front individual seats in vinyl trim (derived from AE7) 40/20/40 Split Bench with center "20" section removed. Does not include manual lumbar. Seats are manual, not power. Does not include a floor or roof console. Standard vinyl rear seat with trim matching front seats will be provided on Extended Cabs. **1 - Requires Trim codes (69V) Dark Charcoal or (52V) Tan. Available with (8Q3) rear seat delete. Not available with RPO (AG1) 6-way power driver seat adjuster.**	A[1]	A[1]	--	--	--
9R3		**Sound system, delete (MSRP = No Charge)** Deletes the base sound system and provides a storage compartment and a driver alert chime-tone module Retains the antenna and base speaker system. **1 - Requires a Fleet order type.**	A[1]	A[1]	--	--	--
9R0		**Sound system, ETR AM/FM stereo with cassette (MSRP = $150.00) with Work Truck and (MSRP = No Charge) with LS or LT1 Decor** AM/FM stereo with cassette and digital clock, no CD player. Replaces the base radio. **1 - Requires a Fleet or Government sales order. Requires RPO (AE7) front 40/20/40 split-bench seat on 1LT. Not available with RPO (UK3) steering-wheel mounted audio controls, (UE1) OnStar or (PDB) OnStar Plus Package.**	A[1]	A[1]	A[1]	--	--
		Exterior					
8S3		**Backup alarm (MSRP = $103.00)** 97 decibels back-up alarm. **1 - Requires RPO (LQ4) Vortec 6.0L V8 SFI engine or RPO (L18) Vortec 8.1L V8 SFI engine.**	A[1]	A[1]	A[1]	A[1]	A[1]

Free Flow RPO Code	Ref. Only RPO Code	Description 1 - Equipment groups 1WT, 1LS and 1LT available on C*35903, C*35953, and C*35943 Models. 2 - Equipment group 2LT and 3LT available on C*35953 and C*35943 Models.	Reg., Ext. and Crew Cab Work Truck 1WT[1]	 LS 1LS[1]	 LT1 1LT[1]	Ext. and Crew Cab LT2 2LT[2]	 LT3 3LT[2]
8E9		**Bumper, front, painted White (MSRP = $45.00)** White painted front bumper in lieu of standard chrome. **1 - Requires RPO (ZW9) pickup box delete, RPO (VF7) rear bumper delete, RPO (E63) Fleetside pickup box and RPO (V43) rear bumper. Not available with models C*35943 or RPO (VB3) rear, chrome step bumper.**	A[1]	A[1]	--	--	--
6P3		**Camper Mirrors, power adjustable glass, manual extendable, non-heated (MSRP = $238.00)** Alternative mirrors replacing mirrors that are standard with SEO 5B5 Power windows and mirrors on a base decor truck. Right and left hand outside mirrors consisting of 50 square inch flat mirror surface positioned over a 20 square inch convex mirror surface with a common head. Includes turn signals in mirror glass. **1 - Requires RPO (AU3) power door locks and SEO (5B5) power windows and mirrors be ordered and priced in addition to SEO (6P3).**	A[1]	A[1]	--	--	--
5V1		**Carrier with spare wheel - no tire (MSRP = $82.00)** Provides a spare wheel and tire carrier with a spare wheel but with no spare tire. **1 - Requires RPO (ZW9) pickup box delete. Not available with RPO (Z**) spare tire.**	A[1]	A[1]	A[1]	A[1]	A[1]
9R1		**Decal delete, Pickup bed (MSRP = No Charge)** Deletes the "4x4" or "Z71" decal from the side of the Pickup bed. **1 - Requires 4x4 models and RPO (E63) Fleetside pickup box. Not available with SEO (8F2) ornamentation delete.**	A[1]	A[1]	A[1]	A[1]	A[1]
9M4		**Decal delete, tailgate (MSRP = No Charge)** Deletes the nameplate decal on the Pick-up bed tailgate. **1 - Requires RPO (E63) Fleetside pickup box. Not available with SEO (8F2) ornamentation delete.**	A[1]	A[1]	--	--	--
5Z5		**Hubcap delete (MSRP = -$15.00 Credit) with RPO (C4M) GVWR, 9900 lbs. (4490 kg) and (MSRP = -$18.00 Credit) with RPO (C7W) GVWR, 11,400 lbs (5171 kg)** Deletes decorative cap at center of wheel.	A	--	--	--	--
8V2		**Jack and tools delete (MSRP = -$32.00 Credit)** Deletes the jack and tire change tools that are standard. **1 - Requires a Fleet or Government order type.**	A[1]	A[1]	A[1]	A[1]	A[1]
8X1		**Label, fasten safety belts (MSRP = $2.00)** "Fasten Safety Belts" reminder label on side door window glass.	A	A	A	A	A

Free Flow RPO Code	Ref. Only RPO Code	Description 1 - Equipment groups 1WT, 1LS and 1LT available on C*35903, C*35953, and C*35943 Models. 2 - Equipment group 2LT and 3LT available on C*35953 and C*35943 Models.	Reg., Ext. and Crew Cab			Ext. and Crew Cab	
			Work Truck 1WT[1]	LS 1LS[1]	LT1 1LT[1]	LT2 2LT[2]	LT3 3LT[2]
	5M1	**Mirror, exterior, power adjustable, manual folding, non-heated and non-extendable (MSRP = No Charge)** Provides the left and right hand side outside power adjustable, manual folding, non-heated, non-extendable, rear view mirrors that are included with SEO (5B5) Power windows and mirrors. Mirror head is the same size and configuration as the base mirror supplied on first tire Uplevel Décors except that the mirror head is not heated and not extendable. 1 - Included and only available with SEO (5B5) power windows and mirrors.	A[1]	A[1]	--	--	--
9F2		**Mirror, outside delete (MSRP = -$25.00 Credit)** Deletes right and left hand outside rear view mirrors that are standard. Includes incomplete vehicle documentation. 1 - Requires models C*35943 and a Fleet order type.	A[1]	A[1]	--	--	--
9N8		**Mirrors, auxiliary dual spot convex, stainless steel (MSRP = $50.00)** Driver and passenger side 6" (15.2 cm) diameter convex spot add-on mirrors with brackets for use with West Coast style mirrors. Mirrors shipped loose in vehicle. 1 - Requires SEO (9F7) outside West Coast-type mirrors.	A[1]	A[1]	--	--	--
9G1		**Mirrors, camper type with convex passenger side mirror head (MSRP = $109.00)** Camper type driver and passenger side manual Black 6" x 10" (15.2 cm x 25.4 cm) mirror heads on sail panel mounted extendable arms. Provides a dual segment mirror on the driver side and a full convex mirror on the passenger side. 1 - Not available with RPO (C7W) 11,400 lbs. (5171 kg) GVWR, or on C*35943 models.	A[1]	A[1]	--	--	--
8G9		**Mirrors, outside, convex combination, stainless steel (MSRP = $278.00)** Provides a convex combination driver and passenger side outside rearview mirror with 6" x 10" (15.2 cm x 25.4 cm) flat positioned over a 6" x 6.5" (15.2 cm x 16.5 cm) convex mirror head. Provides drilling in cab and mirror assembly shipped loose. For use with wide body applications up to 96" (243.8 cm). 1 - Requires RPO (ZW9) pickup box delete on models C*35903 and C*35953.	A[1]	A[1]	--	--	--
9F7		**Mirrors, outside driver and passenger side West Coast type (MSRP = $125.00)** Provides large West Coast style mirrors with spring loaded pre-set feature. Mirrors are Black. Includes cab drillings and mirror assembly shipped loose.	A	A	--	--	--

Free Flow RPO Code	Ref. Only RPO Code	Description 1 - Equipment groups 1WT, 1LS and 1LT available on C*35903, C*35953, and C*35943 Models. 2 - Equipment group 2LT and 3LT available on C*35953 and C*35943 Models.	Reg., Ext. and Crew Cab			Ext. and Crew Cab	
			Work Truck 1WT[1]	LS 1LS[1]	LT1 1LT[1]	LT2 2LT[2]	LT3 3LT[2]
6R2		**Mirrors, outside rearview, sail panel mounted wide field of vision, manual adjust, black (MSRP = $250.00)** Provides convex combination RH and LH that are sail panel mounted, has 63.3 sq. inch flat glass positioned over a 30.1 sq. inch convex glass within a common head. Mirrors are shipped loose in vehicle. 1 - Requires RPO (ZW9) pickup box delete. Not available with SEO (5B5) power windows and mirrors.	A[1]	A[1]	--	--	--
8F2		**Ornamentation, delete (MSRP = No Charge)** Upfitter option. Deletes decals and nameplates on truck exterior. 1 - Requires Upfitter order type.	A[1]	A[1]	--	--	--
9V9		**Paints, solid (MSRP = No Charge),** Doeskin Tan 1 - Requires SEO (TGK) solid paint.	A[1]	A[1]	A[1]	A[1]	A[1]
9W4		**Paints, solid (MSRP = No Charge),** Tangier Orange 1 - Requires SEO (TGK) solid paint.	A[1]	A[1]	A[1]	A[1]	A[1]
9W3		**Paints, solid (MSRP = No Charge),** Wheatland Yellow 1 - Requires SEO (TGK) solid paint.	A[1]	A[1]	A[1]	A[1]	A[1]
9V5		**Paints, solid (MSRP = No Charge),** Woodland Green 1 - Requires SEO (TGK) solid paint.	A[1]	A[1]	A[1]	A[1]	A[1]
5Y0		**Provision for body mounted lamp with hook-up wiring (MSRP = $88.00)** Provides an instrument panel mounted switch and electrical hook-up behind the cab for a body upfitter to connect a body mounted warning or emergency lamp. 21 amp nominal rating. 1 - Requires RPO (LQ4) Vortec 6.0L V8 SFI engine, RPO (L18) Vortec 8.1L V8 SFI engine, RPO (AE7) front 40/20/40 split-bench seat or RPO (A95) front bucket seats. Not available with SEO (5G4) provision for cab roof-mounted lamp, SEO (5X7) provision for body-mounted lamp, RPO (VYU) Snow Plow Prep Package or RPO (MW3) 5-speed manual transmission.	A[1]	A[1]	A[1]	--	--
5X7		**Provision for body mounted warning lamp (MSRP = $98.00)** Provides an instrument panel mounted switch and heavy duty electrical relay with hook-up terminal in the engine compartment for a body upfitter to connect a body mounted warning or emergency lamp. 40 amp nominal rating. 1 - Requires RPO (LQ4) Vortec 6.0L V8 SFI engine or RPO (L18) Vortec 8.1L V8 SFI engine. Not available with RPO (TP2) auxiliary heavy-duty, 600 cold-cranking-amp battery, SEO (8B0) 770 cold-cranking-amp battery with a auxiliary heavy-duty, 600 cold-cranking-amp battery, SEO (5G4) provision for cab roof-mounted lamp, SEO (5Y0) provision for body-mounted lamp with hook-up wiring, RPO (VYU) Snow Plow Prep Package or RPO (MW3) 5-speed manual transmission.	A[1]	A[1]	A[1]	A[1]	A[1]

Free Flow RPO Code	Ref. Only RPO Code	Description 1 - Equipment groups 1WT, 1LS and 1LT available on C*35903, C*35953, and C*35943 Models. 2 - Equipment group 2LT and 3LT available on C*35953 and C*35943 Models.	Reg., Ext. and Crew Cab			Ext. and Crew Cab	
			Work Truck 1WT[1]	LS 1LS[1]	LT1 1LT[1]	LT2 2LT[2]	LT3 3LT[2]
5G4		**Provision for cab roof-mounted lamp (MSRP = $103.00)** Instrument panel mounted switch and wiring to the roof of the cab for body upfitter to install and connect a cab roof mounted warning or emergency lamp. 21 amp nominal rating. Circuit access instructions are furnished. 1 - Not available with RPO (VYU) Snow Plow Prep Package, RPO (UE1) OnStar, SEO (5Y0) provision for body-mounted lamp with hook-up wiring, SEO (5X7) provision for body-mounted warning lamp or RPO (CF5) power sunroof.	A[1]	A[1]	A[1]	--	--
TGK		**Solid Paint** SEO solid paint, one color 1 - Required with any SEO paint selection. May require an extended lead time.	A[1]	A[1]	A[1]	A[1]	A[1]
9L3		**Spare tire delete (MSRP = -$45.00 Credit)** Deletes the spare tire only. Spare wheel and carrier remain. 1 - Requires RPO (E63) Fleetside pickup box.	A[1]	A[1]	A[1]	A[1]	A[1]
5Z4		**Spare wheel and tire delete (MSRP = -$110.00 Credit)** Deletes spare tire, wheel and carrier that are base equipment. 1 - Requires RPO (E63) pickup body. Not available with RPO (SAF) spare tire lock.	A[1]	A[1]	A[1]	A[1]	A[1]
5Q1		**Tail Lamp delete (MSRP = -$27.00 Credit)** Body builder option. Deletes tail lamps and license plate lamp. Body builder must supply the rear lighting system. Certain types of rear lamp installations may require adding a resistor. 1 - Requires RPO (ZW9) pickup box delete. Not available with C*35943 models.	A[1]	A[1]	--	--	--
		Mechanical					
8C6		**Alternator, 145 amp (MSRP = $140.00)** 145 amp alternator in place of the standard 105 amp alternator. 1 - Requires RPO (LQ4) Vortec 6.0L V8 SFI engine or RPO (L18) Vortec 8.1L V8 SFI engine. Not available with RPO (VYU) Snow Plow Prep Package.	A[1]	A[1]	A[1]	A[1]	A[1]
8X5		**Alternators, dual 105 amp (MSRP =$224.00)** Provides 210 amps total alternator power from a dual 105 amp alternator system. 1 - Requires RPO (LBZ) Duramax 6.6L Turbo Diesel V8 engine. Not available with RPO (VYU) Snow Plow Prep Package.	A[1]	A[1]	A[1]	A[1]	A[1]
8B0		**Batteries, 770 CCA with a 600 CCA auxiliary (MSRP = $190.00)** 770 CCA main cranking battery with a 600 CCA auxiliary battery. Auxiliary battery has an isolator and is not wired to ignition: provides an auxiliary electrical power source. 1 - Requires RPO (LQ4) Vortec 6.0L V8 SFI engine or RPO (L18) Vortec 8.1L V8 SFI engine. Not available with models C*35943, RPO (TP2) auxiliary heavy-duty, 600 cold-cranking-amp battery or RPO (LBZ) Duramax 6.6L Turbo Diesel V8 engine.	A[1]	A[1]	A[1]	A[1]	A[1]

Free Flow RPO Code	Ref. Only RPO Code	Description 1 - Equipment groups 1WT, 1LS and 1LT available on C*35903, C*35953, and C*35943 Models. 2 - Equipment group 2LT and 3LT available on C*35953 and C*35943 Models.	Reg., Ext. and Crew Cab			Ext. and Crew Cab	
			Work Truck 1WT[1]	LS 1LS[1]	LT1 1LT[1]	LT2 2LT[2]	LT3 3LT[2]
7Y9		**Battery, Single 770 CCA (MSRP = $56.00)** Provides a 770 CCA HD cranking battery. 1 - Requires RPO (LQ4) Vortec 6.0L V8 SFI engine or RPO (L18) Vortec 8.1L V8 SFI engine. Not available with RPO (TP2) auxiliary, heavy-duty, 600 cold-cranking-amp battery.	A[1]	A[1]	A[1]	A[1]	A[1]
7Z1		**Horn, high note (MSRP = $20.00)** In addition to base low note horn.	A	A	--	--	--
9L4		**Power supply, 12 volt (MSRP = $168.00)** 12 volt direct power supply from the battery with two separate 30 amp fused circuits. Each circuit has a 30 amp mini fuse for both positive and ground to protect electrical accessories. Main supply lead has a 40 amp maxi-fuse. All fuses are serviceable. Provides either direct battery power or operation through the ignition system. Hook-up wire is provided under the passenger side glove box. Operational amperage is 21 amps each circuit; 28 amps total. Hook-up and operational instructions are provided. 1 - Not available with RPO (U2K) XM Satellite Radio, RPO (UE1) OnStar, or RPO (U42) entertainment system on models C*35943 or RPO (MW3) 5-speed manual transmission.	A[1]	A[1]	A[1]	A[1]	A[1]
		Ship Thru Codes					
VAB		**Ship Thru for Models C*35953 and CK35903 (MSRP = $165.00)** Produced in Pontiac Assembly and shipped to NBC Truck Equipment	A	A	A	A	A
VAY		**Ship Thru for Models C*35953 and CK35903 (MSRP = $165.00)** Produced in Pontiac Assembly and shipped to K&B Mounting	A	A	A	A	A
VBK		**Ship Thru for Models C*35**3 (MSRP = $270.00)** Produced in Pontiac Assembly and shipped to Ft. Wayne Fleet Equipment	A	A	A	A	A
VCB		**Ship Thru for Models C*35943 (MSRP = $120.00)** Produced in Flint Assembly and shipped to Monroe Truck Equipment (in Flint) and back to Flint Assembly.	A	A	A	A	A
VFW		**Ship Thru for Models C*35943 (MSRP = $255.00)** Produced in Flint Assembly and shipped to NBC Truck Equipment	A	A	A	A	A
VGH		**Ship Thru for Models C*35953 and CK35903 (MSRP = $160.00)** Produced in Pontiac Assembly and shipped to Monroe Truck Equipment	A	A	A	A	A
VGS		**Ship Thru for models C*35943 (MSRP = $130.00)** Produced in Flint Assembly and shipped to Select Solutions Group Corp. in Flint, Michigan.	A	A	A	A	A

2007 Chevrolet Truck Silverado 3500 SEO OPTIONS/SHIP THRU CODES
Classic

Free Flow RPO Code	Ref. Only RPO Code	Description 1 - Equipment groups 1WT, 1LS and 1LT available on C*35903, C*35953, and C*35943 Models. 2 - Equipment group 2LT and 3LT available on C*35953 and C*35943 Models.	Reg., Ext. and Crew Cab			Ext. and Crew Cab	
			Work Truck 1WT[1]	LS 1LS[1]	LT1 1LT[1]	LT2 2LT[2]	LT3 3LT[2]
VGZ		**Ship Thru for Models C*35953 and CK35903 (MSRP = $165.00)** Produced in Pontiac Assembly and shipped to Canfield	A	A	A	A	A
VSQ		**Ship Thru for Models C*35943 (MSRP = $270.00)** Produced in Flint Assembly and shipped to Monroe Truck Equipment (in Janesville, WI) and onto Janesville Assembly.	A	A	A	A	A
VUD		**Ship Thru for Models C*35943 (MSRP = $120.00)** Produced in Flint Assembly and shipped to Knapheide Truck Equipment	A	A	A	A	A
VUI		**Ship Thru for Models C*35943 (MSRP = $295.00)** Produced in Flint Assembly and shipped to Ft. Wayne Fleet Equipment	A	A	A	A	A
VUM		**Ship Thru for Models C*35943 (MSRP = $375.00)** Produced in Flint Assembly and shipped to Buckeye Truck Equipment	A	A	A	A	A
VWS		**Ship Thru for Models C*35953 and CK35903 (MSRP = $310.00)** Produced in Pontiac Assembly and shipped to Buckeye Truck Equipment	A	A	A	A	A
VYC		**Ship Thru for Models C*35953 and CK35903 (MSRP = $160.00)** Produced in Pontiac Assembly and shipped to Knapheide Truck Equipment	A	A	A	A	A
VYS		**Ship Thru for Models C*35953 and CK35903 (MSRP = $165.00)** Produced in Pontiac Assembly and shipped to Masterack Truck Equipment	A	A	A	A	A

2007 Chevrolet Truck Silverado 3500 ONSTAR FLEET CODES
Classic

S = Standard Equipment A = Available -- (dashes) = Not Available D = ADI Available
■ = Included in Equipment Group □ = Included in Equipment Group but upgradeable

*Indicates availability of feature on multiple models. For example, it indicates feature availability on 2WD and 4WD Models or Rear wheel drive and All-wheel drive Models.

Codes listed in the shaded column titled Ref. Only RPO Code are for internal use only and should not be ordered.

Free Flow RPO Code	Ref. Only RPO Code	Description 1 - Equipment groups 1WT, 1LS and 1LT available on C*35903, C*35953, and C*35943 Models. 2 - Equipment group 2LT and 3LT available on C*35953 and C*35943 Models.	Reg., Ext. and Crew Cab			Ext. and Crew Cab	
			Work Truck 1WT[1]	LS 1LS[1]	LT1 1LT[1]	LT2 2LT[2]	LT3 3LT[2]
R8G		**OnStar 1 Additional Year of Safe and Sound Service (MSRP= $199).** Provides 1 year of Safe and Sound service following the first year of OnStar service included in the price of the vehicle. Fleet may also order (RFB) 2-Years OnStar Business Vehicle Manager Service **1 - Requires one of the following Fleet or Government order types: FLS, FNR, FRC, FBC, FGO or FEF. Not available with R8P, R8U, R8V, R8W, R8Y or R8Z. Requires (UE1) 1-Year OnStar service.**	--	--	A[1]	A[1]	A[1]
R8P		**OnStar 2 Additional Years of Safe and Sound Service (MSRP=$379)** Provides 2 additional years of Safe and Sound service following the first year of OnStar service included in the price of the vehicle. Fleet may also order (RFC) 3-Years OnStar Business Vehicle Manager Service **1 - Requires one of the following Fleet or Government order types: FLS, FNR, FRC, FBC, FGO or FEF. Not available with R8G, R8U, R8V, R8W, R8Y or R8Z. Requires (UE1) 1-Year OnStar service.**	--	--	A[1]	A[1]	A[1]
R8U		**OnStar 3-Years Safe and Sound Service (MSRP=$679)** Provides 3 Years of Safe and Sound service. Includes cost of hardware. Fleet may also order (RFC) 3-Years OnStar Business Vehicle Manager Service **1 - Requires one of the following Fleet or Government order types: FLS, FNR, FRC, FBC, FGO or FEF. Requires (UE1) 1-Year OnStar service. Not available with R8G, R8P, R8V, R8W, R8Y or R8Z.**	--	--	A[1]	A[1]	A[1]
R8V		**OnStar 3-Years Directions and Connections Service (MSRP=$979)** Provides 3 years of Directions and Connections service. Includes cost of hardware. Fleet may also order (RFC) 3-Years OnStar Business Vehicle Manager Service **1 - Requires one of the following Fleet or Government order types: FLS, FNR, FRC, FBC, FGO or FEF. Requires (UE1) 1-Year OnStar service. Not available with R8G, R8P, R8U, R8W, R8Y or R8Z.**	--	--	A[1]	A[1]	A[1]
R8W		**OnStar 1-Year Directions and Connections Service (MSRP=$100)** Provides an upgrade from Safe and Sound service included in the price of the vehicle in the first year. Fleet may also order (RFA) 1-Year OnStar Business Vehicle Manager Service **1 - Requires one of the following Fleet or Government order types: FLS, FNR, FRC, FBC, FGO or FEF. Not available with R8G, R8P, R8U, R8V, R8Y or R8Z. Requires (UE1) 1-Year OnStar service.**	--	--	A[1]	A[1]	A[1]

2007 Chevrolet Truck Silverado 3500 Classic ONSTAR FLEET CODES

Free Flow RPO Code	Ref. Only RPO Code	Description 1 - Equipment groups 1WT, 1LS and 1LT available on C*35903, C*35953, and C*35943 Models. 2 - Equipment group 2LT and 3LT available on C*35953 and C*35943 Models.	Reg., Ext. and Crew Cab			Ext. and Crew Cab	
			Work Truck 1WT[1]	LS 1LS[1]	LT1 1LT[1]	LT2 2LT[2]	LT3 3LT[2]
R8Y		**OnStar 2-Years Directions and Connections Service (MSRP=$399)** Provides cumulative 2 Years of Directions and Connections service. In the first year, this is an upgrade from Safe and Sound service included in the price of the vehicle. Fleet may also order (RFB) 2-Years OnStar Business Vehicle Manager Service **1 - Requires one of the following Fleet or Government order types: FLS, FNR, FRC, FBC, FGO or FEF. Not available with R8G, R8P, R8U, R8V, R8W or R8Z. Requires (UE1) 1-Year OnStar service.**	--	--	A[1]	A[1]	A[1]
R8Z		**OnStar 3-Years Directions and Connections Service (MSRP=$679)** Provides cumulative 3 Years of Directions and Connections service. In the first year, this is an upgrade from Safe and Sound service included in the price of the vehicle. Fleet may also order (RFC) 3-Year OnStar Business Vehicle Manager Service **1 - Requires one of the following Fleet or Government order types: FLS, FNR, FRC, FBC, FGO or FEF. Not available with R8G, R8P, R8U, R8V, R8W or R8Y. Requires (UE1) 1-Year OnStar service.**	--	--	A[1]	A[1]	A[1]
RFA		**OnStar 1-Year Business Vehicle Manager Service (MSRP=$25)** Provides one year of OnStar Business Vehicle Manager Service **1 - Requires one of the following Fleet or Government order types: FLS, FNR, FRC, FBC, FGO or FEF. Not available with RFB or RFC. Requires (UE1) 1-Year OnStar service or (R8W) 1-Year Directions and Connections Service.**	--	--	A[1]	A[1]	A[1]
RFB		**OnStar 2-Years Business Vehicle Manager Service (No charge)** Provides two years of OnStar Business Vehicle Manager Service **1 - Requires one of the following Fleet or Government order types: FLS, FNR, FRC, FBC, FGO or FEF. Not available with RFA or RFC. Requires (UE1) 1-Year OnStar service and either (R8G) or (R8Y) which provide for a total of two years of OnStar service.**	--	--	A[1]	A[1]	A[1]
RFC		**OnStar 3-Years Business Vehicle Manager Service (No Charge)** Provides three years of OnStar Business Vehicle Manager Service **1 - Requires one of the following Fleet or Government order types: FLS, FNR, FRC, FBC, FGO or FEF. Not available with RFA or RFB. Requires (UE1) 1-Year OnStar service and either (R8P), (R8U), (R8V), or (R8Z) which provide for a total of three years of OnStar service.**	--	--	A[1]	A[1]	A[1]

2007 Chevrolet Truck Silverado 3500 Classic ADI - ACCESSORIES

There is no data available for Silverado 3500 Classic.

All dimensions in inches (mm) unless otherwise stated.

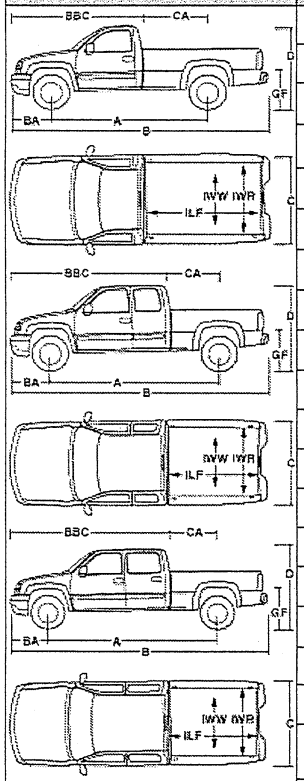

	Specifications	CC35903 2WD Regular Cab Long Box with Single rear wheel only	CC35953 2WD Extended Cab Long Box with Single or Dual rear wheel	CC35943 2WD Crew Cab Long Box with Single or Dual rear wheel
A	Wheelbase	133.00 (3378)	157.50 (4000)	167.00 (4242)
B	Overall length	224.50 (5702)	249.00 (6325)	258.50 (6566)
C	Body width, with Single rear wheels	79.70 (2024)	79.70 (2024)	79.70 (2024)
C	Body width, with Dual rear wheels	--	96.10 (2441)	96.10 (2441)
D	Overall height	76.70 (1948)	76.30 (1938)	77.30 (1963)
	Head room, front	41.00 (1041)	41.00 (1041)	41.00 (1041)
	Head room, rear	--	38.40 (975)	39.00 (991)
	Shoulder room, front	65.20 (1656)	65.20 (1656)	65.20 (1656)
	Shoulder room, rear	--	66.30 (1684)	65.10 (1654)
	Hip room, front	61.40 (1560)	61.40 (1560)	61.40 (1560)
	Hip room, rear	--	61.50 (1562)	62.90 (1598)
	Leg room, front	41.30 (1049)	41.30 (1049)	41.30 (1049)
	Leg room, rear	--	33.70 (856)	39.10 (993)
CA	Cab to axle	55.90 (1420)	55.90 (1420)	55.90 (1420)
BA	Front bumper to axle	37.00 (940)	37.00 (940)	37.00 (940)
	Rear bumper to axle	52.20 (1326)	52.20 (1326)	52.20 (1326)
ILF	Inside length, at floor	97.60 (2479)	97.60 (2479)	97.60 (2479)
	Inside height	19.50 (495)	19.50 (495)	19.50 (495)
	Inside width, at floor	64.80 (1646)	64.80 (1646)	64.80 (1646)
IWR	Tailgate width, top	61.90 (1572)	61.90 (1572)	61.90 (1572)

All dimensions in inches (mm) unless otherwise stated.

	Specifications	CC35903 2WD Regular Cab Long Box with Single rear wheel only	CC35953 2WD Extended Cab Long Box with Single or Dual rear wheel	CC35943 2WD Crew Cab Long Box with Single or Dual rear wheel
BBC	Front bumper to back of cab	114.10 (2898)	138.70 (3523)	148.10 (3762)
GF	Ground to top of rear load floor	35.80 (909)	35.70 (907)	35.20 (894)
IWW	Inside width, between wheelhousing, Fleetside	50.00 (1270)	50.00 (1270)	50.00 (1270)
	Ground clearance, front	10.60 (269)	9.10 (231)	9.10 (231)
	Ground clearance, rear	13.60 (345)	12.10 (307)	12.10 (307)

Published dimensions indicated are without optional equipment or accessories. Additional accessories or equipment ordered at the customer's request can result in a minor change in these dimensions.

2007 Chevrolet Truck Silverado 3500 Classic — DIMENSIONS - 4WD

All dimensions in inches (mm) unless otherwise stated.

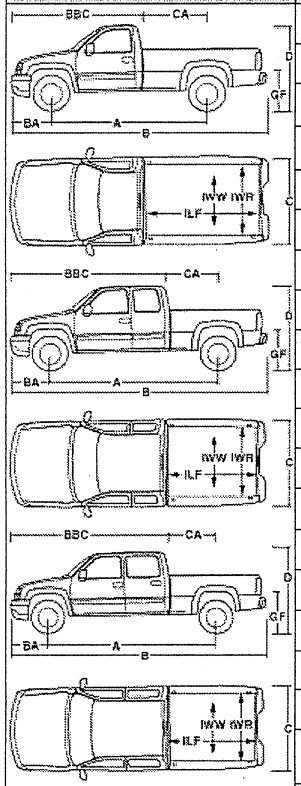

	Specifications	CK35803 4x4 Regular Cab Long Box with Single or Dual rear wheel	CK35953 4x4 Extended Cab Long Box with Single or Dual rear wheel	CK35943 4x4 Crew Cab Long Box with Single or Dual rear wheel
A	**Wheelbase**	133.00 (3378)	157.50 (4000)	167.00 (4242)
B	**Overall length**	224.50 (5702)	249.00 (6325)	258.50 (6566)
C	**Body width,** with Single rear wheels	79.70 (2024)	79.70 (2024)	79.70 (2024)
C	**Body width,** with Dual rear wheels	96.10 (2441)	96.10 (2441)	96.10 (2441)
D	**Overall height**	76.70 (1948)	76.70 (1948)	77.30 (1963)
	Head room, front	41.00 (1041)	41.00 (1041)	41.00 (1041)
	Head room, rear	--	38.40 (975)	39.00 (991)
	Shoulder room, front	65.20 (1656)	65.20 (1656)	65.20 (1656)
	Shoulder room, rear	--	66.30 (1684)	65.10 (1654)
	Hip room, front	61.40 (1560)	61.40 (1560)	61.40 (1560)
	Hip room, rear	--	61.50 (1562)	62.90 (1598)
	Leg room, front	41.30 (1049)	41.30 (1049)	41.30 (1049)
	Leg room, rear	--	33.70 (856)	39.10 (993)
CA	**Cab to axle**	55.90 (1420)	55.90 (1420)	55.90 (1420)
BA	**Front bumper to axle**	37.00 (940)	37.00 (940)	37.00 (940)
	Rear bumper to axle	52.20 (1326)	52.20 (1326)	52.20 (1326)
ILF	**Inside length,** at floor	97.60 (2479)	97.60 (2479)	97.60 (2479)
	Inside height	19.50 (495)	19.50 (495)	19.50 (495)
	Inside width, at floor	64.80 (1646)	64.80 (1646)	64.80 (1646)
IWR	**Tailgate width,** top	61.90 (1572)	61.90 (1572)	61.90 (1572)

2007 Chevrolet Truck Silverado 3500 Classic — DIMENSIONS - 4WD

All dimensions in inches (mm) unless otherwise stated.

	Specifications	CK35803 4x4 Regular Cab Long Box with Single or Dual rear wheel	CK35953 4x4 Extended Cab Long Box with Single or Dual rear wheel	CK35943 4x4 Crew Cab Long Box with Single or Dual rear wheel
BBC	**Front bumper to back of cab**	114.10 (2898)	138.70 (3523)	148.10 (3762)
GF	**Ground to top of rear load floor**	35.80 (909)	35.10 (892)	34.40 (874)
IWW	**Inside width,** between wheelhousing, Fleetside	50.00 (1270)	50.00 (1270)	50.00 (1270)
	Ground clearance, front	10.60 (269)	10.60 (269)	10.60 (269)
	Ground clearance, rear	13.60 (345)	13.60 (345)	13.60 (345)

Published dimensions indicated are without optional equipment or accessories. Additional accessories or equipment ordered at the customer's request can result in a minor change in these dimensions.

	CC35903 2WD Regular Cab Long Box with Single rear wheel only Box delete only	CK35903 4x4 Regular Cab Long Box with Single or Dual rear wheel	CC35953 2WD Extended Cab Long Box with Single or Dual rear wheel	CK35953 4x4 Extended Cab Long Box with Single or Dual rear wheel	CC35943 2WD Crew Cab Long Box with Single or Dual rear wheel	CK35943 4x4 Crew Cab Long Box with Single or Dual rear wheel
Specifications						
Front shock absorber diameter, in. (mm)	1.38 (35)	1.38 (35)	1.38 (35)	1.38 (35)	1.38 (35)	1.38 (35)
Front stabilizer bar diameter, in. (mm)	1.18 (30)	1.18 (30)	1.25 (32)	1.25 (32)	1.25 (32)	1.25 (32)
Rear shock absorber diameter, in. (mm)	1.38 (35)	1.38 (35)	1.38 (35)	1.38 (35)	1.38 (35)	1.38 (35)
Turning diameter, curb-to-curb (with Single Rear Wheels), ft. (m)	TBD	TBD	TBD	TBD	TBD	TBD
Turning diameter, curb-to-curb (with Dual Rear Wheels), ft. (m)	--	43.7 (13.3)	50.7 (15.5)	50.8 (15.5)	53.5 (16.3)	55.7 (17.0)
Capacities						
Front axle, lbs. (kg)	4800 (2177)	4800 (2177)	4800 (2177)	4800 (2177)	4800 (2177)	4800 (2177)
Front spring capacity (with Single Rear Wheels), lbs. (kg)	4800 (2177)	4800 (2177)	4800 (2177)	4800 (2177)	4800 (2177)	4800 (2177)
Front spring capacity (with Dual Rear Wheels), lbs. (kg)	--	4500 (2041)	4800 (2177)	4800 (2177)	4800 (2177)	4800 (2177)
Rear axle, lbs. (kg)	9200 (4173)	9200 (4173)	9200 (4173)	9200 (4173)	9200 (4173)	9200 (4173)
Rear spring capacity (with Single Rear Wheels), lbs. (kg)	6500 (2948)	6500 (2948)	6500 (2948)	6500 (2948)	6500 (2948)	6500 (2948)
Rear spring capacity (with Dual Rear Wheels), lbs. (kg)	--	8600 (3901)	8600 (3901)	8600 (3901)	8600 (3901)	8600 (3901)
Curb weight (with Single Rear Wheels), lbs. (kg)	4942 (2242)	5687 (2580)	5712 (2591)	6197 (2811)	5911 (2681)	6322 (2868)
Curb weight (with Dual Rear Wheels), lbs. (kg)	--	5889 (2671)	6053 (2746)	6351 (2881)	6231 (2826)	6552 (2972)
Cargo volume, cargo box, cu. ft. (liters)	73.9 (2092.8)	73.9 (2092.8)	73.9 (2092.8)	73.9 (2092.8)	73.9 (2092.8)	73.9 (2092.8)
Payload (with Single Rear Wheels), lbs. (kg)	4658 (2113)	4213 (1911)	4088 (1854)	3703 (1680)	3989 (1809)	3578 (1623)
Payload (with Dual Rear Wheels), lbs. (kg)	--	5511 (2500)	5347 (2425)	5049 (2290)	5169 (2345)	4848 (2199)
Gross Vehicle Weight Rating (GVWR) (with Single Rear Wheels), lbs. (kg)	9600 (4355)	9900 (4491)	9800 (4445)	9900 (4491)	9900 (4491)	9900 (4491)
Gross Vehicle Weight Rating (GVWR) (with Dual Rear Wheels), lbs. (kg)	--	11400 (5171)	11400 (5171)	11400 (5171)	11400 (5171)	11400 (5171)
Front Gross Axle Weight Rating (GAWR) (with Single Rear Wheels), lbs. (kg)	--	4800 (2177)	--	4800 (2177)	--	4800 (2177)
Front Gross Axle Weight Rating (GAWR)	--	4500 (2041)	4670 (2118)	4800 (2177)	4670 (2118)	4800 (2177)

(with Dual Rear Wheels), lbs. (kg)						
Rear Gross Axle Weight Rating (GAWR) (with Single Rear Wheels), lbs. (kg)	--	6500 (2948)	--	6500 (2948)	--	6500 (2948)
Rear Gross Axle Weight Rating (GAWR) (with Dual Rear Wheels), lbs. (kg)	--	8550 (3878)	8550 (3878)	8550 (3878)	8550 (3878)	8550 (3878)
Fuel capacity, approximate, gallon (liters)	34 (129)	34 (129)	34 (129)	34 (129)	34 (129)	34 (129)
Seating capacity (front/rear)	3	3	3/3	3/3	3/3	3/3

2007 Chevrolet Truck Silverado 3500 Classic — WHEELS

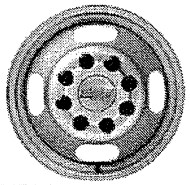	**Wheels**, 6 - 16" x 6.5" (40.6 cm x 16.5 cm) 8-lug painted steel (dual rear), includes painted center caps and steel spare
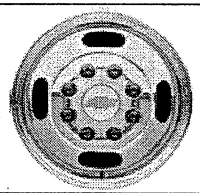	P06 **Wheels**, 6 - 16" x 6.5" (40.6 cm x 16.5 cm) 8-lug steel, with bright metal rings, chrome center caps and steel spare
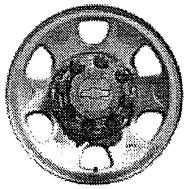	QC1 **Wheels**, 4 - 16" x 7.0" (40.6 cm x 17.8 cm) 8-lug steel (single rear wheel)
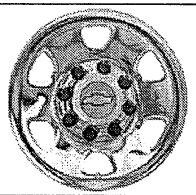	NZ7 **Wheels**, 4 - 16" x 7" (40.6 cm x 17.8 cm) 8-lug chrome-clad steel

2007 Chevrolet Truck Silverado 3500 Classic — RADIOS

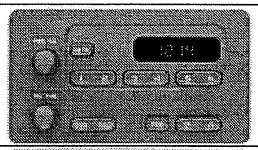	UM7 **Audio system**, AM/FM stereo with seek-and-scan and digital clock
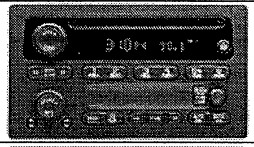	UB0 **Audio system**, AM/FM stereo with CD player, seek-and-scan, digital clock, auto-tone control, Radio Data System (RDS) and speed-compensated volume
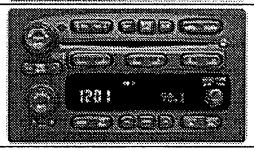	UC6 **Audio system**, AM/FM stereo with 6-disc CD changer, seek-and-scan, digital clock, auto-tone control, Radio Data System (RDS), speed-compensated volume and TheftLock

2007 Chevrolet Truck Silverado 3500 Classic — TRAILERING SPECS - Automatic or Manual Transmission Ratings with Ball Hitch for Heavy Duty Models

Maximum trailer ratings are calculated assuming standard equipped vehicle, driver and required trailering equipment. The weight of optional equipment, passengers and cargo will reduce the maximum trailer weight your vehicle can tow. 10 to 15% of the trailer weight is the recommended trailer tongue load.

Automatic or Manual Transmission Ratings with Ball Hitch for Heavy Duty Models

Model	(LQ4) Vortec 6.0L V8 SFI		(L18) Vortec 8.1L V8 SFI		(LBZ) Duramax 6.6L Turbo Diesel V8	
	Axle Ratio	Maximum Trailer Weight lbs. (kg)	Axle Ratio	Maximum Trailer Weight lbs. (kg)	Axle Ratio	Maximum Trailer Weight lbs. (kg)
CC35903	4.10	10300 (4672)				
CC35953 w/(GEC)	4.10	9800 (4445)	4.10	12000 (5443)	4.10	12000 (5443)
CC35953 w/(C7W)	4.10	9700 (4400)	4.10	12000 (5443)	3.73	12000 (5443)
CC35943 w/(C4M)	4.10	9600 (4355)	4.10	12000 (5443)	4.10	12000 (5443)
CC35943 w/(C7W)	4.10	9500 (4309)	4.10	12000 (5443)	3.73	12000 (5443)
CK35903 w/(C4M)	4.10	10000 (4536)	4.10	12000 (5443)	3.73	12000 (5443)
CK35903 w/(C7W)	4.10	9800 (4445)	4.10	12000 (5443)	3.73	12000 (5443)
CK35953 w/(C4M)	4.10	9600 (4355)	4.10	12000 (5443)	3.73	12000 (5443)
CK35953 w/(C7W)	4.10	9400 (4264)	4.10	12000 (5443)	3.73	12000 (5443)
CK35943 w/(C4M)	4.10	9400 (4264)	4.10	12000 (5443)	3.73	12000 (5443)
CK35943 w/(C7W)	4.10	9200 (4173)	4.10	12000 (5443)	3.73	12000 (5443)

GCWR For Engine/Rear Axle Ratio Combination with Manual Transmission

Engine	(GCWR) Gross Combination Weight Ratings lbs. (kg)		
	16000 (7258)	22000 (9979)	23500 (10660)
(LQ4) Vortec 6.0L V8 SFI	4.10		
(L18) Vortec 8.1L V8 SFI		4.10	
(LBZ) Duramax 6.6L Turbo Diesel V8		3.73[1]	3.73[2]

1 - Requires (C4M) GVWR, 9900 lbs.
2 - Requires (C7W) GVWR, 11,400 lbs.

2007 Chevrolet Truck Silverado 3500 Classic — TRAILERING SPECS - Transmission Ratings (Automatic or Manual) with 5th Wheel

Maximum trailer ratings are calculated assuming standard equipped vehicle, driver and required trailering equipment. The weight of optional equipment, passengers and cargo will reduce the maximum trailer weight your vehicle can tow. 10 to 15% of the trailer weight is the recommended trailer tongue load.

Transmission Ratings (Automatic or Manual) with 5th Wheel

Model	(LQ4) Vortec 6.0L V8 SFI		(L18) Vortec 8.1L V8 SFI		(LBZ) Duramax 6.6L Turbo Diesel V8	
	Axle Ratio	Maximum Trailer Weight lbs. (kg)	Axle Ratio	Maximum Trailer Weight lbs. (kg)	Axle Ratio	Maximum Trailer Weight lbs. (kg)
CC35903	4.10	10300 (4672)				
CC35953 w/(GEC)	4.10	9800 (4445)	4.10	15500 (7031)	3.73	15300 (6940)
CC35953 w/(C7W)	4.10	9700 (4400)	4.10	15300 (6940)	3.73	16600 (7530)
CC35943 w/(C4M)	4.10	9600 (4355)	4.10	15300 (6940)	3.73	15100 (6849)
CC35943 w/(C7W)	4.10	9500 (4309)	4.10	15100 (6849)	3.73	16400 (7439)
CK35903 w/(C4M)	4.10	10000 (4536)	4.10	15600 (7076)	3.73	15400 (6985)
CK35903 w/(C7W)	4.10	9800 (4445)	4.10	15400 (6985)	3.73	16700 (7575)
CK35953 w/(C4M)	4.10	9600 (4355)	4.10	15200 (6895)	3.73	15000 (6804)
CK35953 w/(C7W)	4.10	9400 (4264)	4.10	15000 (6804)	3.73	16300 (7394)
CK35943 w/(C4M)	4.10	9400 (4264)	4.10	15000 (6804)	3.73	14700 (6668)
CK35943 w/(C7W)	4.10	9200 (4173)	4.10	14800 (6713)	3.73	16000 (7258)

GCWR For Engine/Rear Axle Ratio Combination with Automatic Transmission

Engine	(GCWR) Gross Combination Weight Ratings lbs. (kg)		
	16000 (7258)	22000 (9979)	23500 (10660)
(LQ4) Vortec 6.0L V8 SFI	4.10		
(L18) Vortec 8.1L V8 SFI		4.10	
(LBZ) Duramax 6.6L Turbo Diesel V8		3.73[2]	3.73[1]

1 - Requires (C7W) GVWR, 11,400 lbs.
2 - Requires (C4M) GVWR, 9900 lbs.

Option Code	Description
**2	Seat trim, leather
**C	Seat trim, cloth
**D	Seat trim, Custom Cloth
**V	Seat trim, vinyl
5B5	Power windows and mirrors (MSRP = $738.00) with Regular Cab and Extended Cab Models (MSRP = $815.00) with Crew Cab Models
5G4	Provision for cab roof-mounted lamp (MSRP = $103.00)
5M1	Mirror, exterior, power adjustable, manual folding, non-heated and non-extendable (MSRP = No Charge)
5Q1	Tail Lamp delete (MSRP = -$27.00 Credit)
5V1	Carrier with spare wheel - no tire (MSRP = $82.00)
5X7	Provision for body mounted warning lamp (MSRP = $98.00)Provides an instrument panel mounted switch and heavy duty electrical relay with hook-up terminal in the engine compartment for a body upfitter to connect a body mounted warning or emergency lamp. 40 amp nominal rating.
5Y0	Provision for body mounted lamp with hook-up wiring (MSRP = $88.00)Provides an instrument panel mounted switch and electrical hook-up behind the cab for a body upfitter to connect a body mounted warning or emergency lamp. 21 amp nominal rating.
5Z4	Spare wheel and tire delete (MSRP = -$110.00 Credit)
5Z5	Hubcap delete (MSRP = -$15.00 Credit) with RPO (C4M) GVWR, 9900 lbs. (4490 kg) and (MSRP = -$18.00 Credit) with RPO (C7W) GVWR, 11,400 lbs (5171 kg)Deletes decorative cap at center of wheel.
6C7	Console, roof with reading lamps (MSRP = $55.00)
6P3	Camper Mirrors, power adjustable glass, manual extendable, non-heated (MSRP = $238.00)Alternative mirrors replacing mirrors that are standard with SEO 5B5 Power windows and mirrors on a base decor truck. Right and left hand outside mirrors consisting of 50 square inch flat mirror surface positioned over a 20 square inch convex mirror surface with a common head. Includes turn signals in mirror glass.
6R2	Mirrors, outside rearview, sail panel mounted wide field of vision, manual adjust, black (MSRP = $250.00)
7Y9	Battery, Single 770 CCA (MSRP = $56.00)
7Z1	Horn, high note (MSRP = $20.00)
8B0	Batteries, 770 CCA with a 600 CCA auxiliary (MSRP = $190.00)
8C6	Alternator, 145 amp (MSRP = $140.00)
8E9	Bumper, front, painted White (MSRP = $45.00)
8F2	Ornamentation, delete (MSRP = No Charge)Upfitter option.
8G9	Mirrors, outside, convex combination, stainless steel (MSRP = $278.00)
8Q3	Rear seat delete (MSRP = -$375.00 Credit)
8S3	Backup alarm (MSRP = $103.00)97 decibels back-up alarm.
8V2	Jack and tools delete (MSRP = -$32.00 Credit)
8X1	Label, fasten safety belts (MSRP = $2.00)
8X5	Alternators, dual 105 amp (MSRP =$224.00)
9F2	Mirror, outside delete (MSRP = -$25.00 Credit)
9F7	Mirrors, outside driver and passenger side West Coast type (MSRP = $125.00)Provides large West Coast style mirrors with spring loaded pre-set feature.
9G1	Mirrors, camper type with convex passenger side mirror head (MSRP = $109.00)
9L3	Spare tire delete (MSRP = -$45.00 Credit)
9L4	Power supply, 12 volt (MSRP = $168.00)
9M4	Decal delete, tailgate (MSRP = No Charge)
9N8	Mirrors, auxiliary dual spot convex, stainless steel (MSRP = $50.00)

Option Code	Description
9R0	Sound system, ETR AM/FM stereo with cassette (MSRP = $150.00) with Work Truck and (MSRP = No Charge) with LS or LT1 Decor
9R1	Decal delete, Pickup bed (MSRP = No Charge)
9R3	Sound system, delete (MSRP = No Charge)
9S1	Seats, vinyl bucket (MSRP = No Charge) with Work Truck and (MSRP = -$282.00) with LS Decor
9U3	Seats, individual cloth (MSRP = No Charge) on Regular or Extended Cabs with Work Truck Decor, (MSRP = -$282.00 Credit) on Regular and Extended Cabs with LS Decor, (MSRP = $282.00) on Crew Cabs with Work Truck Decor (MSRP = No Charge) on Crew Cabs with LS Decor
9U4	Remote keyless entry (MSRP = $170.00)
9V5	Paints, solid (MSRP = No Charge), Woodland Green
9V9	Paints, solid (MSRP = No Charge), Doeskin Tan
9W3	Paints, solid (MSRP = No Charge), Wheatland Yellow
9W4	Paints, solid (MSRP = No Charge), Tangier Orange
A28	Window, manual rear-sliding, deep-tinted
A31	Windows, power
A95	Seats, front bucket
AE7	Seats, front 40/20/40 split-bench
AE7	Seats, front 40/20/40 split-bench
AG1	Seat adjuster, driver 6-way power
AG2	Seat adjuster, front passenger 10-way power
AJ1	Glass, Solar-Ray deep-tinted
AN3	Seats, front bucket
AU0	Remote Keyless Entry
AU3	Door locks, power
B30	Floor covering, color-keyed carpeting
B71	Wheel flares, front only
BG9	Floor covering, Black rubberized-vinyl
BVE	Regular production accessory, Assist steps, chrome plated tubular, stainless steel
BVS	Regular production accessory, Assist steps, Black coated tubular, stainless steel
C42	Air conditioning delete
C49	Defogger, rear-window
C4M	GVWR, 9900 lbs. (4490 kg)
C6Y	GVWR , 9600 lbs. (4354 kg)
C7W	GVWR, 11,400 lbs. (5171 kg)
CF5	Sunroof, power
CJ2	Air conditioning, dual-zone automatic climate control
CJ3	Air conditioning, dual-zone manual climate control
D07	Console, floor
D44	Mirrors, outside manual, Black
DE2	Mirrors, outside manual, Black
DF2	Mirrors, outside high-visibility camper-style, Black
DF5	Mirror, inside rearview auto-dimming
DK7	Console, overhead mini
DK8	Console, overhead deluxe
DL3	Mirrors, outside heated power-adjustable, power-folding and driver-side auto-dimming, Black
DL8	Mirrors, outside heated power-adjustable, Black

Option Code	Description
DNH	Regular production accessory, Underseat storage
DPN	Mirrors, outside heated power-adjustable vertical camper
E63	Pickup box, Fleetside
E95	Regular production accessory, Tonneau cover, Black, soft
EN6	Regular production accessory, Tonneau cover, Black, hard, folding, lockable
FE9	Emissions, Federal requirements
G80	Differential, heavy-duty automatic locking rear
GEC	GVWR, 9800 lbs. (4445 kg)
GT4	Rear axle, 3.73 ratio
GT5	Rear axle, 4.10 ratio
K05	Engine block heater
K34	Cruise control
K47	Air cleaner, high-capacity
K68	Alternator, 105 amps
KC4	Cooling, external engine oil cooler
KG3	Alternator, 145 amps
KL5	Alternative fuel conversions, conversion-ready engine
KNP	Cooling, auxiliary external transmission oil cooler
L18	Engine, Vortec 8.1L V8 SFI
LBZ	Engine, Duramax 6.6L Turbo Diesel V8
LQ4	Engine, Vortec 6.0L V8 SFI
MT1	Transmission, 4-speed automatic, heavy-duty
MW3	Transmission, 5-speed manual
MW7	Transmission, Allison 1000 6-speed automatic
NB8	Emissions override
NC7	Emissions override, Federal
NE1	Emissions, Maine, Massachusetts, New York or Vermont state requirements
NP1	Transfer case, electronic shift
NP2	Transfer case, floor-mounted shifter
NP5	Steering wheel, leather-wrapped, Black
NZ7	Wheels, 4 - 16" x 7" (40.6 cm x 17.8 cm) 8-lug chrome-clad steel
NZZ	Skid Plate Package
P06	Wheels, 6 - 16" x 6.5" (40.6 cm x 16.5 cm) 8-lug steel
PDB	OnStar Plus Package
PDN	Heavy-Duty Power Package
PPB	Regular production accessory, Pickup bed extender, brushed aluminum
QC1	Wheels, 4 - 16" x 7.0" (40.6 cm x 17.8 cm) 8-lug steel (single rear wheel)
QER	Tires, LT265/75R16E on-/off-road, blackwall
R6Q	OnStar Plus Package discount not desired
R6Y	Heavy-Duty Power Package discount not desired
R8G	OnStar 1 Additional Year of Safe and Sound Service (MSRP= $199)
R8P	OnStar 2 Additional Years of Safe and Sound Service (MSRP=$379)
R8U	OnStar 3-Years Safe and Sound Service (MSRP=$679)
R8V	OnStar 3-Years Directions and Connections Service (MSRP=$979)
R8W	OnStar 1-Year Directions and Connections Service (MSRP=$100)
R8Y	OnStar 2-Years Directions and Connections Service (MSRP=$399)
R8Z	OnStar 3-Years Directions and Connections Service (MSRP=$679)
RFA	OnStar 1-Year Business Vehicle Manager Service (MSRP=$25)
RFB	OnStar 2-Years Business Vehicle Manager Service (No charge)

Option Code	Description
RFC	OnStar 3-Years Business Vehicle Manager Service (No Charge)
SAF	Spare tire lock
T96	Fog lamps, front
TGK	Solid PaintSEO solid paint, one color
TP2	Battery, auxiliary heavy-duty 600 cold-cranking amps
TQ3	Battery, heavy-duty dual 770 cold-cranking amps
TR3	Grille, color-keyed surround with chrome accent bar
U01	Lamps, Amber roof marker
U2K	XM Satellite Radio
U42	Entertainment system, rear seat DVD player
UB0	Audio system, AM/FM stereo with CD player
UC6	Audio system, AM/FM stereo with 6-disc CD changer
UE1	OnStar, 1-year of Safe and Sound plan
UG1	Universal Home Remote
UK3	Steering wheel controls, mounted audio and Driver Information Center controls
UK6	Audio system controls, rear
UM7	Audio system, AM/FM stereo
UQ3	Audio system feature, speaker system
UQ5	Audio system feature, 4-speaker system
UQ7	Audio system feature, Bose premium speaker system
UY2	Trailering wiring provisions, for camper, fifth wheel and gooseneck trailer
V10	Covers, radiator grille and front bumper openings
V43	Bumper, rear painted
V76	Recovery hooks, front, frame-mounted
VAB	Ship Thru for Models C*35953 and CK35903 (MSRP = $165.00)Produced in Pontiac Assembly and shipped to NBC Truck Equipment
VAY	Ship Thru for Models C*35953 and CK35903 (MSRP = $165.00)Produced in Pontiac Assembly and shipped to K&B Mounting
VB3	Bumper, rear chrome
VBK	Ship Thru for Models C*35**3 (MSRP = $270.00)Produced in Pontiac Assembly and shipped to Ft. Wayne Fleet Equipment
VCB	Ship Thru for Models C*35943 (MSRP = $120.00)Produced in Flint Assembly and shipped to Monroe Truck Equipment
VF7	Bumper, rear delete
VFW	Ship Thru for Models C*35943 (MSRP = $255.00)Produced in Flint Assembly and shipped to NBC Truck Equipment
VG3	Bumper, front chrome with Gray lower
VGH	Ship Thru for Models C*35953 and CK35903 (MSRP = $160.00)Produced in Pontiac Assembly and shipped to Monroe Truck Equipment
VGS	Ship Thru for models C*35943 (MSRP = $130.00)Produced in Flint Assembly and shipped to Select Solutions Group Corp. in Flint, Michigan.
VGZ	Ship Thru for Models C*35953 and CK35903 (MSRP = $165.00)Produced in Pontiac Assembly and shipped to Canfield
VSQ	Ship Thru for Models C*35943 (MSRP = $270.00)Produced in Flint Assembly and shipped to Monroe Truck Equipment
VUD	Ship Thru for Models C*35943 (MSRP = $120.00)Produced in Flint Assembly and shipped to Knapheide Truck Equipment
VUI	Ship Thru for Models C*35943 (MSRP = $295.00)Produced in Flint Assembly and shipped to Ft. Wayne Fleet Equipment
VUM	Ship Thru for Models C*35943 (MSRP = $375.00)Produced in Flint Assembly and shipped to

Option Code	Description
	Buckeye Truck Equipment
VWS	Ship Thru for Models C*35953 and CK35903 (MSRP = $310.00)Produced in Pontiac Assembly and shipped to Buckeye Truck Equipment
VYC	Ship Thru for Models C*35953 and CK35903 (MSRP = $160.00)Produced in Pontiac Assembly and shipped to Knapheide Truck Equipment
VYS	Ship Thru for Models C*35953 and CK35903 (MSRP = $165.00)Produced in Pontiac Assembly and shipped to Masterack Truck Equipment
VYU	Snow Plow Prep Package
XEC	Tires, LT215/85R16E all-season, blackwall
XEF	Tires, LT215/85R16E on-/off-road, blackwall
XYK	Tires, LT215/85R16D all-season, blackwall
YF5	Emissions, California state requirements
Z82	Trailering equipment, heavy-duty
Z85	Suspension Package, Handling/Trailering, heavy-duty
ZEC	Tire, spare LT215/85R16E all-season, blackwall
ZEF	Tire, spare LT215/85R16E, on-/off-road, blackwall
ZER	Tire, spare LT265/75R16E on-/off-road, blackwall
ZW9	Pickup box, delete
ZY1	Paint, solid
ZYK	Tire, spare LT215/85R16D all-season, blackwall

Updates for Silverado 3500 Classic

Week of 7/17/2006

Effective 7/17/2006, the following changes will be made to the Vehicle Order Guide:

- Interior section-Air bags, frontal, changed footnote #1 to read "Regular and Extended Cab models includes passenger-side deactivation switch. Never place a rear-facing infant restraint in the front seat of any vehicle equipped with an active frontal air bag. Always use safety belts and the correct child restraints for your child's age and size. Children are safer when properly secured in a rear seat. See the vehicle's Owner's Manual and child safety seat instructions for more safety information.".

Week of 7/10/2006

Effective 7/10/2006, the following changes will be made to the Vehicle Order Guide:

- SEO Ship Thru section- (5B5) Power windows and mirrors, Updated extended description to read "Provides power driver and passenger windows on a base trim level, includes SEO (5M1) LH and RH outside power adjustable, manual folding, non-heated, non-extendable mirrors and up level door panels. The mirror head is the same size and configuration as the base power mirror on LT Décor." Updated restriction to read "Requires RPO (AU3) power programmable door locks. Power mirrors can be upgraded to SEO (6P3) remote control, power-extendable camper mirrors.".
- SEO Ship Thru section- (5M1) Changed option to a reference only code and updated main description to read "Mirror, exterior, power adjustable, manual folding, non-heated and non-extendable". Added extended description to read "Provides the left and right hand side outside power adjustable, manual folding, non-heated, non-extendable, rear view mirrors that are included with SEO (5B5) Power windows and mirrors. Mirror head is the same size and configuration as the base mirror supplied on first tire Uplevel Décors except that the mirror head is not heated and not extendable." Updated restriction to read "Included and only available with SEO (5B5) power windows and mirrors.".

Week of 6/19/2006

Effective 6/19/2006, the following changes will be made to the Vehicle Order Guide:

- All sections-Removed the word "Federal" anywhere it used to say "Requires a Fleet or Federal Government order type.
- All sections-removed the hundred designation (ex: 5300) from all engine descriptions and replaced it with liters designation (ex: 5.3L). Please review entire order guide to see where it changed.

Week of 6/5/2006

Effective 6/5/2006, the following changes will be made to the Vehicle Order Guide:

- Interior section-(U42) Entertainment system, changed symbol from "A2" to "A1" in 3LT column. Also, deleted footnote #2 entirely.
- Mechanical section-(L18) Engine, Vortec 8100 V8 SFI, changed symbol from "A" to "A1" in 1WT, 1LS and 1LT columns. Also, added footnote #1 that reads "Not available with CC35903 models.".
- Mechanical section-(LBZ) Engine, Duramax 6600 Turbo Diesel V8, changed footnote #1 to read "Requires (MW7) Allison 1000 6-speed automatic transmission. Includes (TQ3) heavy-duty dual, 770 cold-cranking-amp batteries, (KG3) 145-amp alternator, (K47) high-capacity air cleaner and (K05) engine block heater. Not available with CC35903 models.".

Week of 5/29/2006

Effective 5/29/2006, the following changes will be made to the Vehicle Order Guide:

- Mechanical section-(VYU) Snow Plow Prep Package, changed extended description to read "includes 10-amp power for backup and roof emergency light, (KG3) 145-amp alternator, high-flow front bumper, forward lamp wiring harness, 1.65" (42 mm) access hole with grommet in front of dash panel, roof beacon lamp provisions with switch on the instrument panel, instrument panel jumper wiring harness for electric trailer brake controller, (K47) high-capacity air cleaner and (NZZ) Skid Plate Package".
- SEO Ship Thru section-(VGR) Ship Thru for Models C*35903 and C*35953 (MSRP = $505.00) Produced in Pontiac Assembly and shipped to OEM Systems (in Centreville, IL) and onto Wentzville Assembly Center, Delete Option Entirely.

Week of 5/22/2006

Effective 5/22/2006, the following changes will be made to the Vehicle Order Guide:

- OnStar Fleet Options section-please review entire section as many changes have been made.

Week of 5/15/2006

Effective 5/15/2006, the following changes will be made to the Vehicle Order Guide:

- SEO Ship Thru section-Added (VGR) Ship Thru for Models C*35903 and C*35953, updated price to "(MSRP = $505.00)".
- SEO Ship Thru section-Added (VGS) Ship Thru for Models C*35943 (MSRP = W/A) Produced in Flint Assembly and shipped to Select Solutions Group Corp in Flint, Michigan.

Week of 5/1/2006

Effective 5/1/2006, the following changes will be made to the Vehicle Order Guide:

- Interior section-(DNH) Regular production accessory, Underseat storage, changed footnote to read "Requires Extended Cab models. For additional GM Accessory Offerings and Installation, please contact your local GM Accessory Distributor Installer (ADI).".
- Exterior section-(BVE) Regular production accessory, Assist steps, chrome plated tubular, changed footnote #1 to read "Not available with (ZW9) pickup box delete. For additional GM Accessory Offerings and Installation, please contact your local GM Accessory Distributor Installer (ADI).".
- Exterior section-(BVS) Regular production accessory, Assist steps, Black coated tubular, changed footnote #1 to read "Not available with (ZW9) pickup box delete. For additional GM Accessory Offerings and Installation, please contact your local GM Accessory Distributor Installer (ADI).".
- Exterior section-(PPB) Regular production accessory, Pickup bed extender, brushed aluminum, changed footnote #1 to read "Not available with (ZW9) pickup box delete. For additional GM Accessory Offerings and Installation, please contact your local GM Accessory Distributor Installer (ADI).".
- Exterior section-(E95) Regular production accessory, Tonneau cover, Black, soft, changed footnote to read "Not available with (ZW9) pickup box delete. For additional GM Accessory Offerings and Installation, please contact your local GM Accessory Distributor Installer (ADI).".
- Exterior section-(EN6) Regular production accessory, Tonneau cover, Black, hard, changed footnote to read "Not available with (ZW9) pickup box delete. For additional GM Accessory Offerings and Installation, please contact your local GM Accessory Distributor Installer (ADI).".

Week of 4/24/2006

Effective 4/24/2006, the following changes will be made to the Vehicle Order Guide:

- Interior section-(CJ3) Air conditioning, dual-zone manual climate control, changed symbol from "A1" to "S" in 1WT column. Also, changed footnote #1 to read "Required and only available when (VYU) Snow Plow Prep Package is ordered.". Also, changed symbol from "A2" to "A1" on 2LT and 3LT columns. Also, deleted footnote #2 entirely.
- Interior section-(C42) Air conditioning delete, changed symbol from "S1" to "A1". Also moved RPO from Reference Only column to Free Flow column.
- Interior section-(U2K) XM Satellite Radio, changed extended description to read " With a wide variety of programming, XM has something to excite any driver. Whether you want to be entertained or informed, to laugh, think, or sing, XM has the perfect channel for you - coast-to-coast, and in digital-quality sound. 3 trial months - no obligation". Also, changed footnote to read "Available in the 48 contiguous United States. Required $12.95 monthly subscription sold separately. All fees and programming subject to change. Subscription subject to customer agreement. For more information, visit gm.xmradio.com.".

Week of 4/17/2006

Effective 4/17/2006, the following changes will be made to the Vehicle Order Guide:

- Interior section-(UC6) Audio system, AM/FM stereo with 6-disc CD changer, changed extended description to read " seek-and-scan, digital clock, auto-tone control, Radio Data System (RDS), speed-compensated volume, and TheftLock".

Also, changed symbol from "A1" to "A" in 1LT column and deleted footnote #1 entirely.

Week of 4/3/2006

Effective 4/3/2006, the following changes will be made to the Vehicle Order Guide:

- Interior section-(CJ3) Air conditioning, dual-zone manual climate control, changed symbol from "S" to "A1" in 1WT column. Also, changed footnote #1 to read "Standard on Extended and Crew Cab Models.". Also, added footnote #2 that reads "Required and only available when (VYU) Snow Plow Prep Package is ordered." and applies to 2LT and 3LT columns.
- Interior section-(C42) Air conditioning delete, changed symbol from "A1" to "S1". Also moved RPO from Free Flow column to Reference only column.

S = Standard Equipment A = Available -- (dashes) = Not Available D = ADI Available
■ = Included in Equipment Group □ = Included in Equipment Group but upgradeable

*Indicates availability of feature on multiple models. For example, it indicates feature availability on 2WD and 4WD Models or Rear wheel drive and All-wheel drive Models.

Codes listed in the shaded column titled Ref. Only RPO Code are for internal use only and should not be ordered.

Free Flow RPO Code	Ref. Only RPO Code	Description 1 - Equipment group 1WT, 1LS, and 1LT available on C*36003, C*36403 and C*36053 Models. 2 - Equipment group 2LT available on C*36053 Models.	Reg. and Ext. Cab			Ext. Cab
			Work Truck 1WT[1]	LS 1LS[1]	LT1 1LT[1]	LT2 2LT[2]
		Air bags, frontal, driver and right-front passenger with passenger-side deactivation switch 1 - Never place a rear-facing infant restraint in the front seat of any vehicle equipped with an active frontal air bag. Always use safety belts and the correct child restraints for your child's age and size. Children are safer when properly secured in a rear seat. See the vehicle's Owner's Manual and child safety seat instructions for more safety information.	S[1]	S[1]	S[1]	S[1]
CJ3		**Air conditioning**, dual-zone manual climate control with individual climate settings for driver and right-front passenger 1 - Required and only available when (VYU) Snow Plow Prep Package is selected.	S	S	S	A[1]
		Assist handle, front passenger 1 - Also includes rear outboard passenger assist handle on Extended Cab models.	S[1]	S[1]	S[1]	S[1]
	UM7	**Audio system**, AM/FM stereo with seek-and-scan and digital clock	S	--	--	--
	UQ5	**Audio system feature, 4-speaker system**	S	S	--	--
		Cigarette lighter, on instrument panel	S	S	S	S
		Coat hook, driver-side rear 1 - Also includes passenger-side coat hook on Extended Cab models.	S[1]	S[1]	S[1]	S[1]
		Cup holders, front 1 - Also includes rear cupholders on Extended Cab models.	S[1]	S[1]	S[1]	S[1]
		Driver Information Center that monitors numerous different systems depending on vehicle equipment	S	S	S	S
BG9		**Floor covering**, Black rubberized-vinyl 1 - Not available with (922) Medium Gray leather seating surfaces.	S	S	A[1]	--
		Instrumentation, analog with speedometer, odometer with trip odometer, fuel level, voltmeter, engine temperature, oil pressure and tachometer	S	S	S	S
		Lighting, interior with dome and reading lights, backlit instrument panel switches and door handle-activated illuminated entry	S	S	S	S
		Mirror, inside rearview manual day/night	S	S	--	--
		Power outlets, 2 auxiliary instrument panel-mounted with covers, 12-volt	S	S	S	S

Free Flow RPO Code	Ref. Only RPO Code	Description 1 - Equipment group 1WT, 1LS, and 1LT available on C*36003, C*36403 and C*36053 Models. 2 - Equipment group 2LT available on C*36053 Models.	Reg. and Ext. Cab			Ext. Cab
			Work Truck 1WT[1]	LS 1LS[1]	LT1 1LT[1]	LT2 2LT[2]
	**V	**Seat trim**, vinyl	S	A	--	--
	**D	**Seat trim**, Custom Cloth	A	S	S	S
	AE7	**Seats**, front 40/20/40 split-bench, 3-passenger, driver and front passenger manual reclining with outboard head restraints 1 - Not available with (YF2) Ambulance Package.	S	A[1]	--	--
		Seat, rear folding bench, 3-passenger (includes child seat top tether anchor) 1 - Standard on Extended Cab models only.	S[1]	S[1]	S[1]	S
		Steering column, Tilt-Wheel, adjustable with brake/transmission shift interlock	S	S	S	S
		Steering wheel, includes theft-deterrent locking feature	S	S	--	--
		Theft-deterrent system, PASSlock II	S	S	S	S
		Tools, mechanical jack and wheel wrench located in back of cab	S	S	S	S
		Visors, driver and front passenger, padded with cloth trim, extenders, pocket on driver-side and vanity mirror on passenger-side, Shale-colored	S	S	S	S
		Warning tones, headlamp on, key-in-ignition, driver and passenger buckle up reminder and turn signal on	S	S	S	S
		Windows, swing-out rear quarter 1 - Standard on Extended Cab models only.	S[1]	S[1]	S[1]	S
		Air dam, Gray	S	S	S	S
	ZW9	**Body**, Chassis Cab	S	S	S	S
	VG3	**Bumper**, front chrome with Gray lower	S	S	S	S
		Daytime Running Lamps, with automatic exterior lamp control	S	S	S	S
		Glass, Solar-Ray light-tinted, all windows	S	S	--	--
	TR3	**Grille**, color-keyed surround with chrome accent bar	S	S	S	S
		Headlamps, dual halogen composite with automatic exterior lamp control and flash-to-pass feature	S	S	S	S
	U01	**Lamps**, Amber roof marker	S	S	S	S
	TS9	**Lamp delete**, LED center high-mounted stop/brake (CHMSL) delete and cargo area, delete 1 - Standard with 4x4 models only. 2 - Standard with 4x4 models only. Included and only available with (YF2) Ambulance Package.	S[1]	A[2]	A[2]	S[1]
	D44	**Mirrors**, outside manual, Black, manual-folding	S	S	--	--
	ZY1	**Paint**, solid	S	S	S	S
	V76	**Recovery hooks**, front, frame-mounted	S	S	S	S

2007 Chevrolet Truck Silverado 3500 STANDARD EQUIPMENT
CC Classic

Free Flow RPO Code	Ref. Only RPO Code	Description 1 - Equipment group 1WT, 1LS, and 1LT available on C*36003, C*36403 and C*36053 Models. 2 - Equipment group 2LT available on C*36053 Models.	Reg. and Ext. Cab			Ext. Cab
			Work Truck 1WT[1]	LS 1LS[1]	LT1 1LT[1]	LT2 2LT[2]
		Wheels, 6 - 16" x 6.5" (40.6 cm x 16.5 cm) 8-lug painted steel (dual rear), includes painted center caps and steel spare	S	--	--	--
	B71	**Wheel flares**, front only	S	S	S	S
		Wipers, front intermittent wet-arm with pulse washers	S	S	S	S
	K68	**Alternator**, 105 amps 1 - Not available with (VYU) Snow Plow Prep Package. 2 - Not available with (VYU) Snow Plow Prep Package or (YF2) Ambulance Package.	S[1]	S[2]	S[2]	S[1]
		Battery, heavy-duty 600 cold-cranking amps, maintenance-free with rundown protection and retained accessory power 1 - Not standard with (LBZ) Duramax 6.6L Turbo Diesel V8 engine.	S[1]	S[1]	S[1]	S[1]
		Brakes, 4-wheel antilock, 4-wheel disc	S	S	S	S
	KC4	**Cooling**, external engine oil cooler, heavy-duty air-to-oil, integral to driver-side of radiator tank	S	S	S	S
	LQ4	**Engine**, Vortec 6.0L V8 SFI (300 hp [223.8 kW] @ 4400 rpm, 360 lb-ft of torque [486.6 N-m] @ 4000 rpm) 1 - Not available with (YF2) Ambulance Package.	S	S[1]	S[1]	S
		Exhaust, aluminized stainless-steel muffler and tailpipe	S	S	S	S
		Frame, hydroformed ladder-type	S	S	S	S
	C7W	**GVWR**, 11,400 lbs. (5171 kg) 1 - Standard with 2WD models only.	S[1]	S[1]	S[1]	S[1]
	C7L	**GVWR**, 12,000 lbs. (5443 kg) 1 - Standard with 4x4 models only.	S[1]	S[1]	S[1]	S[1]
	GT5	**Rear axle**, 4.10 ratio 1 - Refer to Engine/Axle chart for availability. 2 - Refer to Engine/Axle chart for availability. Not available with (YF2) Ambulance Package.	S[1]	S[2]	S[2]	S[1]
		Steering, power	S	S	S	S
		Suspension, front independent with torsion bar and stabilizer bar	S	S	S	S
		Suspension, rear 3-stage springs	S	S	S	S
	Z85	**Suspension Package**, Handling/Trailering, heavy-duty, includes 36 mm piston monotube shocks	S	S	S	S
	NP2	**Transfer case**, floor-mounted shifter 1 - Standard with 4x4 models. Requires (AE7) front 40/20/40 split-bench seat.	S[1]	S[1]	S[1]	--
	MW3	**Transmission**, 5-speed manual with overdrive 1 - Requires (LQ4) Vortec 6.0L V8 SFI engine.	S[1]	S[1]	S[1]	--

2007 Chevrolet Truck Silverado 3500 STANDARD EQUIPMENT
CC Classic

Free Flow RPO Code	Ref. Only RPO Code	Description 1 - Equipment group 1WT, 1LS, and 1LT available on C*36003, C*36403 and C*36053 Models. 2 - Equipment group 2LT available on C*36053 Models.	Reg. and Ext. Cab			Ext. Cab
			Work Truck 1WT[1]	LS 1LS[1]	LT1 1LT[1]	LT2 2LT[2]
MT1		**Transmission**, 4-speed automatic, heavy-duty, electronically controlled with overdrive and tow/haul mode. Includes (KNP) external transmission oil cooler 1 - Requires (LQ4) Vortec 6.0L V8 SFI engine.	A[1]	A[1]	A[1]	S[1]

S = Standard Equipment A = Available -- (dashes) = Not Available D = ADI Available
■ = Included in Equipment Group □ = Included in Equipment Group but upgradeable

No deletions allowed to Equipment Groups. Additional options may be added; check ordering information section for compatibility.

*Indicates availability of feature on multiple models. For example, it indicates feature availability on 2WD and 4WD Models or Rear wheel drive and All-wheel drive Models.

Codes listed in the shaded column titled Ref. Only RPO Code are for internal use only and should not be ordered.

Free Flow RPO Code	Ref. Only RPO Code	Description 1 - Equipment group 1WT, 1LS, and 1LT available on C*36003, C*36403 and C*36053 Models. 2 - Equipment group 2LT available on C*36053 Models.	Reg. and Ext. Cab Work Truck 1WT[1]	Reg. and Ext. Cab LS 1LS[1]	Reg. and Ext. Cab LT1 1LT[1]	Ext. Cab LT2 2LT[2]
CJ2		**Air conditioning**, dual-zone automatic climate control with individual climate settings for driver and right-front passenger 1 - Requires Extended Cab models. Not available with (VYU) Snow Plow Prep Package. 2 - Must be substituted with (CJ3) dual-zone manual air conditioning when (VYU) Snow Plow Prep Package is ordered.	--	--	A[1]	□[2]
UB0		**Audio system**, AM/FM stereo with CD player, seek-and-scan, digital clock, auto-tone control, Radio Data System (RDS) and speed-compensated volume 1 - Upgradeable to (UC6) AM/FM stereo with 6-disc in-dash CD changer.	A	■	□[1]	□[1]
	UQ3	**Audio system feature**, speaker system 1 - Includes 4 speakers on Regular Cab and 6 speakers on Extended Cab Models.	--	--	■[1]	--
	UQ7	**Audio system feature**, Bose premium speaker system with sub-woofer in center console 1 - Included and only available with (A95) front reclining bucket seats.	--	--	A[1]	■
	D07	**Console**, floor with storage compartment and dual cup holders 1 - Included and only available with (A95) front reclining bucket seats.	--	--	A[1]	■
	DK7	**Console**, overhead mini with map lights	--	--	■	■
K34		**Cruise control**, electronic with set and resume speed	A	■	■	■
C49		**Defogger**, rear-window electric 1 - Not available with (C42) air conditioning delete. Available with Fleet and Government order types only.	A[1]	■	■	■
AU3		**Door locks**, power 1 - Available with Fleet and Government order types only.	A[1]	A	■	■
B30		**Floor covering**, color-keyed carpeting 1 - Available with Fleet and Government order types only. Not available with (**V) vinyl seat trim. 2 - Not available with (**V) vinyl interior trim. 3 - May be substituted with (BG9) rubberized vinyl floor covering. Not available with (**V) vinyl seat trim.	A[1]	A[2]	□[3]	■
	DF5	**Mirror**, inside rearview auto-dimming with 8-point compass and outside temperature display	--	--	■	■

Free Flow RPO Code	Ref. Only RPO Code	Description 1 - Equipment group 1WT, 1LS, and 1LT available on C*36003, C*36403 and C*36053 Models. 2 - Equipment group 2LT available on C*36053 Models.	Reg. and Ext. Cab Work Truck 1WT[1]	Reg. and Ext. Cab LS 1LS[1]	Reg. and Ext. Cab LT1 1LT[1]	Ext. Cab LT2 2LT[2]
	AU0	**Remote Keyless Entry**, with 2 transmitters, panic button and content theft alarm	--	--	■	■
	AE7	**Seats**, front 40/20/40 split-bench, 3-passenger, driver and front passenger manual reclining, center fold-down armrest with storage, adjustable outboard head restraints and storage pockets on Extended Cab models 1 - Requires (**D) Custom Cloth seat trim. 2 - Not available with (YF2) Ambulance Package.	A[1]	■[1]	■[2]	--
A95		**Seats**, front bucket, includes (AG1) 6-way power driver seat adjuster, front passenger manual recline, adjustable outboard head restraints, inboard armrests and storage pockets 1 - Required with (YF2) Ambulance Package. Available to order with Fleet and Government Order Types only on Extended Cab Models. Includes (D07) floor console and (UQ7) Bose Premium speaker system. On 4WD Models, also requires (NP1) electronic shift transfer case.	--	--	A[1]	■
AG1		**Seat adjuster**, driver 6-way power 1 - Included with (**2) Seat trim, Leather seating surfaces on Extended Cab Models. - Included with (A95) front reclining bucket seats when (YF2) Ambulance Package is ordered or with a Fleet or Government Order.	--	--	A[1]	■
	NP5	**Steering wheel**, leather-wrapped, Black with theft-deterrent locking feature	--	--	■	■
UK3		**Steering wheel controls**, mounted audio and Driver Information Center controls which provides access to enhanced Driver Information Center features and information	--	--	A	■
	A31	**Windows**, power with driver and front passenger Express-Down	--	--	■	■
T96		**Fog lamps**, front, halogen 1 - Requires (V76) front frame-mounted recovery hooks. Not available with 4x4 models or (YF2) Ambulance Package. 2 - Not available with 4x4 models.	--	--	A[1]	■[2]
AJ1		**Glass**, Solar-Ray deep-tinted (all windows except light-tinted glass on windshield and driver- and front passenger-side glass)	A	A	■	■
	DL8	**Mirrors**, outside heated power-adjustable, Black, manual-folding 1 - Upgradeable to (DPN) outside vertical camper mirrors.	--	--	□[1]	□[1]
	P06	**Wheels**, 6 - 16" x 6.5" (40.6 cm x 16.5 cm) 8-lug steel, with bright metal rings, chrome center caps and steel spare	--	■	■	■
NP1		**Transfer case**, electronic shift with push-button controls 1 - Requires 4x4 models. Requires (MT1) heavy-duty 4-speed automatic transmission or (MW7) Allison 1000 6-speed automatic transmission. 2 - Requires 4x4 models.	--	--	A[1]	■[2]

S = Standard Equipment A = Available -- (dashes) = Not Available D = ADI Available
■ = Included in Equipment Group □ = Included in Equipment Group but upgradeable

No deletions allowed to Equipment Groups. Additional options may be added; check ordering information section for compatibility.

*Indicates availability of feature on multiple models. For example, it indicates feature availability on 2WD and 4WD Models or Rear wheel drive and All-wheel drive Models.

Codes listed in the shaded column titled Ref. Only RPO Code are for internal use only and should not be ordered.

Free Flow RPO Code	Ref. Only RPO Code	Description 1 - Equipment group 1WT, 1LS, and 1LT available on C*36003, C*36403 and C*36053 Models. 2 - Equipment group 2LT available on C*36053 Models.	Reg. and Ext. Cab Work Truck 1WT[1]	Reg. and Ext. Cab LS 1LS[1]	Reg. and Ext. Cab LT1 1LT[1]	Ext. Cab LT2 2LT[2]
CJ2		**Air conditioning**, dual-zone automatic climate control with individual climate settings for driver and right-front passenger 1 - Requires Extended Cab models. Not available with (VYU) Snow Plow Prep Package. 2 - Must be substituted with (CJ3) dual-zone manual air conditioning when (VYU) Snow Plow Prep Package is ordered.	--	--	A[1]	□[2]
UB0		**Audio system**, AM/FM stereo with CD player, seek-and-scan, digital clock, auto-tone control, Radio Data System (RDS) and speed-compensated volume 1 - Upgradeable to (UC6) AM/FM stereo with 6-disc in-dash CD changer.	A	■	□[1]	□[1]
	UQ3	**Audio system feature**, speaker system 1 - Includes 4 speakers on Regular Cab and 6 speakers on Extended Cab Models.	--	--	■[1]	--
	UQ7	**Audio system feature**, Bose premium speaker system with sub-woofer in center console 1 - Included and only available with (A95) front reclining bucket seats.	--	--	A[1]	■
	D07	**Console**, floor with storage compartment and dual cup holders 1 - Included and only available with (A95) front reclining bucket seats.	--	--	A[1]	■
	DK7	**Console**, overhead mini with map lights	--	--	■	■
K34		**Cruise control**, electronic with set and resume speed	A	■	■	■
C49		**Defogger**, rear-window electric 1 - Not available with (C42) air conditioning delete. Available with Fleet and Government order types only.	A[1]	■	■	■
AU3		**Door locks**, power 1 - Available with Fleet and Government order types only.	A[1]	A	■	■
B30		**Floor covering**, color-keyed carpeting 1 - Available with Fleet and Government order types only. Not available with (**V) vinyl seat trim. 2 - Not available with (**V) vinyl interior trim. 3 - May be substituted with (BG9) rubberized vinyl floor covering. Not available with (**V) vinyl seat trim.	A[1]	A[2]	□[3]	■
	DF5	**Mirror**, inside rearview auto-dimming with 8-point compass and outside temperature display	--	--	■	■

Free Flow RPO Code	Ref. Only RPO Code	Description 1 - Equipment group 1WT, 1LS, and 1LT available on C*36003, C*36403 and C*36053 Models. 2 - Equipment group 2LT available on C*36053 Models.	Reg. and Ext. Cab Work Truck 1WT[1]	Reg. and Ext. Cab LS 1LS[1]	Reg. and Ext. Cab LT1 1LT[1]	Ext. Cab LT2 2LT[2]
	AU0	**Remote Keyless Entry**, with 2 transmitters, panic button and content theft alarm	--	--	■	■
	AE7	**Seats**, front 40/20/40 split-bench, 3-passenger, driver and front passenger manual reclining, center fold-down armrest with storage, adjustable outboard head restraints and storage pockets on Extended Cab models 1 - Requires (**D) Custom Cloth seat trim. 2 - Not available with (YF2) Ambulance Package.	A[1]	■[1]	■[2]	--
A95		**Seats**, front bucket, includes (AG1) 6-way power driver seat adjuster, front passenger manual recline, adjustable outboard head restraints, inboard armrests and storage pockets 1 - Required with (YF2) Ambulance Package. Available to order with Fleet and Government Order Types only on Extended Cab Models. Includes (D07) floor console and (UQ7) Bose Premium speaker system. On 4WD Models, also requires (NP1) electronic shift transfer case.	--	--	A[1]	■
AG1		**Seat adjuster**, driver 6-way power 1 - Included with (**2) Seat trim, Leather seating surfaces on Extended Cab Models. - Included with (A95) front reclining bucket seats when (YF2) Ambulance Package is ordered or with a Fleet or Government Order.	--	--	A[1]	■
	NP5	**Steering wheel**, leather-wrapped, Black with theft-deterrent locking feature	--	--	■	■
UK3		**Steering wheel controls**, mounted audio and Driver Information Center controls which provides access to enhanced Driver Information Center features and information	--	--	A	■
	A31	**Windows**, power with driver and front passenger Express-Down	--	--	■	■
T96		**Fog lamps**, front, halogen 1 - Requires (V76) front frame-mounted recovery hooks. Not available with 4x4 models or (YF2) Ambulance Package. 2 - Not available with 4x4 models.	--	--	A[1]	■[2]
AJ1		**Glass**, Solar-Ray deep-tinted (all windows except light-tinted glass on windshield and driver- and front passenger-side glass)	A	A	■	■
	DL8	**Mirrors**, outside heated power-adjustable, Black, manual-folding 1 - Upgradeable to (DPN) outside vertical camper mirrors.	--	--	□[1]	□[1]
	P06	**Wheels**, 6 - 16" x 6.5" (40.6 cm x 16.5 cm) 8-lug steel, with bright metal rings, chrome center caps and steel spare	--	■	■	■
NP1		**Transfer case**, electronic shift with push-button controls 1 - Requires 4x4 models. Requires (MT1) heavy-duty 4-speed automatic transmission or (MW7) Allison 1000 6-speed automatic transmission. 2 - Requires 4x4 models.	--	--	A[1]	■[2]

ADDITIONAL OPTIONS

Free Flow RPO Code	Ref. Only RPO Code	Description 1 - Equipment group 1WT, 1LS, and 1LT available on C*36003, C*36403 and C*36053 Models. 2 - Equipment group 2LT available on C*36053 Models.	Reg. and Ext. Cab			Ext. Cab
			Work Truck 1WT[1]	LS 1LS[1]	LT1 1LT[1]	LT2 2LT[2]
CJ3		**Air conditioning**, dual-zone manual climate control with individual climate settings for driver and right-front passenger 1 - Required and only available when (VYU) Snow Plow Prep Package is selected.	S	S	S	A[1]
C42		**Air conditioning delete**, provides heater only 1 - Requires Regular Cab models.	A[1]	--	--	--
CJ2		**Air conditioning**, dual-zone automatic climate control with individual climate settings for driver and right-front passenger 1 - Requires Extended Cab models. Not available with (VYU) Snow Plow Prep Package. 2 - Must be substituted with (CJ3) dual-zone manual air conditioning when (VYU) Snow Plow Prep Package is ordered.	--	--	A[1]	□[2]
UB0		**Audio system**, AM/FM stereo with CD player, seek-and-scan, digital clock, auto-tone control, Radio Data System (RDS) and speed-compensated volume 1 - Upgradeable to (UC6) AM/FM stereo with 6-disc in-dash CD changer.	A	■	□[1]	□[1]
UC6		**Audio system**, AM/FM stereo with 6-disc CD changer, seek-and-scan, digital clock, auto-tone control, Radio Data System (RDS), speed-compensated volume and TheftLock	--	--	A	A
K34		**Cruise control**, electronic with set and resume speed	A	■	■	■
C49		**Defogger**, rear-window electric 1 - Not available with (C42) air conditioning delete. Available with Fleet and Government order types only.	A[1]	■	■	■
AU3		**Door locks**, power 1 - Available with Fleet and Government order types only.	A[1]	A	■	■
BG9		**Floor covering**, Black rubberized-vinyl 1 - Not available with (922) Medium Gray leather seating surfaces.	S	S	A[1]	--
B30		**Floor covering**, color-keyed carpeting 1 - Available with Fleet and Government order types only. Not available with (**V) vinyl seat trim. 2 - Not available with (**V) vinyl interior trim. 3 - May be substituted with (BG9) rubberized vinyl floor covering. Not available with (**V) vinyl seat trim.	A[1]	A[2]	□[3]	■

ADDITIONAL OPTIONS

Free Flow RPO Code	Ref. Only RPO Code	Description 1 - Equipment group 1WT, 1LS, and 1LT available on C*36003, C*36403 and C*36053 Models. 2 - Equipment group 2LT available on C*36053 Models.	Reg. and Ext. Cab			Ext. Cab
			Work Truck 1WT[1]	LS 1LS[1]	LT1 1LT[1]	LT2 2LT[2]
UE1		**OnStar**, 1-year of Safe and Sound plan. Includes Automatic Notification of Air Bag Deployment, Stolen Vehicle Location Assistance, Emergency Services, Roadside Assistance, Remote Door Unlock, OnStar Vehicle Diagnostics, Hands-Free Calling, AccidentAssist and Remote Horn & Lights 1 - OnStar services require vehicle electrical system (including battery), wireless service and GPS satellite signals to be available and operating for features to function properly. OnStar acts as a link to existing emergency service providers. OnStar Vehicle Diagnostics available on most 2004 MY and newer GM vehicles. Diagnostic capability varies by model. Visit onstar.com for system limitations and details. Requires (UK3) steering-wheel mounted audio controls. Not available with a ship-to of Puerto Rico or the Virgin Islands.	--	--	A[1]	A[1]
PDB		**OnStar Plus Package**, includes (U2K) XM Satellite Radio, (UE1) OnStar and (UK3) steering-wheel mounted audio controls 1 - Package does not include (U2K) XM Satellite Radio when ordered outside the 48 contiguous United States. Not available with a ship-to of Puerto Rico or the Virgin Islands.	--	--	A[1]	A[1]
R6Q		**OnStar Plus Package discount not desired** 1 - Required when content within option package is ordered and entire package is not desired.	--	--	A[1]	A[1]
A95		**Seats**, front bucket, includes (AG1) 6-way power driver seat adjuster, front passenger manual recline, adjustable outboard head restraints, inboard armrests and storage pockets 1 - Required with (YF2) Ambulance Package. Available to order with Fleet and Government Order Types only on Extended Cab Models. Includes (D07) floor console and (UQ7) Bose Premium speaker system. On 4WD Models, also requires (NP1) electronic shift transfer case.	--	--	A[1]	■
AG1		**Seat adjuster**, driver 6-way power 1 - Included with (**2) Seat trim, Leather seating surfaces on Extended Cab Models. - Included with (A95) front reclining bucket seats when (YF2) Ambulance Package is ordered or with a Fleet or Government Order.	--	--	A[1]	■
UK3		**Steering wheel controls**, mounted audio and Driver Information Center controls which provides access to enhanced Driver Information Center features and information	--	--	A	■

ADDITIONAL OPTIONS						
Free Flow RPO Code	Ref. Only RPO Code	Description 1 - Equipment group 1WT, 1LS, and 1LT available on C*36003, C*36403 and C*36053 Models. 2 - Equipment group 2LT available on C*36053 Models.	Reg. and Ext. Cab			Ext. Cab
			Work Truck 1WT[1]	LS 1LS[1]	LT1 1LT[1]	LT2 2LT[1]
U2K		**XM Satellite Radio.** With a wide variety of programming, XM has something to excite any driver. Whether you want to be entertained or informed, to laugh, think, or sing, XM has the perfect channel for you - coast-to-coast, and in digital-quality sound. 3 trial months - no obligation 1 - Available in the 48 contiguous United States. Required $12.95 monthly subscription sold separately. All fees and programming subject to change. Subscription subject to customer agreement. For more information, visit gm.xmradio.com.	--	--	A[1]	A[1]
YF2		**Ambulance Package** 1 - 2007 Silverado 3500 Chassis Cab (YF2) Ambulance Package is available with CC36403 models and requires (C7W) 11,400 lbs. (5171 kg) GVWR or with CK36403 models and requires (C7L) 12,000 lbs. (5443 kg) GVWR. Most ambulance bodies require (GTY) wide-track rear axle with (C7W) 11,400 lbs. (5171 kg) GVWR. Contact the CSV Express line at 1-800-759-5550 for SEO trim availability. Center console is not included with LT1.	--	A[1]	A[1]	--
T96		**Fog lamps**, front, halogen 1 - Requires (V76) front frame-mounted recovery hooks. Not available with 4x4 models or (YF2) Ambulance Package. 2 - Not available with 4x4 models.	--	--	A[1]	■[2]
AJ1		**Glass**, Solar-Ray deep-tinted (all windows except light-tinted glass on windshield and driver- and front passenger-side glass)	A	A	■	■
DF2		**Mirrors**, outside high-visibility camper-style, Black, manual-folding and extension, includes a dual-segment mirror on the driver-side that provides enhanced wide angle capacity (not recommended for bodies or trailers wider than 86" [218.4 cm])	A	A	--	--
DG5		**Mirrors**, outside West Coast-type, right-hand and left-hand, Black (7" wide x 16" high) (shipped loose for dealer installation)	A	A	--	--
DPN		**Mirrors**, outside heated power-adjustable vertical camper manual-folding and extension, integrated turn signal indicators and lower convex spotter glass (convex glass is not heated)	--	--	A	A
XYK		**Tires**, LT215/85R16D all-season, blackwall 1 - Requires and standard on CC36003, CC36053, CC36403 or CK36003 models. Not available with (VYU) Snow Plow Prep Package on CK36003 model. Includes 6 tires.	A[1]	A[1]	A[1]	A[1]
XEC		**Tires**, LT215/85R16E all-season, blackwall 1 - Requires and standard on CK36003 and (VYU) Snow Plow Prep Package, CK36053 or CK36403 models. Includes 6 tires.	A[1]	A[1]	A[1]	A[1]
XEF		**Tires**, LT215/85R16E on-/off-road, blackwall 1 - Includes 6 tires.	A[1]	A[1]	A[1]	A[1]

ADDITIONAL OPTIONS						
Free Flow RPO Code	Ref. Only RPO Code	Description 1 - Equipment group 1WT, 1LS, and 1LT available on C*36003, C*36403 and C*36053 Models. 2 - Equipment group 2LT available on C*36053 Models.	Reg. and Ext. Cab			Ext. Cab
			Work Truck 1WT[1]	LS 1LS[1]	LT1 1LT[1]	LT2 2LT[1]
ZYK		**Tire**, spare LT215/85R16D all-season, blackwall, located at rear underbody of vehicle 1 - Requires CC36003, CC36053, CC36403 or CK36003 models and (XYK) LT215/85R16D all-season blackwall tires. Not available with (VYU) Snow Plow Prep Package on CK36003 models.	A[1]	A[1]	A[1]	A[1]
ZEC		**Tire**, spare LT215/85R16E all-season, blackwall, located at rear underbody of vehicle 1 - Requires CK36003 and (VYU) Snow Plow Prep Package, CK36053 or CK36403 models and (XEC) LT215/85R16E all-season blackwall tires.	A[1]	A[1]	A[1]	A[1]
ZEF		**Tire**, spare LT215/85R16E all-season, blackwall, located at rear underbody of vehicle 1 - Requires (XEF) LT215/85R16E on-/off-road blackwall tires.	A[1]	A[1]	A[1]	A[1]
K47		**Air cleaner**, high-capacity 1 - Included with (LBZ) Duramax 6.6L Turbo Diesel V8 engine or (VYU) Snow Plow Prep Package.	A[1]	A[1]	A[1]	A[1]
KL5		**Alternative fuel conversions**, conversion-ready engine, includes internal modifications for operation with natural or propane gas 1 - Requires (LQ4) Vortec 6.0L V8 SFI engine and (MT1) heavy-duty 4-speed automatic transmission.	A[1]	A[1]	A[1]	A[1]
TP2		**Battery**, auxiliary heavy-duty 600 cold-cranking amps, maintenance-free 1 - Not available with (LBZ) Duramax 6.6L Turbo Diesel V8 engine.	A[1]	A[1]	A[1]	A[1]
G80		**Differential**, heavy-duty automatic locking rear	A	A	A	A
FE9		**Emissions**, Federal requirements	A	A	A	A
YF5		**Emissions**, California state requirements	A	A	A	A
NE1		**Emissions**, Maine, Massachusetts, New York or Vermont state requirements	A	A	A	A
NB8		**Emissions override**, California, Massachusetts or New York (for vehicles ordered by dealers in states of California, Massachusetts or New York with Federal emissions) 1 - Requires (FE9) Federal emissions requirements.	A[1]	A[1]	A[1]	A[1]

ADDITIONAL OPTIONS

Free Flow RPO Code	Ref. Only RPO Code	Description 1 - Equipment group 1WT, 1LS, and 1LT available on C*36003, C*36403 and C*36053 Models. 2 - Equipment group 2LT available on C*36053 Models.	Reg. and Ext. Cab			Ext. Cab
			Work Truck 1WT[1]	LS 1LS[1]	LT1 1LT[1]	LT2 2LT[2]
NC7		**Emissions override**, Federal (for vehicles ordered by dealers in Federal emission states with California, New York, Vermont, Massachusetts or Maine emissions; may also be used by dealers in states of California, New York, Vermont, Massachusetts or Maine to order different state-specific emissions) 1 - Requires (YF5) California state emissions requirements or (NE1) New York, Vermont, Massachusetts or Maine state emissions requirements.	A[1]	A[1]	A[1]	A[1]
K05		**Engine block heater** 1 - Included with (LBZ) Duramax 6.6L Turbo Diesel V8 engine.	A[1]	A[1]	A[1]	A[1]
L18		**Engine**, Vortec 8.1L V8 SFI (330 hp [245.8 kW] @ 4200 rpm, 450 lb-ft of torque [607.5 N-m] @ 3200 rpm) 1 - Not available with (YF2) Ambulance Package.	A	A[1]	A[1]	A
LBZ		**Engine**, Duramax 6.6L Turbo Diesel V8 (360 hp [268.0 kW] @ 3200 rpm, 650 lb-ft of torque [881.0 N-m] @ 1600 rpm) 1 - Requires (MW7) Allison 1000 6-speed automatic transmission. Includes (TQ3) heavy-duty, dual 770 cold-cranking amp batteries, (KG3) 145-amp alternator, (K47) high-capacity air cleaner and (K05) engine block heater. 2 - Requires (MW7) Allison 1000 6-speed automatic transmission. Includes (TQ3) heavy-duty, dual 770 cold-cranking amp batteries, (KG3) 145-amp alternator, (K47) high-capacity air cleaner and (K05) engine block heater. Required with (YF2) Ambulance Package.	A[1]	A[2]	A[2]	A[1]
V10		**Covers**, radiator grille and front bumper openings for diesel engines in winter weather 1 - Requires (LBZ) Duramax 6.6L Turbo Diesel V8 engine and is required on orders with "Ship To" locations within the following states: Maine, New Hampshire, Vermont, Minnesota, North Dakota, South Dakota, Montana, Alaska, Idaho, Wisconsin, Wyoming, Michigan, Colorado and New York.	A[1]	A[1]	A[1]	A[1]
NQZ		**Fuel tank delete**, rear (deletes 23 gallon [87.1L] rear fuel tank, leaves 27 gallon [102.2L] front fuel tank) 1 - Not available with (YF2) Ambulance Package.	A	A[1]	A[1]	A
PDN		**Heavy-Duty Power Package**, includes (LBZ) Duramax 6.6L Turbo Diesel engine, (MW7) Allison 1000 6-speed automatic transmission and (G80) heavy-duty rear locking differential	A	A	A	A
R6Y		**Heavy-Duty Power Package discount not desired**	A	A	A	A
GT4		**Rear axle**, 3.73 ratio 1 - Refer to Engine/Axle chart for availability.	A[1]	A[1]	A[1]	A[1]
GTY		**Rear axle**, wide-track 1 - Increases axle 8" (20.3 cm) to 74" (188.0 cm) wide.	A[1]	A[1]	A[1]	A[1]

ADDITIONAL OPTIONS

Free Flow RPO Code	Ref. Only RPO Code	Description 1 - Equipment group 1WT, 1LS, and 1LT available on C*36003, C*36403 and C*36053 Models. 2 - Equipment group 2LT available on C*36053 Models.	Reg. and Ext. Cab			Ext. Cab
			Work Truck 1WT[1]	LS 1LS[1]	LT1 1LT[1]	LT2 2LT[2]
NZZ		**Skid Plate Package**, includes aluminum front underbody shield starting behind front bumper and running to first cross-member, protecting front underbody, oil pan, differential case and transfer case, frame-mounted shields 1 - Requires 4x4 models. Included with (VYU) Snow Plow Prep Package. 2 - Requires 4x4 models. Included with (VYU) Snow Plow Prep Package. Not available with (YF2) Ambulance Package.	A[1]	A[2]	A[2]	A[1]
VYU		**Snow Plow Prep Package**, includes 10-amp power for backup and roof emergency light, (KG3) 145-amp alternator, high-flow front bumper, forward lamp wiring harness, 1.65" (42 mm) access hole with grommet in front of dash panel, roof beacon lamp provisions with switch on the instrument panel, instrument panel jumper wiring harness for electric trailer brake controller, (K47) high-capacity air cleaner and (NZZ) Skid Plate Package 1 - Requires 4x4 models. With CK36003 requires (XEC) LT215/85R16E all-season blackwall tires or (XEF) LT215/85R16E on-/off-road blackwall tires. With CK36053 or CK36403 models, requires (LQ4) Vortec 6.0L V8 SFI engine or (L18) Vortec 8.1L V8 SFI engine. Not available with (CJ2) dual-zone automatic air conditioning or (YF2) Ambulance Package.	A[1]	A[1]	A[1]	A[1]
NP1		**Transfer case**, electronic shift with push-button controls 1 - Requires 4x4 models. Requires (MT1) heavy-duty 4-speed automatic transmission or (MW7) Allison 1000 6-speed automatic transmission. 2 - Requires 4x4 models.	--	--	A[1]	■[2]
MT1		**Transmission**, 4-speed automatic, heavy-duty, electronically controlled with overdrive and tow/haul mode. Includes (KNP) external transmission oil cooler 1 - Requires (LQ4) Vortec 6.0L V8 SFI engine.	A[1]	A[1]	A[1]	S[1]

2007 Chevrolet Truck Silverado 3500 EQUIPMENT GROUPS
CC Classic

ADDITIONAL OPTIONS						
Free Flow RPO Code	Ref. Only RPO Code	Description 1 - Equipment group 1WT, 1LS, and 1LT available on C*36003, C*36403 and C*36053 Models. 2 - Equipment group 2LT available on C*36053 Models.	Reg. and Ext. Cab			Ext. Cab
			Work Truck 1WT[1]	LS 1LS[1]	LT1 1LT[1]	LT2 2LT[2]
MW7		**Transmission**, Allison 1000 6-speed automatic, electronically controlled with overdrive, electronic engine grade braking and tow/haul mode. Includes (KNP) external transmission oil cooler. Also, includes provisions to assist with an "aftermarket" PTO installation. These provisions allow your Dealership to install an interface harness and PTO Switch that mounts on the IP. This switch and interface harness is only available via GMSPO and is not installed at assembly. Once installed by your Dealership, it will enable your PTO controls to interface with vehicle electronic systems. (NOTE: PTO content not included if (YF2) Ambulance Package is ordered) 1 - Requires (L18) Vortec 8.1L V8 SFI engine or (LBZ) Duramax 6.6L Turbo Diesel V8 engine. 2 - Requires (L18) Vortec 8.1L V8 SFI engine or (LBZ) Duramax 6.6L Turbo Diesel V8 engine. Required with (YF2) Ambulance Package. PTO content not included if (YF2) Ambulance Package is ordered.	A[1]	A[2]	A[2]	A[1]

2007 Chevrolet Truck Silverado 3500 PEG STAIRSTEP
CC Classic

S = Standard Equipment A = Available – (dashes) = Not Available D = ADI Available
■ = Included in Equipment Group □ = Included in Equipment Group but upgradeable

No deletions allowed to Equipment Groups. Additional options may be added; check ordering information section for compatibility.

*Indicates availability of feature on multiple models. For example, it indicates feature availability on 2WD and 4WD Models or Rear wheel drive and All-wheel drive Models.

Codes listed in the shaded column titled Ref. Only RPO Code are for internal use only and should not be ordered.

Free Flow RPO Code	Ref. Only RPO Code	Description 1 - Equipment group 1WT, 1LS, and 1LT available on C*36003, C*36403 and C*36053 Models. 2 - Equipment group 2LT available on C*36053 Models.	Reg. and Ext. Cab			Ext. Cab
			Work Truck 1WT[1]	LS 1LS[1]	LT1 1LT[1]	LT2 2LT[2]
UB0		**Audio system**, AM/FM stereo with CD player 1 - Upgradeable to (UC6) AM/FM stereo with 6-disc in-dash CD changer.		■	□[1]	□[1]
K34		**Cruise control**		■	■	■
C49		**Defogger**, rear-window		■	■	■
	P06	**Wheels**, 6 - 16" x 6.5" (40.6 cm x 16.5 cm) 8-lug steel		■	■	■
	AE7	**Seats**, front 40/20/40 split-bench		■	■	
	DK7	**Console**, overhead mini			■	■
AU3		**Door locks**, power			■	■
B30		**Floor covering**, color-keyed carpeting 1 - May be substituted with (BG9) rubberized vinyl floor covering. Not available with (**V) vinyl seat trim.			□[1]	■
AJ1		**Glass**, Solar-Ray deep-tinted			■	■
	DF5	**Mirror**, inside rearview auto-dimming			■	■
	DL8	**Mirrors**, outside heated power-adjustable, Black 1 - Upgradeable to (DPN) outside vertical camper mirrors.			□[1]	□[1]
	AU0	**Remote Keyless Entry**			■	■
	NP5	**Steering wheel**, leather-wrapped, Black			■	■
	A31	**Windows**, power			■	■
	UQ3	**Audio system feature**, speaker system			■	
CJ2		**Air conditioning**, dual-zone automatic climate control 1 - Must be substituted with (CJ3) dual-zone manual air conditioning when (VYU) Snow Plow Prep Package is ordered.				□[1]
	UQ7	**Audio system feature**, Bose premium speaker system				■
	D07	**Console**, floor				■
T96		**Fog lamps**, front				■
AG1		**Seat adjuster**, driver 6-way power				■
A95		**Seats**, front bucket				■
UK3		**Steering wheel controls**, mounted audio and Driver Information Center controls				■
NP1		**Transfer case**, electronic shift				■

S = Standard Equipment A = Available – (dashes) = Not Available D = ADI Available
■ = Included in Equipment Group □ = Included in Equipment Group but upgradeable

*Indicates availability of feature on multiple models. For example, it indicates feature availability on 2WD and 4WD Models or Rear wheel drive and All-wheel drive Models.

Codes listed in the shaded column titled Ref. Only RPO Code are for internal use only and should not be ordered.

Free Flow RPO Code	Ref. Only RPO Code	Description 1 - Equipment group 1WT, 1LS, and 1LT available on C*36003, C*36403 and C*36053 Models. 2 - Equipment group 2LT available on C*36053 Models.	Reg. and Ext. Cab Work Truck 1WT[1]	 LS 1LS[1]	 LT1 1LT[1]	Ext. Cab LT2 2LT[2]
		Air bags, frontal, driver and right-front passenger with passenger-side deactivation switch 1 - Never place a rear-facing infant restraint in the front seat of any vehicle equipped with an active frontal air bag. Always use safety belts and the correct child restraints for your child's age and size. Children are safer when properly secured in a rear seat. See the vehicle's Owner's Manual and child safety seat instructions for more safety information.	S[1]	S[1]	S[1]	S[1]
CJ3		**Air conditioning**, dual-zone manual climate control with individual climate settings for driver and right-front passenger 1 - Required and only available when (VYU) Snow Plow Prep Package is selected.	S	S	S	A[1]
C42		**Air conditioning delete**, provides heater only 1 - Requires Regular Cab models.	A[1]	--	--	--
CJ2		**Air conditioning**, dual-zone automatic climate control with individual climate settings for driver and right-front passenger 1 - Requires Extended Cab models. Not available with (VYU) Snow Plow Prep Package. 2 - Must be substituted with (CJ3) dual-zone manual air conditioning when (VYU) Snow Plow Prep Package is ordered.	--	--	A[1]	□[2]
		Assist handle, front passenger 1 - Also includes rear outboard passenger assist handle on Extended Cab models.	S[1]	S[1]	S[1]	S[1]
	UM7	**Audio system**, AM/FM stereo with seek-and-scan and digital clock	S	--	--	--
UB0		**Audio system**, AM/FM stereo with CD player, seek-and-scan, digital clock, auto-tone control, Radio Data System (RDS) and speed-compensated volume 1 - Upgradeable to (UC6) AM/FM stereo with 6-disc in-dash CD changer.	A	■	□[1]	□[1]
UC6		**Audio system**, AM/FM stereo with 6-disc CD changer, seek-and-scan, digital clock, auto-tone control, Radio Data System (RDS), speed-compensated volume and TheftLock	--	--	A	A
	UQ5	**Audio system feature**, 4-speaker system	S	S	--	--
	UQ3	**Audio system feature**, speaker system 1 - Includes 4 speakers on Regular Cab and 6 speakers on Extended Cab Models.	--	--	■[1]	--

Free Flow RPO Code	Ref. Only RPO Code	Description 1 - Equipment group 1WT, 1LS, and 1LT available on C*36003, C*36403 and C*36053 Models. 2 - Equipment group 2LT available on C*36053 Models.	Reg. and Ext. Cab Work Truck 1WT[1]	 LS 1LS[1]	 LT1 1LT[1]	Ext. Cab LT2 2LT[2]
	UQ7	**Audio system feature**, Bose premium speaker system with sub-woofer in center console 1 - Included and only available with (A95) front reclining bucket seats.	--	--	A[1]	■
		Cigarette lighter, on instrument panel	S	S	S	S
		Coat hook, driver-side rear 1 - Also includes passenger-side coat hook on Extended Cab models.	S[1]	S[1]	S[1]	S[1]
	D07	**Console**, floor with storage compartment and dual cup holders 1 - Included and only available with (A95) front reclining bucket seats.	--	--	A[1]	■
	DK7	**Console**, overhead mini with map lights	--	--	■	■
K34		**Cruise control**, electronic with set and resume speed	A	■	■	■
		Cup holders, front 1 - Also includes rear cupholders on Extended Cab models.	S[1]	S[1]	S[1]	S[1]
C49		**Defogger**, rear-window electric 1 - Not available with (C42) air conditioning delete. Available with Fleet and Government order types only.	A[1]	■	■	■
AU3		**Door locks**, power 1 - Available with Fleet and Government order types only.	A[1]	A	■	■
		Driver Information Center that monitors numerous different systems depending on vehicle equipment	S	S	S	S
BG9		**Floor covering**, Black rubberized-vinyl 1 - Not available with (922) Medium Gray leather seating surfaces.	S	S	A[1]	--
B30		**Floor covering**, color-keyed carpeting 1 - Available with Fleet and Government order types only. Not available with (**V) vinyl seat trim. 2 - Not available with (**V) vinyl interior trim. 3 - May be substituted with (BG9) rubberized vinyl floor covering. Not available with (**V) vinyl seat trim.	A[1]	A[2]	□[3]	■
		Instrumentation, analog with speedometer, odometer with trip odometer, fuel level, voltmeter, engine temperature, oil pressure and tachometer	S	S	S	S
		Lighting, interior with dome and reading lights, backlit instrument panel switches and door handle-activated illuminated entry	S	S	S	S
		Mirror, inside rearview manual day/night	S	S	--	--
	DF5	**Mirror**, inside rearview auto-dimming with 8-point compass and outside temperature display	--	--	■	■

Free Flow RPO Code	Ref. Only RPO Code	Description 1 - Equipment group 1WT, 1LS, and 1LT available on C*36003, C*36403 and C*36053 Models. 2 - Equipment group 2LT available on C*36053 Models.	Reg. and Ext. Cab			Ext. Cab
			Work Truck 1WT[1]	LS 1LS[1]	LT1 1LT[1]	LT2 2LT[2]
UE1		**OnStar**, 1-year of Safe and Sound plan. Includes Automatic Notification of Air Bag Deployment, Stolen Vehicle Location Assistance, Emergency Services, Roadside Assistance, Remote Door Unlock, OnStar Vehicle Diagnostics, Hands-Free Calling, AccidentAssist and Remote Horn & Lights 1 - OnStar services require vehicle electrical system (including battery), wireless service and GPS satellite signals to be available and operating for features to function properly. OnStar acts as a link to existing emergency service providers. OnStar Vehicle Diagnostics available on most 2004 MY and newer GM vehicles. Diagnostic capability varies by model. Visit onstar.com for system limitations and details. Requires (UK3) steering-wheel mounted audio controls. Not available with a ship-to of Puerto Rico or the Virgin Islands.	--	--	A[1]	A[1]
PDB		**OnStar Plus Package**, includes (U2K) XM Satellite Radio, (UE1) OnStar and (UK3) steering-wheel mounted audio controls 1 - Package does not include (U2K) XM Satellite Radio when ordered outside the 48 contiguous United States. Not available with a ship-to of Puerto Rico or the Virgin Islands.	--	--	A[1]	A[1]
R6Q		**OnStar Plus Package discount not desired** 1 - Required when content within option package is ordered and entire package is not desired.	--	--	A[1]	A[1]
		Power outlets, 2 auxiliary instrument panel-mounted with covers, 12-volt	S	S	S	S
	AU0	**Remote Keyless Entry**, with 2 transmitters, panic button and content theft alarm	--	--	■	■
	**V	**Seat trim**, vinyl	S	A	--	--
	**C	**Seat trim**, cloth	A	A	--	--
	**D	**Seat trim**, Custom Cloth	A	S	S	S
	**2	**Seat trim**, leather 1 - Not available with Regular Cab models. Extended Cab includes front leather seating surfaces with rear vinyl bench.	--	--	A[1]	A[1]
	AE7	**Seats**, front 40/20/40 split-bench, 3-passenger, driver and front passenger manual reclining with outboard head restraints 1 - Not available with (YF2) Ambulance Package.	S	A[1]	--	--
	AE7	**Seats**, front 40/20/40 split-bench, 3-passenger, driver and front passenger manual reclining, center fold-down armrest with storage, adjustable outboard head restraints and storage pockets on Extended Cab models 1 - Requires (**D) Custom Cloth seat trim. 2 - Not available with (YF2) Ambulance Package.	A[1]	■[1]	■[2]	--
	9S1	**Seats**, front bucket with head restraints 1 - Included and only available with (YF2) Ambulance Package.	--	A[1]	--	--

Free Flow RPO Code	Ref. Only RPO Code	Description 1 - Equipment group 1WT, 1LS, and 1LT available on C*36003, C*36403 and C*36053 Models. 2 - Equipment group 2LT available on C*36053 Models.	Reg. and Ext. Cab			Ext. Cab
			Work Truck 1WT[1]	LS 1LS[1]	LT1 1LT[1]	LT2 2LT[2]
A95		**Seats**, front bucket, includes (AG1) 6-way power driver seat adjuster, front passenger manual recline, adjustable outboard head restraints, inboard armrests and storage pockets 1 - Required with (YF2) Ambulance Package. Available to order with Fleet and Government Order Types only on Extended Cab Models. Includes (D07) floor console and (UQ7) Bose Premium speaker system. On 4WD Models, also requires (NP1) electronic shift transfer case.	--	--	A[1]	■
		Seat, rear folding bench, 3-passenger (includes child seat top tether anchor) 1 - Standard on Extended Cab models only.	S[1]	S[1]	S[1]	S
AG1		**Seat adjuster**, driver 6-way power 1 - Included with (**2) Seat trim, Leather seating surfaces on Extended Cab Models. - Included with (A95) front reclining bucket seats when (YF2) Ambulance Package is ordered or with a Fleet or Government Order.	--	--	A[1]	■
		Steering column, Tilt-Wheel, adjustable with brake/transmission shift interlock	S	S	S	S
		Steering wheel, includes theft-deterrent locking feature	S	S	--	--
	NP5	**Steering wheel**, leather-wrapped, Black with theft-deterrent locking feature	--	--	■	■
UK3		**Steering wheel controls**, mounted audio and Driver Information Center controls which provides access to enhanced Driver Information Center features and information	--	--	A	■
		Theft-deterrent system, PASSlock II	S	S	S	S
		Tools, mechanical jack and wheel wrench located in back of cab	S	S	S	S
		Visors, driver and front passenger, padded with cloth trim, extenders, pocket on driver-side and vanity mirror on passenger-side, Shale-colored	S	S	S	S
		Warning tones, headlamp on, key-in-ignition, driver and passenger buckle up reminder and turn signal on	S	S	S	S
	A31	**Windows**, power with driver and front passenger Express-Down	--	--	■	■
		Windows, swing-out rear quarter 1 - Standard on Extended Cab models only.	S[1]	S[1]	S[1]	S

2007 Chevrolet Truck Silverado 3500 INTERIOR
CC Classic

Free Flow RPO Code	Ref. Only RPO Code	Description 1 - Equipment group 1WT, 1LS, and 1LT available on C*36003, C*36403 and C*36053 Models. 2 - Equipment group 2LT available on C*36053 Models.	Reg. and Ext. Cab			Ext. Cab
			Work Truck 1WT[1]	LS 1LS[1]	LT1 1LT[1]	LT2 2LT[2]
U2K		**XM Satellite Radio.** With a wide variety of programming, XM has something to excite any driver. Whether you want to be entertained or informed, to laugh, think, or sing, XM has the perfect channel for you - coast-to-coast, and in digital-quality sound. 3 trial months - no obligation **1 - Available in the 48 contiguous United States. Required $12.95 monthly subscription sold separately. All fees and programming subject to change. Subscription subject to customer agreement. For more information, visit gm.xmradio.com.**	--	--	A[1]	A[1]

2007 Chevrolet Truck Silverado 3500 EXTERIOR
CC Classic

S = Standard Equipment A = Available -- (dashes) = Not Available D = ADI Available
■ = Included in Equipment Group □ = Included in Equipment Group but upgradeable

*Indicates availability of feature on multiple models. For example, it indicates feature availability on 2WD and 4WD Models or Rear wheel drive and All-wheel drive Models.

Codes listed in the shaded column titled Ref.-Only RPO Code are for internal use only and should not be ordered.

Free Flow RPO Code	Ref. Only RPO Code	Description 1 - Equipment group 1WT, 1LS, and 1LT available on C*36003, C*36403 and C*36053 Models. 2 - Equipment group 2LT available on C*36053 Models.	Reg. and Ext. Cab			Ext. Cab
			Work Truck 1WT[1]	LS 1LS[1]	LT1 1LT[1]	LT2 2LT[2]
YF2		**Ambulance Package** **1 - 2007 Silverado 3500 Chassis Cab (YF2) Ambulance Package is available with CC36403 models and requires (C7W) 11,400 lbs. (5171 kg) GVWR or with CK36403 models and requires (C7L) 12,000 lbs. (5443 kg) GVWR. Most ambulance bodies require (GTY) wide-track rear axle with (C7W) 11,400 lbs. (5171 kg) GVWR. Contact the CSV Express line at 1-800-759-5550 for SEO trim availability. Center console is not included with LT1.**	--	A[1]	A[1]	--
		Air dam, Gray	S	S	S	S
	ZW9	**Body**, Chassis Cab	S	S	S	S
	VG3	**Bumper**, front chrome with Gray lower	S	S	S	S
		Daytime Running Lamps, with automatic exterior lamp control	S	S	S	S
T96		**Fog lamps**, front, halogen **1 - Requires (V76) front frame-mounted recovery hooks. Not available with 4x4 models or (YF2) Ambulance Package.** **2 - Not available with 4x4 models.**	--	--	A[1]	■[2]
		Glass, Solar-Ray light-tinted, all windows	S	S	--	--
AJ1		**Glass**, Solar-Ray deep-tinted (all windows except light-tinted glass on windshield and driver- and front passenger-side glass)	A	A	■	■
	TR3	**Grille**, color-keyed surround with chrome accent bar	S	S	S	S
		Headlamps, dual halogen composite with automatic exterior lamp control and flash-to-pass feature	S	S	S	S
	U01	**Lamps**, Amber roof marker	S	S	S	S
	TS9	**Lamp delete**, LED center high-mounted stop/brake (CHMSL) delete and cargo area, delete **1 - Standard with 4x4 models only.** **2 - Standard with 4x4 models only. Included and only available with (YF2) Ambulance Package.**	S[1]	A[2]	A[2]	S[1]
	D44	**Mirrors**, outside manual, Black, manual-folding	S	S	--	--
DF2		**Mirrors**, outside high-visibility camper-style, Black, manual-folding and extension, includes a dual-segment mirror on the driver-side that provides enhanced wide angle capacity (not recommended for bodies or trailers wider than 86" [218.4 cm])	A	A	--	--

2007 Chevrolet Truck Silverado 3500 EXTERIOR
CC Classic

Free Flow RPO Code	Ref. Only RPO Code	Description 1 - Equipment group 1WT, 1LS, and 1LT available on C*36003, C*36403 and C*36053 Models. 2 - Equipment group 2LT available on C*36053 Models.	Reg. and Ext. Cab			Ext. Cab
			Work Truck 1WT[1]	LS 1LS[1]	LT1 1LT[1]	LT2 2LT[2]
DG5		Mirrors, outside West Coast-type, right-hand and left-hand, Black (7" wide x 16" high) (shipped loose for dealer installation)	A	A	--	--
	DL8	Mirrors, outside heated power-adjustable, Black, manual-folding 1 - Upgradeable to (DPN) outside vertical camper mirrors.	--	--	□[1]	□[1]
DPN		Mirrors, outside heated power-adjustable vertical camper manual-folding and extension, integrated turn signal indicators and lower convex spotter glass (convex glass is not heated)	--	--	A	A
	ZY1	Paint, solid	S	S	S	S
	V76	Recovery hooks, front, frame-mounted	S	S	S	S
XYK		Tires, LT215/85R16D all-season, blackwall 1 - Requires and standard on CC36003, CC36053, CC36403 or CK36003 models. Not available with (VYU) Snow Plow Prep Package on CK36003 model. Includes 6 tires.	A[1]	A[1]	A[1]	A[1]
XEC		Tires, LT215/85R16E all-season, blackwall 1 - Requires and standard on CK36003 and (VYU) Snow Plow Prep Package, CK36053 or CK36403 models. Includes 6 tires.	A[1]	A[1]	A[1]	A[1]
XEF		Tires, LT215/85R16E on-/off-road, blackwall 1 - Includes 6 tires.	A[1]	A[1]	A[1]	A[1]
ZYK		Tire, spare LT215/85R16D all-season, blackwall, located at rear underbody of vehicle 1 - Requires CC36003, CC36053, CC36403 or CK36003 models and (XYK) LT215/85R16D all-season blackwall tires. Not available with (VYU) Snow Plow Prep Package on CK36003 models.	A[1]	A[1]	A[1]	A[1]
ZEC		Tire, spare LT215/85R16E all-season, blackwall, located at rear underbody of vehicle 1 - Requires CK36003 and (VYU) Snow Plow Prep Package, CK36053 or CK36403 models and (XEC) LT215/85R16E all-season blackwall tires.	A[1]	A[1]	A[1]	A[1]
ZEF		Tire, spare LT215/85R16E all-season, blackwall, located at rear underbody of vehicle 1 - Requires (XEF) LT215/85R16E on-/off-road blackwall tires.	A[1]	A[1]	A[1]	A[1]
		Wheels, 6 - 16" x 6.5" (40.6 cm x 16.5 cm) 8-lug painted steel (dual rear), includes painted center caps and steel spare	S	--	--	--
	P06	Wheels, 6 - 16" x 6.5" (40.6 cm x 16.5 cm) 8-lug steel, with bright metal rings, chrome center caps and steel spare	--	■	■	■
	B71	Wheel flares, front only	S	S	S	S
		Wipers, front intermittent wet-arm with pulse washers	S	S	S	S

2007 Chevrolet Truck Silverado 3500 MECHANICAL
CC Classic

S = Standard Equipment A = Available -- (dashes) = Not Available D = ADI Available
■ = Included in Equipment Group □ = Included in Equipment Group but upgradeable

*Indicates availability of feature on multiple models. For example, it indicates feature availability on 2WD and 4WD Models or Rear wheel drive and All-wheel drive Models.

Codes listed in the shaded column titled Ref. Only RPO Code are for internal use only and should not be ordered.

Free Flow RPO Code	Ref. Only RPO Code	Description 1 - Equipment group 1WT, 1LS, and 1LT available on C*36003, C*36403 and C*36053 Models. 2 - Equipment group 2LT available on C*36053 Models.	Reg. and Ext. Cab			Ext. Cab
			Work Truck 1WT[1]	LS 1LS[1]	LT1 1LT[1]	LT2 2LT[2]
K47		**Air cleaner**, high-capacity 1 - Included with (LBZ) Duramax 6.6L Turbo Diesel V8 engine or (VYU) Snow Plow Prep Package.	A[1]	A[1]	A[1]	A[1]
KL5		**Alternative fuel conversions**, conversion-ready engine, includes internal modifications for operation with natural or propane gas 1 - Requires (LQ4) Vortec 6.0L V8 SFI engine and (MT1) heavy-duty 4-speed automatic transmission.	A[1]	A[1]	A[1]	A[1]
	K68	**Alternator**, 105 amps 1 - Not available with (VYU) Snow Plow Prep Package. 2 - Not available with (VYU) Snow Plow Prep Package or (YF2) Ambulance Package.	S[1]	S[2]	S[2]	S[1]
	KG3	**Alternator**, 145 amps 1 - Included and only available with (VYU) Snow Plow Prep Package or (LBZ) Duramax 6.6L Turbo Diesel V8 engine, unless (YF2) Ambulance Package is ordered.	A[1]	A[1]	A[1]	A[1]
	K65	**Alternator**, dual, 105 amps each 1 - Included and only available with (YF2) Ambulance Package.	--	A[1]	A[1]	--
		Battery, heavy-duty 600 cold-cranking amps, maintenance-free with rundown protection and retained accessory power 1 - Not standard with (LBZ) Duramax 6.6L Turbo Diesel V8 engine.	S[1]	S[1]	S[1]	S[1]
TP2		**Battery**, auxiliary heavy-duty 600 cold-cranking amps, maintenance-free 1 - Not available with (LBZ) Duramax 6.6L Turbo Diesel V8 engine.	A[1]	A[1]	A[1]	A[1]
	TQ3	**Battery**, heavy-duty dual 770 cold-cranking amps, maintenance-free with rundown protection and retained accessory power 1 - Included and only available with (LBZ) Duramax 6.6L Turbo Diesel V8 engine.	A[1]	A[1]	A[1]	A[1]
		Brakes, 4-wheel antilock, 4-wheel disc	S	S	S	S
	KC4	**Cooling**, external engine oil cooler, heavy-duty air-to-oil, integral to driver-side of radiator tank	S	S	S	S
	KNP	**Cooling**, auxiliary external transmission oil cooler, heavy-duty air-to-oil 1 - Included and only available with (MT1) heavy-duty 4-speed automatic transmission or (MW7) Allison 1000 6-speed automatic transmission.	A[1]	A[1]	A[1]	A[1]

Free Flow RPO Code	Ref. Only RPO Code	Description 1 - Equipment group 1WT, 1LS, and 1LT available on C*36003, C*36403 and C*36053 Models. 2 - Equipment group 2LT available on C*36053 Models.	Reg. and Ext. Cab			Ext. Cab
			Work Truck 1WT[1]	LS 1LS[1]	LT1 1LT[1]	LT2 2LT[2]
		Cooling, internal transmission oil cooler, water-to-oil, integral to driver-side of radiator tank 1 - Included and only available with (MT1) heavy-duty 4-speed automatic transmission or (MW7) Allison 1000 6-speed automatic transmission.	A[1]	A[1]	A[1]	A[1]
G80		**Differential**, heavy-duty automatic locking rear	A	A	A	A
FE9		**Emissions**, Federal requirements	A	A	A	A
YF5		**Emissions**, California state requirements	A	A	A	A
NE1		**Emissions**, Maine, Massachusetts, New York or Vermont state requirements	A	A	A	A
NB8		**Emissions override**, California, Massachusetts or New York (for vehicles ordered by dealers in states of California, Massachusetts or New York with Federal emissions) 1 - Requires (FE9) Federal emissions requirements.	A[1]	A[1]	A[1]	A[1]
NC7		**Emissions override**, Federal (for vehicles ordered by dealers in Federal emission states with California, New York, Vermont, Massachusetts or Maine emissions; may also be used by dealers in states of California, New York, Vermont, Massachusetts or Maine to order different state-specific emissions) 1 - Requires (YF5) California state emissions requirements or (NE1) New York, Vermont, Massachusetts or Maine state emissions requirements.	A[1]	A[1]	A[1]	A[1]
K05		**Engine block heater** 1 - Included with (LBZ) Duramax 6.6L Turbo Diesel V8 engine.	A[1]	A[1]	A[1]	A[1]
	LQ4	**Engine**, Vortec 6.0L V8 SFI (300 hp [223.8 kW] @ 4400 rpm, 360 lb-ft of torque [486.6 N-m] @ 4000 rpm) 1 - Not available with (YF2) Ambulance Package.	S	S[1]	S[1]	S
L18		**Engine**, Vortec 8.1L V8 SFI (330 hp [245.8 kW] @ 4200 rpm, 450 lb-ft of torque [607.5 N-m] @ 3200 rpm) 1 - Not available with (YF2) Ambulance Package.	A	A[1]	A[1]	A
LBZ		**Engine**, Duramax 6.6L Turbo Diesel V8 (360 hp [268.0 kW] @ 3200 rpm, 650 lb-ft of torque [881.0 N-m] @ 1600 rpm) 1 - Requires (MW7) Allison 1000 6-speed automatic transmission. Includes (TQ3) heavy-duty, dual 770 cold-cranking amp batteries, (KG3) 145-amp alternator, (K47) high-capacity air cleaner and (K05) engine block heater. 2 - Requires (MW7) Allison 1000 6-speed automatic transmission. Includes (TQ3) heavy-duty, dual 770 cold-cranking amp batteries, (KG3) 145-amp alternator, (K47) high-capacity air cleaner and (K05) engine block heater. Required with (YF2) Ambulance Package.	A[1]	A[2]	A[2]	A[1]

Free Flow RPO Code	Ref. Only RPO Code	Description 1 - Equipment group 1WT, 1LS, and 1LT available on C*36003, C*36403 and C*36053 Models. 2 - Equipment group 2LT available on C*36053 Models.	Reg. and Ext. Cab			Ext. Cab
			Work Truck 1WT[1]	LS 1LS[1]	LT1 1LT[1]	LT2 2LT[2]
V10		**Covers**, radiator grille and front bumper openings for diesel engines in winter weather 1 - Requires (LBZ) Duramax 6.6L Turbo Diesel V8 engine and is required on orders with "Ship To" locations within the following states: Maine, New Hampshire, Vermont, Minnesota, North Dakota, South Dakota, Montana, Alaska, Idaho, Wisconsin, Wyoming, Michigan, Colorado and New York.	A[1]	A[1]	A[1]	A[1]
		Exhaust, aluminized stainless-steel muffler and tailpipe	S	S	S	S
		Frame, hydroformed ladder-type	S	S	S	S
NQZ		**Fuel tank delete**, rear (deletes 23 gallon [87.1L] rear fuel tank, leaves 27 gallon [102.2L] front fuel tank) 1 - Not available with (YF2) Ambulance Package.	A	A[1]	A[1]	A
	C7W	**GVWR**, 11,400 lbs. (5171 kg) 1 - Standard with 2WD models only.	S[1]	S[1]	S[1]	S[1]
	C7L	**GVWR**, 12,000 lbs. (5443 kg) 1 - Standard with 4x4 models only.	S[1]	S[1]	S[1]	S[1]
PDN		**Heavy-Duty Power Package**, includes (LBZ) Duramax 6.6L Turbo Diesel engine, (MW7) Allison 1000 6-speed automatic transmission and (G80) heavy-duty rear locking differential	A	A	A	A
R6Y		**Heavy-Duty Power Package discount not desired**	A	A	A	A
GT4		**Rear axle**, 3.73 ratio 1 - Refer to Engine/Axle chart for availability.	A[1]	A[1]	A[1]	A[1]
	GT5	**Rear axle**, 4.10 ratio 1 - Refer to Engine/Axle chart for availability. 2 - Refer to Engine/Axle chart for availability. Not available with (YF2) Ambulance Package.	S[1]	S[2]	S[2]	S[1]
GTY		**Rear axle**, wide-track 1 - Increases axle 8" (20.3 cm) to 74" (188.0 cm) wide.	A[1]	A[1]	A[1]	A[1]
NZZ		**Skid Plate Package**, includes aluminum front underbody shield starting behind front bumper and running to first cross-member, protecting front underbody, oil pan, differential case and transfer case, frame-mounted shields 1 - Requires 4x4 models. Included with (VYU) Snow Plow Prep Package. 2 - Requires 4x4 models. Included with (VYU) Snow Plow Prep Package. Not available with (YF2) Ambulance Package.	A[1]	A[2]	A[2]	A[1]

Free Flow RPO Code	Ref. Only RPO Code	Description 1 - Equipment group 1WT, 1LS, and 1LT available on C*36003, C*36403 and C*36053 Models. 2 - Equipment group 2LT available on C*36053 Models.	Reg. and Ext. Cab			Ext. Cab
			Work Truck 1WT[1]	LS 1LS[1]	LT1 1LT[1]	LT2 2LT[2]
VYU		**Snow Plow Prep Package**, includes 10-amp power for backup and roof emergency light, (KG3) 145-amp alternator, high-flow front bumper, forward lamp wiring harness, 1.65" (42 mm) access hole with grommet in front of dash panel, roof beacon lamp provisions with switch on the instrument panel, instrument panel jumper wiring harness for electric trailer brake controller, (K47) high-capacity air cleaner and (NZZ) Skid Plate Package 1 - Requires 4x4 models. With CK36003 requires (XEC) LT215/85R16E all-season blackwall tires or (XEF) LT215/85R16E on-/off-road blackwall tires. With CK36053 or CK36403 models, requires (LQ4) Vortec 6.0L V8 SFI engine or (L18) Vortec 8.1L V8 SFI engine. Not available with (CJ2) dual-zone automatic air conditioning or (YF2) Ambulance Package.	A[1]	A[1]	A[1]	A[1]
		Steering, power	S	S	S	S
		Suspension, front independent with torsion bar and stabilizer bar	S	S	S	S
		Suspension, rear 3-stage springs	S	S	S	S
	Z85	**Suspension Package**, Handling/Trailering, heavy-duty, includes 36 mm piston monotube shocks	S	S	S	S
	NP2	**Transfer case**, floor-mounted shifter 1 - Standard with 4x4 models. Requires (AE7) front 40/20/40 split-bench seat.	S[1]	S[1]	S[1]	–
NP1		**Transfer case**, electronic shift with push-button controls 1 - Requires 4x4 models. Requires (MT1) heavy-duty 4-speed automatic transmission or (MW7) Allison 1000 6-speed automatic transmission. 2 - Requires 4x4 models.	–	–	A[1]	■[2]
	MW3	**Transmission**, 5-speed manual with overdrive 1 - Requires (LQ4) Vortec 6.0L V8 SFI engine.	S[1]	S[1]	S[1]	–
MT1		**Transmission**, 4-speed automatic, heavy-duty, electronically controlled with overdrive and tow/haul mode. Includes (KNP) external transmission oil cooler 1 - Requires (LQ4) Vortec 6.0L V8 SFI engine.	A[1]	A[1]	A[1]	S[1]

Free Flow RPO Code	Ref. Only RPO Code	Description 1 - Equipment group 1WT, 1LS, and 1LT available on C*36003, C*36403 and C*36053 Models. 2 - Equipment group 2LT available on C*36053 Models.	Reg. and Ext. Cab			Ext. Cab
			Work Truck 1WT[1]	LS 1LS[1]	LT1 1LT[1]	LT2 2LT[2]
MW7		**Transmission**, Allison 1000 6-speed automatic, electronically controlled with overdrive, electronic engine grade braking and tow/haul mode. Includes (KNP) external transmission oil cooler. Also, includes provisions to assist with an "aftermarket" PTO installation. These provisions allow your Dealership to install an interface harness and PTO Switch that mounts on the IP. This switch and interface harness is only available via GMSPO and is not installed at assembly. Once installed by your Dealership, it will enable your PTO controls to interface with vehicle electronic systems. (NOTE: PTO content not included if (YF2) Ambulance Package is ordered) 1 - Requires (L18) Vortec 8.1L V8 SFI engine or (LBZ) Duramax 6.6L Turbo Diesel V8 engine. 2 - Requires (L18) Vortec 8.1L V8 SFI engine or (LBZ) Duramax 6.6L Turbo Diesel V8 engine. Required with (YF2) Ambulance Package. PTO content not included if (YF2) Ambulance Package is ordered.	A[1]	A[2]	A[2]	A[1]

S = Standard Equipment A = Available -- (dashes) = Not Available
■ = Included in Equipment Group □ = Included in Equipment Group but upgradeable

*Indicates availability of feature on multiple models. For example, it indicates feature availability on 2WD and 4WD Models or Rear wheel drive and All-wheel drive Models.

		Transmissions			Axles		GVWR lbs. (kg)	
Model	Engine	MT1 4-Speed Automatic with OD	MW3 5-Speed Manual with OD	MW7 Allison 1000 6-Speed Automatic with OD	GT4 3.73	GT5 4.10	C7W 11,400 (5171)	C7L 12,000 (5443)
CC36**3	LQ4 Vortec 6.0L V8	A	S[1]	--	--	S	S	--
	L18 Vortec 8.1L V8 SFI	--	--	A	--	S	S	--
	LBZ Duramax 6.6L Turbo Diesel V8	--	--	A	A	--	S	--
CK36**3	LQ4 Vortec 6.0L V8	A	S	--	--	S	--	S
	L18 Vortec 8.1L V8 SFI	--	--	A	--	S	--	S
	LBZ Duramax 6.6L Turbo Diesel V8	--	--	A	A	--	--	S

1 - Not available with (**2) Leather seat trim. - Requires (AE7) front 40/20/40 split-bench seats.

S = Standard Equipment A = Available -- (dashes) = Not Available
■ = Included in Equipment Group □ = Included in Equipment Group but upgradeable

*Indicates availability of feature on multiple models. For example, it indicates feature availability on 2WD and 4WD Models or Rear wheel drive and All-wheel drive Models.

				Interior		
Decor Level	Seat Type	Seat Code	Seat Trim	Tan	Dark Charcoal	Medium Gray
Work Truck/ LS	Front 40/20/40 split-bench without armrest	AE7	Vinyl	52V	69V	--
Work Truck/ LS	Front 40/20/40 split-bench without armrest	AE7	Cloth	52C	69C	--
LS	Front reclining buckets	9S1[5]	Vinyl	52V	69V	--
Work Truck/ LS/ LT1	Front 40/20/40 reclining split-bench with armrest	AE7	Custom Cloth	52D	69D	--
LT1/ LT2	Front power reclining buckets	A95[1]	Custom Cloth[2]	52D	69D	--
LT1	Front 40/20/40 reclining split-bench with armrest	AE7	Custom Leather seating surfaces[2]	522	692	922
LT1/ LT2	Front power reclining buckets	A95[1]	Custom Leather seating surfaces[2]	522	692	922

			Interior			
Exterior Solid Paint	Color Code	Touch Up Paint Number	Tan	Dark Charcoal	Medium Gray	Front Wheel Flares Color LT[3]
Sandstone Metallic	15U	WA-929L	A	A	A	Sandstone Metallic
Graystone Metallic	16U	WA-213M	A	A	A	Graystone Metallic
Dark Blue Metallic	25U	WA-722J	A	A	A	Black
Black	41U	WA-8555	A	A	A	Black
Blue Granite Metallic	46U	WA-928L	A	A	A	Black
Dark Green Metallic	47U	WA-9539	A	A	A	Dark Green Metallic
Summit White	50U	WA-8624	A	A	A	Summit White
Silver Birch Metallic	59U	WA-926L	--	A	A	Silver Birch Metallic
Sport Red Metallic[4]	63U	WA-817K	A	A	A	Black
Victory Red	74U	WA-9260	A	A	A	Black

Above Interior trim combinations are the only combinations allowed.
1 - LT1 requires Fleet or Government order types.
2 - Not available with manual transmissions or Regular Cab Models.
3 - Wheel flares on front wheels only and are Black on LS Models.
4 - Not available on Work Truck or LS Models.
5 - Requires (YF2) Ambulance Package.

S = Standard Equipment A = Available -- (dashes) = Not Available
■ = Included in Equipment Group □ = Included in Equipment Group but upgradeable

*Indicates availability of feature on multiple models. For example, it indicates feature availability on 2WD and 4WD Models or Rear wheel drive and All-wheel drive Models.

Decor Level	Seat Type	Seat Code	Seat Trim	Interior		
				Tan	Dark Charcoal	Medium Gray
Work Truck/ LS	Front 40/20/40 split-bench without armrest	AE7	Vinyl	52V	69V	--
Work Truck/ LS	Front 40/20/40 split-bench without armrest	AE7	Cloth	52C	69C	--
Work Truck/ LS/ LT1	Front 40/20/40 reclining split-bench with armrest	AE7	Custom Cloth	52D	69D	--
LT1	Front 40/20/40 reclining split-bench with armrest	AE7	Custom Leather seating surfaces[2]	522	692	922
LT1/ LT2	Front power reclining buckets	A95[1]	Custom Cloth[2]	52D	69D	--
LT1/ LT2	Front power reclining buckets	A95[1]	Custom Leather seating surfaces[2]	522	692	922

Exterior Solid Paint	Color Code	Touch Up Paint Number	Interior		
			Tan	Dark Charcoal	Medium Gray
Yellow	none	WA-5248	A	A	A
Blue Metallic	none	WA-5405	A	A	A
Yellow	none	WA-5445	A	A	A
Yellow	none	WA-5456	A	A	A
Blue	none	WA-5663	A	A	A
Green - Low Gloss	none	WA-6237	A	A	A
Tan - Low Gloss	none	WA-6238	A	A	A
Blue	none	WA-7154	A	A	A
Blue Metallic	none	WA-7159	A	A	A
Gray Metallic	none	WA-7840	A	A	A
Green	none	WA-7941	A	A	A
Green, Woodland	9V5	WA-9015	A	A	A
Doeskin Tan	9V9	WA-9403	A	A	A
Orange	none	WA-9408	A	A	A
Yellow	none	WA-9414	A	A	A
Tangier Orange	9W4	WA-9417	A	A	A
Orange	none	WA-9419	A	A	A

Indigo Blue	none	WA-9792	A	A	A
NEW! Brown	none	WA-195E	A	A	A
Light Autumnwood Metallic	none	WA-228A	A	A	A
Wheatland Yellow	9W3	WA-253A	A	A	A
Dark Toreador Red	none	WA-334D	A	A	A
Pewter	none	WA-382E	A	A	A
Blue	none	WA-769H	A	A	A
Orange	none	WA-770H	A	A	A
Green	none	WA-5758	A	A	A
NEW! Arrival Blue	none	WA-815K	A	A	A
NEW! Blue	none	WA-454N	A	A	A

All wheel flares, mirrors, body side moldings, door handles, bumpers and fascia will be Black.

1 - LT1 requires Fleet or Government order types.

2 - Not available with manual transmissions or Regular Cab Models.

S = Standard Equipment A = Available – (dashes) = Not Available D = ADI Available
■ = Included in Equipment Group □ = Included in Equipment Group but upgradeable

*Indicates availability of feature on multiple models. For example, it indicates feature availability on 2WD and 4WD Models or Rear wheel drive and All-wheel drive Models.

Codes listed in the shaded column titled Ref. Only RPO Code are for internal use only and should not be ordered.

Free Flow RPO Code	Ref. Only RPO Code	Description 1 - Equipment group 1WT, 1LS, and 1LT available on C*36003, C*36403 and C*36053 Models. 2 - Equipment group 2LT available on C*36053 Models.	Reg. and Ext. Cab Work Truck 1WT[1]	Reg. and Ext. Cab LS 1LS[1]	Reg. and Ext. Cab LT1 1LT[1]	Ext. Cab LT2 2LT[2]
		Interior				
6C7		**Console, roof with reading lamps (MSRP = $55.00)** Provides a short interior roof console with spot reading lamps and up-level headliner.	A	A	--	--
9D9		**Inside rear view mirror delete (MSRP = -$3.00 Credit)** Deletes the standard inside rear view mirror. **1 - Requires one of the following: RPO (DF2) outside camper-style, Black mirrors, SEO (9F2) outside mirror delete, SEO (9F7) outside West Coast-type mirrors, SEO (8G9) outside, convex combination, stainless steel mirrors or SEO (6R2) outside, sail panel-mounted, wide field of vision, Black mirrors.**	A[1]	A[1]	--	--
5B5		**Power windows and mirrors (MSRP = $738.00)** Provides power driver and passenger windows on a base trim level, includes SEO (5M1), LH and RH outside power adjustable, manual folding, non-heated, non-extendable mirrors and up level door panels. The mirror head is the same size and configuration as the base power mirror on LT Décor. **1 - Requires RPO (AU3) power programmable door locks. Power mirrors can be upgraded to SEO (6P3) outside, power-extendable, camper mirrors.**	A[1]	A[1]	--	--
8Q3		**Rear seat delete (MSRP = -$375.00 Credit)** Provides deletion of the rear seat on Extended Cab. Exposed areas will remain untrimmed. **1 - Available on models C*36053. Requires RPO (AE7) front 40/20/40 split-bench seat and available with (9U3) front individual cloth seats or (9S1) front individual vinyl seats.**	A[1]	A[1]	--	--
9U4		**Remote keyless entry (MSRP = $170.00)** Provides remote keyless entry on LS Décor or Work Truck Décor pick-up trucks. Includes two transmitters, and deletes the lock cylinder on the right hand door. **1 - Requires RPO (AU3) power door locks and SEO (5B5) power windows and mirrors. Not available with uplevel decors.**	A[1]	A[1]	--	--

Free Flow RPO Code	Ref. Only RPO Code	Description 1 - Equipment group 1WT, 1LS, and 1LT available on C*36003, C*36403 and C*36053 Models. 2 - Equipment group 2LT available on C*36053 Models.	Reg. and Ext. Cab Work Truck 1WT[1]	Reg. and Ext. Cab LS 1LS[1]	Reg. and Ext. Cab LT1 1LT[1]	Ext. Cab LT2 2LT[2]
9U3		**Seats, cloth bucket (MSRP = No Charge) with Work Truck and (MSRP = -$282.00) with LS Decor** Driver and passenger front individual seats in cloth trim (derived from AE7 40/20/40 Split Bench with center 20" section removed). Does not include a floor or roof console. Cloth rear seat with trim matching front seats will be provided on Extended Cabs. **1 - Requires trim codes (69C) Dark Charcoal or (52C) Tan on Regular or Extended Cab models. Available with (8Q3) rear seat delete. Not available with RPO (AG1) 6-way power driver seat adjuster or with RPO (YF2) Ambulance Package.**	A[1]	A[1]	--	--
9S1		**Seats, individual vinyl (MSRP = -$282.00 Credit) on LS Decor and (MSRP = No Charge) on Work Truck Decor** Driver and passenger front individual seats in vinyl trim (derived from RPO (AE7) 40/20/40 Split Bench with center 20" section removed). Does not include manual lumbar. Seats are manual, not power. Does not include a floor or roof console. Standard vinyl rear seat with trim matching front seats will be provided on Extended Cabs. Note: "When SEO (9S1) is desired/ordered, do not attempt to have RPO (AE7) on the order along with 9S1. Also, RPO (A95) will be forced onto the order due to system requirements, although seat is derived from RPO (AE7)." **1 - Requires Trim codes (69V) Dark Charcoal or (52V) Tan. Available with (8Q3) rear seat delete. Not available with RPO (AG1) 6-way power driver seat adjuster or with RPO (YF2) Ambulance Package.**	A[1]	A[1]	--	--
9R3		**Sound system, delete (MSRP = No Charge)** Fleet option. Provides a stowage tray and a driver alert chime tone module. Retains antenna and base speaker system. **1 - Requires a Fleet or Government order type.**	A[1]	A[1]	--	--
9R0		**Sound system, ETR AM/FM stereo with cassette (MSRP = $150.00) with Work Truck and (MSRP = No Charge) with LS or LT1 Decor** AM/FM stereo with cassette and digital clock, no CD player. Replaces the base radio. **1 - Requires a Fleet or Government sales order. Requires RPO (AE7) front 40/20/40 split-bench seat on 1LT. Not available with RPO (UK3) steering-wheel mounted audio controls, (UE1) OnStar or (PDB) OnStar Plus Package.**	A[1]	A[1]	A[1]	--
		Exterior				
8S3		**Backup alarm (MSRP = $103.00)** 97 decibels back-up alarm. **1 - Not available with RPO (LBZ) Duramax 6.6L Turbo Diesel V8 engine. Not available with RPO (LQ4) Vortec 6.0L V8 SFI engine on models C*36053. Not available with RPO (YF5) California state emissions requirements or RPO (NE1) Maine, Massachusetts, New York or Vermont state emissions requirements when ordered on models C*36053 with RPO (L18) Vortec 8.1L V8 SFI engine.**	A[1]	A[1]	A[1]	A[1]

Free Flow RPO Code	Ref. Only RPO Code	Description 1 - Equipment group 1WT, 1LS, and 1LT available on C*36003, C*36403 and C*36053 Models. 2 - Equipment group 2LT available on C*36053 Models.	Reg. and Ext. Cab			Ext. Cab
			Work Truck 1WT[1]	LS 1LS[1]	LT1 1LT[1]	LT2 2LT[2]
8H5		**Bumper, delete (MSRP = -$145.00 Credit)** Deletes the standard front bumper. Retains the Standard Frame Mounted Tow Hooks on 4WD Models. 1 - Not available with RPO (V76) on 2WD models. 2 - Not available with RPO (V76) on 2WD models. Not available with RPO (T96) fog lamps.	A[1]	A[1]	A[2]	A[2]
8E9		**Bumper, front, painted White (MSRP = $45.00)** Provides a White painted front bumper in lieu of standard chrome.	A	A	--	--
9B4		**Fuel fill cap with stainless steel tether Standard dual fuel tanks (MSRP = $30.00) and with RPO (NQZ) Fuel tank delete (MSRP = $15.00)** Provides a fuel fill pipe cap with a stainless steel tether in lieu of the standard plastic tether. 1 - Requires RPO (NQZ) rear fuel tank delete and RPO (L18) Vortec 8.1L V8 SFI engine.	A[1]	A[1]	A[1]	A[1]
5M9		**High level stop lamp (CHMSL) delete (MSRP = No Charge)** Deletes the high level stop lamp (CHMSL) and covers the opening with a protective cover. Note: CHMSL delete is standard on 4WD Models. 1 - Requires 2WD models. Not available with RPO (K34) cruise control when ordered with SEO (5Q1) tail lamp delete.	A[1]	A[1]	--	--
5Z5		**Hubcap delete (MSRP = -$18.00 Credit)** Deletes decorative cap at center of wheel.	A	--	--	--
8V2		**Jack and tools delete (MSRP = -$32.00 Credit)** Deletes the jack and tire change tools that are standard. 1 - Requires a Fleet or Government order type.	A[1]	A[1]	A[1]	A[1]
8X1		**Label, fasten safety belts (MSRP = $2.00)** "Fasten Safety Belts" reminder label on side door window glass.	A	A	A	A
	5M1	**Mirror, exterior, power adjustable, manual folding, non-heated and non-extendable (MSRP = No Charge)** Provides the left and right hand side outside power adjustable, manual folding, non-heated, non-extendable, rear view mirrors that are included with SEO (5B5) Power windows and mirrors. Mirror head is the same size and configuration as the base mirror supplied on first tire Uplevel Décors except that the mirror head is not heated and not extendable. 1 - Included and only available with SEO (5B5) power windows and mirrors.	A[1]	A[1]	--	--

Free Flow RPO Code	Ref. Only RPO Code	Description 1 - Equipment group 1WT, 1LS, and 1LT available on C*36003, C*36403 and C*36053 Models. 2 - Equipment group 2LT available on C*36053 Models.	Reg. and Ext. Cab			Ext. Cab
			Work Truck 1WT[1]	LS 1LS[1]	LT1 1LT[1]	LT2 2LT[2]
9F2		**Mirror, outside delete (MSRP = -$25.00 Credit)** Deletes driver and passenger outside rearview mirrors that are standard on the vehicle. Incomplete vehicle documentation. 1 - Requires a Fleet sales order. Not available with SEO (5B5) Power windows and mirrors.	A[1]	A[1]	--	--
9N8		**Mirrors, auxiliary dual spot convex, stainless steel (MSRP = $50.00)** Driver and passenger side 6" (15.2 cm) diameter convex spot add-on mirrors with brackets for use with West Coast style mirrors. Mirrors shipped loose in vehicle. 1 - Requires SEO (9F7) outside West Coast-type mirrors. Not available with SEO (5B5) Power windows and mirrors.	A[1]	A[1]	--	--
8G9		**Mirrors, outside, convex combination, stainless steel (MSRP = $278.00)** Provides a convex combination driver and passenger side outside rearview mirror with 6" x 10" (15.2 cm x 25.4 cm) flat positioned over a 6" x 6.5" (15.2 cm x 16.5 cm) convex mirror head. Provides drilling in cab and mirror assembly shipped loose. For use with wide body applications up to 96" (243.8 cm). 1 - Not available with SEO (5B5) Power windows and mirrors.	A[1]	A[1]	S	--
9F7		**Mirrors, outside driver and passenger side West Coast type (MSRP = $125.00)** Provides large West Coast style mirrors with spring loaded pre-set feature. Mirrors are Black. Includes cab drillings and mirror assembly shipped loose. 1 - Not available with SEO (5B5) Power windows and mirrors.	A[1]	A[1]	S	--
6P3		**Mirrors, outside rearview, power, non-heated, camper-style. (MSRP = $238.00)** Provides power adjustable, manual extendable, non-heated convex combination RH and LH outside rearview mirrors consisting of a 50 sq. in, flat mirror surface positioned over a 20 sq. in. convex mirror surface within a common head. Includes turn signals in the mirror heads. 1 - Requires RPO (AU3) power programmable door locks and SEO (5B5) power windows and mirrors.	A[1]	A[1]	--	--
6R2		**Mirrors, outside rearview, sail panel mounted wide field of vision, manual adjust, black (MSRP = $250.00)** Provides convex combination RH and LH that are sail panel mounted, has 63.3 sq. inch flat glass positioned over a 30.1 sq. inch convex glass within a common head. Mirrors are shipped loose in vehicle. 1 - Not available with SEO (5B5) power windows and mirrors.	A[1]	A[1]	--	--

Free Flow RPO Code	Ref. Only RPO Code	Description 1 - Equipment group 1WT, 1LS, and 1LT available on C*36003, C*36403 and C*36053 Models. 2 - Equipment group 2LT available on C*36053 Models.	Reg. and Ext. Cab			Ext. Cab
			Work Truck 1WT[1]	LS 1LS[1]	LT1 1LT[1]	LT2 2LT[2]
8F2		**Ornamentation, delete (MSRP = No Charge)** Deletes decals and nameplates on truck exterior. 1 - Requires Upfitter order type.	A[1]	A[1]	--	--
9V9		**Paints, solid (MSRP = No Charge),** Doeskin Tan 1 - Requires SEO (TGK) solid paint.	A[1]	A[1]	A[1]	A[1]
9W4		**Paints, solid (MSRP = No Charge),** Tangier Orange 1 - Requires SEO (TGK) solid paint.	A[1]	A[1]	A[1]	A[1]
9W3		**Paints, solid (MSRP = No Charge),** Wheatland Yellow 1 - Requires SEO (TGK) solid paint.	A[1]	A[1]	A[1]	A[1]
9V5		**Paints, solid (MSRP = No Charge),** Woodland Green 1 - Requires SEO (TGK) solid paint.	A[1]	A[1]	A[1]	A[1]
5Y0		**Provision for body mounted lamp with hook-up wiring (MSRP = $88.00)** Provides an instrument panel mounted switch and electrical hook-up behind the cab for a body upfitter to connect a body mounted warning or emergency lamp. 21 amp nominal rating. 1 - Not available with RPO (LBZ) Duramax 6.6L Turbo Diesel V8 engine, SEO (5G4) provision for cab roof-mounted lamp, SEO (5X7) provision for body-mounted lamp, RPO (VYU) Snow Plow Prep Package. Not available with RPO (LQ4) Vortec 6.0L V8 SFI engine on models C*36053. Not available with RPO (YF5) California state emissions requirements or RPO (NE1) Maine, Massachusetts, New York or Vermont state emissions requirements when ordered on models C*36053 with RPO (L18) Vortec 8.1L V8 SFI engine. Not available with RPO (MW3) 5-speed manual transmission.	A[1]	A[1]	A[1]	A[1]
5X7		**Provision for body mounted warning lamp (MSRP = $98.00)** Provides an instrument panel mounted switch and heavy duty electrical relay with hook-up terminal in the engine compartment for a body upfitter to connect a body mounted warning or emergency lamp. 40 amp nominal rating. 1 - Requires RPO (LQ4) Vortec 6.0L V8 SFI engine or RPO (L18) Vortec 8.1L V8 SFI engine. Requires RPO (FE9) Federal emissions requirements or RPO (VCL) CFV (Clean Fuel Vehicle) LEV (Low Emission Vehicle) with RPO (L18) Vortec 8.1L V8 SFI engine on models C/K36053. Not available with RPO (LQ4) Vortec 6.0L V8 SFI engine on models C/K36053, RPO (TP2) auxiliary, heavy-duty, 600 cold-cranking-amp battery, SEO (8B0) 770 cold-cranking -amp battery with a auxiliary 600 cold-cranking-amp battery, SEO (5G4) provision for cab roof-mounted lamp, SEO (5Y0) provision for body-mounted lamp with hook-up wiring or RPO (VYU) Snow Plow Prep Package. Not available with RPO (MW3) 5-speed manual transmission.	A[1]	A[1]	A[1]	A[1]

Free Flow RPO Code	Ref. Only RPO Code	Description 1 - Equipment group 1WT, 1LS, and 1LT available on C*36003, C*36403 and C*36053 Models. 2 - Equipment group 2LT available on C*36053 Models.	Reg. and Ext. Cab			Ext. Cab
			Work Truck 1WT[1]	LS 1LS[1]	LT1 1LT[1]	LT2 2LT[2]
5G4		**Provision for cab roof-mounted lamp (MSRP = $103.00)** Instrument panel mounted switch and wiring to the roof of the cab for body upfitter to install and connect a cab roof mounted warning or emergency lamp. 21 amp nominal rating. Circuit access instructions are furnished. 1 - Not available with RPO (VYU) Snow Plow Prep Package, RPO (UE1) OnStar, 1-year of Safe & Sound service, SEO (5Y0) Provision for body-mounted lamp with hook-up wiring or SEO (5X7) Provision for body-mounted warning lamp.	A[1]	A[1]	A[1]	A[1]
5X9		**Provisions, wrecker package (MSRP =$25.00)** Provides increased rate rear springs to control vehicle rear height trim on vehicles involved with heavy loads positioned behind the rear axle. Does not provide modified brake proportioning. 1 - Requires Regular Cab models.	A[1]	A[1]	A[1]	A[1]
9H5		**Roof marker lamp delete (MSRP = No Charge)** Deletes the roof marker lamps on the cab roof.	A	A	A	A
TGK		**Solid Paint** SEO solid paint, one color 1 - Required with any SEO paint selection. May require extended lead time.	A[1]	A[1]	A[1]	A[1]
5Q1		**Tail Lamp delete (MSRP = -$27.00 Credit)** Body builder option. Deletes the tail lamps and rear license plate lamp on commercial chassis-cab models if requested by body builders who supply their own rear lighting system. 1 - Not available with RPO (K34) cruise control and when ordered with SEO (5M9) CHMSL delete on 2WD models and not available with RPO (K34) cruise control on 4x4 models or with RPO (YF2) Ambulance Package.	A[1]	A[1]	--	--
4EC		**Tire, spare (MSRP = $410.00)** 1 - Requires SEO (2EC) front and rear tires and models C*36003 only.	A[1]	A[1]	A[1]	A[1]
8R3		**Tire valve stems, brass (MSRP = $50.00)** Provides brass tire valve stems.	A	A	A	A
2EC		**Tires, front and rear (MSRP = $55.00)** Provides LT215/85R16 (E) 10 Ply blackwall highway tires on a 137" (348 cm) wheelbase Chassis Cab. 1 - Requires models C*36003. Requires RPO (LQ4) Vortec 6.0L V8 SFI engine or RPO (L18) Vortec 8.1L V8 SFI engine. Not available with RPO (VYU) Snow Plow Prep Package.	A[1]	A[1]	A[1]	A[1]
5G2		**Wheels, painted White (MSRP = $55.00)** Front and rear (vendor supplied.) Spare wheel will not be White.	A	--	--	--
		Mechanical				

Free Flow RPO Code	Ref. Only RPO Code	Description 1 - Equipment group 1WT, 1LS, and 1LT available on C*36003, C*36403 and C*36053 Models. 2 - Equipment group 2LT available on C*36053 Models.	Reg. and Ext. Cab			Ext. Cab
			Work Truck 1WT[1]	LS 1LS[1]	LT1 1LT[1]	LT2 2LT[2]
8C6		**Alternator, 145 amp (MSRP = $140.00)** 145 amp alternator in place of the standard 105 amp alternator. 1 - Requires RPO (LQ4) Vortec 6.0L V8 SFI engine or RPO (L18) Vortec 8.1L V8 SFI engine. Not available with RPO (VYU) Snow Plow Prep Package.	A[1]	A[1]	A[1]	A[1]
8X5		**Alternators, dual 105 amp (MSRP =$224.00)** Provides 210 amps total alternator power from a dual 105 amp alternator system. 1 - Requires RPO (LBZ) Duramax 6.6L Turbo Diesel V8 engine. Not available with RPO (VYU) Snow Plow Prep Package.	A[1]	A[1]	A[1]	A[1]
8B0		**Batteries, 770 CCA with a 600 CCA auxiliary (MSRP = $190.00)** 770 CCA main cranking battery with a 600 CCA auxiliary battery. Auxiliary battery has an isolator and is not wired to ignition: provides an auxiliary electrical power source. 1 - Requires RPO (LQ4) Vortec 6.0L V8 SFI engine or RPO (L18) Vortec 8.1L V8 SFI engine. Not available with RPO (TP2) auxiliary heavy-duty, 600 cold-cranking-amp battery, or SEO (7Y9) single 770 cold-cranking-amp battery.	A[1]	A[1]	A[1]	A[1]
7Y9		**Battery, Single 770 CCA (MSRP = $56.00)** Provides a 770 CCA HD cranking battery. 1 - Requires RPO (LQ4) Vortec 6.0L V8 SFI engine or RPO (L18) Vortec 8.1L V8 SFI engine. Not available with RPO (TP2) auxiliary heavy-duty, 600 cold-cranking-amp battery or SEO (8B0) 770 cold-cranking-amp battery with a auxiliary heavy-duty, 600 cold-cranking-amp battery.	A[1]	A[1]	A[1]	A[1]
7Z1		**Horn, high note (MSRP = $20.00)** In addition to base low note horn.	A	A	–	–
9L4		**Power supply, 12 volt (MSRP = $168.00)** 12 volt direct power supply from the battery with two separate 30 amp fused circuits. Each circuit has a 30 amp mini fuse for both positive and ground to protect electrical accessories. Main supply lead has a 40 amp maxi-fuse. All fuses are serviceable. Provides either direct battery power or operation through the ignition system. Hook-up wire is provided under the passenger side glove box. Operational amperage is 21 amps each circuit; 28 amps total. Hook-up and operational instructions are provided. 1 - Not available with RPO (U2K) XM Satellite Radio or RPO (UE1) OnStar or RPO (MW3) 5-speed manual transmission.	A[1]	A[1]	A[1]	A[1]
		Ship Thru Codes				
VAB		**Ship Thru for Models C*36**3 (MSRP = $165.00)** Produced in Pontiac Assembly and shipped to NBC Truck Equipment	A	A	A	A
VAY		**Ship Thru for Models C*36**3 (MSRP = $165.00)** Produced in Pontiac Assembly and shipped to K&B Mounting	A	A	A	A

Free Flow RPO Code	Ref. Only RPO Code	Description 1 - Equipment group 1WT, 1LS, and 1LT available on C*36003, C*36403 and C*36053 Models. 2 - Equipment group 2LT available on C*36053 Models.	Reg. and Ext. Cab			Ext. Cab
			Work Truck 1WT[1]	LS 1LS[1]	LT1 1LT[1]	LT2 2LT[2]
VBK		**Ship Thru for Models C*36**3 (MSRP = $270.00)** Produced in Pontiac Assembly and shipped to Ft. Wayne Fleet Equipment	A	A	A	A
VFI		**Ship Thru for TDM Vehicle Management (MSRP = $165.00)** In Auburn Hills, MI from the Pontiac Assembly Plant 1 - Requires models CK36403, or CK36053	A[1]	A[1]	A[1]	A[1]
VGH		**Ship Thru for Models C*36**3 (MSRP = $160.00)** Produced in Pontiac Assembly and shipped to Monroe Truck Equipment	A	A	A	A
VGZ		**Ship Thru for Models C*360*3 and CK36403 (MSRP = $165.00)** Produced in Pontiac Assembly and shipped to Canfield	A	A	A	A
VWS		**Ship Thru for Models C*36**3 (MSRP = $310.00)** Produced in Pontiac Assembly and shipped to Buckeye Truck Equipment	A	A	A	A
VYC		**Ship Thru for Models C*36**3 (MSRP = $160.00)** Produced in Pontiac Assembly and shipped to Knapheide Truck Equipment	A	A	A	A
VYS		**Ship Thru for Models C*360*3 and CK36403 (MSRP = $165.00)** Produced in Pontiac Assembly and shipped to Masterack Truck Equipment	A	A	A	A

S = Standard Equipment A = Available – (dashes) = Not Available D = ADI Available
■ = Included in Equipment Group □ = Included in Equipment Group but upgradeable

*Indicates availability of feature on multiple models. For example, it indicates feature availability on 2WD and 4WD Models or Rear wheel drive and All-wheel drive Models.

Codes listed in the shaded column titled Ref. Only RPO Code are for internal use only and should not be ordered.

Free Flow RPO Code	Ref. Only RPO Code	Description 1 - Equipment group 1WT, 1LS, and 1LT available on C*36003, C*36403 and C*36053 Models. 2 - Equipment group 2LT available on C*36053 Models.	Reg. and Ext. Cab Work Truck 1WT[1]	Reg. and Ext. Cab LS 1LS[1]	Reg. and Ext. Cab LT1 1LT[1]	Ext. Cab LT2 2LT[2]
R8G		**OnStar 1 Additional Year of Safe and Sound Service (MSRP= $199).** Provides 1 year of Safe and Sound service following the first year of OnStar service included in the price of the vehicle. Fleet may also order (RFB) 2-Years OnStar Business Vehicle Manager Service **1 - Requires one of the following Fleet or Government order types: FLS, FNR, FRC, FBC, FGO or FEF. Not available with R8P, R8U, R8V, R8W, R8Y or R8Z. Requires (UE1) 1-Year OnStar service.**	--	--	A[1]	A[1]
R8P		**OnStar 2 Additional Years of Safe and Sound Service (MSRP=$379)** Provides 2 additional years of Safe and Sound service following the first year of OnStar service included in the price of the vehicle. Fleet may also order (RFC) 3-Years OnStar Business Vehicle Manager Service **1 - Requires one of the following Fleet or Government order types: FLS, FNR, FRC, FBC, FGO or FEF. Not available with R8G, R8U, R8V, R8W, R8Y or R8Z. Requires (UE1) 1-Year OnStar service.**	--	--	A[1]	A[1]
R8U		**OnStar 3-Years Safe and Sound Service (MSRP=$679)** Provides 3 Years of Safe and Sound service. Includes cost of hardware. Fleet may also order (RFC) 3-Years OnStar Business Vehicle Manager Service **1 - Requires one of the following Fleet or Government order types: FLS, FNR, FRC, FBC, FGO or FEF. Requires (UE1) 1-Year OnStar service. Not available with R8G, R8P, R8V, R8W, R8Y or R8Z.**	--	--	A[1]	A[1]
R8V		**OnStar 3-Years Directions and Connections Service (MSRP=$979)** Provides 3 years of Directions and Connections service. Includes cost of hardware. Fleet may also order (RFC) 3-Years OnStar Business Vehicle Manager Service **1 - Requires one of the following Fleet or Government order types: FLS, FNR, FRC, FBC, FGO or FEF. Requires (UE1) 1-Year OnStar service. Not available with R8G, R8P, R8U, R8W, R8Y or R8Z.**	--	--	A[1]	A[1]
R8W		**OnStar 1-Year Directions and Connections Service (MSRP=$100)** Provides an upgrade from Safe and Sound service included in the price of the vehicle in the first year. Fleet may also order (RFA) 1-Year OnStar Business Vehicle Manager Service **1 - Requires one of the following Fleet or Government order types: FLS, FNR, FRC, FBC, FGO or FEF. Not available with R8G, R8P, R8U, R8V, R8Y or R8Z. Requires (UE1) 1-Year OnStar service.**	--	--	A[1]	A[1]

Free Flow RPO Code	Ref. Only RPO Code	Description 1 - Equipment group 1WT, 1LS, and 1LT available on C*36003, C*36403 and C*36053 Models. 2 - Equipment group 2LT available on C*36053 Models.	Reg. and Ext. Cab Work Truck 1WT[1]	Reg. and Ext. Cab LS 1LS[1]	Reg. and Ext. Cab LT1 1LT[1]	Ext. Cab LT2 2LT[2]
R8Y		**OnStar 2-Years Directions and Connections Service (MSRP=$399)** Provides cumulative 2 Years of Directions and Connections service. In the first year, this is an upgrade from Safe and Sound service included in the price of the vehicle. Fleet may also order (RFB) 2-Years OnStar Business Vehicle Manager Service **1 - Requires one of the following Fleet or Government order types: FLS, FNR, FRC, FBC, FGO or FEF. Not available with R8G, R8P, R8U, R8V, R8W or R8Z. Requires (UE1) 1-Year OnStar service.**	--	--	A[1]	A[1]
R8Z		**OnStar 3-Years Directions and Connections Service (MSRP=$679)** Provides cumulative 3 Years of Directions and Connections service. In the first year, this is an upgrade from Safe and Sound service included in the price of the vehicle. Fleet may also order (RFC) 3-Year OnStar Business Vehicle Manager Service **1 - Requires one of the following Fleet or Government order types: FLS, FNR, FRC, FBC, FGO or FEF. Not available with R8G, R8P, R8U, R8V, R8W or R8Y. Requires (UE1) 1-Year OnStar service.**	--	--	A[1]	A[1]
RFA		**OnStar 1-Year Business Vehicle Manager Service (MSRP=$25)** Provides one year of OnStar Business Vehicle Manager Service **1 - Requires one of the following Fleet or Government order types: FLS, FNR, FRC, FBC, FGO or FEF. Not available with RFB or RFC. Requires (UE1) 1-Year OnStar service or (R8W) 1-Year Directions and Connections Service.**	--	--	A[1]	A[1]
RFB		**OnStar 2-Years Business Vehicle Manager Service (No charge)** Provides two years of OnStar Business Vehicle Manager Service **1 - Requires one of the following Fleet or Government order types: FLS, FNR, FRC, FBC, FGO or FEF. Not available with RFA or RFC. Requires (UE1) 1-Year OnStar service and either (R8G) or (R8Y) which provide for a total of two years of OnStar service.**	--	--	A[1]	A[1]
RFC		**OnStar 3-Years Business Vehicle Manager Service (No Charge)** Provides three years of OnStar Business Vehicle Manager Service **1 - Requires one of the following Fleet or Government order types: FLS, FNR, FRC, FBC, FGO or FEF. Not available with RFA or RFB. Requires (UE1) 1-Year OnStar service and either (R8P), (R8U), (R8V), or (R8Z) which provide for a total of three years of OnStar service.**	--	--	A[1]	A[1]

2007 Chevrolet Truck Silverado 3500 CC ADI - ACCESSORIES
Classic

There is no data available for Silverado 3500 CC Classic.

2007 Chevrolet Truck Silverado 3500 CC DIMENSIONS
Classic

All dimensions in inches (mm) unless otherwise stated.

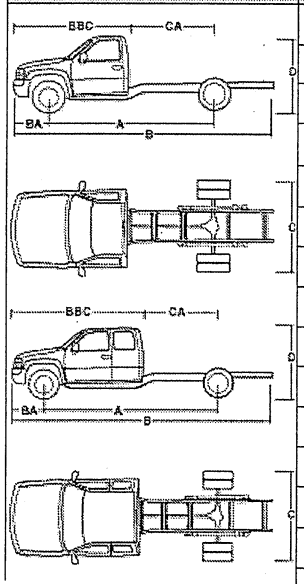

	Specifications	CC36003 2WD Regular Cab	CK36003 4x4 Regular Cab	CC36403 2WD Regular Cab	CK36403 4x4 Regular Cab	CC36053 2WD Extended Cab	CK36053 4x4 Extended Cab
A	Wheelbase	137.00 (3480)	137.00 (3480)	161.50 (4102)	161.50 (4102)	161.50 (4102)	161.50 (4102)
B	Overall length	225.00 (5715)	225.00 (5715)	249.50 (6337)	249.50 (6337)	249.50 (6337)	249.50 (6337)
C	Body width	86.00 (2184)	86.00 (2184)	86.00 (2184)	86.00 (2184)	86.00 (2184)	86.00 (2184)
	Body width, with (GTY) Rear axle	93.90 (2385)	93.90 (2385)	93.90 (2385)	93.90 (2385)	93.90 (2385)	93.90 (2385)
D	Overall height	76.00 (1930)	76.00 (1930)	76.00 (1930)	76.00 (1930)	76.00 (1930)	76.00 (1930)
	Head room, front	41.10 (1044)	41.10 (1044)	41.10 (1044)	41.10 (1044)	41.10 (1044)	41.10 (1044)
	Head room, rear	--	--	--	--	38.40 (975)	38.40 (975)
	Shoulder room, front	65.70 (1669)	65.70 (1669)	65.70 (1669)	65.70 (1669)	65.70 (1669)	65.70 (1669)
	Shoulder room, rear	--	--	--	--	66.40 (1687)	66.40 (1687)
	Hip room, front	61.50 (1562)	61.50 (1562)	61.50 (1562)	61.50 (1562)	61.50 (1562)	61.50 (1562)
	Hip room, rear	--	--	--	--	61.50 (1562)	61.50 (1562)
	Leg room, front	41.30 (1049)	41.30 (1049)	41.30 (1049)	41.30 (1049)	41.30 (1049)	41.30 (1049)
	Leg room, rear	--	--	--	--	38.40 (975)	38.40 (975)
CA	Cab to axle	60.40 (1534)	60.40 (1534)	84.90 (2156)	84.90 (2156)	60.40 (1534)	60.40 (1534)
BA	Front bumper to axle	37.00 (940)	37.00 (940)	37.00 (940)	37.00 (940)	37.00 (940)	37.00 (940)
BBC	Front bumper to back of cab	113.60 (2885)	113.60 (2885)	113.60 (2885)	113.60 (2885)	138.10 (3508)	138.10 (3508)

Published dimensions indicated are without optional equipment or accessories. Additional accessories or equipment ordered at the customer's request can result in a minor change in these dimensions.

2007 Chevrolet Truck Silverado 3500 CC SPECS - REGULAR CAB
Classic

	CC36003 2WD Regular Cab	CC36403 2WD Regular Cab	CK36003 4x4 Regular Cab	CK36403 4x4 Regular Cab
Specifications				
Front shock absorber diameter, in. (mm)	1.38 (35)	1.38 (35)	1.38 (35)	1.38 (35)
Front stabilizer bar diameter, in. (mm)	1.25 (32)	1.25 (32)	1.25 (32)	1.25 (32)
Rear shock absorber diameter, in. (mm)	1.38 (35)	1.38 (35)	1.38 (35)	1.38 (35)
Turning diameter, curb-to-curb, ft. (m)	44.9 (13.7)	51.9 (15.8)	44.9 (13.7)	51.9 (15.8)
Capacities				
Front axle, lbs. (kg)	4800 (2177)	4800 (2177)	4800 (2177)	4800 (2177)
Front spring capacity, lbs. (kg)	4500 (2041)	4800 (2177)	4800 (2177)	4800 (2177)
Rear axle, lbs. (kg)	9200 (4173)	9200 (4173)	9200 (4173)	9200 (4173)
Rear spring capacity, lbs. (kg)	8600 (3901)	8600 (3901)	8600 (3901)	8600 (3901)
Curb weight, lbs. (kg)	5503 (2496)	5586 (2534)	5774 (2619)	5887 (2670)
Payload[1], lbs. (kg)	5897 (2675)	5814 (2637)	6226 (2824)	6113 (2773)
Gross Vehicle Weight Rating (GVWR), lbs. (kg)	11400 (5171)	11400 (5171)	12000 (5443)	12000 (5443)
Front Gross Axle Weight Rating (GAWR), lbs. (kg)	4500 (2041)	4670 (2118)	4670 (2118)	4800 (2177)
Rear Gross Axle Weight Rating (GAWR), lbs. (kg)	8550 (3878)	8550 (3878)	8600 (3901)	8600 (3901)
Fuel capacity, approximate, gallon (liters)	50 (189)	50 (189)	50 (189)	50 (189)
Seating capacity	3	3	3	3

1. Maximum payload capacity includes weight of driver, passengers, optional equipment and cargo.

2007 Chevrolet Truck Silverado 3500 CC SPECS - EXTENDED CAB
Classic

	CC36053 2WD Extended Cab	CK36053 4x4 Extended Cab
Specifications		
Front shock absorber diameter, in. (mm)	1.38 (35)	1.38 (35)
Front stabilizer bar diameter, in. (mm)	1.25 (32)	1.18 (30)
Rear shock absorber diameter, in. (mm)	1.38 (35)	1.38 (35)
Turning diameter, curb-to-curb, ft. (m)	51.9 (15.8)	51.9 (15.8)
Capacities		
Front axle, lbs. (kg)	4800 (2177)	4800 (2177)
Front spring capacity, lbs. (kg)	4800 (2177)	4800 (2177)
Rear axle, lbs. (kg)	9200 (4173)	9200 (4173)
Rear spring capacity, lbs. (kg)	8600 (3901)	8600 (3901)
Curb weight, lbs. (kg)	5977 (2711)	6272 (2845)
Payload[2], lbs. (kg)	5423 (2460)	5728 (2598)
Gross Vehicle Weight Rating (GVWR), lbs. (kg)	11400 (5171)	12000 (5443)
Front Gross Axle Weight Rating (GAWR), lbs. (kg)	4670 (2118)	4800 (2177)
Rear Gross Axle Weight Rating (GAWR), lbs. (kg)	8550 (3878)	8600 (3901)
Fuel capacity, approximate, gallon (liters)	50 (189)	50 (189)
Seating capacity (front/rear)	3/3	3/3

2. Maximum payload capacity includes weight of driver, passengers, optional equipment and cargo.

2007 Chevrolet Truck Silverado 3500 CC WHEELS
Classic

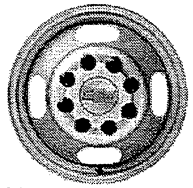	**Wheels**, 6 - 16" x 6.5" (40.6 cm x 16.5 cm) 8-lug painted steel (dual rear), includes painted center caps and steel spare
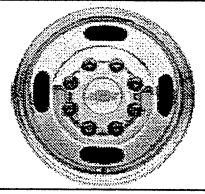	P06 **Wheels**, 6 - 16" x 6.5" (40.6 cm x 16.5 cm) 8-lug steel, with bright metal rings, chrome center caps and steel spare

2007 Chevrolet Truck Silverado 3500 CC RADIOS
Classic

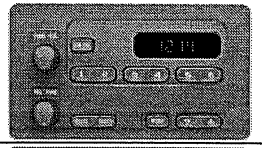	UM7 **Audio system**, AM/FM stereo with seek-and-scan and digital clock
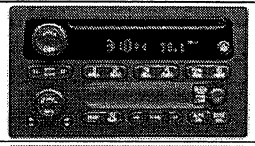	UB0 **Audio system**, AM/FM stereo with CD player, seek-and-scan, digital clock, auto-tone control, Radio Data System (RDS) and speed-compensated volume
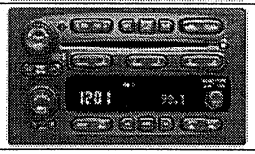	UC6 **Audio system**, AM/FM stereo with 6-disc CD changer, seek-and-scan, digital clock, auto-tone control, Radio Data System (RDS), speed-compensated volume and TheftLock

Option Code	Description
**2	Seat trim, leather
**C	Seat trim, cloth
**D	Seat trim, Custom Cloth
**V	Seat trim, vinyl
2EC	Tires, front and rear (MSRP = $55.00)
4EC	Tire, spare (MSRP = $410.00)
5B5	Power windows and mirrors (MSRP = $738.00)
5G2	Wheels, painted White (MSRP = $55.00)
5G4	Provision for cab roof-mounted lamp (MSRP = $103.00)
5M1	Mirror, exterior, power adjustable, manual folding, non-heated and non-extendable (MSRP = No Charge)
5M9	High level stop lamp (CHMSL) delete (MSRP = No Charge)
5Q1	Tail Lamp delete (MSRP = -$27.00 Credit)
5X7	Provision for body mounted warning lamp (MSRP = $98.00)Provides an instrument panel mounted switch and heavy duty electrical relay with hook-up terminal in the engine compartment for a body upfitter to connect a body mounted warning or emergency lamp. 40 amp nominal rating.
5X9	Provisions, wrecker package (MSRP =$25.00)
5Y0	Provision for body mounted lamp with hook-up wiring (MSRP = $88.00)Provides an instrument panel mounted switch and electrical hook-up behind the cab for a body upfitter to connect a body mounted warning or emergency lamp. 21 amp nominal rating.
5Z5	Hubcap delete (MSRP = -$18.00 Credit)Deletes decorative cap at center of wheel.
6C7	Console, roof with reading lamps (MSRP = $55.00)
6P3	Mirrors, outside rearview, power, non-heated, camper-style. (MSRP = $238.00)
6R2	Mirrors, outside rearview, sail panel mounted wide field of vision, manual adjust, black (MSRP = $250.00)
7Y9	Battery, Single 770 CCA (MSRP = $56.00)
7Z1	Horn, high note (MSRP = $20.00)
8B0	Batteries, 770 CCA with a 600 CCA auxiliary (MSRP = $190.00)
8C6	Alternator, 145 amp (MSRP = $140.00)
8E9	Bumper, front, painted White (MSRP = $45.00)
8F2	Ornamentation, delete (MSRP = No Charge)
8G9	Mirrors, outside, convex combination, stainless steel (MSRP = $278.00)
8H5	Bumper, delete (MSRP = -$145.00 Credit)
8Q3	Rear seat delete (MSRP = -$375.00 Credit)
8R3	Tire valve stems, brass (MSRP = $50.00)Provides brass tire valve stems.
8S3	Backup alarm (MSRP = $103.00)97 decibels back-up alarm.
8V2	Jack and tools delete (MSRP = -$32.00 Credit)
8X1	Label, fasten safety belts (MSRP = $2.00)
8X5	Alternators, dual 105 amp (MSRP =$224.00)
9B4	Fuel fill cap with stainless steel tether Standard dual fuel tanks (MSRP = $30.00) and with RPO (NQZ) Fuel tank delete (MSRP = $15.00)
9D9	Inside rear view mirror delete (MSRP = -$3.00 Credit)
9F2	Mirror, outside delete (MSRP = -$25.00 Credit)
9F7	Mirrors, outside driver and passenger side West Coast type (MSRP = $125.00)Provides large West Coast style mirrors with spring loaded pre-set feature.
9H5	Roof marker lamp delete (MSRP = No Charge)
9L4	Power supply, 12 volt (MSRP = $168.00)
9N8	Mirrors, auxiliary dual spot convex, stainless steel (MSRP = $50.00)
9R0	Sound system, ETR AM/FM stereo with cassette (MSRP = $150.00) with Work Truck and

Option Code	Description
	(MSRP = No Charge) with LS or LT1 Decor
9R3	Sound system, delete (MSRP = No Charge)
9S1	Seats, individual vinyl (MSRP = -$282.00 Credit) on LS Decor and (MSRP = No Charge) on Work Truck Decor
9S1	Seats, front bucket
9U3	Seats, cloth bucket (MSRP = No Charge) with Work Truck and (MSRP = -$282.00) with LS Decor
9U4	Remote keyless entry (MSRP = $170.00)
9V5	Paints, solid (MSRP = No Charge), Woodland Green
9V9	Paints, solid (MSRP = No Charge), Doeskin Tan
9W3	Paints, solid (MSRP = No Charge), Wheatland Yellow
9W4	Paints, solid (MSRP = No Charge), Tangier Orange
A31	Windows, power
A95	Seats, front bucket
AE7	Seats, front 40/20/40 split-bench
AE7	Seats, front 40/20/40 split-bench
AG1	Seat adjuster, driver 6-way power
AJ1	Glass, Solar-Ray deep-tinted
AU0	Remote Keyless Entry
AU3	Door locks, power
B30	Floor covering, color-keyed carpeting
B71	Wheel flares, front only
BG9	Floor covering, Black rubberized-vinyl
C42	Air conditioning delete
C49	Defogger, rear-window
C7L	GVWR, 12,000 lbs. (5443 kg)
C7W	GVWR, 11,400 lbs. (5171 kg)
CJ2	Air conditioning, dual-zone automatic climate control
CJ3	Air conditioning, dual-zone manual climate control
D07	Console, floor
D44	Mirrors, outside manual, Black
DF2	Mirrors, outside high-visibility camper-style, Black
DF5	Mirror, inside rearview auto-dimming
DG5	Mirrors, outside West Coast-type
DK7	Console, overhead mini
DL8	Mirrors, outside heated power-adjustable, Black
DPN	Mirrors, outside heated power-adjustable vertical camper
FE9	Emissions, Federal requirements
G80	Differential, heavy-duty automatic locking rear
GT4	Rear axle, 3.73 ratio
GT5	Rear axle, 4.10 ratio
GTY	Rear axle, wide-track
K05	Engine block heater
K34	Cruise control
K47	Air cleaner, high-capacity
K65	Alternator, dual, 105 amps each
K68	Alternator, 105 amps
KC4	Cooling, external engine oil cooler
KG3	Alternator, 145 amps

2007 Chevrolet Truck Silverado 3500 CC RPO CODES
Classic

Option Code	Description
KL5	Alternative fuel conversions, conversion-ready engine
KNP	Cooling, auxiliary external transmission oil cooler
L18	Engine, Vortec 8.1L V8 SFI
LBZ	Engine, Duramax 6.6L Turbo Diesel V8
LQ4	Engine, Vortec 6.0L V8 SFI
MT1	Transmission, 4-speed automatic, heavy-duty
MW3	Transmission, 5-speed manual
MW7	Transmission, Allison 1000 6-speed automatic
NB8	Emissions override
NC7	Emissions override, Federal
NE1	Emissions, Maine, Massachusetts, New York or Vermont state requirements
NP1	Transfer case, electronic shift
NP2	Transfer case, floor-mounted shifter
NP5	Steering wheel, leather-wrapped, Black
NQZ	Fuel tank delete, rear
NZZ	Skid Plate Package
P06	Wheels, 6 - 16" x 6.5" (40.6 cm x 16.5 cm) 8-lug steel
PDB	OnStar Plus Package
PDN	Heavy-Duty Power Package
R6Q	OnStar Plus Package discount not desired
R6Y	Heavy-Duty Power Package discount not desired
R8G	OnStar 1 Additional Year of Safe and Sound Service (MSRP= $199)
R8P	OnStar 2 Additional Years of Safe and Sound Service (MSRP=$379)
R8U	OnStar 3-Years Safe and Sound Service (MSRP=$679)
R8V	OnStar 3-Years Directions and Connections Service (MSRP=$979)
R8W	OnStar 1-Year Directions and Connections Service (MSRP=$100)
R8Y	OnStar 2-Years Directions and Connections Service (MSRP=$399)
R8Z	OnStar 3-Years Directions and Connections Service (MSRP=$679)
RFA	OnStar 1-Year Business Vehicle Manager Service (MSRP=$25)
RFB	OnStar 2-Years Business Vehicle Manager Service (No charge)
RFC	OnStar 3-Years Business Vehicle Manager Service (No Charge)
T96	Fog lamps, front
TGK	Solid PaintSEO solid paint, one color
TP2	Battery, auxiliary heavy-duty 600 cold-cranking amps
TQ3	Battery, heavy-duty dual 770 cold-cranking amps
TR3	Grille, color-keyed surround with chrome accent bar
TS9	Lamp delete, LED center high-mounted stop/brake (CHMSL) delete and cargo area, delete
U01	Lamps, Amber roof marker
U2K	XM Satellite Radio
UB0	Audio system, AM/FM stereo with CD player
UC6	Audio system, AM/FM stereo with 6-disc CD changer
UE1	OnStar, 1-year of Safe and Sound plan
UK3	Steering wheel controls, mounted audio and Driver Information Center controls
UM7	Audio system, AM/FM stereo
UQ3	Audio system feature, speaker system
UQ5	Audio system feature, 4-speaker system
UQ7	Audio system feature, Bose premium speaker system
V10	Covers, radiator grille and front bumper openings
V76	Recovery hooks, front, frame-mounted

2007 Chevrolet Truck Silverado 3500 CC RPO CODES
Classic

Option Code	Description
VAB	Ship Thru for Models C*36**3 (MSRP = $165.00)Produced in Pontiac Assembly and shipped to NBC Truck Equipment
VAY	Ship Thru for Models C*36**3 (MSRP = $165.00)Produced in Pontiac Assembly and shipped to K&B Mounting
VBK	Ship Thru for Models C*36**3 (MSRP = $270.00) Produced in Pontiac Assembly and shipped to Ft. Wayne Fleet Equipment
VFI	Ship Thru for TDM Vehicle Management (MSRP = $165.00)
VG3	Bumper, front chrome with Gray lower
VGH	Ship Thru for Models C*36**3 (MSRP = $160.00) Produced in Pontiac Assembly and shipped to Monroe Truck Equipment
VGZ	Ship Thru for Models C*360*3 and CK36403 (MSRP = $165.00)Produced in Pontiac Assembly and shipped to Canfield
VWS	Ship Thru for Models C*36**3 (MSRP = $310.00)Produced in Pontiac Assembly and shipped to Buckeye Truck Equipment
VYC	Ship Thru for Models C*36**3 (MSRP = $160.00) Produced in Pontiac Assembly and shipped to Knapheide Truck Equipment
VYS	Ship Thru for Models C*360*3 and CK36403 (MSRP = $165.00) Produced in Pontiac Assembly and shipped to Masterack Truck Equipment
VYU	Snow Plow Prep Package
XEC	Tires, LT215/85R16E all-season, blackwall
XEF	Tires, LT215/85R16E on-/off-road, blackwall
XYK	Tires, LT215/85R16D all-season, blackwall
YF2	Ambulance Package
YF5	Emissions, California state requirements
Z85	Suspension Package, Handling/Trailering, heavy-duty
ZEC	Tire, spare LT215/85R16E all-season, blackwall
ZEF	Tire, spare LT215/85R16E all-season, blackwall
ZW9	Body, Chassis Cab
ZY1	Paint, solid
ZYK	Tire, spare LT215/85R16D all-season, blackwall

Updates for Silverado 3500 CC Classic

Week of 7/31/2006

Effective 7/31/2006, the following changes will be made to the Vehicle Order Guide:

- Mechanical section-(MW7) Transmission, Allison 1000 6-speed automatic, changed extended description to read "electronically controlled with overdrive, electronic engine grade braking and tow/haul mode. Includes (KNP) external transmission oil cooler. Also, includes provisions to assist with an "aftermarket" PTO installation. These provisions allow your Dealership to install an interface harness and PTO Switch that mounts on the IP. This switch and interface harness is only available via GMSPO and is not installed at assembly. Once installed by your Dealership, it will enable your PTO controls to interface with vehicle electronic systems. (NOTE: PTO content not included if (YF2) Ambulance Package is ordered)".

Week of 7/17/2006

Effective 7/17/2006, the following changes will be made to the Vehicle Order Guide:

- Interior section-Air bags, frontal, changed footnote #1 to read "Never place a rear-facing infant restraint in the front seat of any vehicle equipped with an active frontal air bag. Always use safety belts and the correct child restraints for your child's age and size. Children are safer when properly secured in a rear seat. See the vehicle's Owner's Manual and child safety seat instructions for more safety information.".

Week of 7/10/2006

Effective 7/10/2006, the following changes will be made to the Vehicle Order Guide:

- SEO Ship Thru section- (5B5) Power windows and mirrors, Updated extended description to read "Provides power driver and passenger windows on a base trim level, includes SEO (5M1) LH and RH outside power adjustable, manual folding, non-heated, non-extendable mirrors and up level door panels. The mirror head is the same size and configuration as the base power mirror on LT Décor.".
- SEO Ship Thru section- (5M1) Updated main description to read "Mirror, exterior, power adjustable, manual folding, non-heated and non-extendable". Added extended description to read "Provides the left and right hand side outside power adjustable, manual folding, non-heated, non-extendable, rear view mirrors that are included with SEO (5B5) Power windows and mirrors. Mirror head is the same size and configuration as the base mirror supplied on first tire Uplevel Décors except that the mirror head is not heated and not extendable.".

Week of 7/3/2006

Effective 7/3/2006, the following changes will be made to the Vehicle Order Guide:

- SEO/Ship Thru section-(6P3) Mirrors, outside rearview, power, non-heated, camper-style. Updated price to "(MSRP = $238.00)"

Week of 6/19/2006

Effective 6/19/2006, the following changes will be made to the Vehicle Order Guide:

- All sections-removed the hundred designation (ex: 5300) from all engine descriptions and replaced it with liters designation (ex: 5.3L). Please review entire order guide to see where it changed.

Week of 5/29/2006

Effective 5/29/2006, the following changes will be made to the Vehicle Order Guide:

- Mechanical section-(VYU) Snow Plow Prep Package, changed extended description to read "includes 10-amp power for backup and roof emergency light, (KG3) 145-amp alternator, high-flow front bumper, forward lamp wiring harness, 1.65" (42 mm) access hole with grommet in front of dash panel, roof beacon lamp provisions with switch on the instrument panel, instrument panel jumper wiring harness for electric trailer brake controller, (K47) high-capacity air cleaner and (NZZ) Skid Plate Package".
- SEO Ship Thru section-(9F2) Mirror, outside delete, changed footnote 1 to read "Requires a Fleet sales order. Not

available with SEO (5B5) Power windows and mirrors."

- SEO Ship Thru section-(9N8) Mirrors, auxiliary dual spot convex, stainless steel, changed footnote 1 to read "Requires SEO (9F7) outside West Coast-type mirrors. Not available with SEO (5B5) Power windows and mirrors."
- SEO Ship Thru section-(8G9) Mirrors, outside, convex combination, stainless steel, added footnote 1 to read "Not available with SEO (5B5) Power windows and mirrors:" and it applies to 1WT and 1LS.
- SEO Ship Thru section-(9F7) Mirrors, outside driver and passenger side West Coast type, added footnote 1 to read "Not available with SEO (5B5) Power windows and mirrors." and it applies to 1WT and 1LS.
- SEO Ship Thru section-(VGR) Ship Thru for Models C*36003, C*36403, and C*36053 (MSRP = $505.00) Produced in Pontiac Assembly and shipped to OEM Systems (in Centreville, IL) and onto Wentzville Assembly Center, Delete Option Entirely.

Week of 5/22/2006

Effective 5/22/2006, the following changes will be made to the Vehicle Order Guide:

- OnStar Fleet Options section-please review entire section as many changes have been made.

Week of 5/15/2006

Effective 5/15/2006, the following changes will be made to the Vehicle Order Guide:

- SEO Ship Thru section-(VFI) Ship Thru for TDM Vehicle Management, updated price to "(MSRP = $140.00)".
- SEO Ship Thru section-Added (VGR) Ship Thru for Models C*36003, C*36403, and C*36053, updated price to "(MSRP = $505.00)".

Week of 4/24/2006

Effective 4/24/2006, the following changes will be made to the Vehicle Order Guide:

- Interior section-(CJ3) Air conditioning, dual-zone manual climate control, changed symbol from "A1" to "S" in 1WT column. Also, changed footnote #1 to read "Required and only available when (VYU) Snow Plow Prep Package is ordered.". Also, changed symbol from "A2" to "A1" on 2LT column. Also, deleted footnote #2 entirely.
- Interior section-(C42) Air conditioning delete, changed symbol from "S1" to "A1". Also moved RPO from Reference Only column to Free Flow column.
- Interior section-(U2K) XM Satellite Radio, changed extended description to read " With a wide variety of programming, XM has something to excite any driver. Whether you want to be entertained or informed, to laugh, think, or sing, XM has the perfect channel for you - coast-to-coast, and in digital-quality sound. 3 trial months - no obligation". Also, changed footnote to read "Available in the 48 contiguous United States. Required $12.95 monthly subscription sold separately. All fees and programming subject to change. Subscription subject to customer agreement. For more information, visit gm.xmradio.com.".

Week of 4/17/2006

Effective 4/17/2006, the following changes will be made to the Vehicle Order Guide:

- Interior section-(UC6) Audio system, AM/FM stereo with 6-disc CD changer, changed extended description to read " seek-and-scan, digital clock, auto-tone control, Radio Data System (RDS), speed-compensated volume, and TheftLock". Also, changed symbol from "A1" to "A" in 1LT column and deleted footnote #1 entirely.

Week of 4/10/2006

Effective 4/10/2006, the following changes will be made to the Vehicle Order Guide:

- Mechanical section-(MW7) Transmission, Allison 1000 6-speed automatic, changed extended description to read "electronically controlled with overdrive, electronic engine grade braking and tow/haul mode. Includes (KNP) external transmission oil cooler. Also, includes PTO engine speed and PTO controls (wiring, switch(es) indicator light(s), PCM), PTO chassis and body provisions (exhaust pipes and body floor cutout parts. (NOTE: PTO content not included if (YF2) Ambulance Package is ordered)". Also, changed footnote #2 to read "Requires (L18) Vortec 8100 V8 SFI engine or (LBZ) Duramax 6600 Turbo Diesel V8 engine. Required with (YF2) Ambulance Package. PTO content not included if (YF2)

Ambulance Package is ordered.".

Week of 4/3/2006

Effective 4/3/2006, the following changes will be made to the Vehicle Order Guide:

- Interior section-(CJ3) Air conditioning, dual-zone manual climate control, changed symbol from "S" to "A1" in 1WT column. Also, changed footnote #1 to read "Standard on Extended Cab Models.". Also, added footnote #2 that reads "Required and only available when (VYU) Snow Plow Prep Package is ordered." and applies to 2LT column.
- Interior section-(C42) Air conditioning delete, changed symbol from "A1" to "S1". Also moved RPO from Free Flow column to Reference only column.